United States Patent [19]

Frederiksen

[11] **Patent Number: 4,475,172**

[45] **Date of Patent: Oct. 2, 1984**

[54] **AUDIO/VISUAL HOME COMPUTER AND GAME APPARATUS**

[75] Inventor: **Jeffrey E. Frederiksen,** Arlington Heights, Ill.

[73] Assignee: **Bally Manufacturing Corporation,** Chicago, Ill.

[21] Appl. No.: **274,864**

[22] Filed: **Jun. 18, 1981**

Related U.S. Application Data

[60] Division of Ser. No. 910,964, May 30, 1978, Pat. No. 4,301,503, which is a continuation-in-part of Ser. No. 812,662, Jul. 5, 1977, Pat. No. 4,296,930, which is a continuation of Ser. No. 635,406, Nov. 26, 1975, abandoned.

[51] **Int. Cl.**[3] **G06F 3/16**

[52] **U.S. Cl.** **364/900**

[58] **Field of Search** ..... 340/723, 724, 725, 726, 340/727; 364/200, 900; 84/DIG. 6, DIG. 8, DIG. 23

[56] **References Cited**

U.S. PATENT DOCUMENTS

Re. 28,507	8/1975	Rauch et al. .
Re. 28,598	10/1975	Baer et al. .
1,180,470	6/1959	Feyzeau et al. .
2,455,922	12/1948	Goldsmith et al. .
2,595,646	5/1952	Doba et al. .
2,847,661	8/1958	Althouse .
3,017,625	1/1962	Evans et al. .
3,046,676	7/1962	Hermann et al. .
3,122,607	2/1964	Balding .
3,135,815	6/1964	Spiegel .
3,345,458	10/1967	Cole et al. .
3,388,391	6/1968	Clark .
3,422,420	1/1969	Clark .
3,435,136	3/1969	Bachmann et al. .
3,462,639	8/1969	French .
3,497,760	2/1970	Kiesling .
3,569,617	3/1971	Allen et al. .
3,577,130	5/1971	Rice et al. .
3,583,538	6/1971	Hurley .
3,585,628	6/1971	Harrison .
3,631,457	12/1971	Hamada et al. .
3,657,716	4/1972	Ambrico .
3,659,284	4/1972	Rusch .
3,659,285	4/1972	Baer et al. .
3,685,039	8/1972	Flanagan .
3,716,842	2/1973	Belady et al. .
3,725,563	4/1973	Woycechowsky .
3,728,840	4/1973	Baer .
3,736,411	5/1973	Berndt .
3,747,087	7/1973	Harrison et al. .
3,760,375	9/1973	Irwin et al. .

(List continued on next page.)

OTHER PUBLICATIONS

"Illustrations of Computer Powers", Computers and Automation, Sep. 1954, vol. 3, No. 7, p. 26.

"On the Demonstration of High-Speed Digital Computers," Bauer, et al., Tour of the Assoc. for Computing Machinery, vol. 1, No. 4, Oct. 1954, pp. 177-182.

Computers and Automation, Feb. 1957, vol. 6, No. 2, pp. 8-9.

"The Design and Use of Electronic Analogue Computers", Gilbert, 1964, pp. 471-473.

"Electronic Information Displays for Management," Howard, 1966, pp. 22, 33-35, 47.

"Looking Ahead," Lachenbruch, TV Guide, Apr. 13, 1968, pp. 8-12.

Software Newsletter, vol. II, Apr. 1969, of Systems Engineering Laboratories, Title page and Preceding page.

"Games Computers Play," Popular Science, Oct. 1970, p. 44.

(List continued on next page.)

Primary Examiner—Thomas M. Heckler

Attorney, Agent, or Firm—Welsh & Katz, Ltd.

[57] **ABSTRACT**

A home computer system provides a video processor for use with a television receiver. The video processor can selectively perform a variety of modifications to pixel data under the direction of the CPU of the computer system before the pixel data is stored in a random access memory to effectively increase the speed or data handling power of the system.

24 Claims, 168 Drawing Figures

U.S. PATENT DOCUMENTS

3,766,313	10/1973	Carlson et al. .	
3,774,669	11/1973	Ariano et al. .	
3,778,058	12/1973	Rausch .	
3,789,200	1/1974	Childress et al. .	
3,793,483	2/1974	Bushnell .	
3,809,395	1/1974	Allison et al. .	
3,809,868	5/1974	VillaLobo et al. .	
3,812,485	5/1974	Moreton .	
3,822,363	7/1974	Moyer et al. .	
3,826,864	7/1974	Paufve .	
3,872,446	3/1975	Chambers .	
3,874,669	4/1975	Ariano et al. .	
3,895,183	7/1975	Collier .	
3,899,662	8/1975	Kreeger et al. .	
3,906,197	9/1975	Grover .	
3,911,597	10/1975	Millard et al. .	
3,921,161	11/1975	Baer .	
3,936,664	2/1976	Sato .	
3,949,375	4/1976	Ciarlo .	
3,955,189	5/1976	Thomson .	
3,973,244	8/1976	Lovercheck et al. .	
3,978,470	8/1976	McQuire .	
3,980,992	9/1976	Levy et al. .	
3,996,585	12/1976	Hogan et al. .	
4,011,546	3/1977	Kawata et al. .	
4,026,555	5/1977	Kirschner et al. .	
4,034,990	7/1977	Baer .	
4,043,983	7/1977	Dash et al. .	
4,053,740	10/1977	Rosenthal .	
4,070,710	1/1978	Sukonick et al.	364/900
4,089,524	5/1978	Hauck .	
4,093,221	6/1978	Dash .	
4,112,422	7/1978	Mayer et al. .	
4,116,444	9/1978	Mayer et al. .	
4,142,180	2/1979	Burson .	
4,177,462	12/1979	Chung .	
4,296,930	10/1981	Fredericksen .	
4,301,503	11/1981	Frederiksen .	

OTHER PUBLICATIONS

"II Cybernetic Frontiers" Brand, Random House, 1974, pp. 54–60.

"Space War", Kuhfeld, Analog Science Friction/-Science Fact, pp. 67–79.

Gun Flight Computer Service Manual for the Midway 8080 Microprocessor Game Series, 1976.

Standardized Test Procedure for Midway's Processor Boards, Jul. 1976.

Marcus, A., "A Prototype Computerized Page-Design System", Visible Language, vol. 5, Summer, 1971.

Noll, A. M., "A Computer Technique for Displaying n-Dimensional Hyper Objects", Comm. of the ACM., vol. 10, 8/67.

Kolb, E. R., "Computer Printing Forecast for the 70's", Datamation, 12/1/70.

Andersson, P. L., "Phototypesetting-A Quiet Revolution", Datamation, 12/1/70.

Bonsiepe, G., "A Method of Quantifying Order in Typographic Design", The Journ. of Typographic Research, 7/68.

Sutherland, I. E., et al., "A Characterization of Ten Hidden-Surface Algorithms", Computing Surveys, vol. 6, 3/74.

Bell Lab Record, vol. 47, 5 & 6/69.

Newell, M. E., et al., "A Solution to the Hidden Surface Problem", Proceedings of ACM Nat. Conf., 1972.

Gelernter, H. L., et al., "An Advanced Computer-Based Nuclear Physics Data Acquisition System," Nuclear Instruments and Method, 9/67.

Knowlton, K. C., "A Comp. Technique for Providing Animated Movies", Proceedings AFIPS, 1964, SJCC, vol. 25.

Ophir, D., et al., "Brad: The Brookhaven Raster Display", Comm. of the ACM, vol. 11, 6/68.

Mermelstein, P., "Comp.-Generated Spectogram Displays for On-Line Speech Research", IEEE Transactions on Audio and Electroacoustics, 3/71.

Denes, P. B., "Computer Graphics in Color", Bell Lab. Record, vol. 52, 5/74.

Noll, A. M., "Scanned-Display Computer Graphics", Comm. of the ACM, vol. 14, 3/71.

Kajiya, J. T. et al., "A Random-Access Video Frame Buffer", Proc. of the Conf. on Comp. Graphics, Pattern Recognition, and Data Struc., 5/14-16-75.

Denes, P. B., "A Scan-Type Graphics System for Interactive Computing," Proc. of Conf. on Comp. Graphics, Pattern Recog., and Data Struc., 5/14-16-75.

Andersson, P. L., "Phototypesetting-A Quiet Revolution," Datamation, Dec., 1970, pp. 22–27.

Noll, A. M., "Scanned Display Computer Graphics," Communications of the ACM, vol. 14, Mar., 1971, pp. 143–150.

Katjiya, J. T, Sutherland, I. E., and Cheadle, E. C., "A Random Access Video Frame Buffer," Proc. of the Conf. on Comp. Graphics Pattern Recognition & Data Structure, May, 1975, pp. 1–6.

Denes, P. B., "A Scan-Type Graphics System for Interactive Computing," Proc. of the Conf. on Comp. Graphics, Pattern Recognition & Data Structure, May, 1975, pp. 21–24.

Fig. 1.

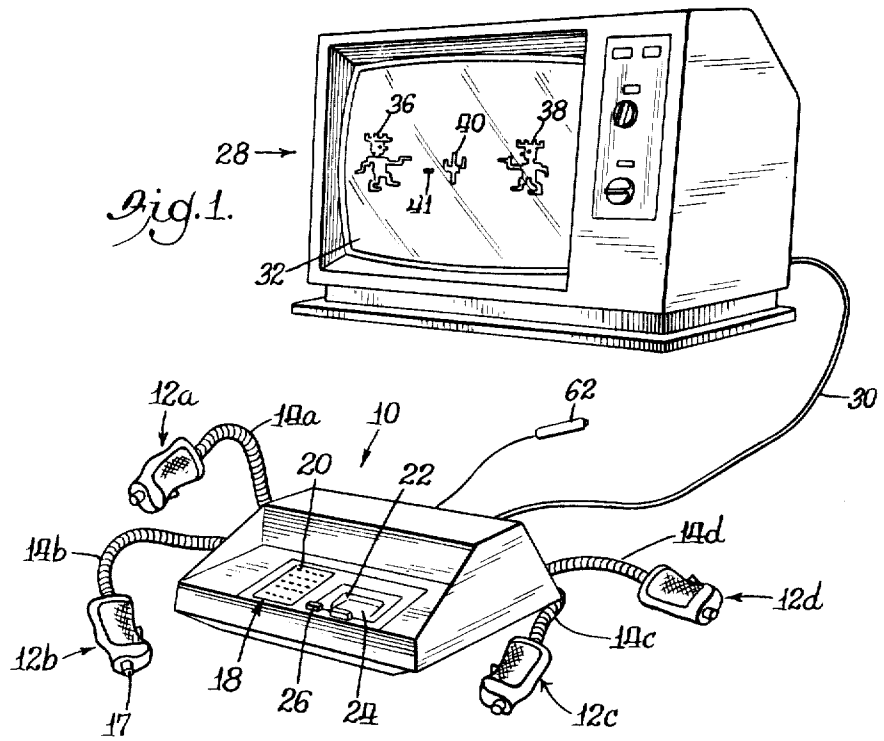
28
36
40
38
41
32
12a
14a
10
62
30
20
22
14b
14d
12d
12b
14c
18
26
24
12c
17

Fig. 2.

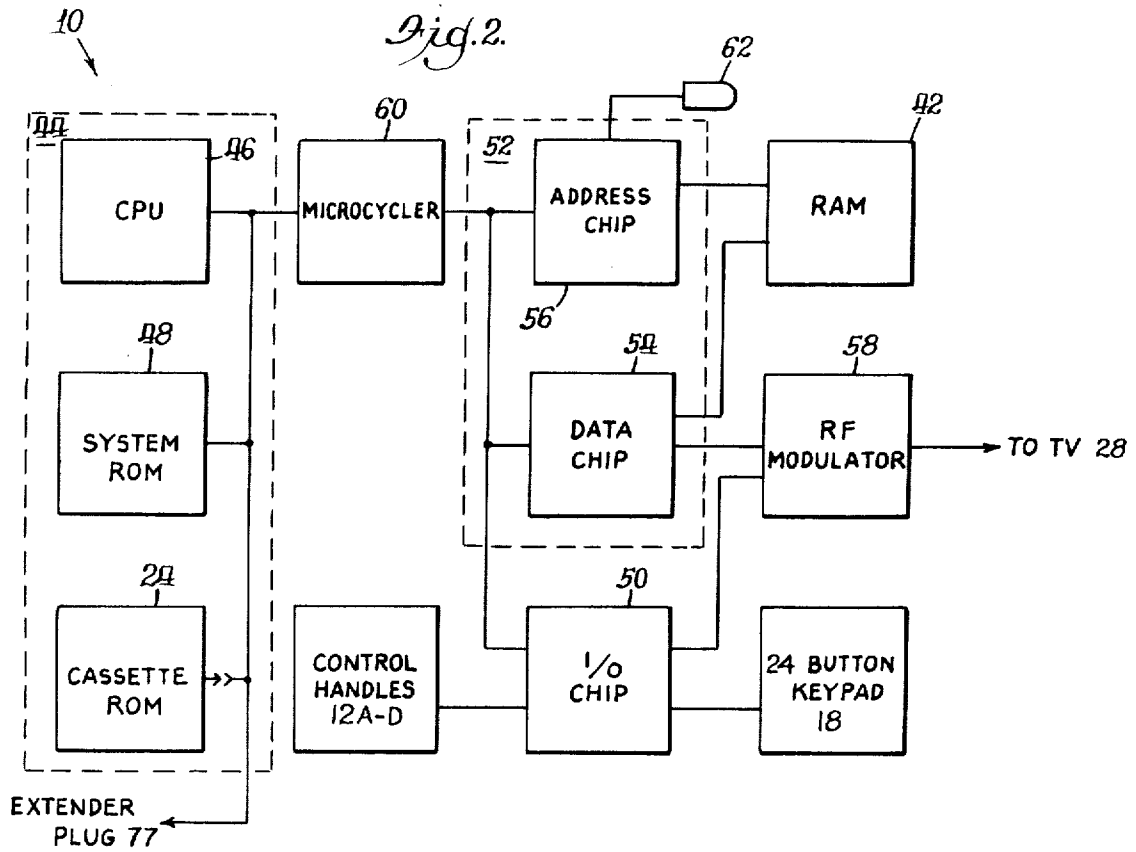
10
62
44
60
52
42
CPU
46
MICROCYCLER
ADDRESS CHIP
RAM
56
48
54
58
SYSTEM ROM
DATA CHIP
RF MODULATOR
TO TV 28
24
50
CASSETTE ROM
CONTROL HANDLES 12A-D
I/O CHIP
24 BUTTON KEYPAD 18
EXTENDER PLUG 77

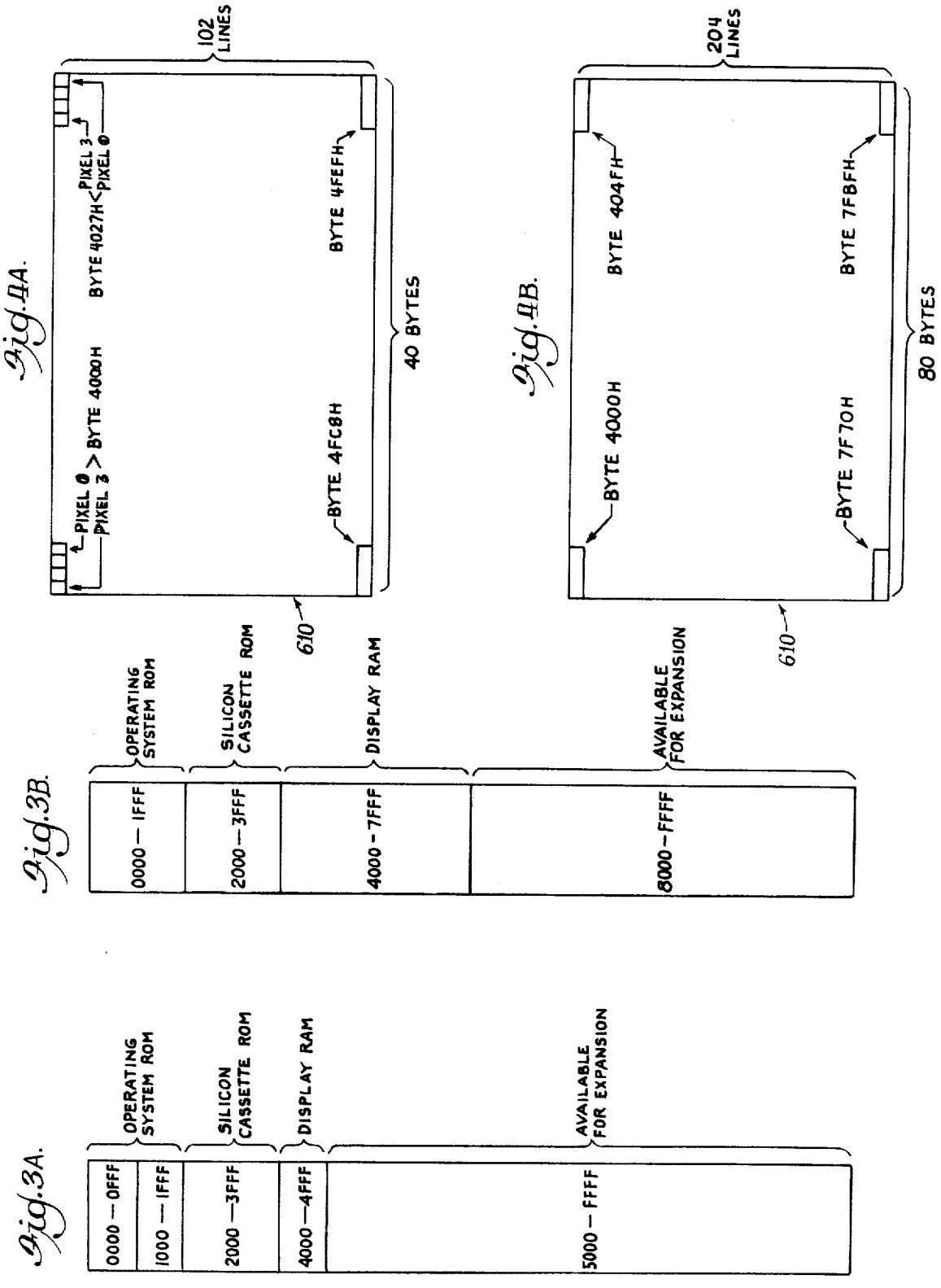
Fig. 3A.
0000 — 0FFF
1000 — 1FFF
2000 — 3FFF
4000 — 4FFF
5000 — FFFF
OPERATING SYSTEM ROM
SILICON CASSETTE ROM
DISPLAY RAM
AVAILABLE FOR EXPANSION
Fig. 3B.
0000 — 1FFF
2000 — 3FFF
4000 - 7FFF
8000 - FFFF
OPERATING SYSTEM ROM
SILICON CASSETTE ROM
DISPLAY RAM
AVAILABLE FOR EXPANSION
Fig. 4A.
102 LINES
PIXEL 0
PIXEL 3
BYTE 4000H
BYTE 4027H
PIXEL 3
PIXEL 0
BYTE 4FEFH
BYTE 4FC8H
40 BYTES
610
Fig. 4B.
204 LINES
BYTE 4000H
BYTE 404FH
BYTE 7F70H
BYTE 7FBFH
80 BYTES
610

Fig.5.

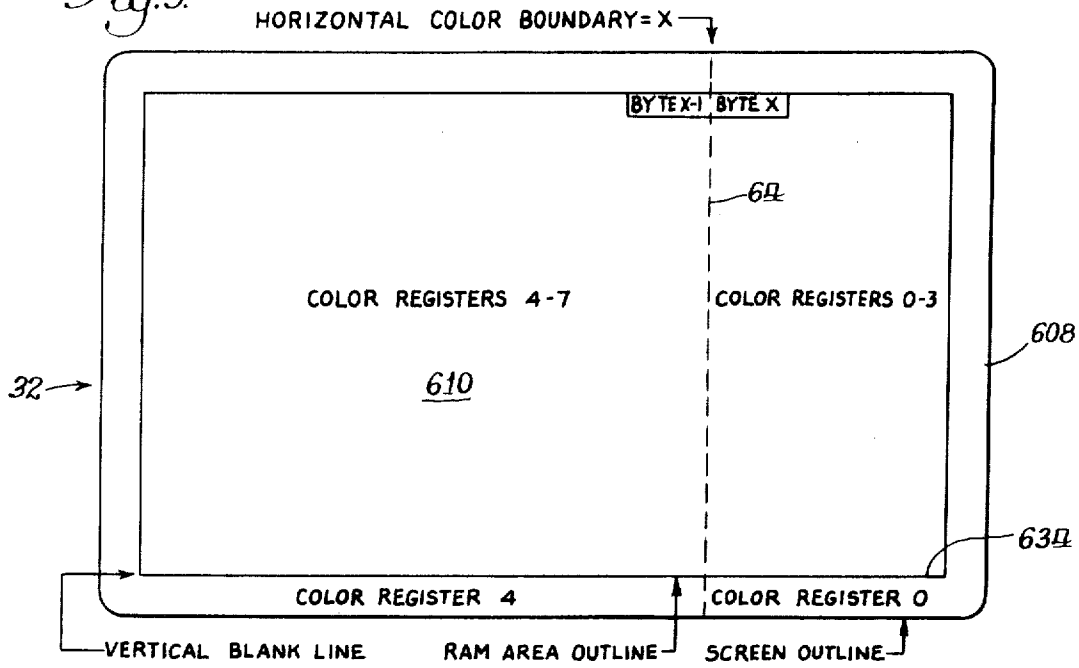
HORIZONTAL COLOR BOUNDARY=X
BYTE X-1
BYTE X
614
COLOR REGISTERS 4-7
COLOR REGISTERS 0-3
610
608
32
634
COLOR REGISTER 4
COLOR REGISTER 0
VERTICAL BLANK LINE
RAM AREA OUTLINE
SCREEN OUTLINE

Fig.6.

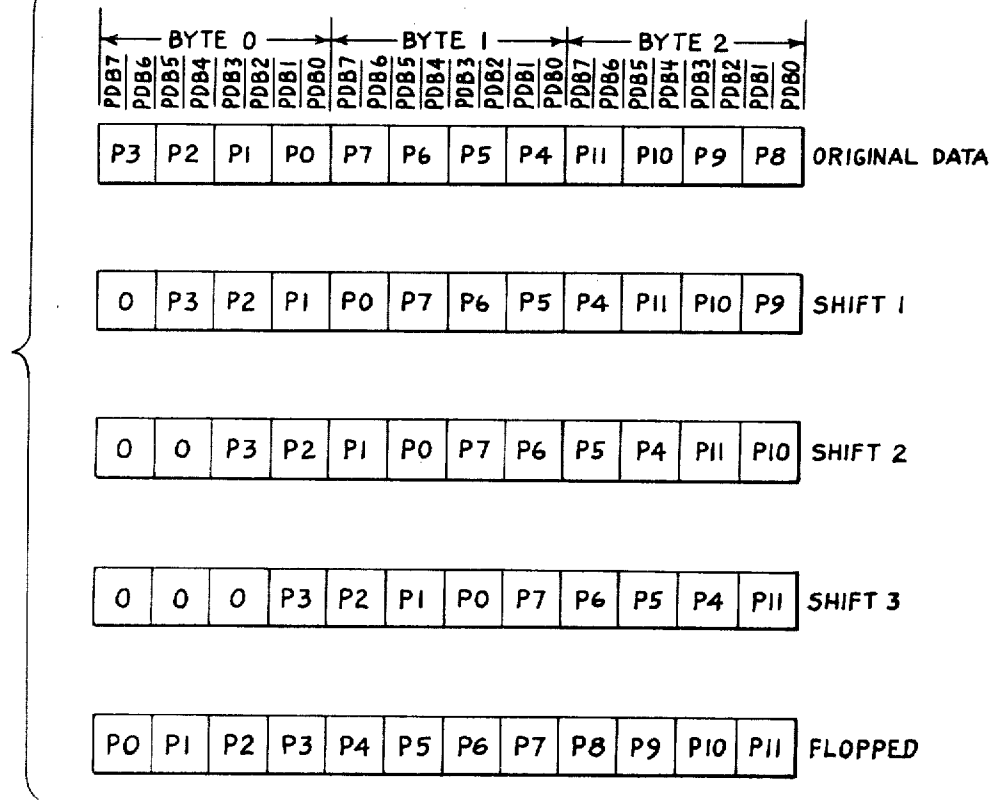
BYTE 0
BYTE 1
BYTE 2
PDB7 PDB6 PDB5 PDB4 PDB3 PDB2 PDB1 PDB0 PDB7 PDB6 PDB5 PDB4 PDB3 PDB2 PDB1 PDB0 PDB7 PDB6 PDB5 PDB4 PDB3 PDB2 PDB1 PDB0
P3 P2 P1 P0 P7 P6 P5 P4 P11 P10 P9 P8 ORIGINAL DATA
0 P3 P2 P1 P0 P7 P6 P5 P4 P11 P10 P9 SHIFT 1
0 0 P3 P2 P1 P0 P7 P6 P5 P4 P11 P10 SHIFT 2
0 0 0 P3 P2 P1 P0 P7 P6 P5 P4 P11 SHIFT 3
P0 P1 P2 P3 P4 P5 P6 P7 P8 P9 P10 P11 FLOPPED

Fig. 8.

PORT	7	6	5	4	3	2	1	0	← BIT	
10H				TRIG	RIGHT	LEFT	DOWN	UP		PLAYER 1
11H				TRIG	RIGHT	LEFT	DOWN	UP		PLAYER 2
12H				TRIG	RIGHT	LEFT	DOWN	UP		PLAYER 3
13H				TRIG	RIGHT	LEFT	DOWN	UP		PLAYER 4
14H			=	+	−	×	÷	%		KEYPAD
15H								↓		KEYPAD
16H			0	2	5	8	MS	↑		KEYPAD
17H			CE	1	4	7	MR	C		KEYPAD
1CH	← POT →									PLAYER 1
1DH	← POT →									PLAYER 2
1EH	← POT →									PLAYER 3
1FH	← POT →									PLAYER 4

Fig. 7A.

PDB7	PDB6	PDB5	PDB4	PDB3	PDB2	PDB1	PDB0	BYTE
P3	P2	P1	P0					0
P7	P6	P5	P4					1
P11	P10	P9	P8					2
P15	P14	P13	P12					3

ORIGINAL

Fig. 7B.

PDB7	PDB6	PDB5	PDB4	PDB3	PDB2	PDB1	PDB0	BYTE
P15	P11	P7	P3					0
P14	P10	P6	P2					1
P13	P9	P5	P1					2
P12	P8	P4	P0					3

ROTATED

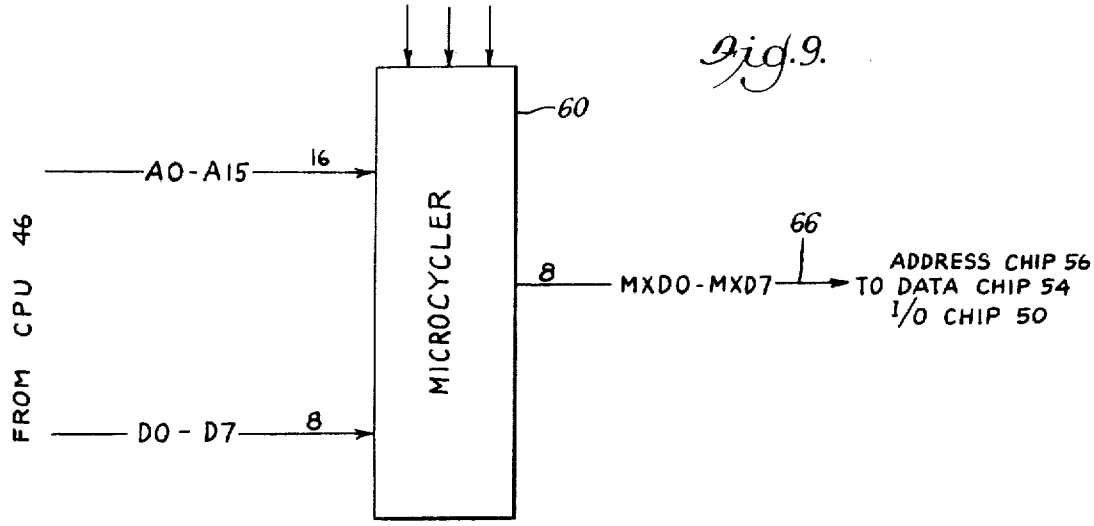
60
A0-A15
16
FROM CPU 46
D0 - D7
8
MICROCYCLER
66
8
MXD0-MXD7
ADDRESS CHIP 56
TO DATA CHIP 54
I/O CHIP 50

Fig. 9.

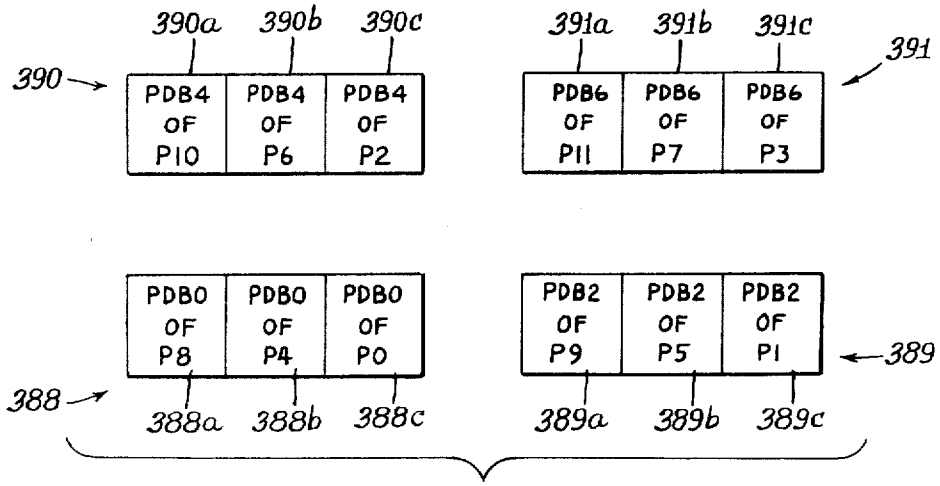
390
390a
390b
390c
PDB4 OF P10
PDB4 OF P6
PDB4 OF P2
391a
391b
391c
391
PDB6 OF P11
PDB6 OF P7
PDB6 OF P3
388
PDB0 OF P8
PDB0 OF P4
PDB0 OF P0
388a
388b
388c
PDB2 OF P9
PDB2 OF P5
PDB2 OF P1
389
389a
389b
389c

Fig. 10.

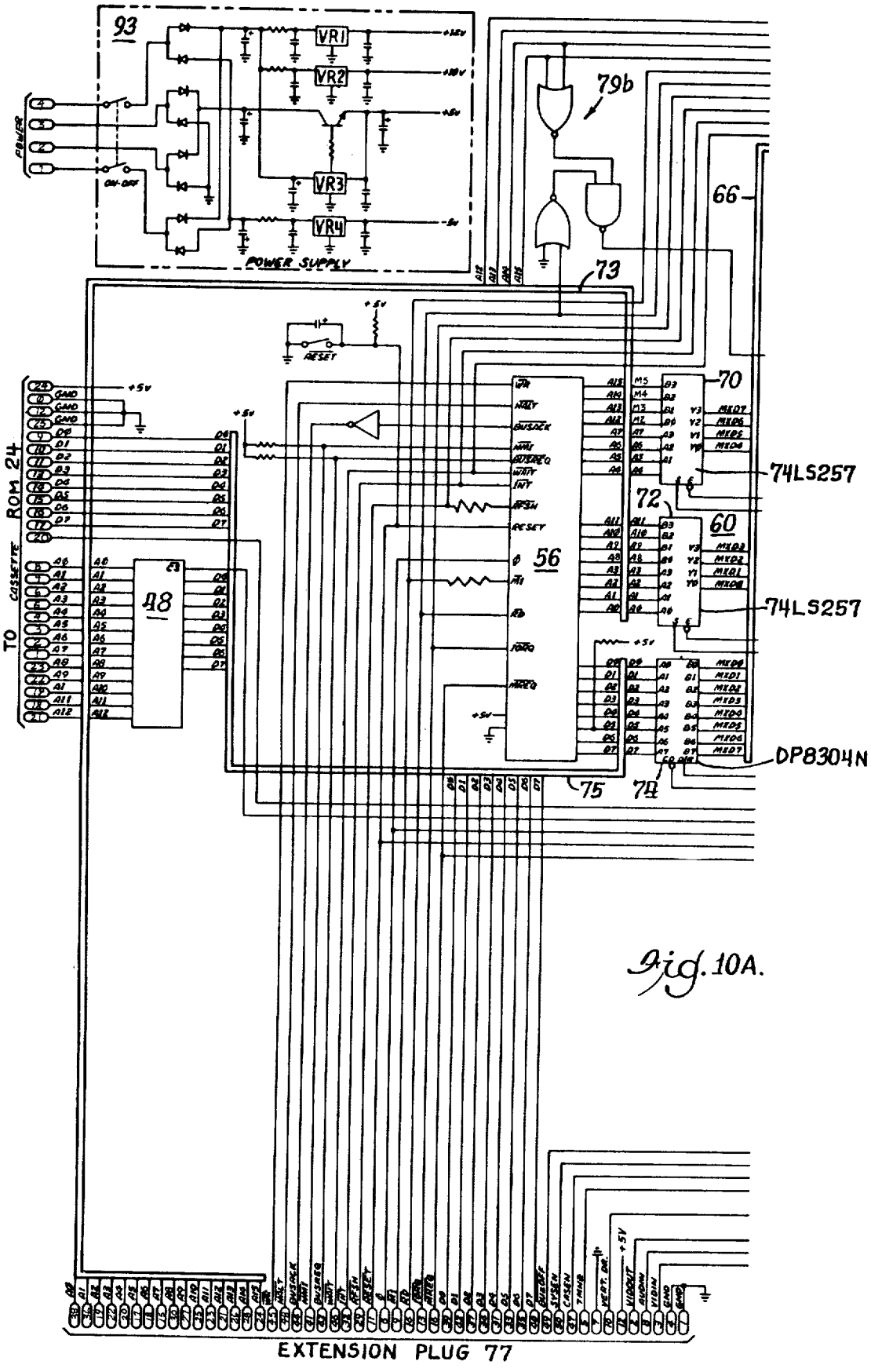
93
VR1
VR2
VR3
VR4
POWER SUPPLY
79b
66
73
70
74LS257
72
60
74LS257
56
48
TO CASSETTE ROM 24
DP8304N
75
74
EXTENSION PLUG 77

Fig. 10A.

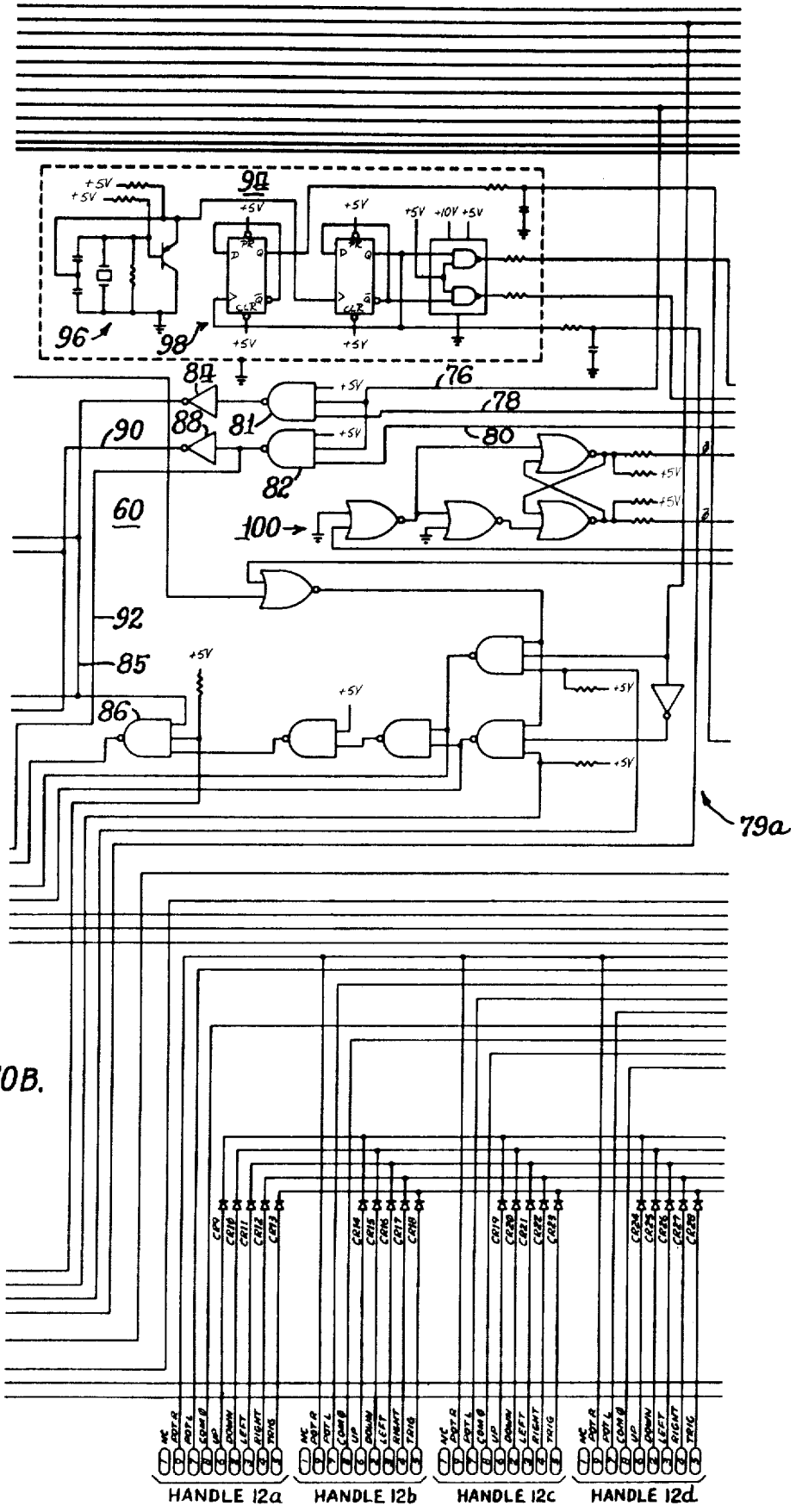
94
96
98
84
88
81
82
76
78
80
90
60
100
92
85
86
79a
HANDLE 12a
HANDLE 12b
HANDLE 12c
HANDLE 12d

Fig. 10B.

Fig. 10C.

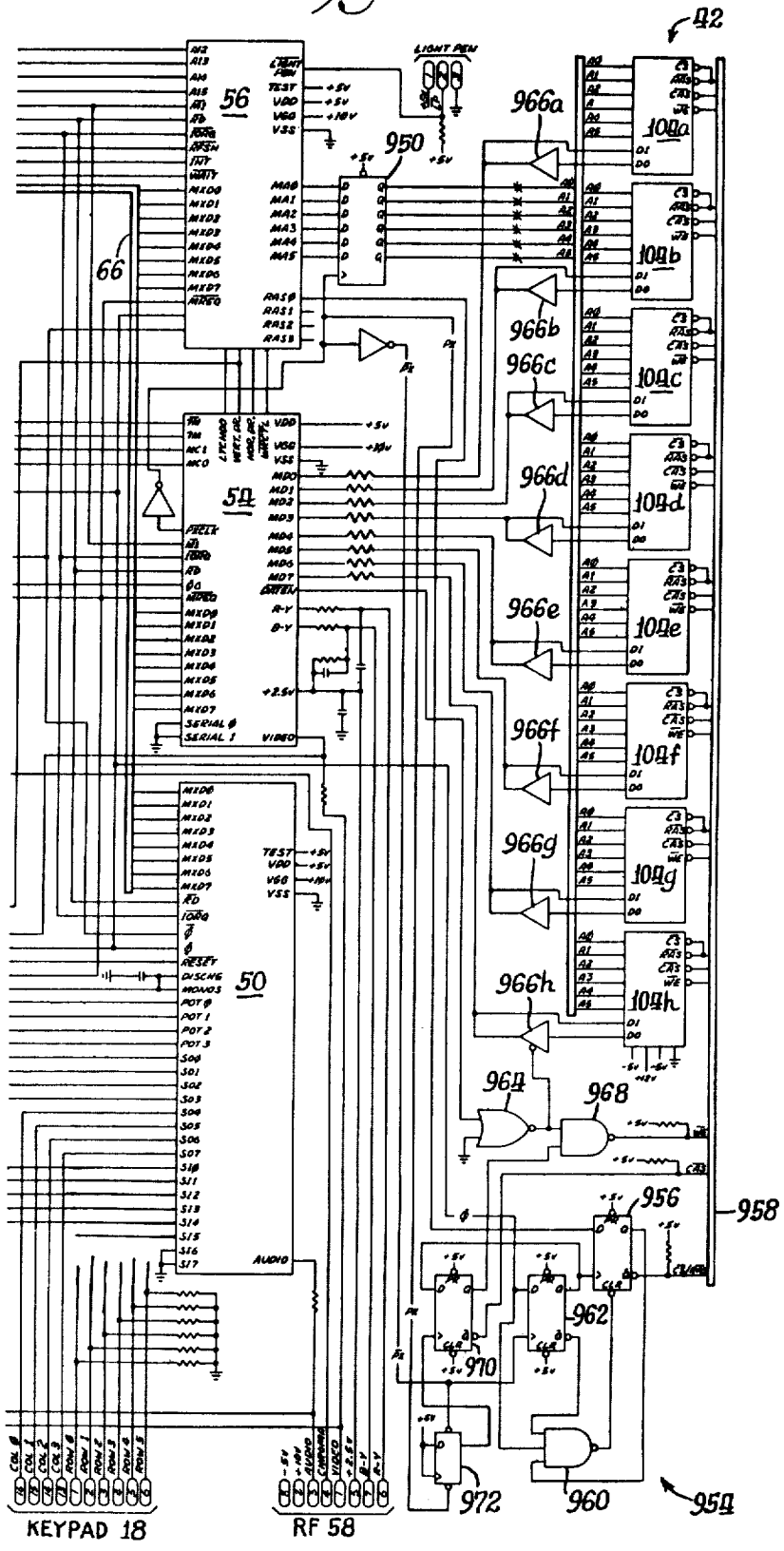
42
56
66
950
966a
966b
966c
966d
966e
966f
966g
966h
104a
104b
104c
104d
104e
104f
104g
104h
54
50
964
968
956
958
962
970
972
960
954
KEYPAD 18
RF 58

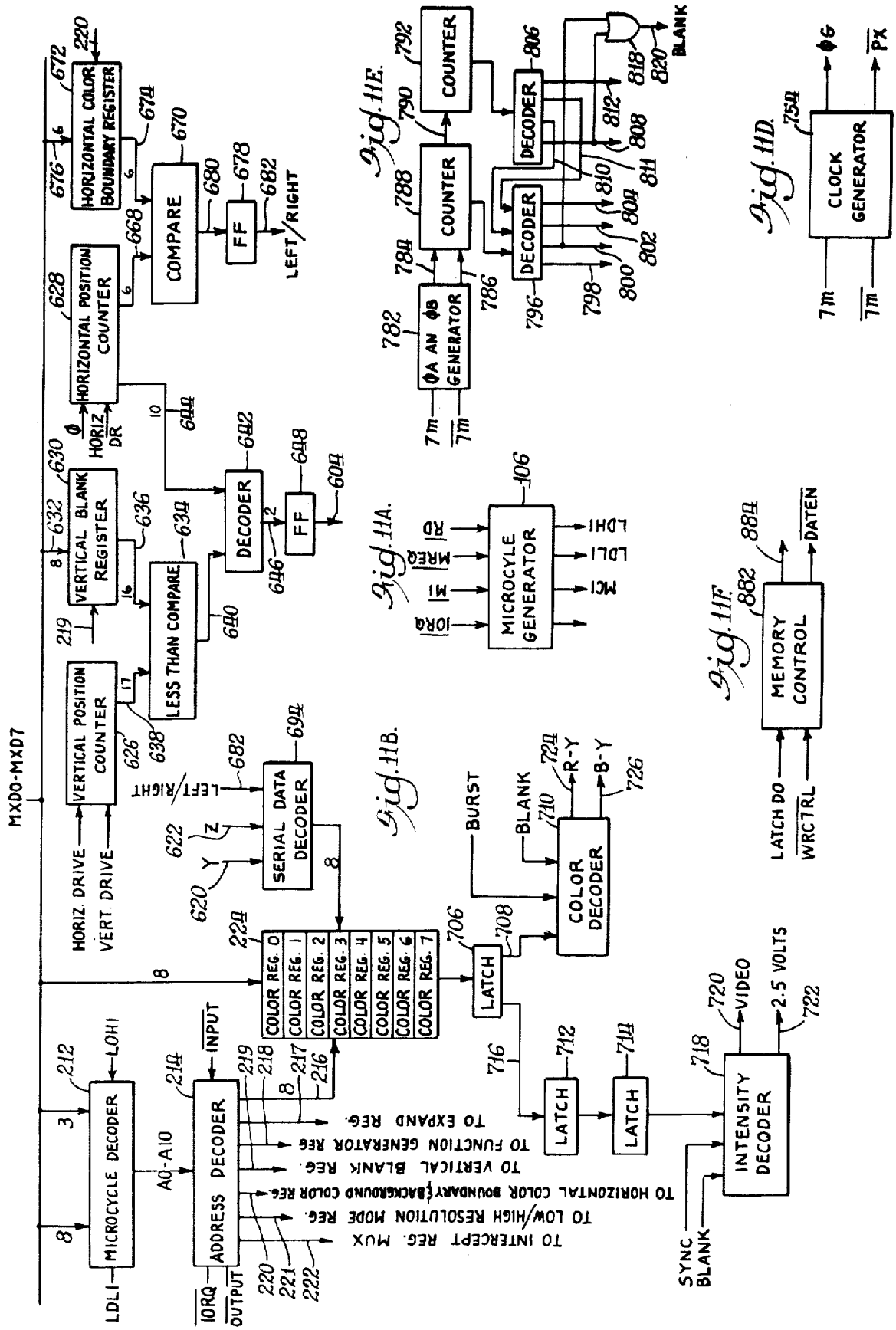

Fig. 11A.

Fig. 11B.

Fig. 11E.

Fig. 11F.

Fig. 11D.

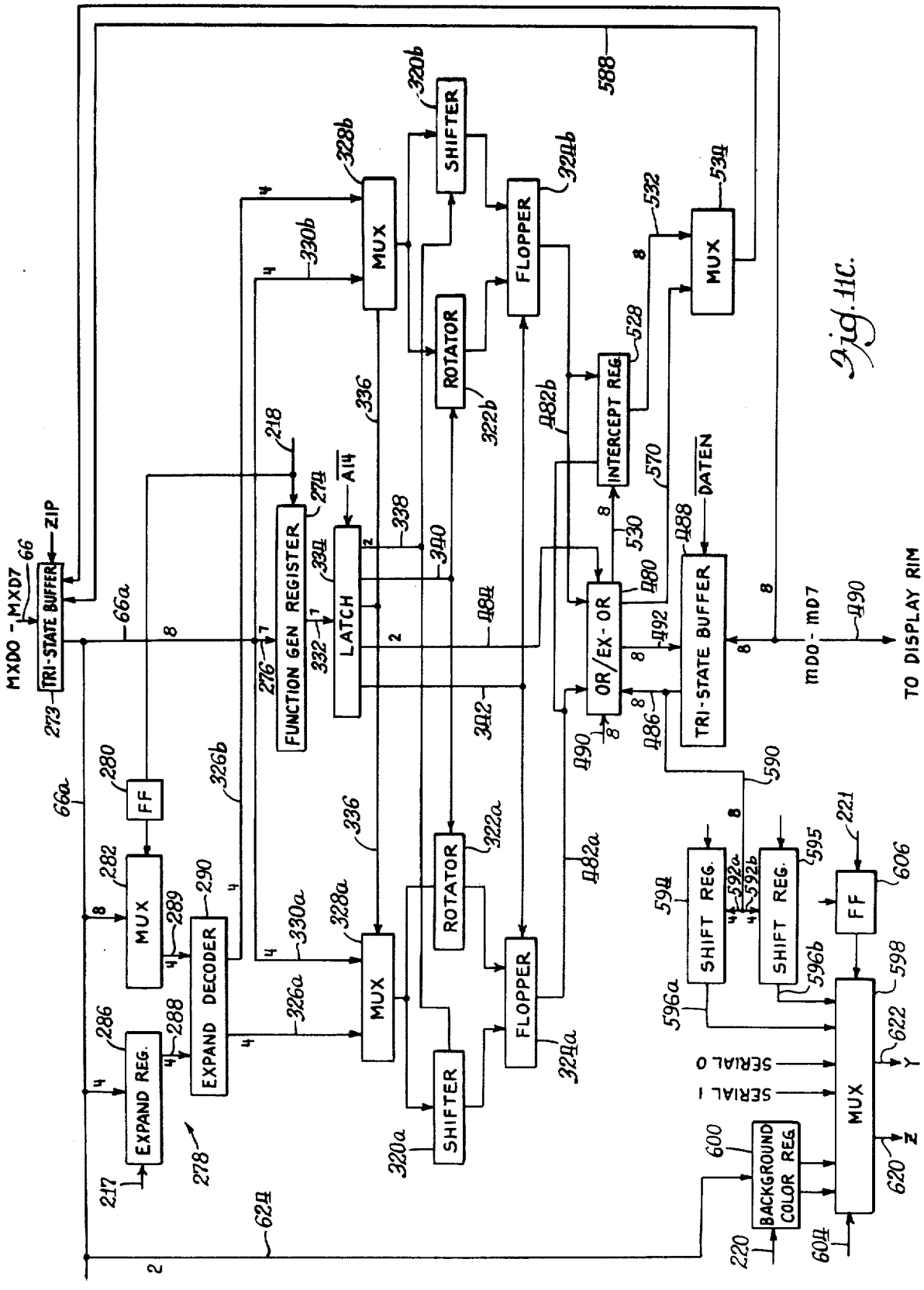
MXD0 - MXD7
TRI-STATE BUFFER
ZIP
FUNCTION GEN REGISTER
LATCH
A14
MUX
SHIFTER
ROTATOR
FLOPPER
INTERCEPT REG.
OR/EX-OR
TRI-STATE BUFFER
DATEN
mD0 - mD7
TO DISPLAY RIM
FF
EXPAND REG.
EXPAND DECODER
SHIFT REG.
SERIAL 0
SERIAL 1
BACKGROUND COLOR REG.

Fig. 11C.

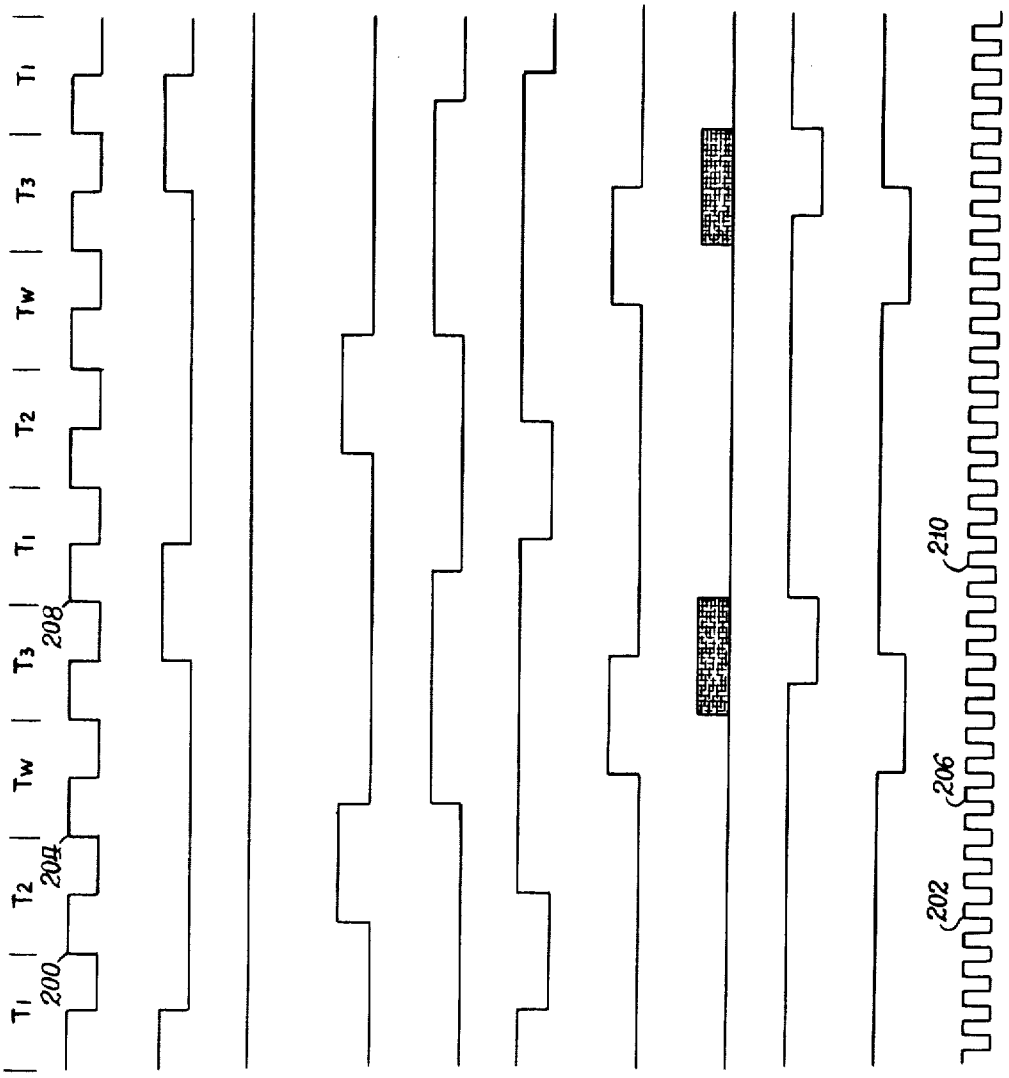
CLOCK STATE
T1
T2
Tw
T3
T1
T2
Tw
T3
T1
200
204
208
Φ
MREQ
RD
MCΦ
MCI
WAIT
RAS
MAΦ - MA8
DATEN
WRCTL
7M
202
206
210

Fig. 12A.

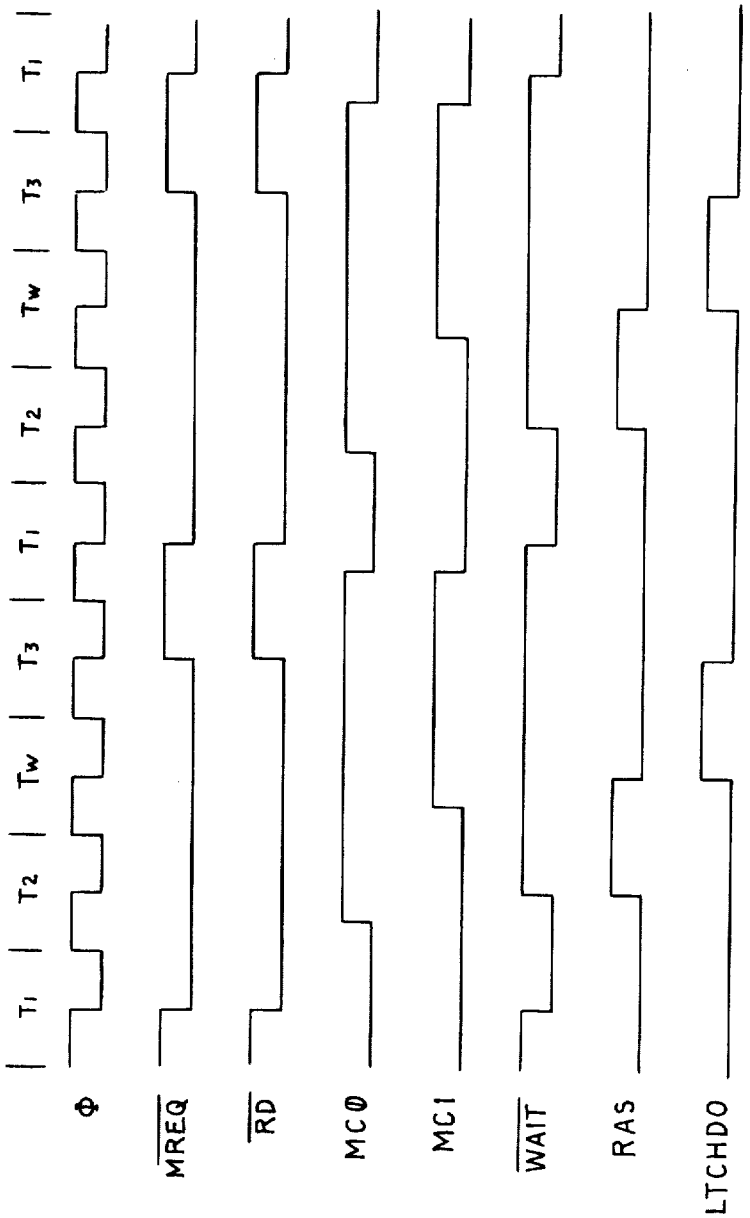

Fig. 12B.

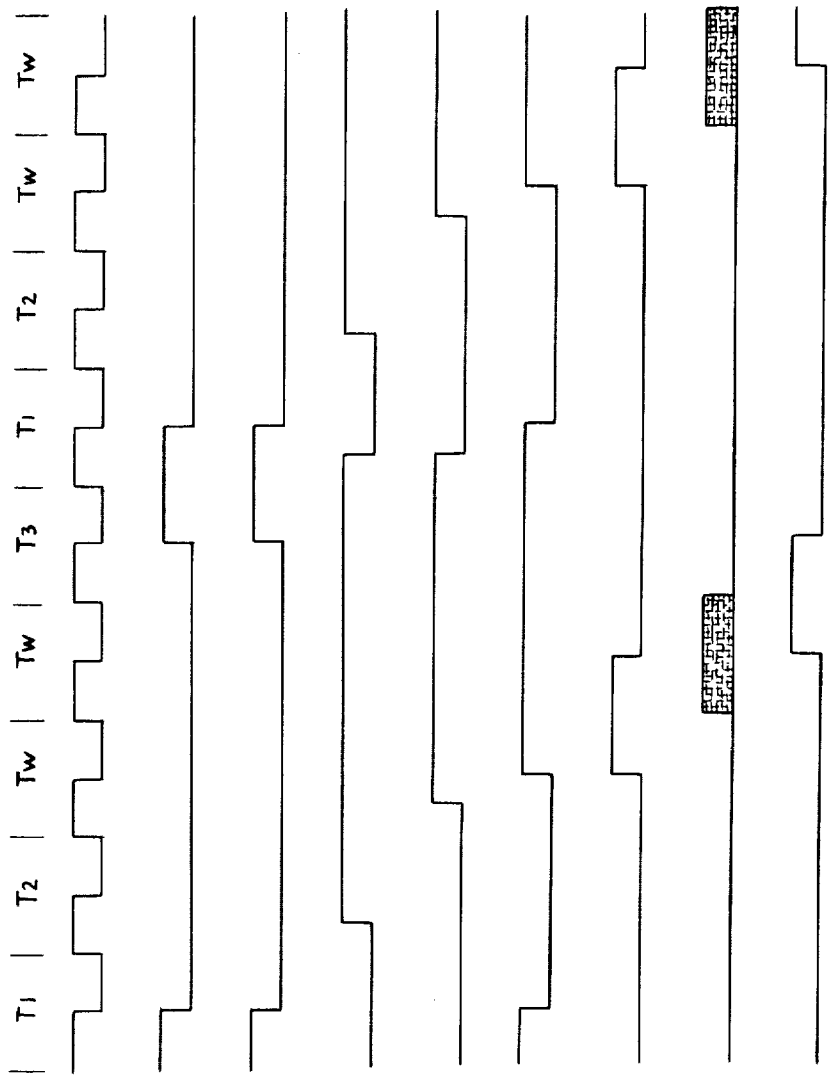
T1
T2
Tw
Tw
T3
T1
T2
Tw
Tw
Φ
MREQ
RD
MC0
MC1
WAIT
RAS
MA0-MA5
LTCHDO

Fig. 12C.

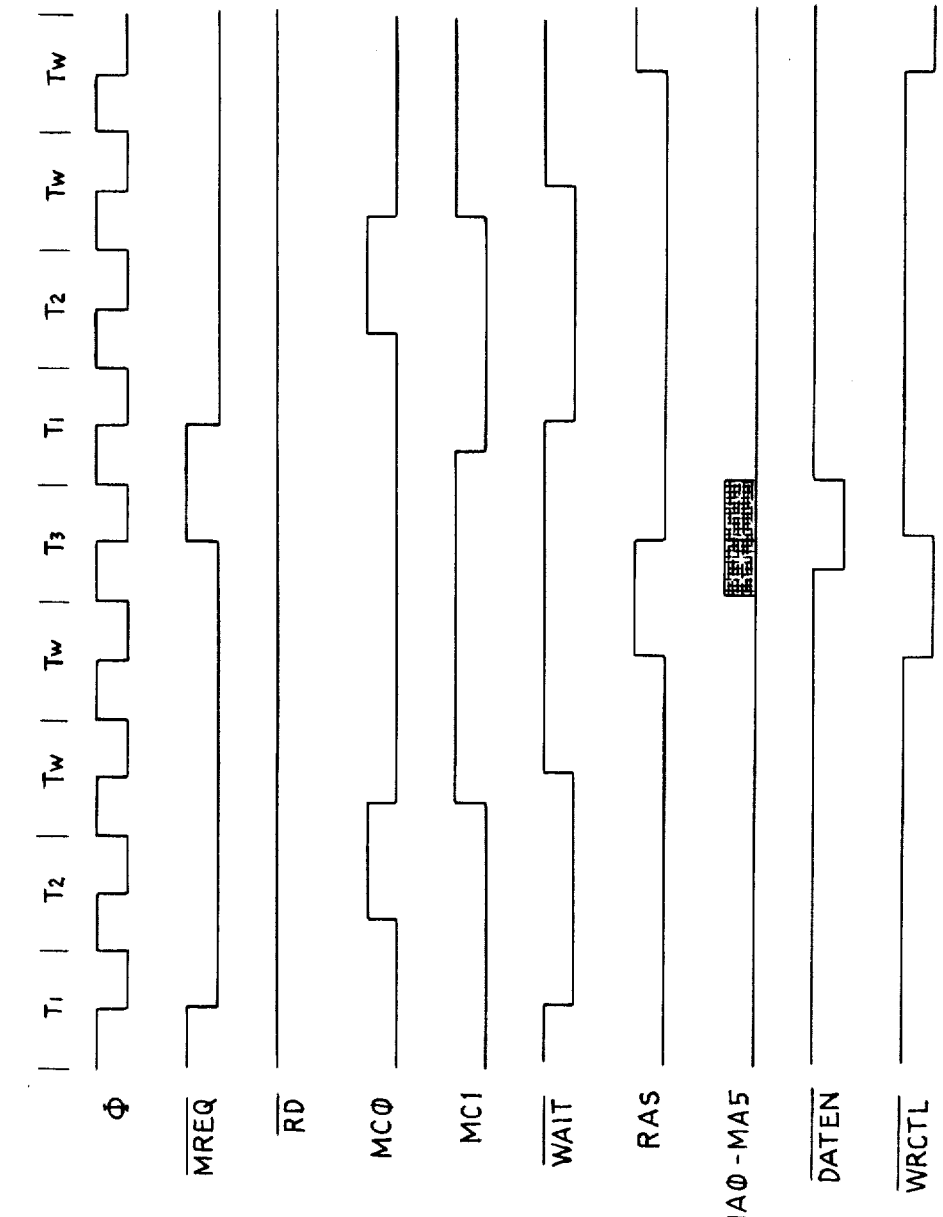
T1
T2
Tw
Tw
T3
T1
T2
Tw
Tw
Φ
MREQ
RD
MCΦ
MC1
WAIT
RAS
MAΦ-MA5
DATEN
WRCTL

Fig. 12D.

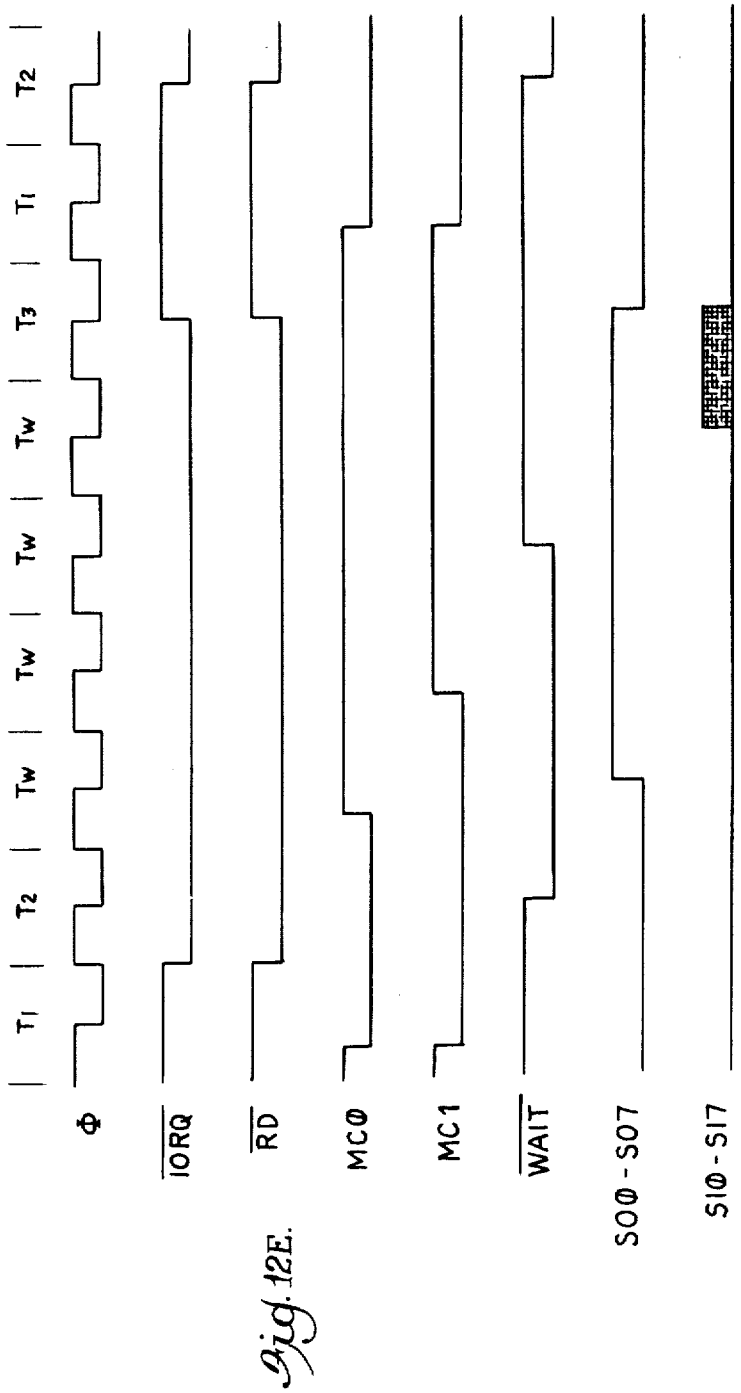

Fig. 12E.

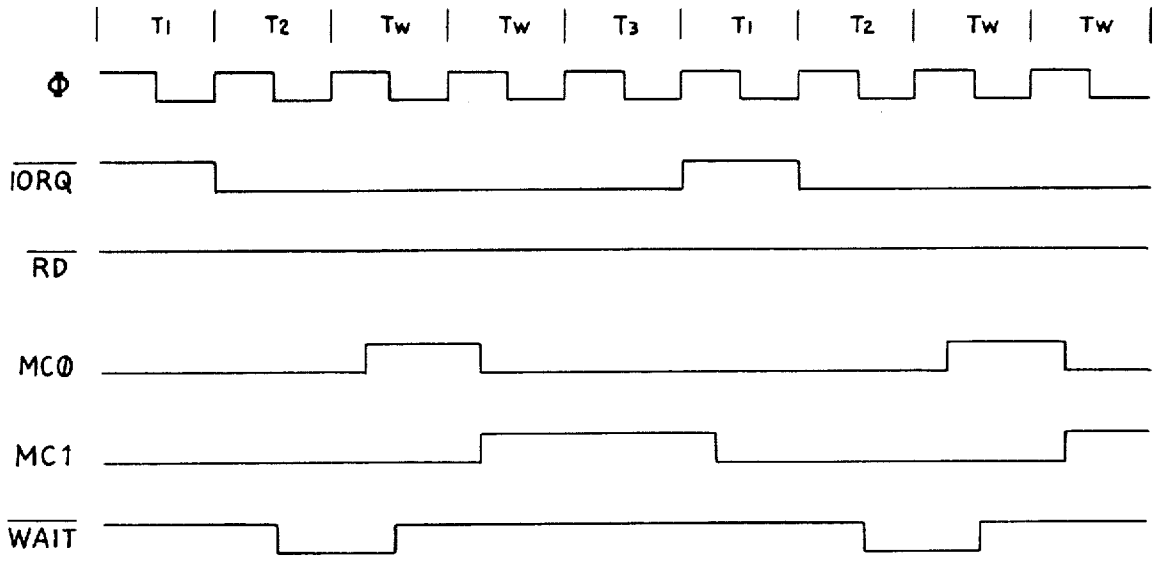

Fig. 12F.

Fig. 12G.

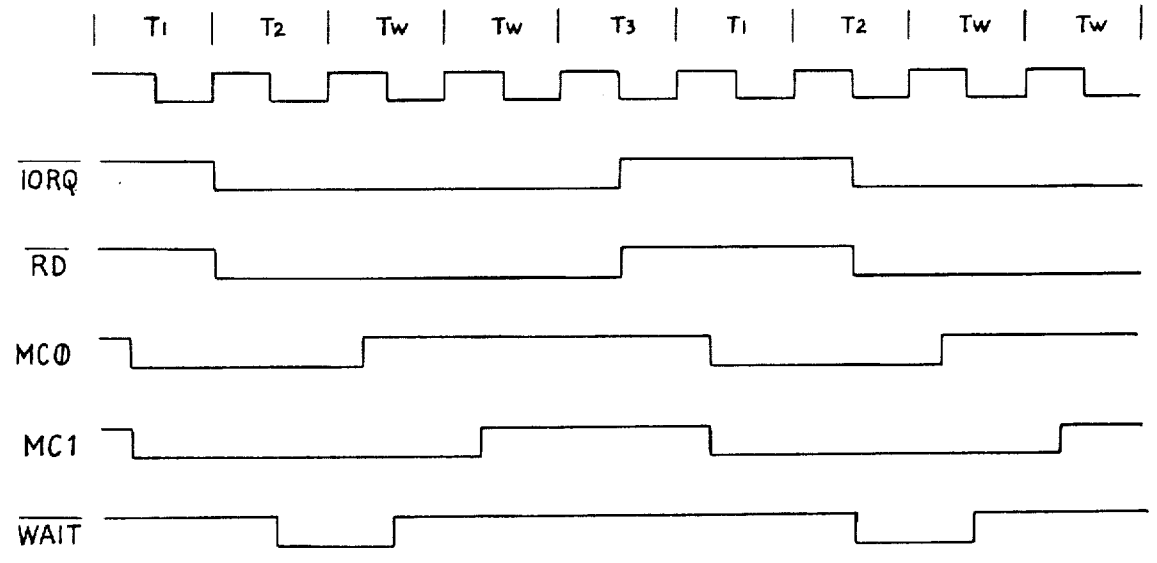

Fig. 13A.

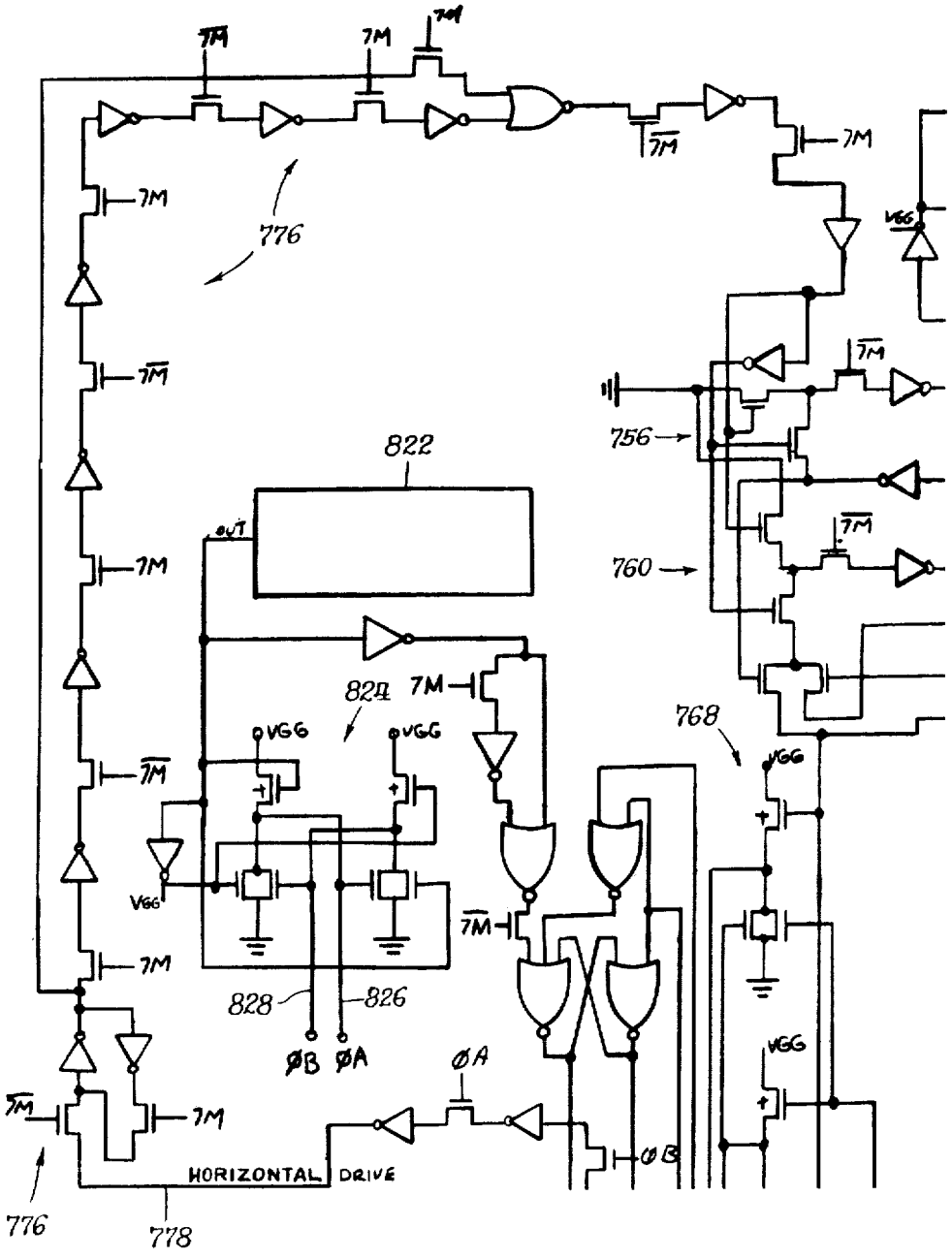
7M
776
822
OUT
824
VGG
828
826
ØB
ØA
HORIZONTAL DRIVE
778
756
760
768

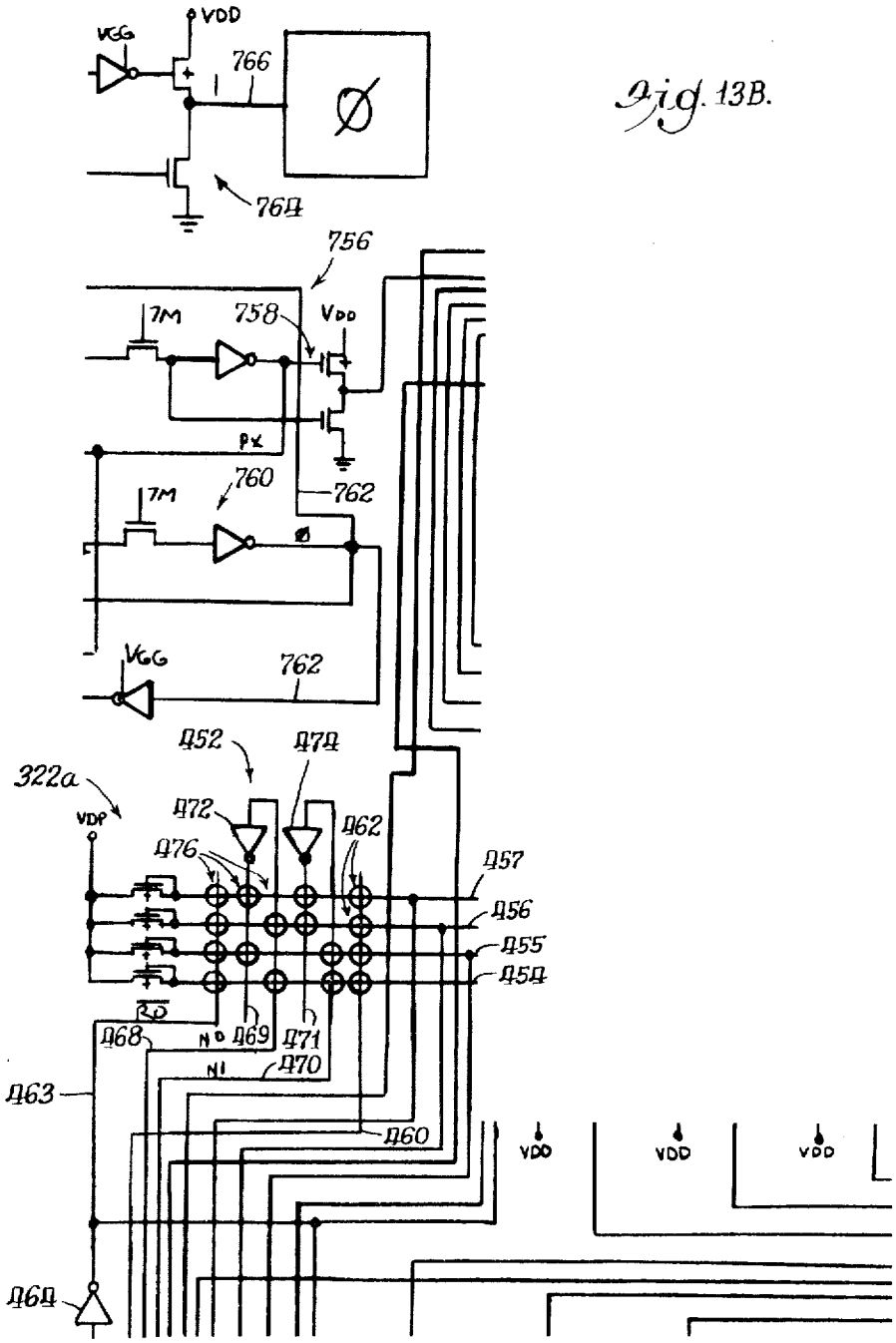
VDD
VGG
766
764
756
7M
758
VDD
PX
760
762
7M
VGG
762
452
474
322a
VDP
472
462
476
457
456
455
454
RD
468
ND
469
471
NI
470
463
460
VDD
VDD
VDD
464

Fig. 13B.

Fig. 13C.

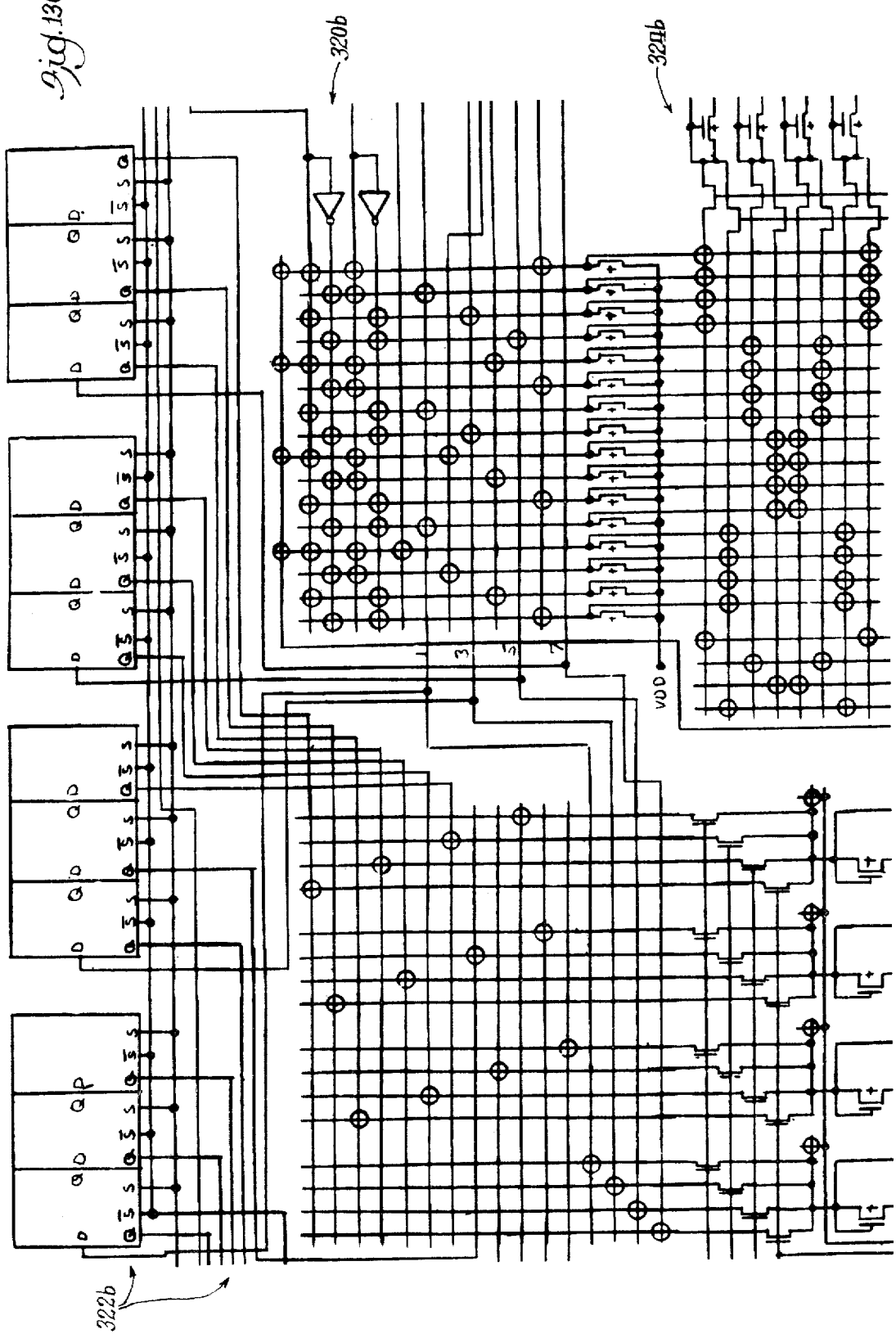

Fig. 13D.

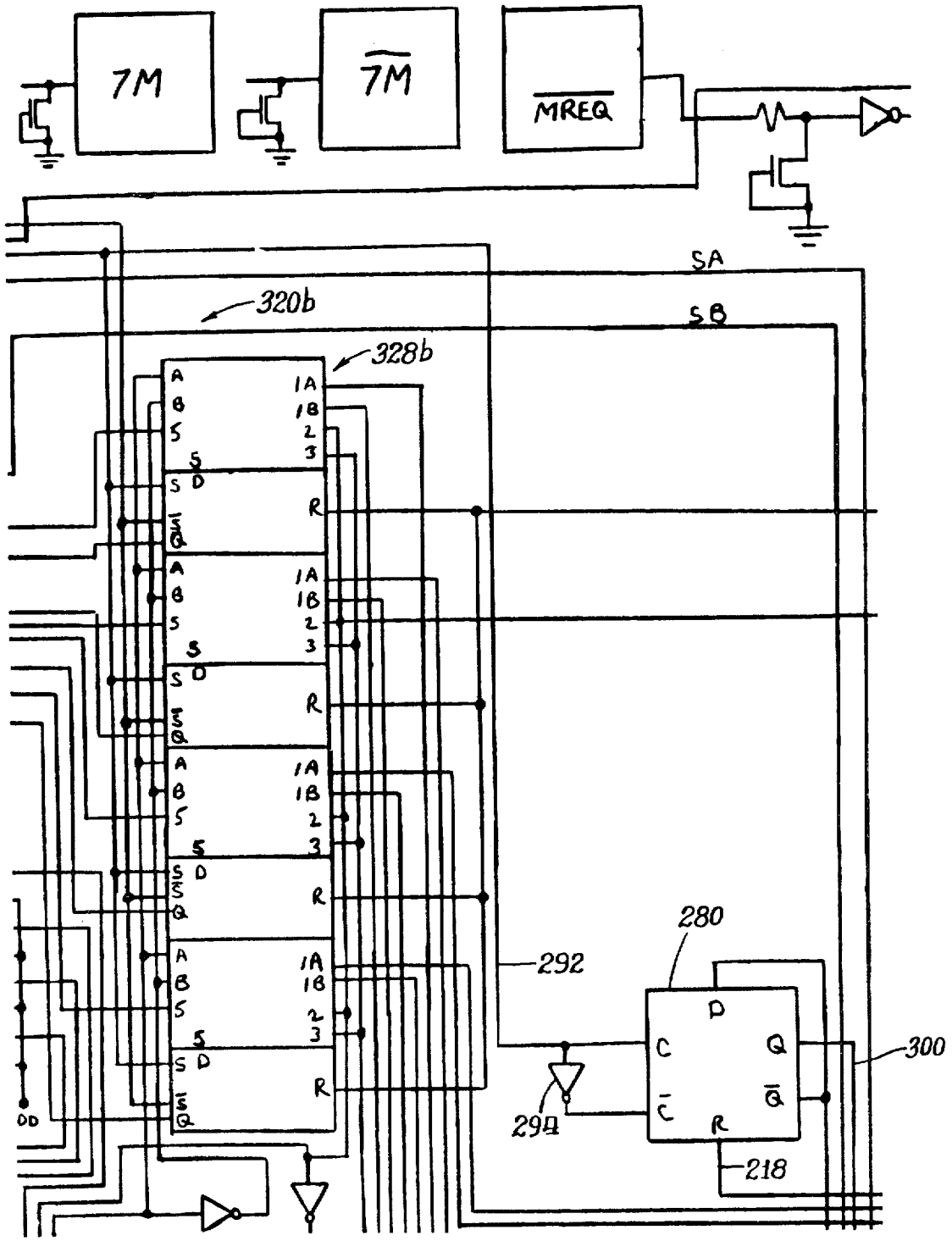

Fig. 13E.

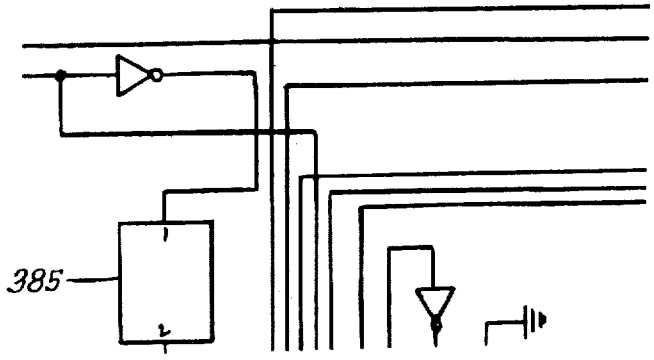

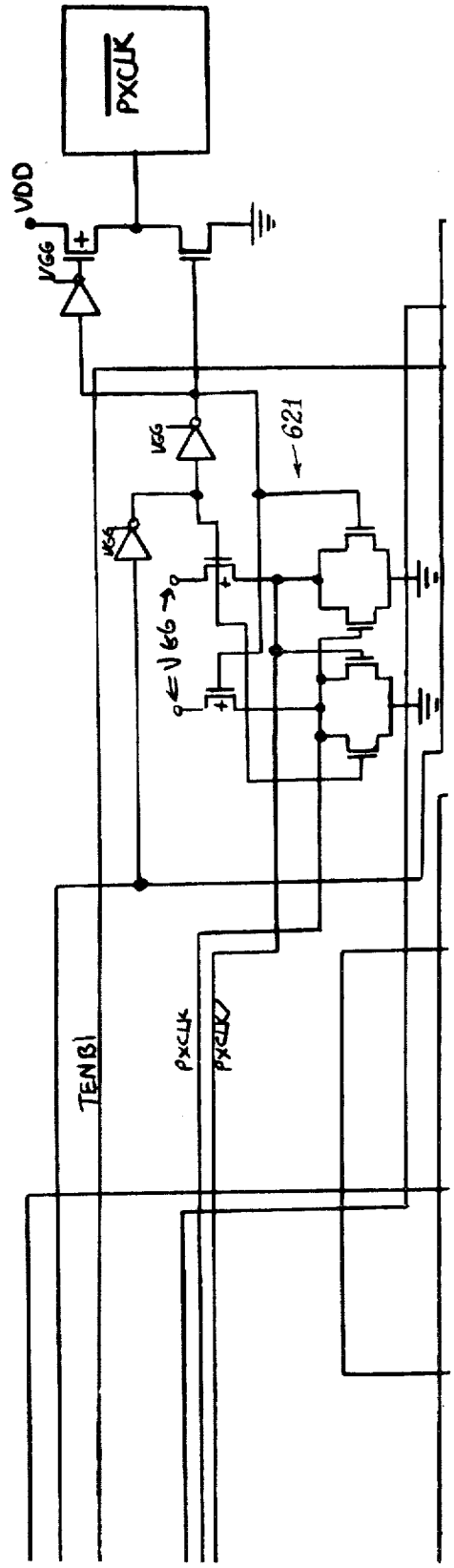

Fig. 13F.

Fig. 13G.

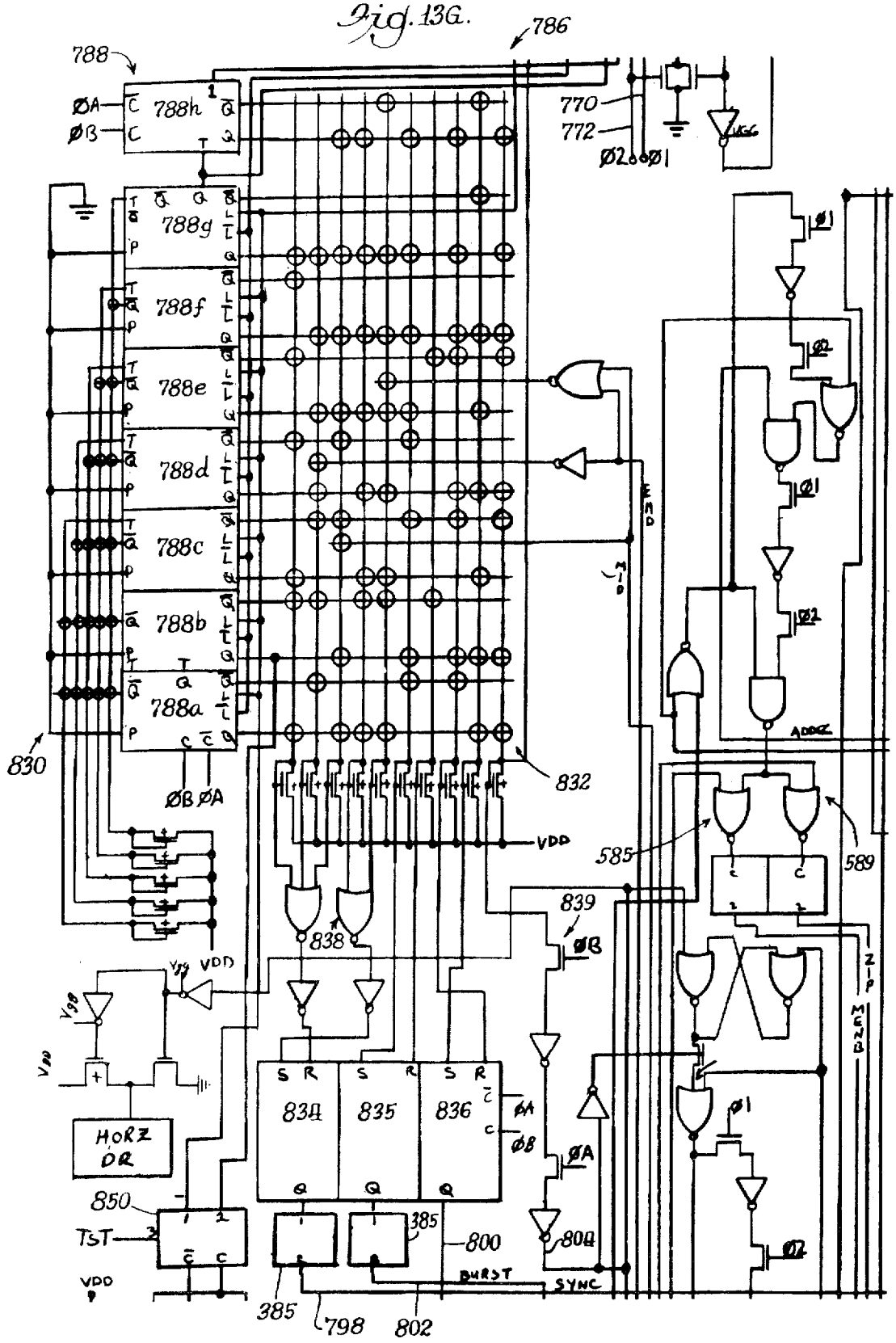
786
788
788h
ØA
ØB
770
772
Ø2
Ø1
788g
788f
788e
788d
788c
788b
788a
830
ØB ØA
832
VDD
585
589
839
ØB
838
VDD
HORZ DR
834
835
836
ØA
ØB
850
TST
VDD
385
800
804
BURST
SYNC
385
798
802
ADDR
ZIP
MENB
EMD
MID

Fig. 13H.

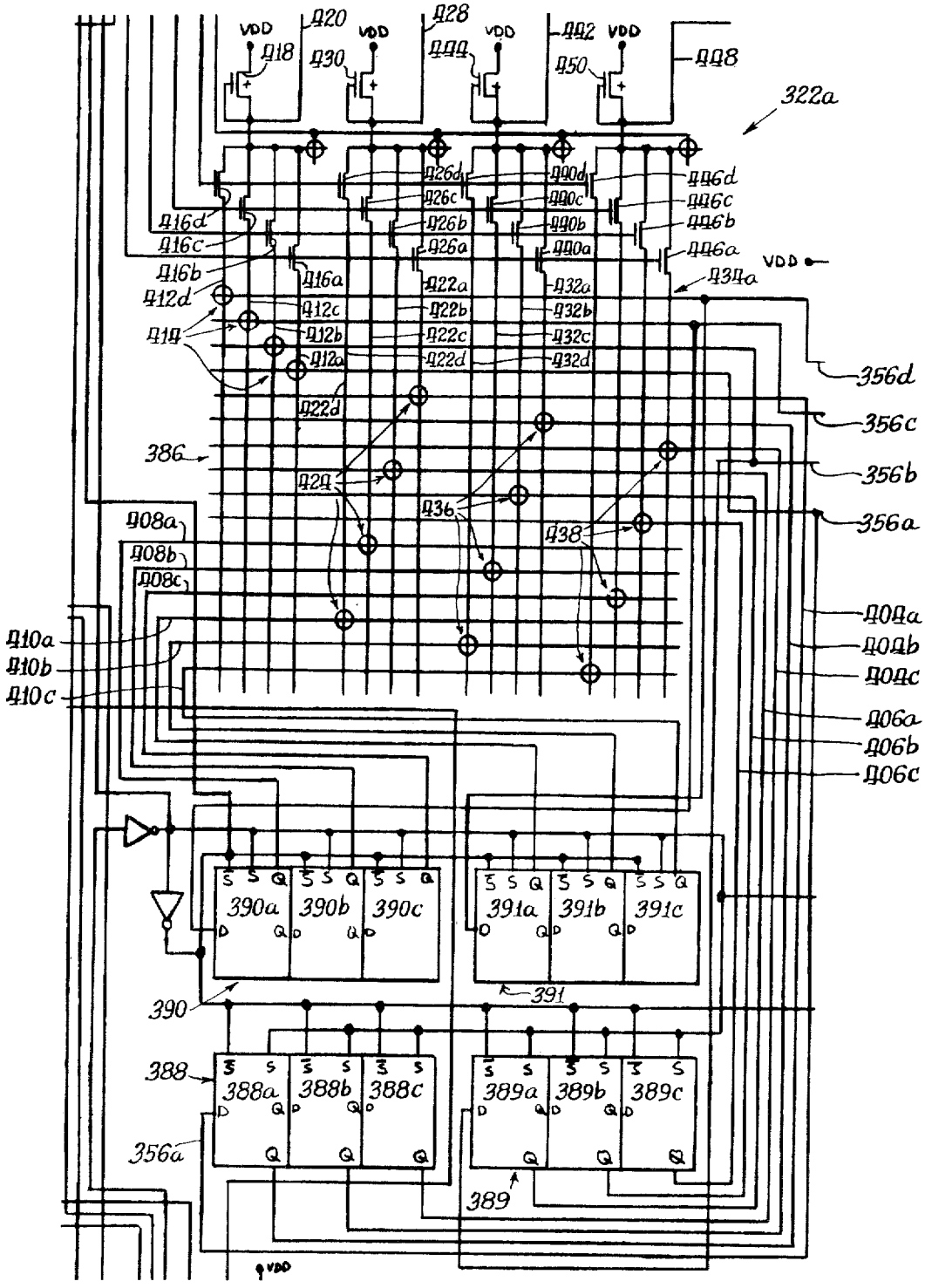
VDD
322a
356d
356c
356b
356a
386
390
391
388
389
390a
390b
390c
391a
391b
391c
388a
388b
388c
389a
389b
389c

Fig. 13I

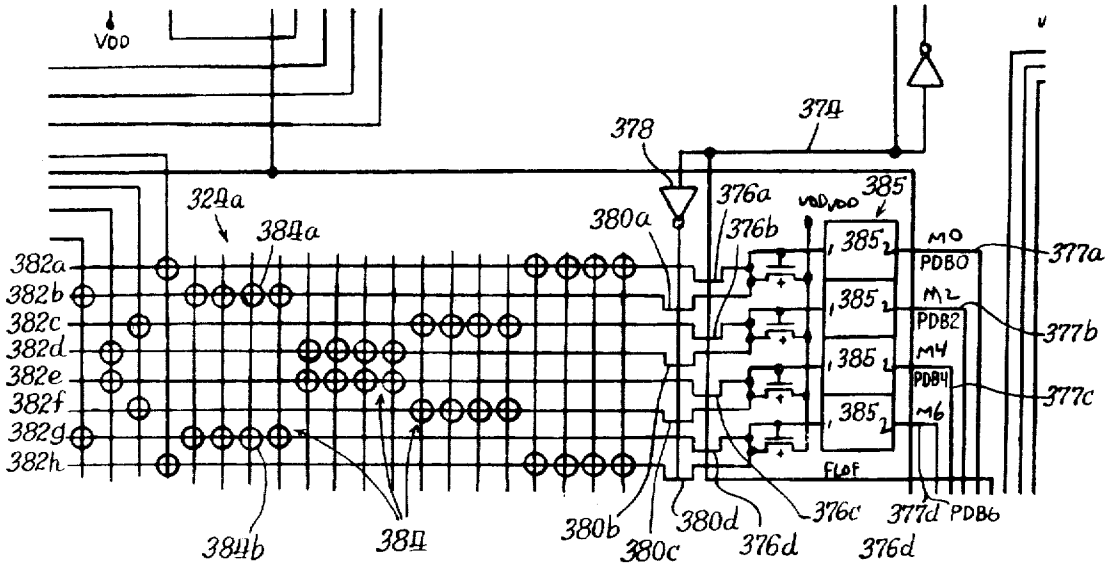
VDD
378
374
376a
376b
380a
385
M0
PDB0
M2
PDB2
M4
PDB4
M6
FLOF
377a
377b
377c
377d
PDB6
382a
382b
382c
382d
382e
382f
382g
382h
324a
384a
384b
384
380b
380c
380d
376c
376d

Fig. 13J.

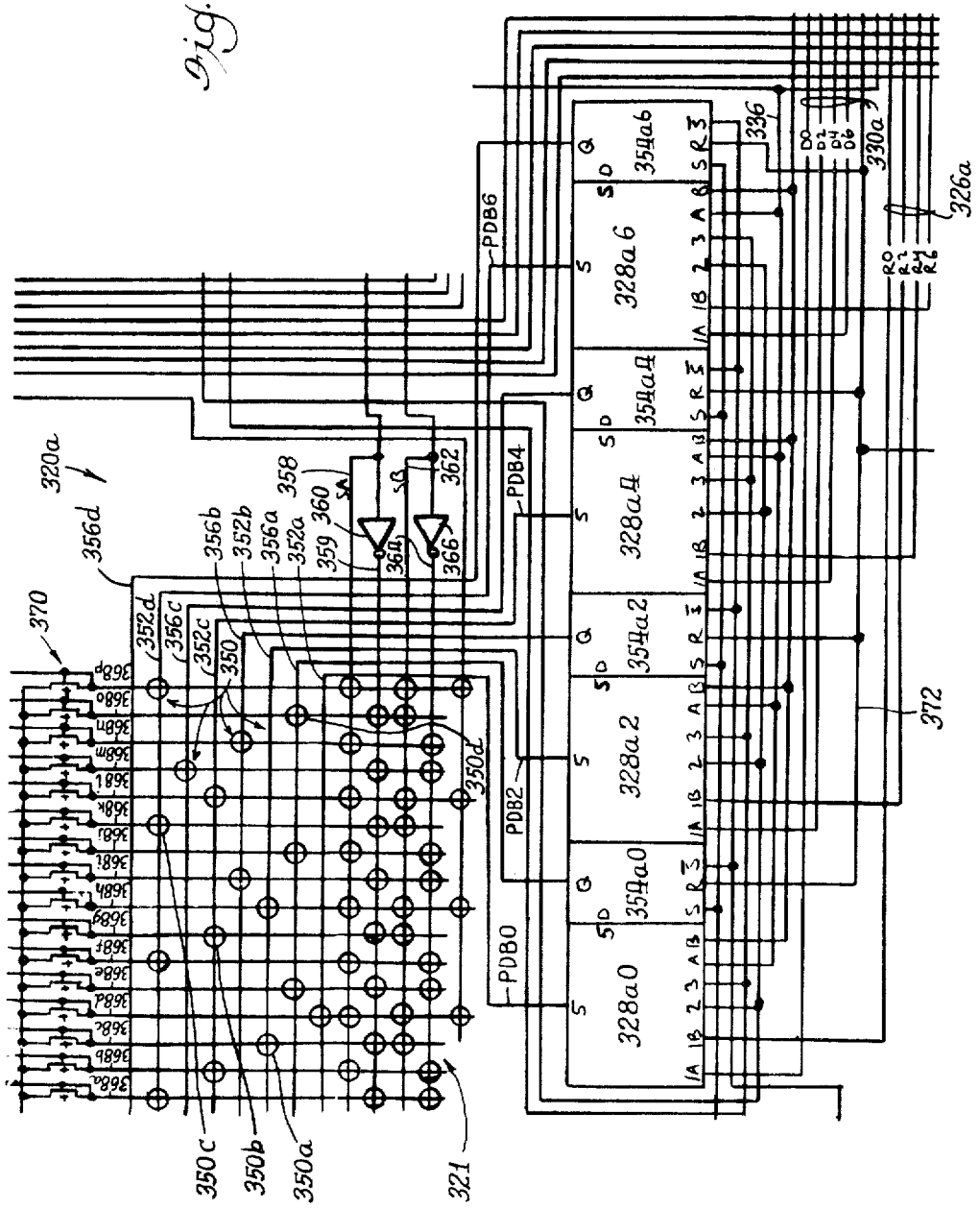
320a
356d
352d
356c
352c
350
356b
352b
356a
352a
358
359
360
362
364
366
370
350c
350b
350a
321
350d
PDB6
PDB4
PDB2
PDB0
328a6
328a4
328a2
328a0
354a6
354a4
354a2
354a0
336
330a
326a
372

Fig. 13K.

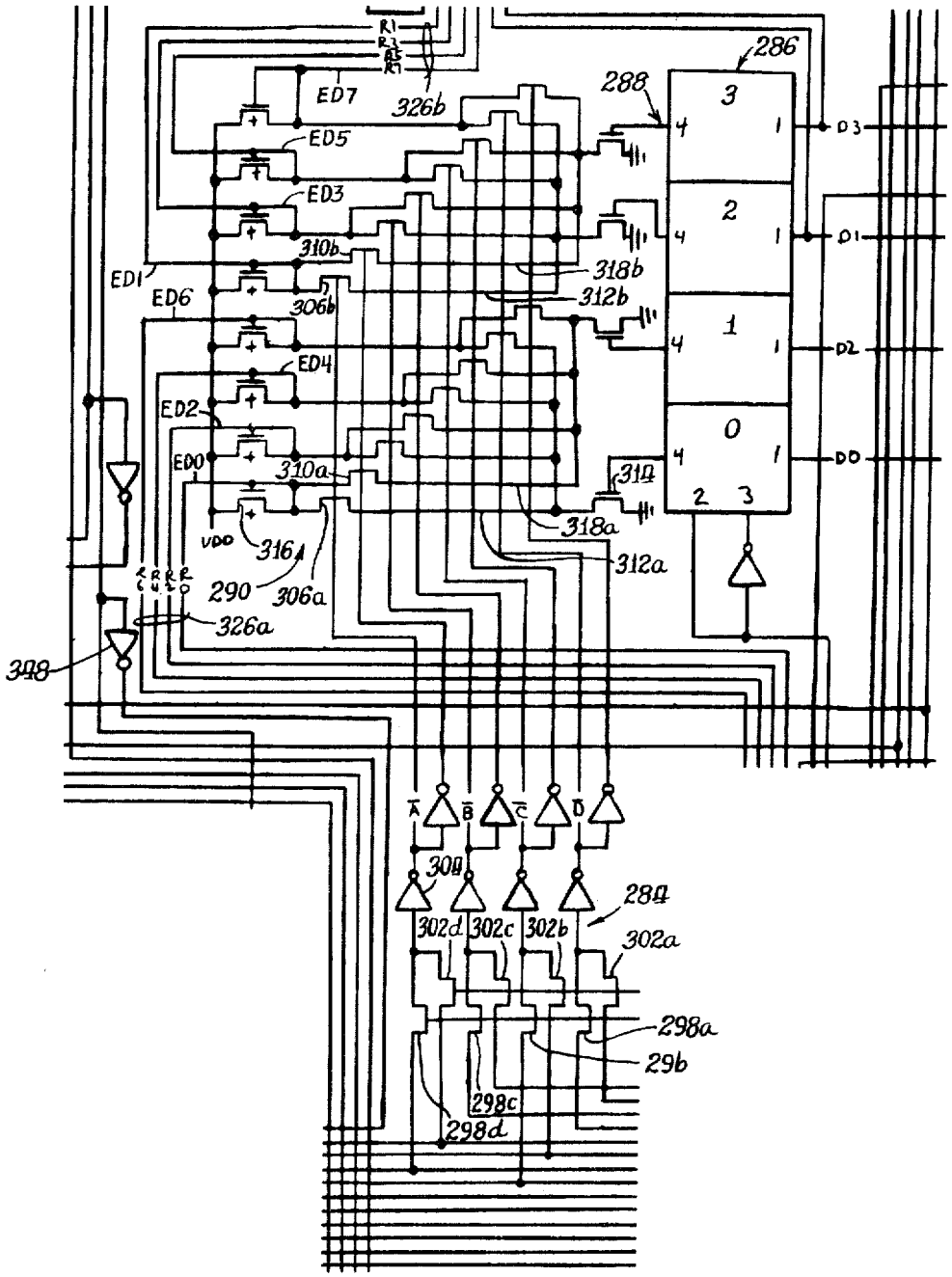
286
288
3
2
1
0
D3
D1
D2
D0
ED7
326b
ED5
ED3
310b
318b
312b
ED1
ED6
306b
ED4
ED2
ED0
310a
314
318a
312a
VDD
316
290
306a
326a
348
304
284
302d
302c
302b
302a
298a
29b
298c
298d

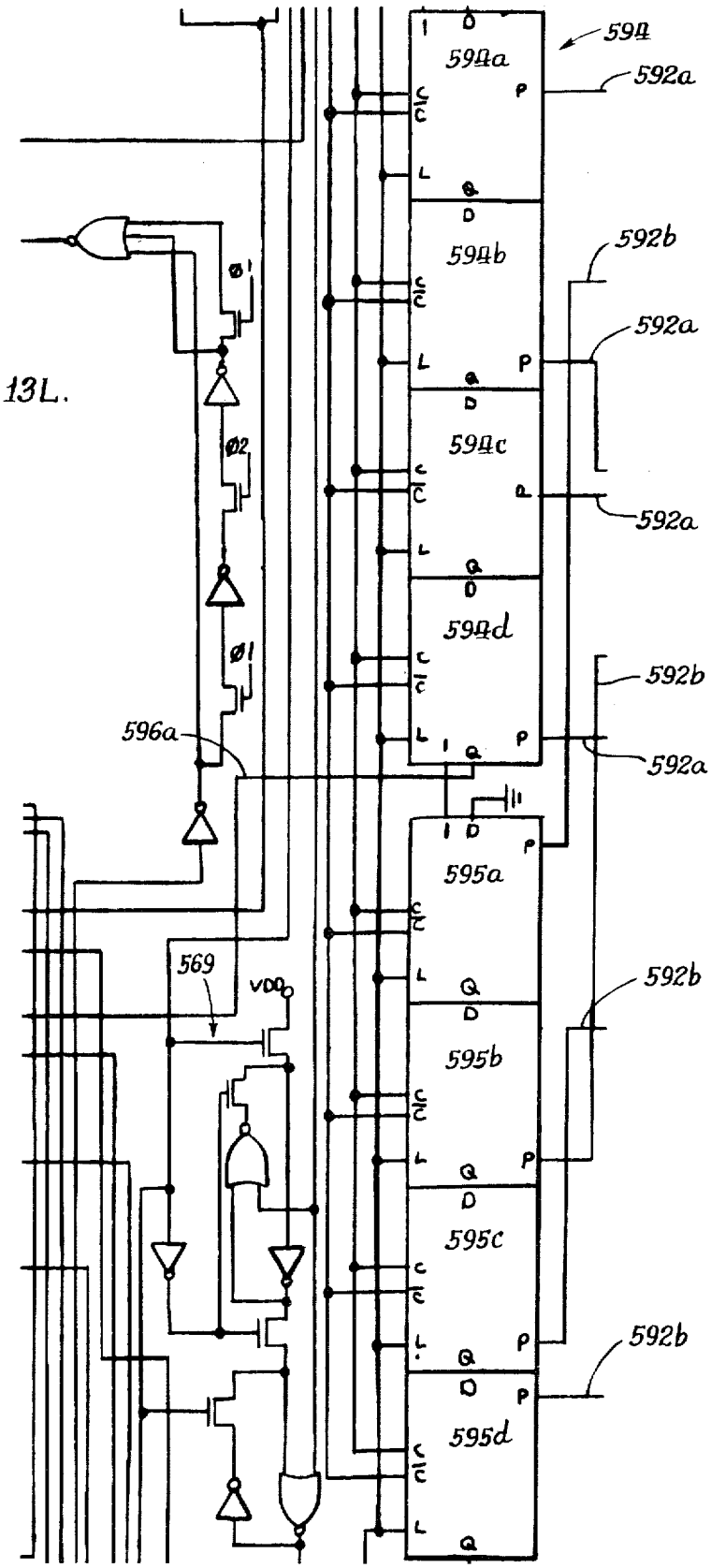
594
594a
592a
594b
592b
592a
594c
592a
594d
592b
592a
596a
595a
569
592b
595b
595c
592b
595d

Fig. 13L.

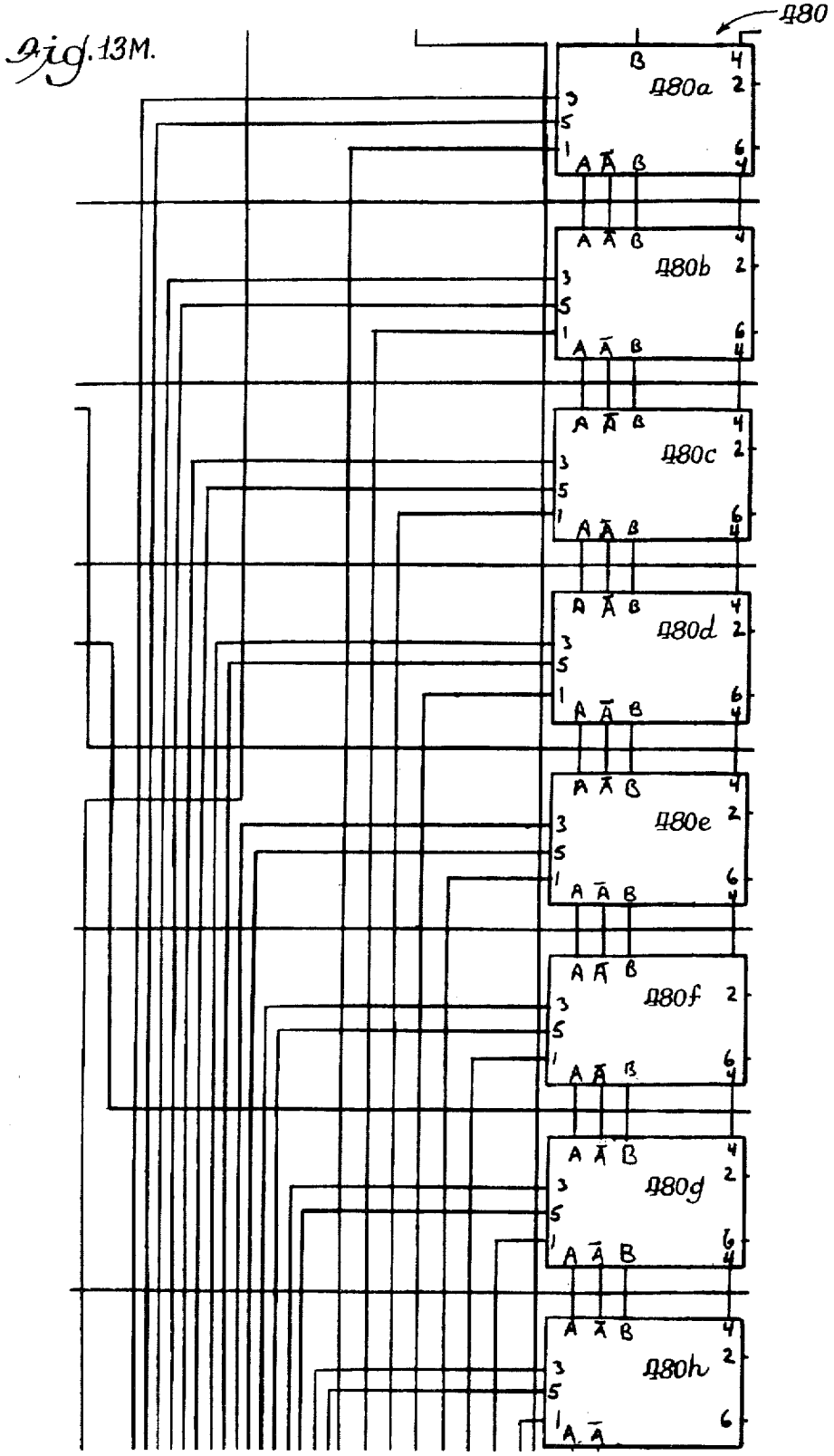
Fig. 13M.
480
480a
480b
480c
480d
480e
480f
480g
480h

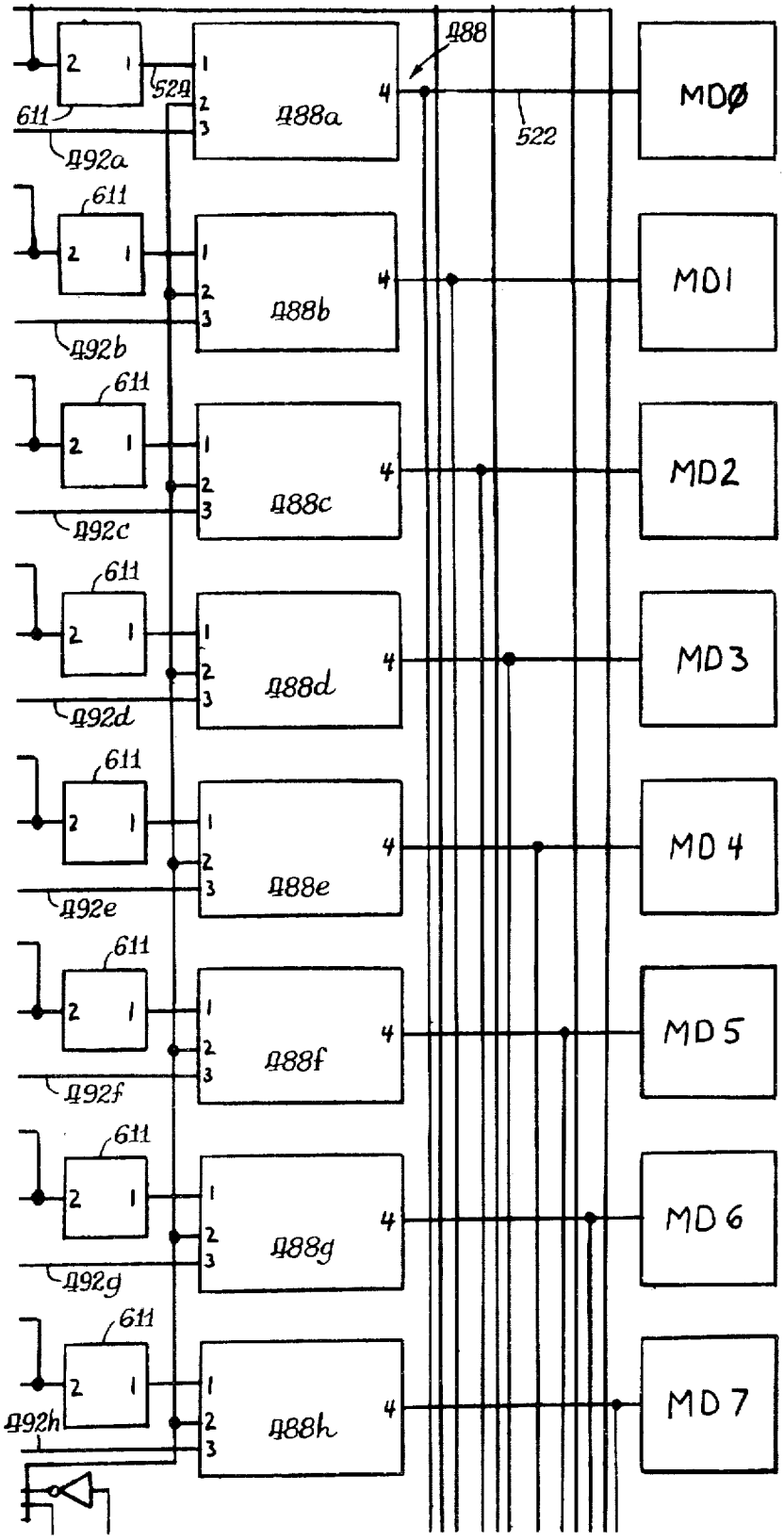
488
611
529
488a
522
MDØ
492a
611
488b
MD1
492b
611
488c
MD2
492c
611
488d
MD3
492d
611
488e
MD4
492e
611
488f
MD5
492f
611
488g
MD6
492g
611
488h
MD7
492h

Fig. 13N.

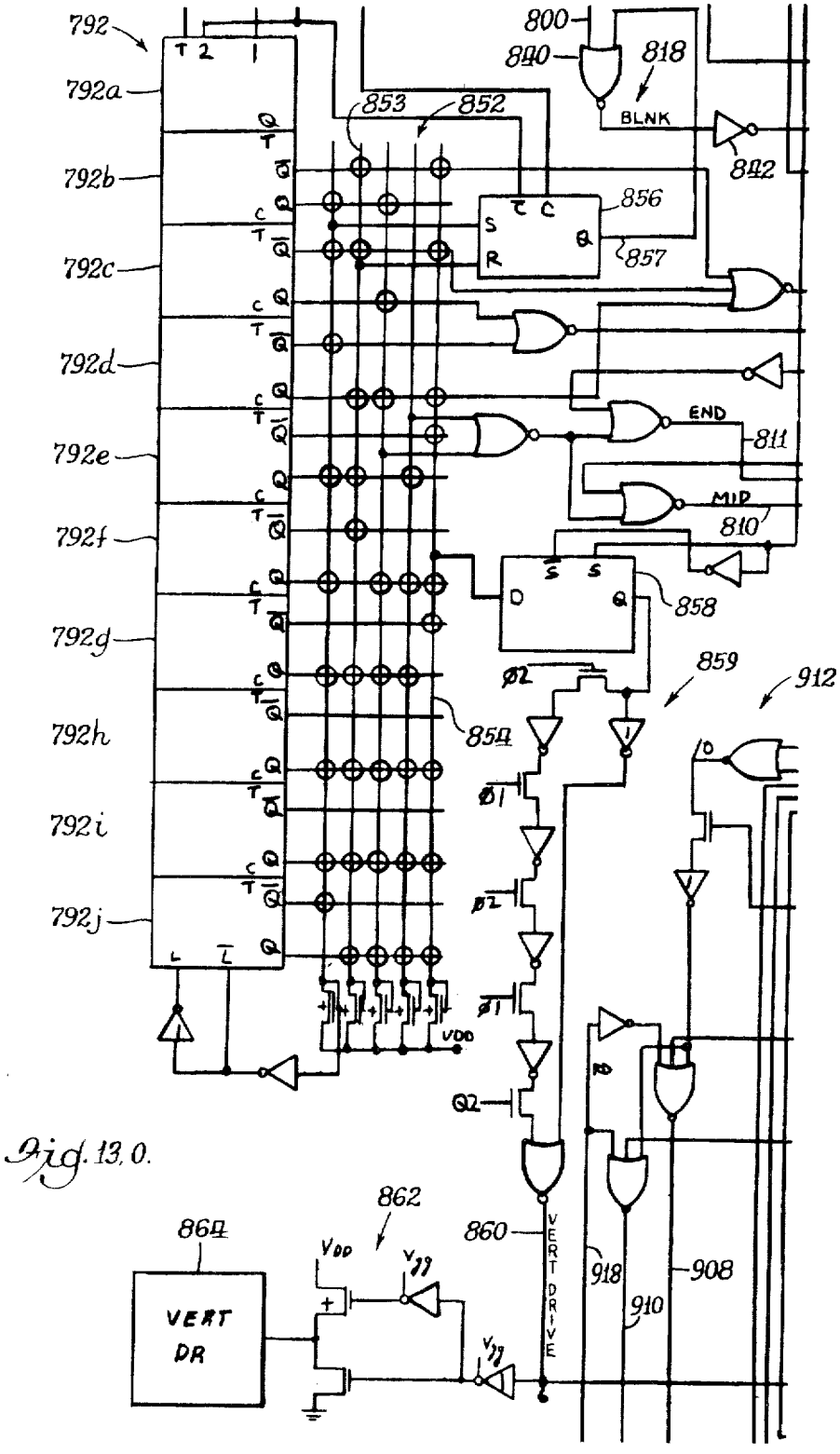
792
792a
792b
792c
792d
792e
792f
792g
792h
792i
792j
800
840
818
BLNK
842
853
852
856
857
END
811
MID
810
858
859
912
854
VDD
Q2
860
VERT DRIVE
918
910
908
862
864
VERT DR

Fig. 13.0.

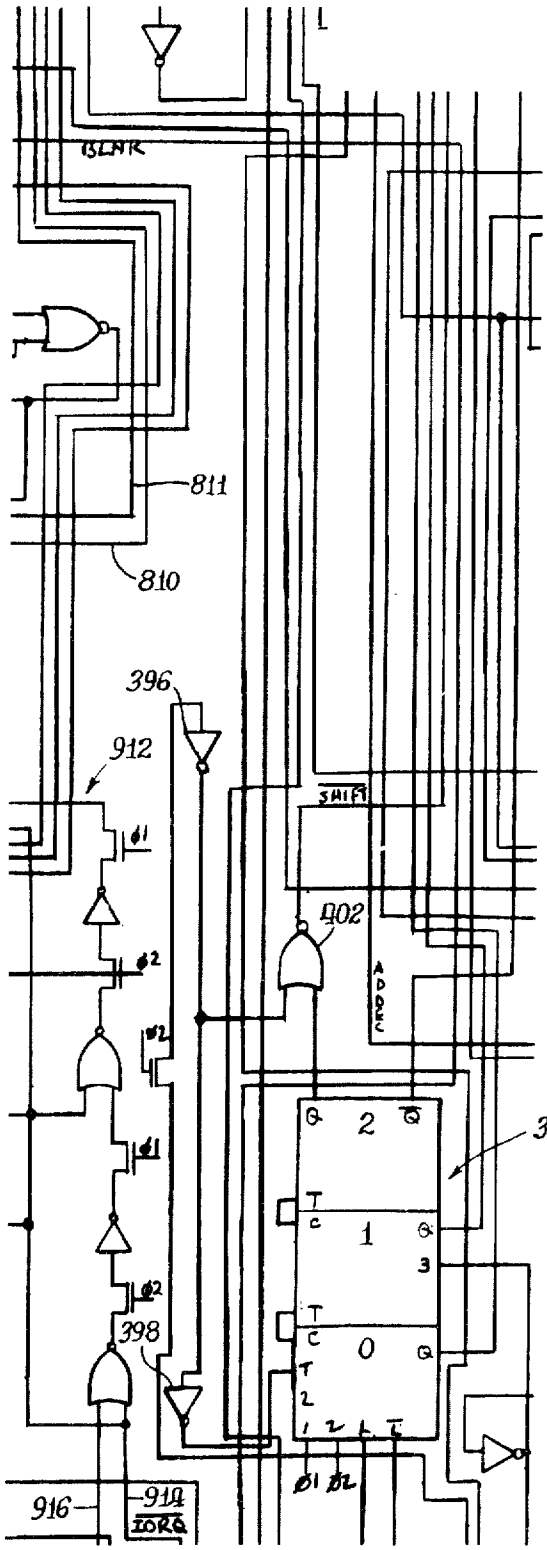

Fig. 13P.

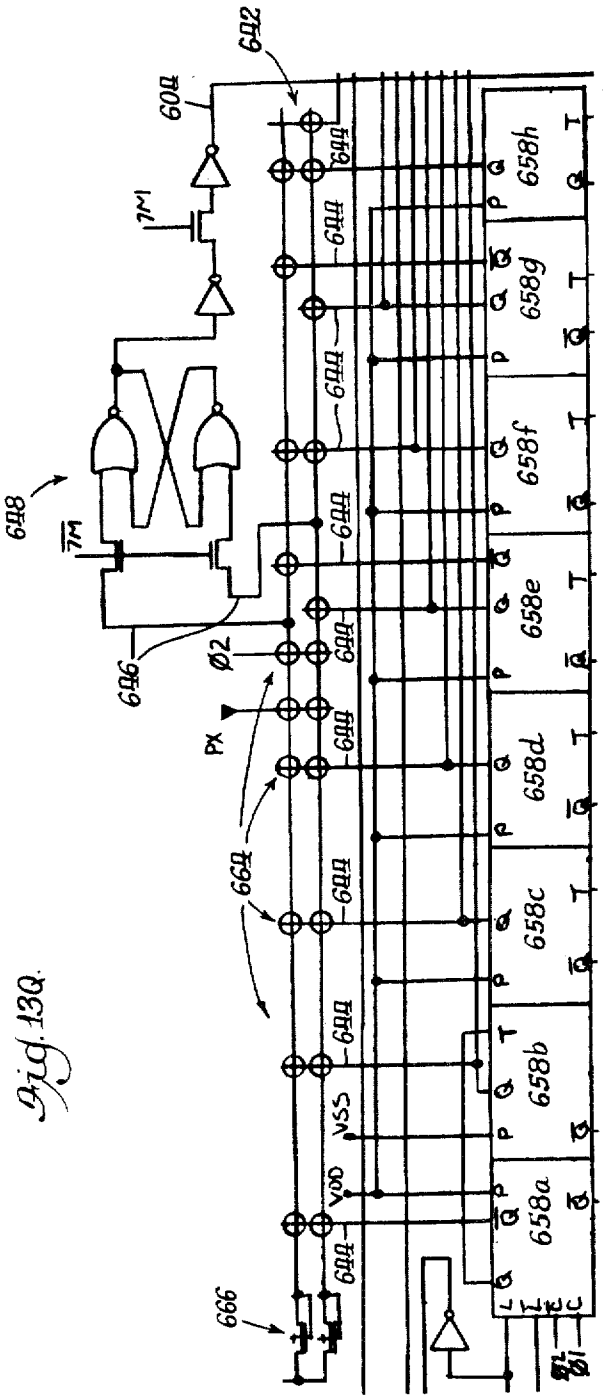
642
604
7M
648
7M
646
Ø2
PX
664
666
VSS
VDD
658a
658b
658c
658d
658e
658f
658g
658h

Fig. 13Q.

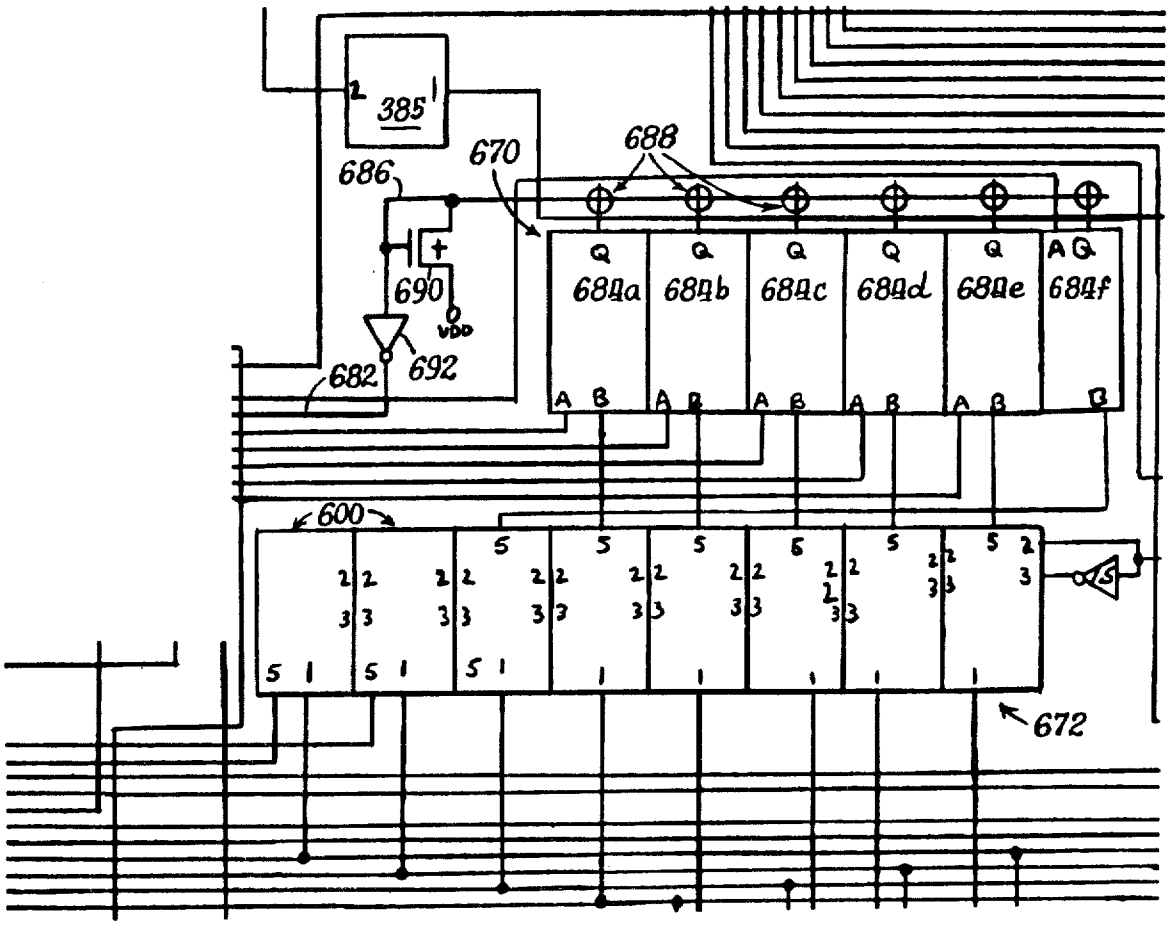
385
686
670
688
690
VDD
692
682
684a
684b
684c
684d
684e
684f
600
672

Fig. 13R.

Fig. 13S.

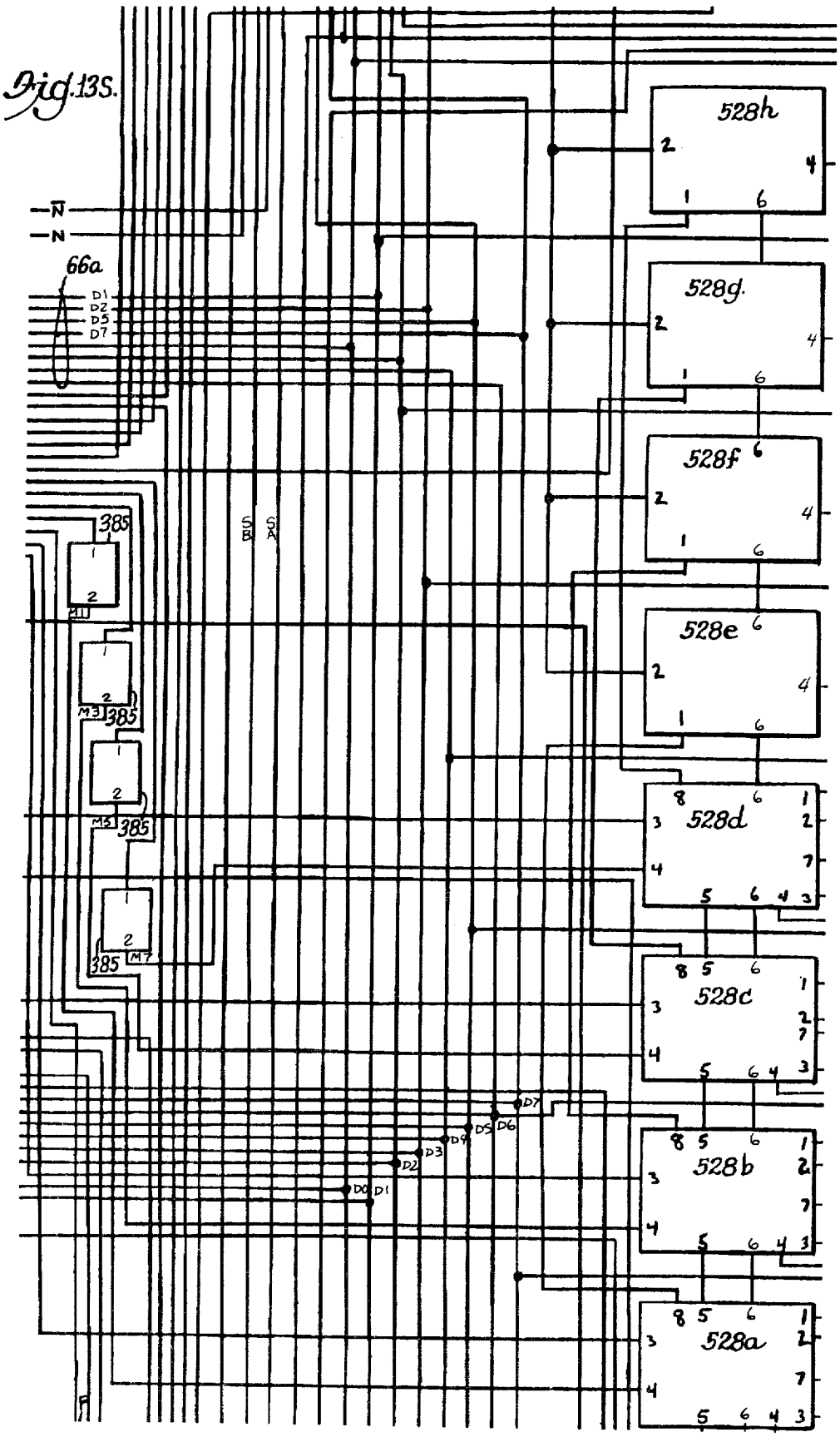
528h
528g
528f
528e
528d
528c
528b
528a
66a
D1
D2
D5
D7
385
M1
M3
M5
M7
SB
SA
D0
D1
D2
D3
D4
D5
D6
D7

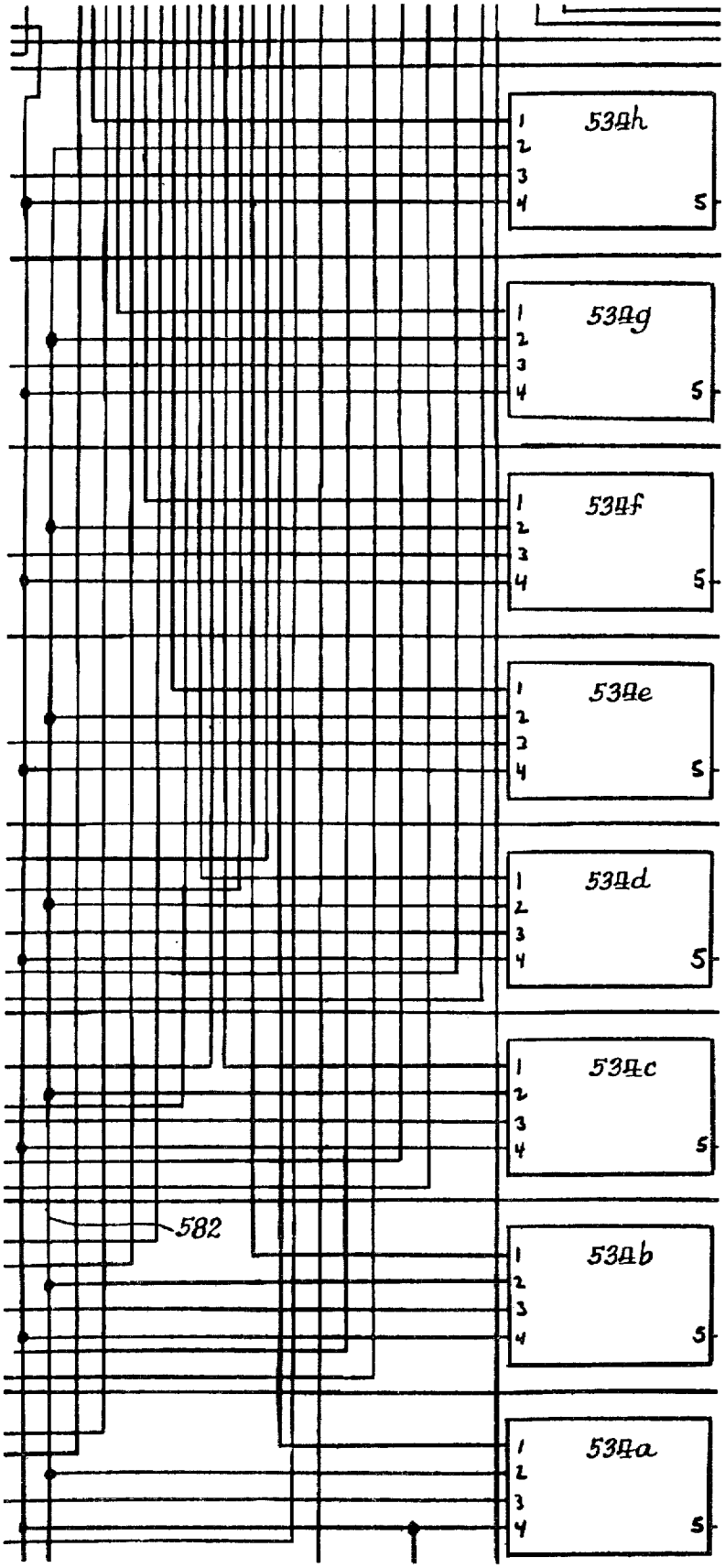

Fig. 13T.

Fig. 13U.

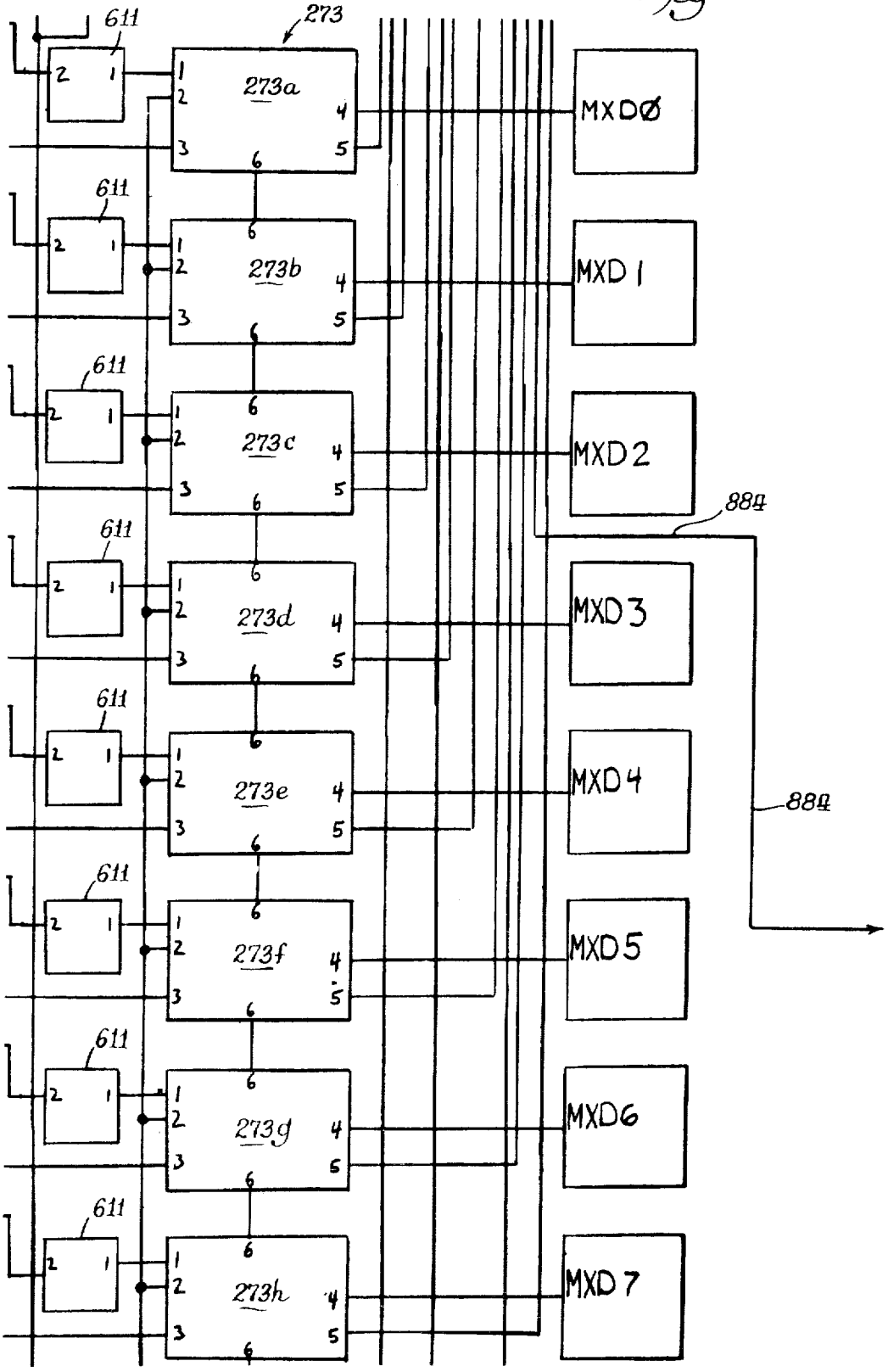
611
273
273a
273b
273c
273d
273e
273f
273g
273h
MXDØ
MXD 1
MXD 2
MXD 3
MXD 4
MXD 5
MXD6
MXD 7
884
884

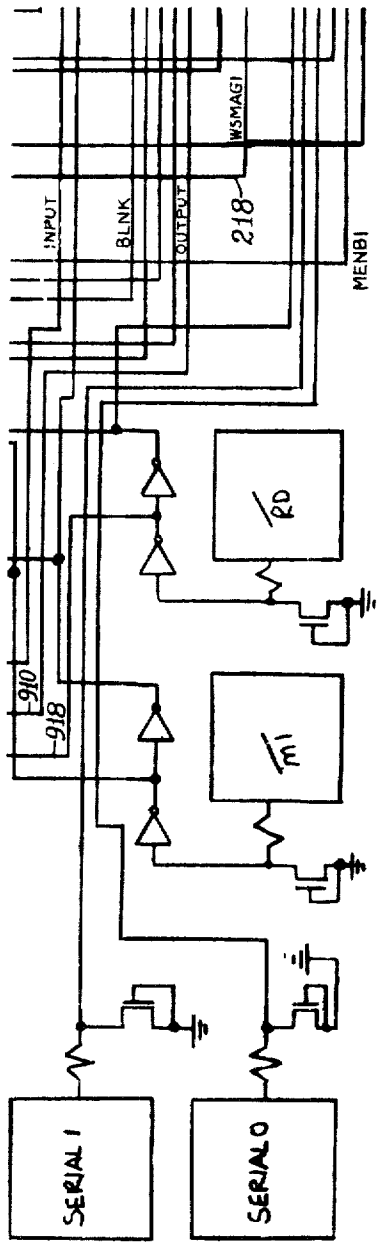
INPUT
BLNK
OUTPUT
WSMAGI
218
MENBI
RD
M1
910
918
SERIAL 1
SERIAL 0

Fig. 13V.

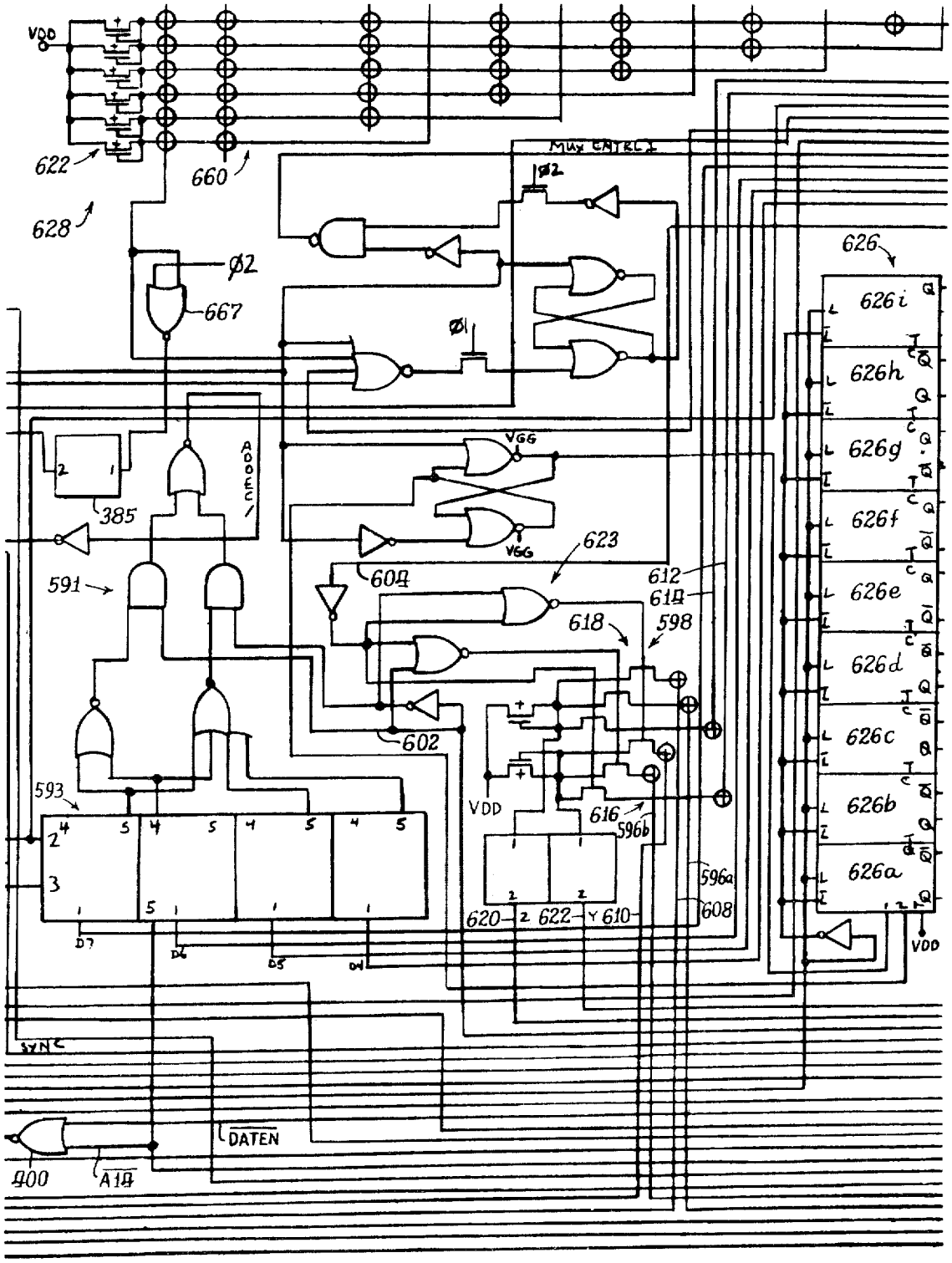
VDD
622
660
628
Ø2
667
MUX CNTRL
Ø2
Ø1
626
626i
626h
626g
626f
626e
626d
626c
626b
626a
VDD
VGG
VGG
385
ADDEC
591
623
604
612
614
618
598
602
593
VDD
616
596b
596a
608
620
622
610
D7
D6
D5
D4
SYNC
DATEN
400
A14

Fig. 13W.

Fig. 13X.

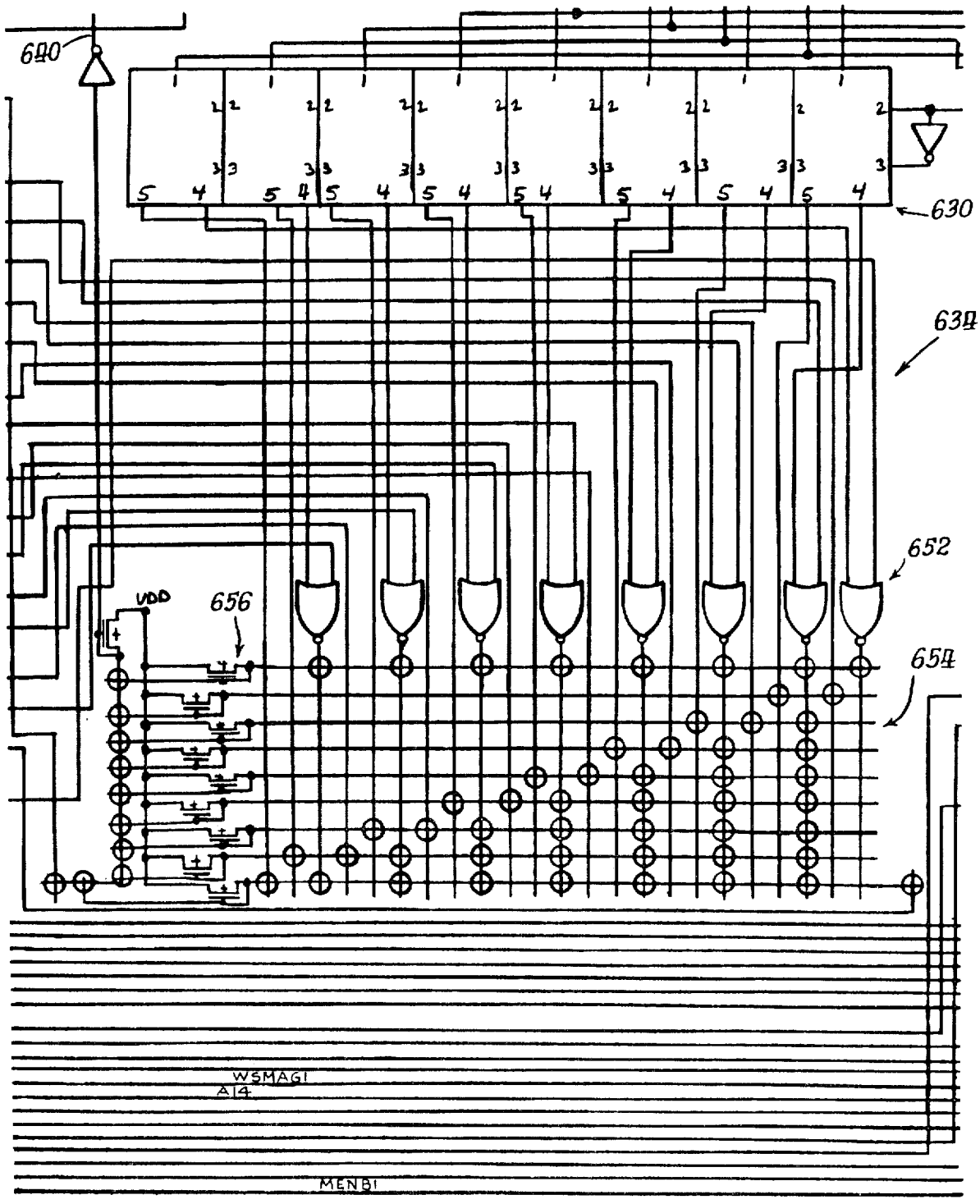

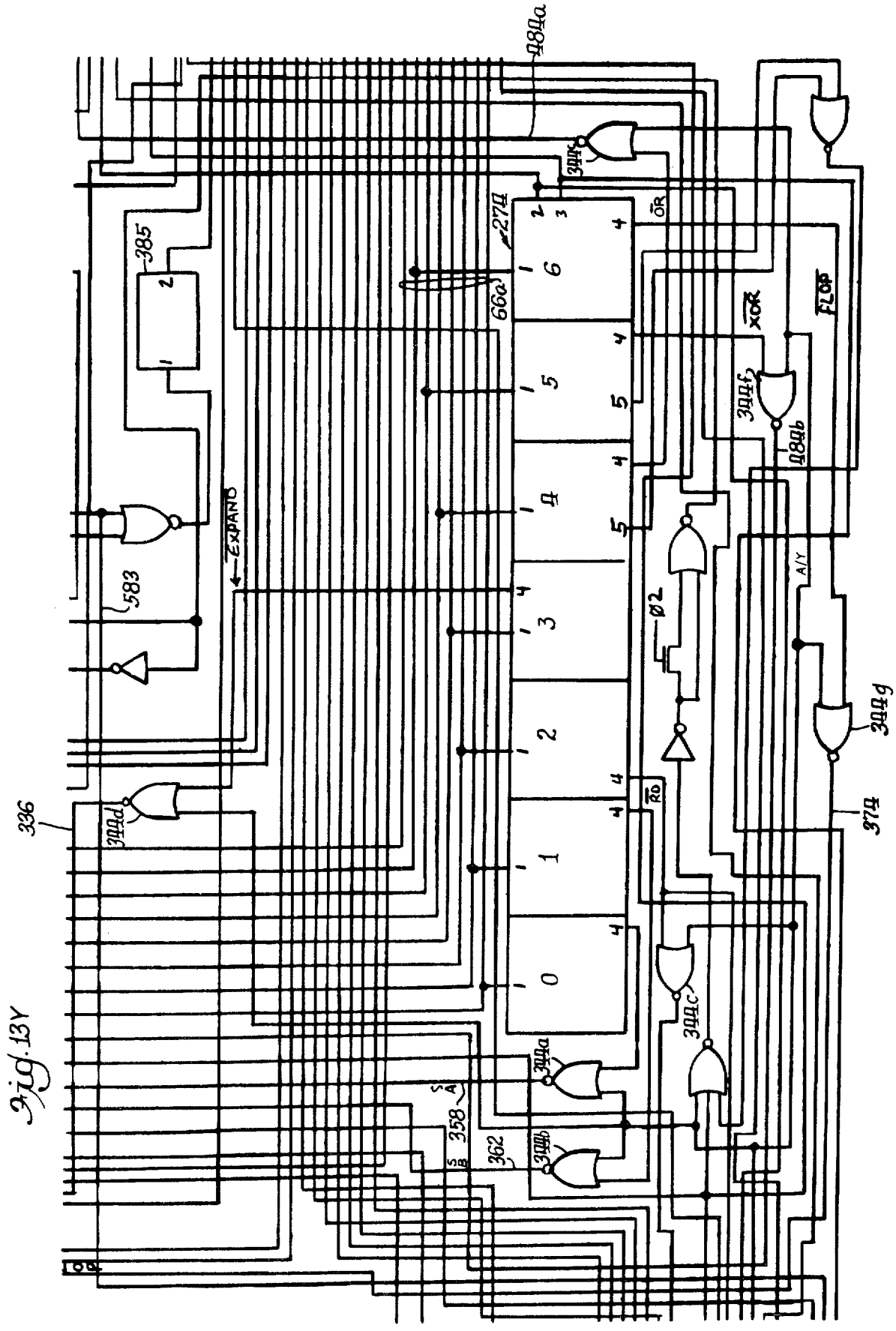
484a
344k
274
385
66a
6
5
4
3
2
1
0
EXPAND
583
336
344d
Ø2
RD
344c
344a
344b
358
362
344f
484b
FLOP
A/Y
344g
374

Fig. 13Y

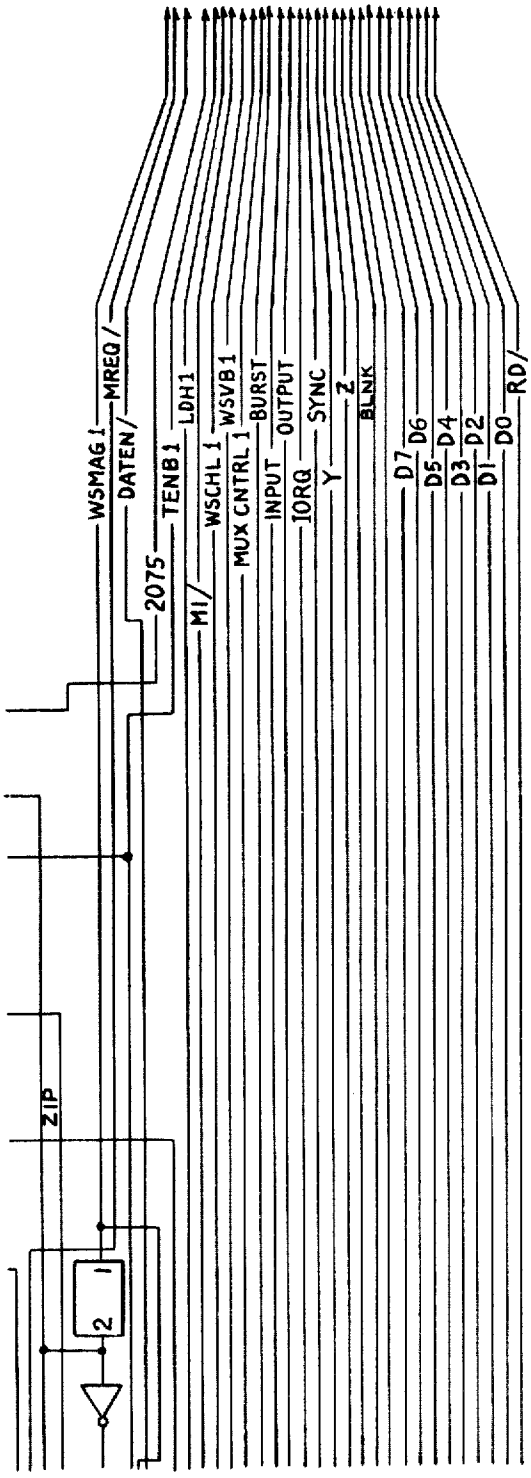
WSMAG 1
MREQ/
DATEN/
2075
TENB 1
LDH1
MI/
WSCHL 1
WSVB 1
MUX CNTRL 1
BURST
INPUT
OUTPUT
IORQ
SYNC
Y
Z
BLNK
D7
D6
D5
D4
D3
D2
D1
D0
RD/
ZIP
1
2

Fig. 13Z.

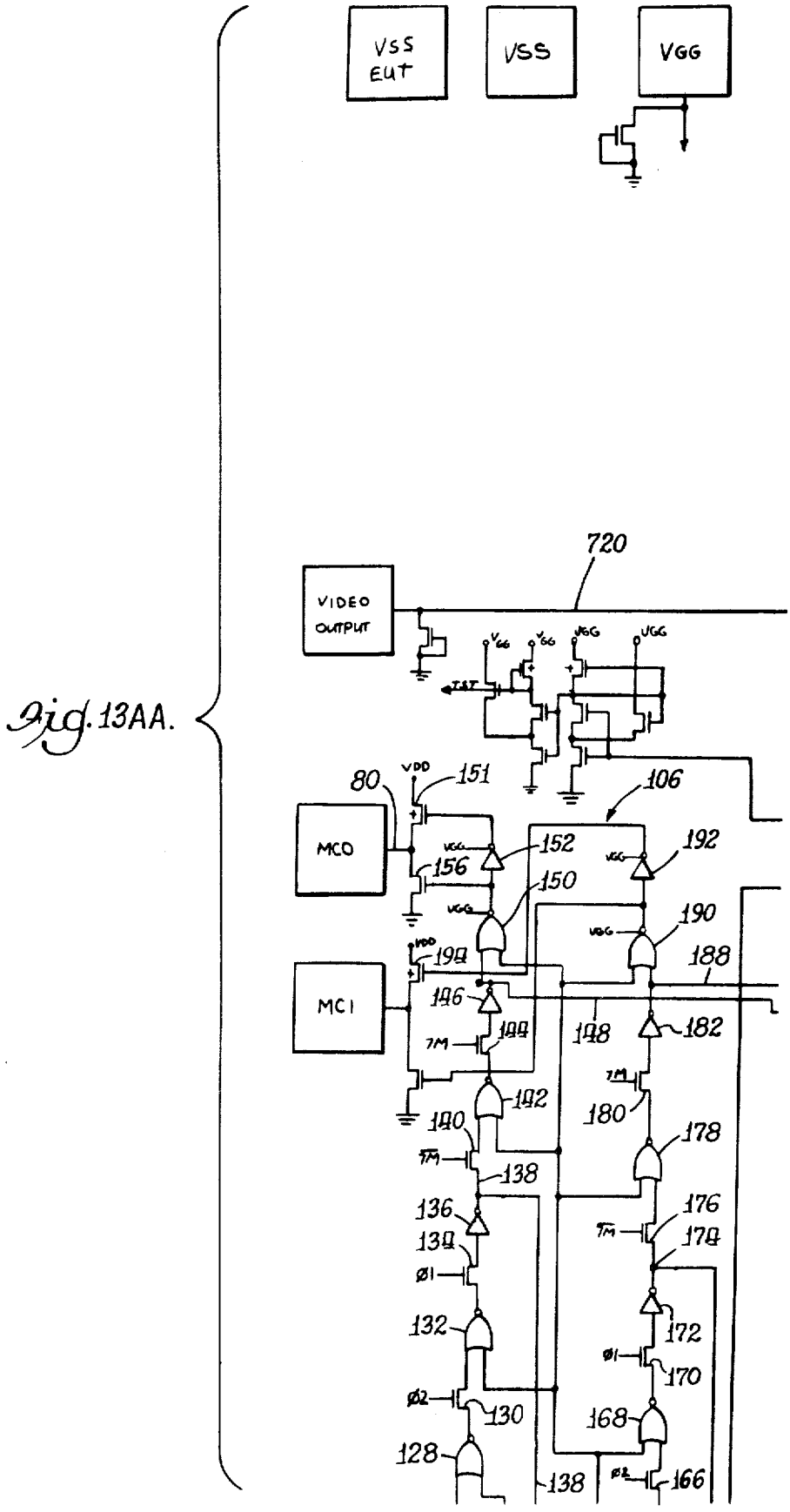
VSS EUT
VSS
VGG
720
VIDEO OUTPUT
80
VDD
151
106
MCO
MC1
152
156
150
192
190
188
194
196
198
182
180
178
176
174
172
170
168
166
192
140
138
136
134
132
130
128
Ø1
Ø2
TM

Fig. 13AA.

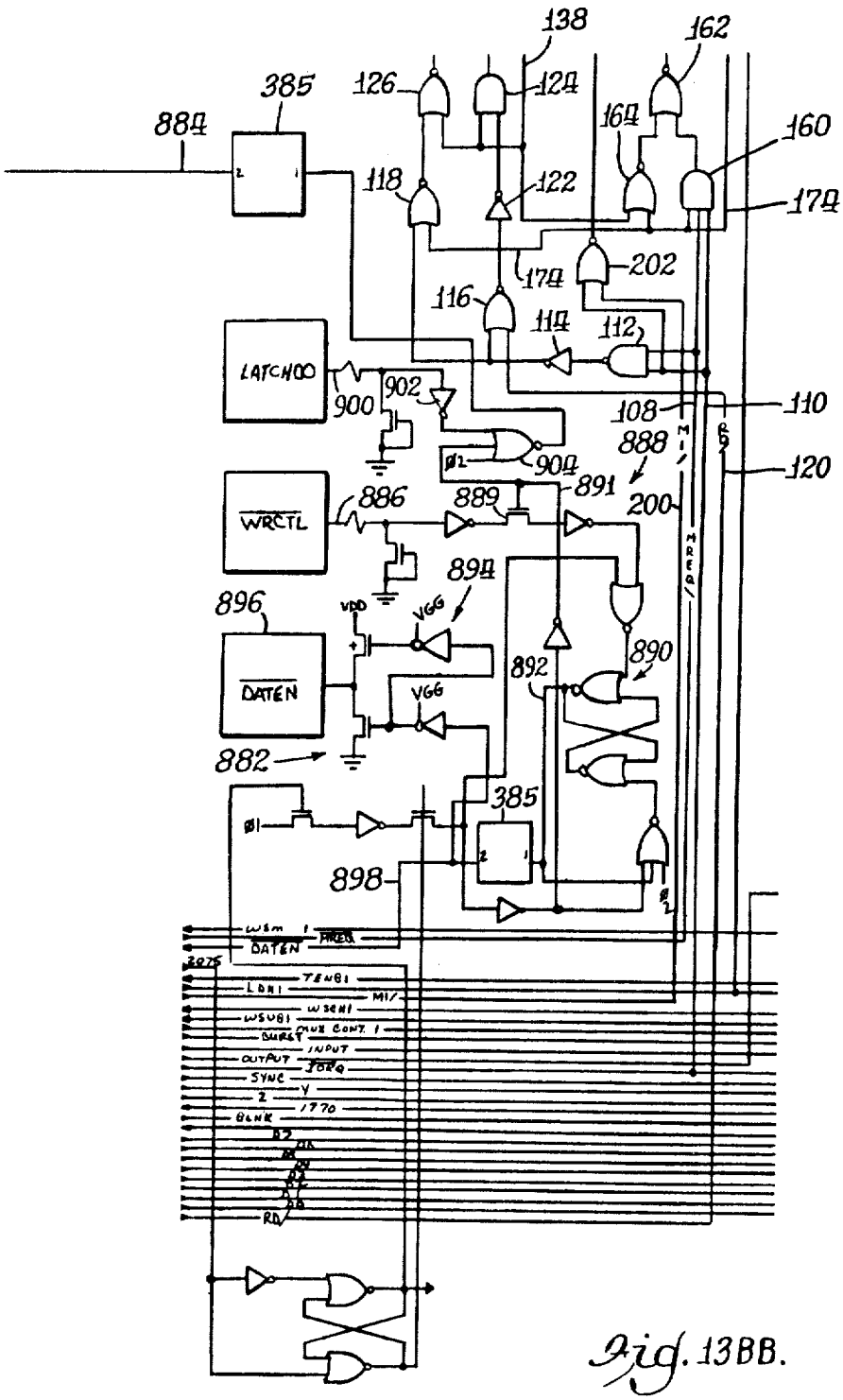
138
162
385
126
124
884
164
160
118
122
174
174
202
116
114
112
LATCH00
900
902
108
110
888
904
120
WRCTL
886
889
891
200
894
896
VDD
VGG
DATEN
892
890
VGG
882
385
898
WSM 1
DATEN
TENB1
LDN1
M1/
WSCH1
WSUB1
MUX CONT. 1
BURST
INPUT
OUTPUT
SYNC
Y
Z
1770
BLNK
RD

Fig. 13BB.

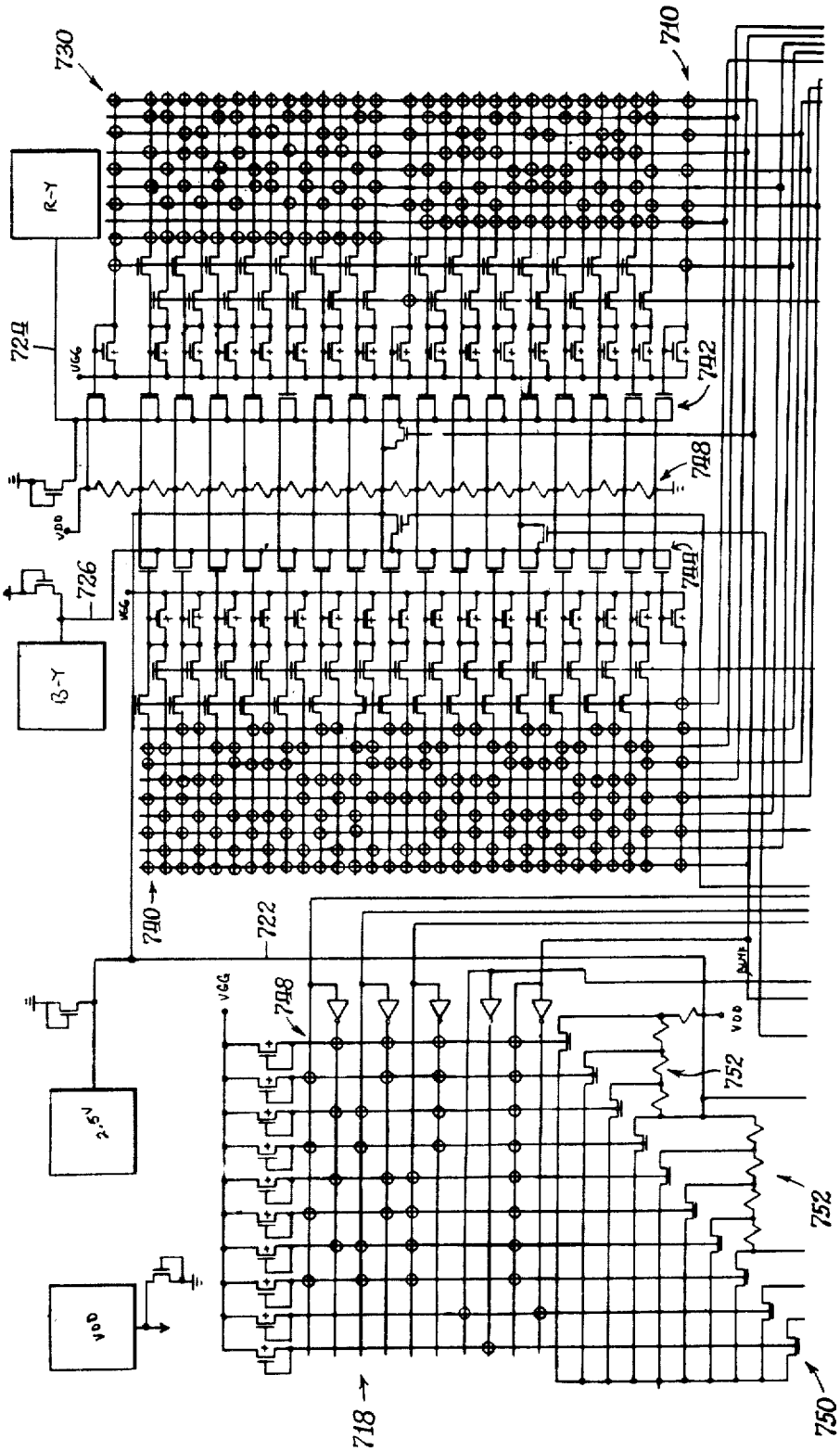

Fig. 13CC.

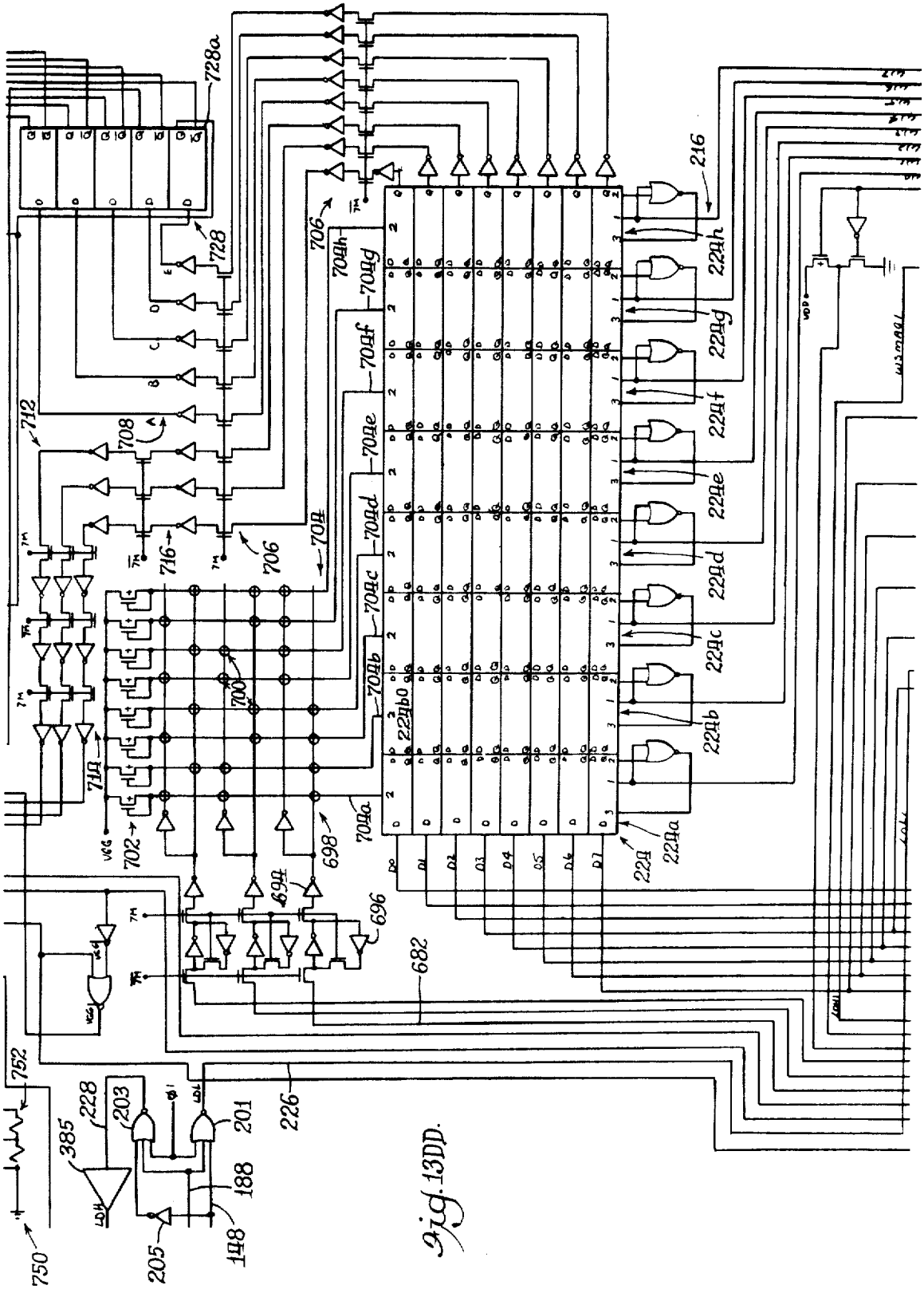

Fig. 13DD.

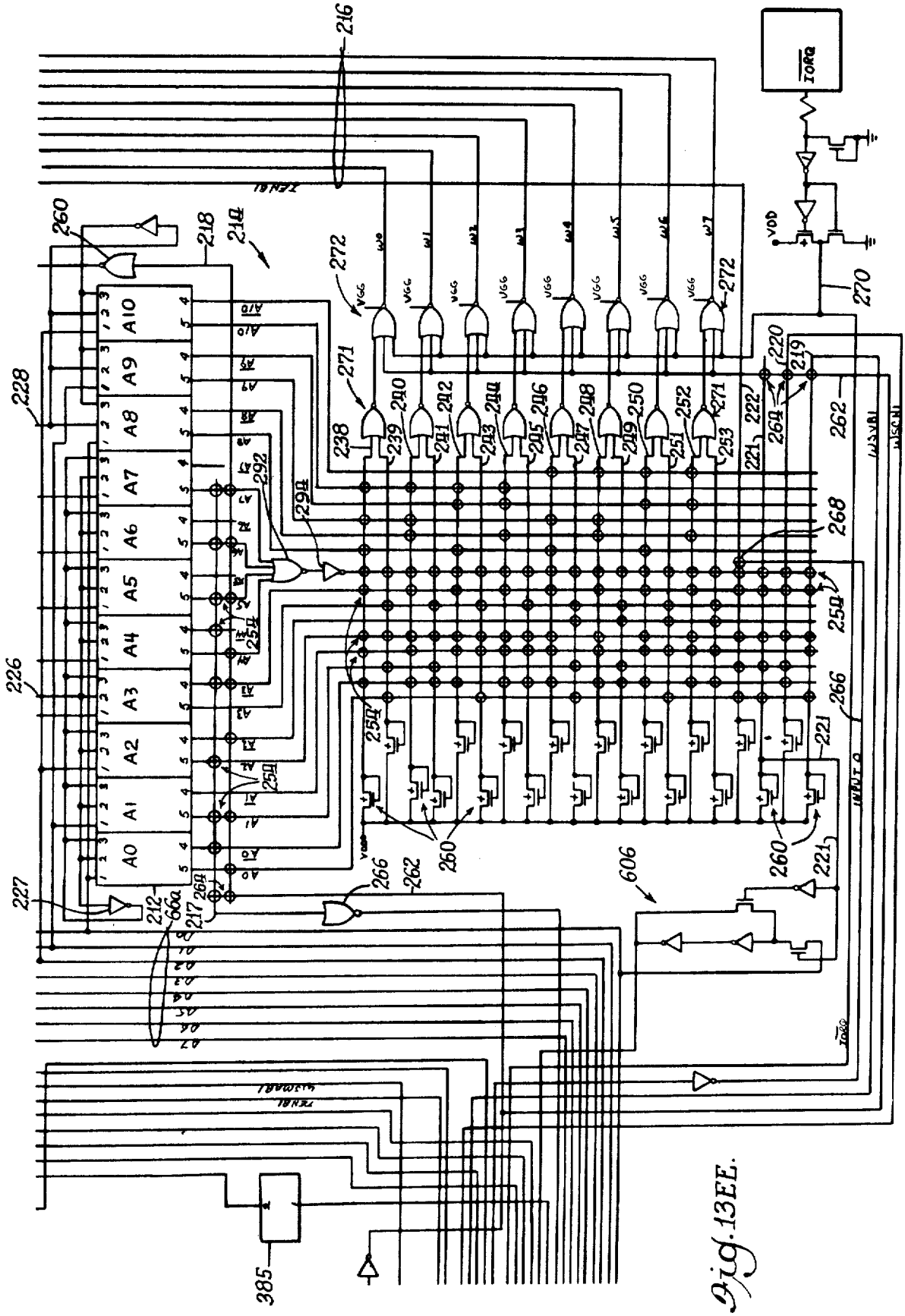
216
IORQ
VDD
270
272
271
238
239
240
241
242
243
244
245
246
247
248
249
250
251
252
253
271
221
222
220
219
264
262
268
254
266
260
221
606
228
226
227
212
66a
217
264
292
294
218
214
260
A0
A1
A2
A3
A4
A5
A6
A7
A8
A9
A10
385

Fig. 13EE.

Fig. 14.

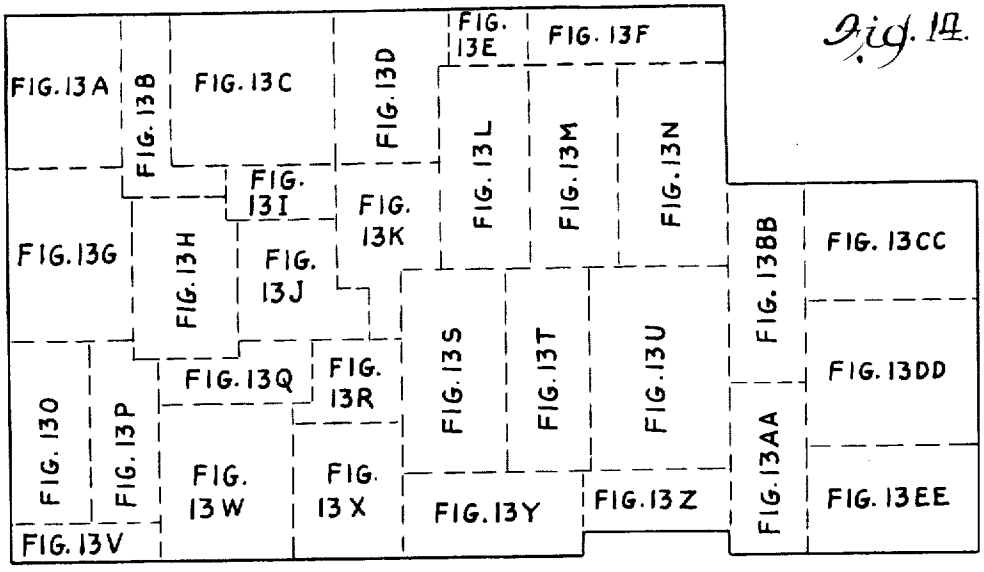

Fig. 46.

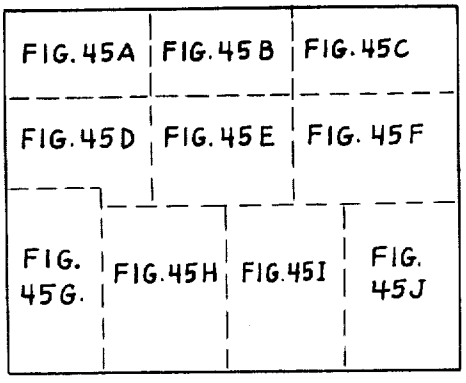

Fig. 74.

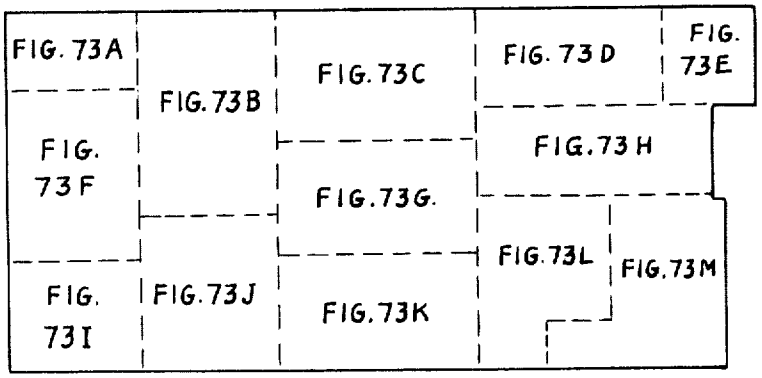

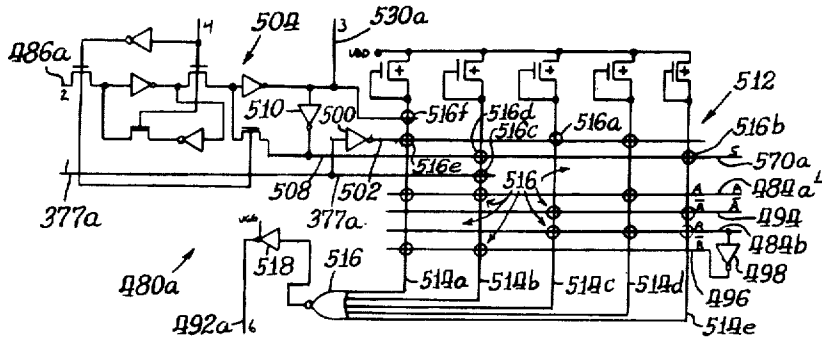

Fig. 25.

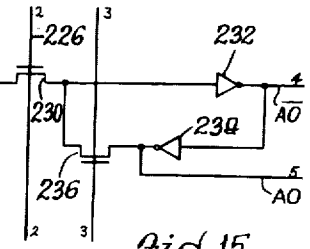

Fig. 15.

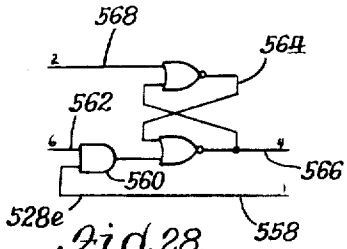

Fig. 28.

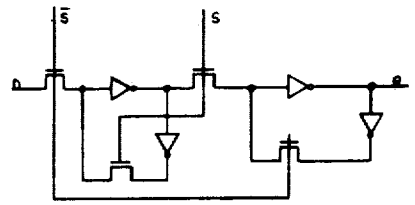

Fig. 23.

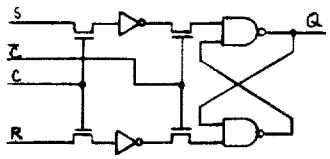

Fig. 38.

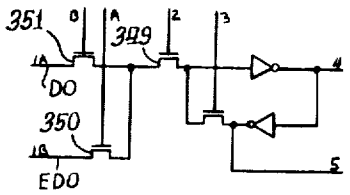

Fig. 20.

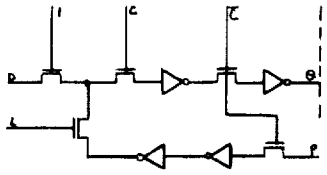

Fig. 30.

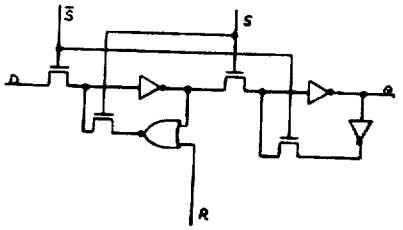

Fig. 21.

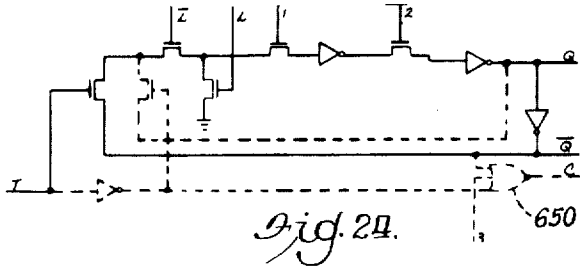

Fig. 24.

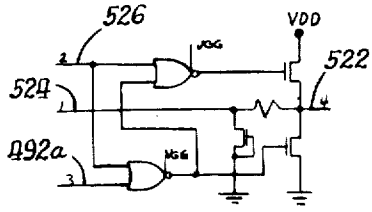

Fig. 26.

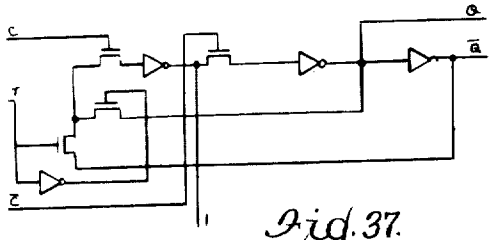

Fig. 37.

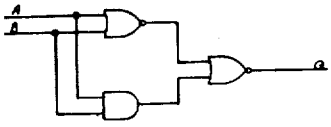

Fig. 33.

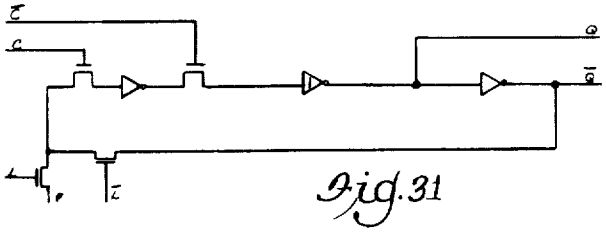

Fig. 31

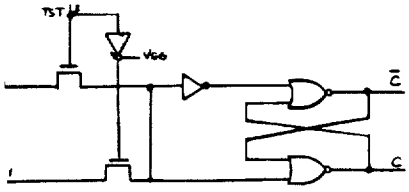

Fig. 39.

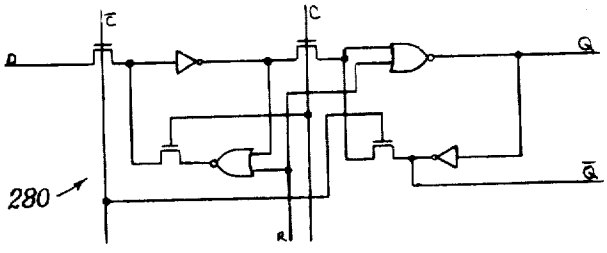

Fig. 19.

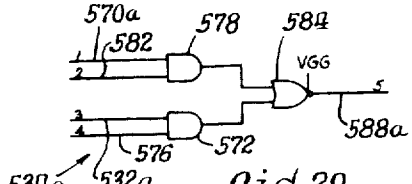

Fig. 29.

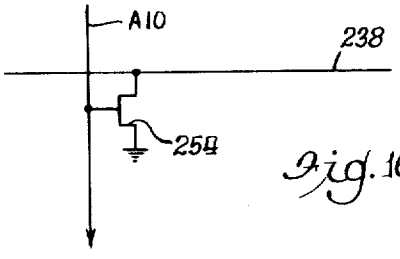

Fig. 16.

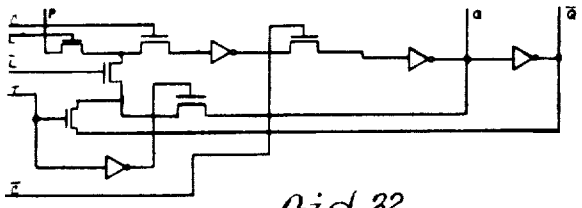

Fig. 32.

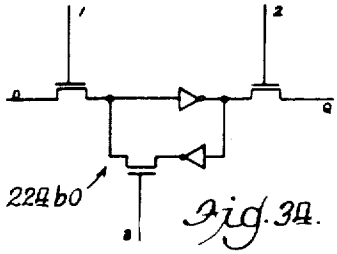

Fig. 34.

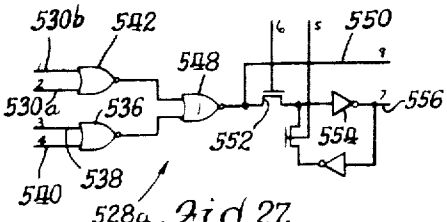

Fig. 27.

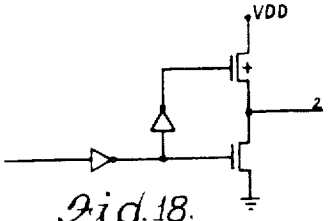

Fig. 18.

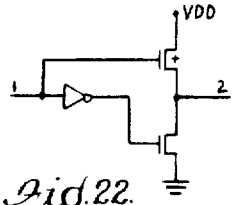

Fig. 22.

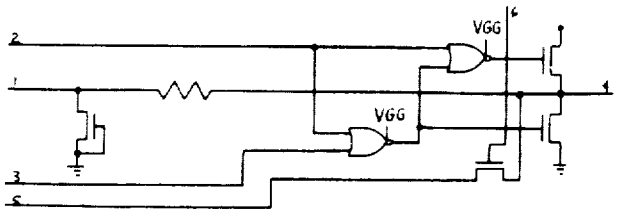

Fig. 17.

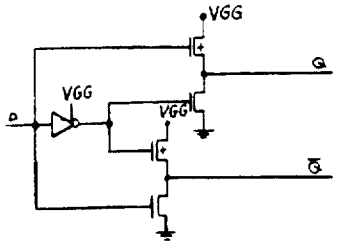

Fig. 35.

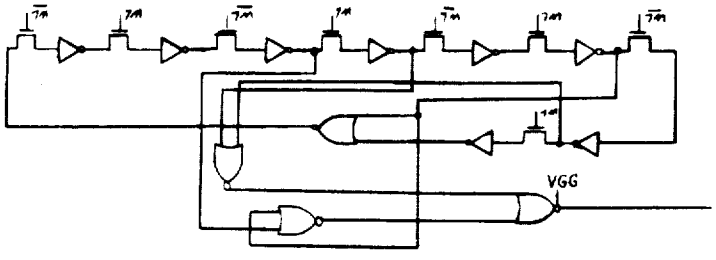

Fig. 36.

Fig. 41.

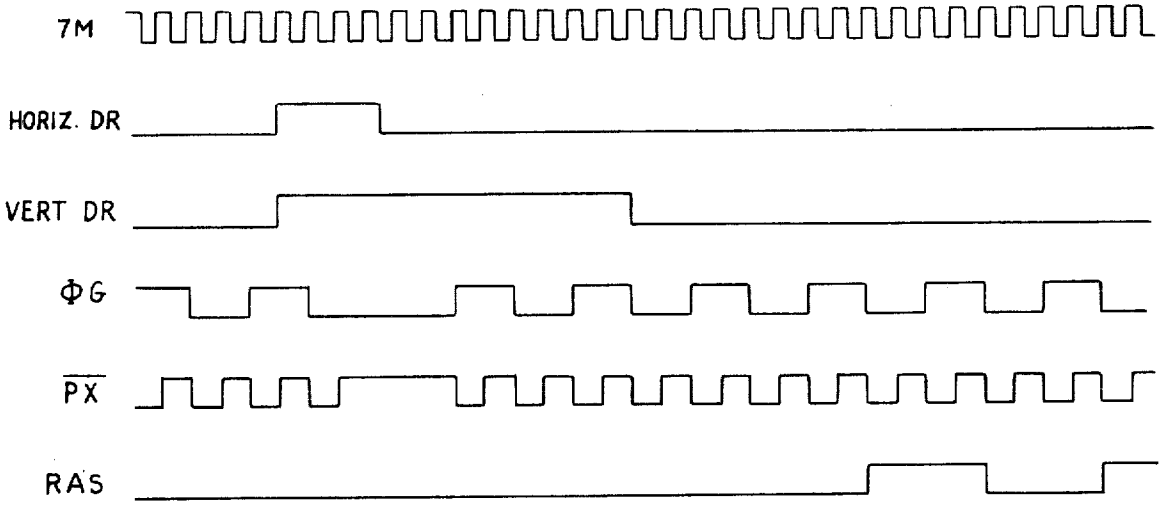
7M
HORIZ. DR
VERT DR
ΦG
PX
RAS

Fig. 43.

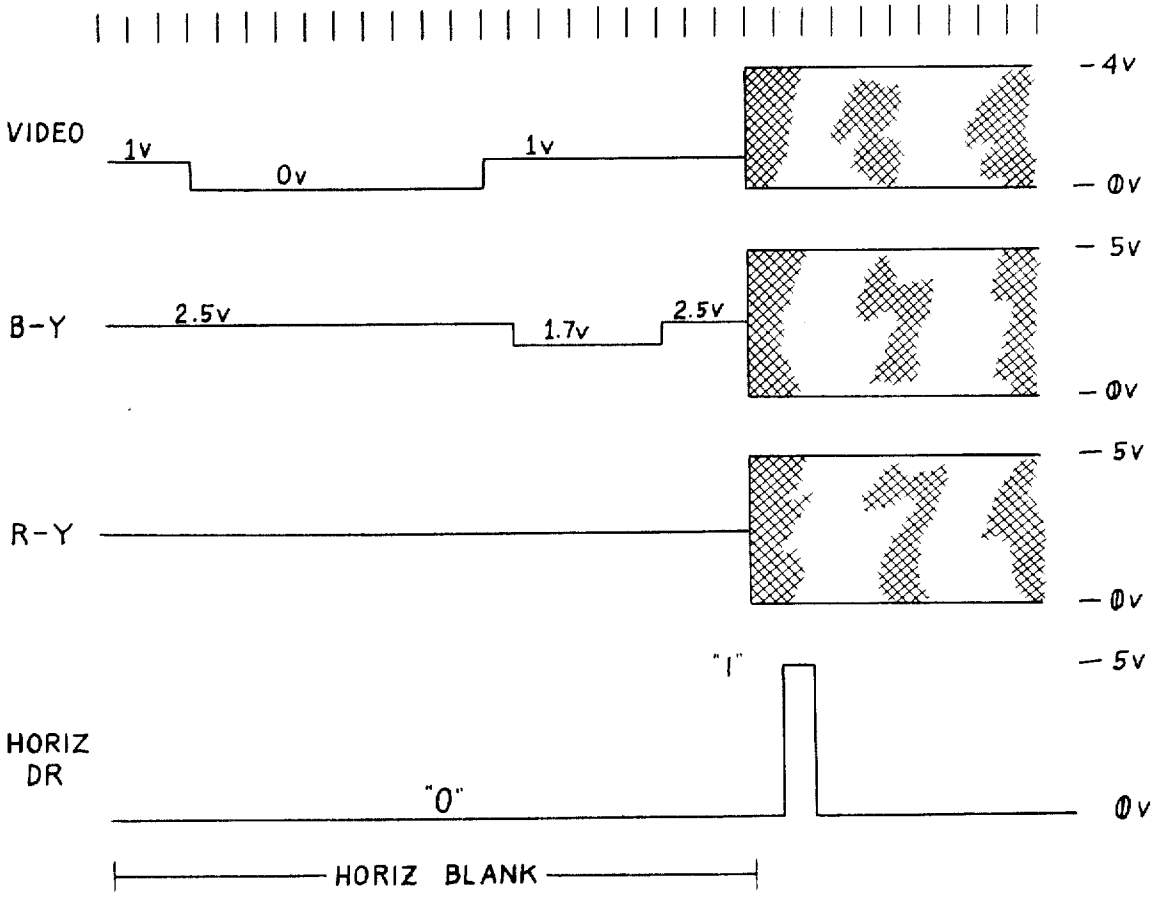
VIDEO
1v
0v
1v
-4v
-0v
B-Y
2.5v
1.7v
2.5v
-5v
-0v
R-Y
-5v
-0v
HORIZ DR
"1"
"0"
-5v
0v
HORIZ BLANK

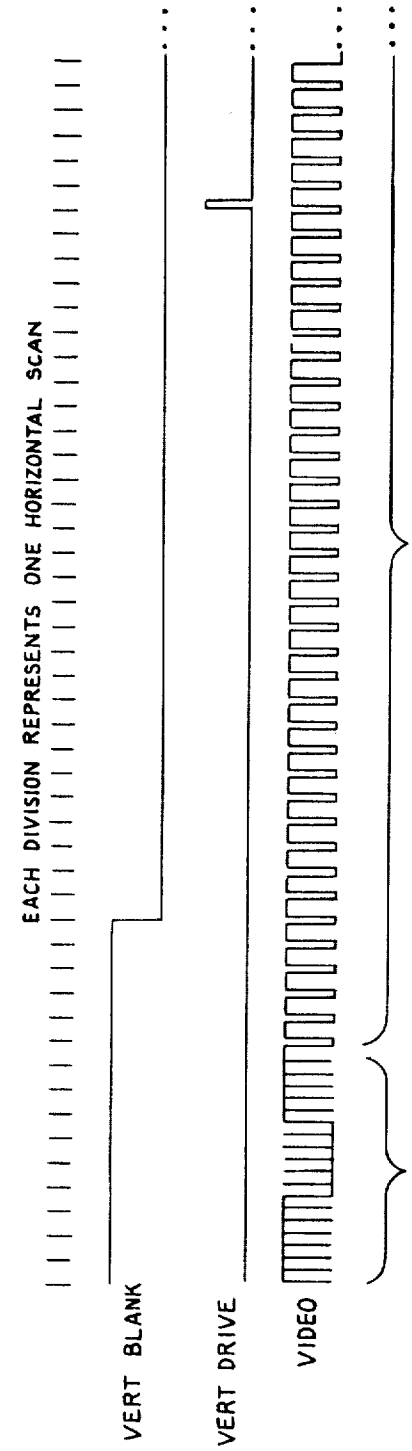
EACH DIVISION REPRESENTS ONE HORIZONTAL SCAN
VERT BLANK
VERT DRIVE
VIDEO
VERTICAL SYNC WITH EQUALIZATION PULSES
HORIZONTAL SYNCS

Fig. 42.

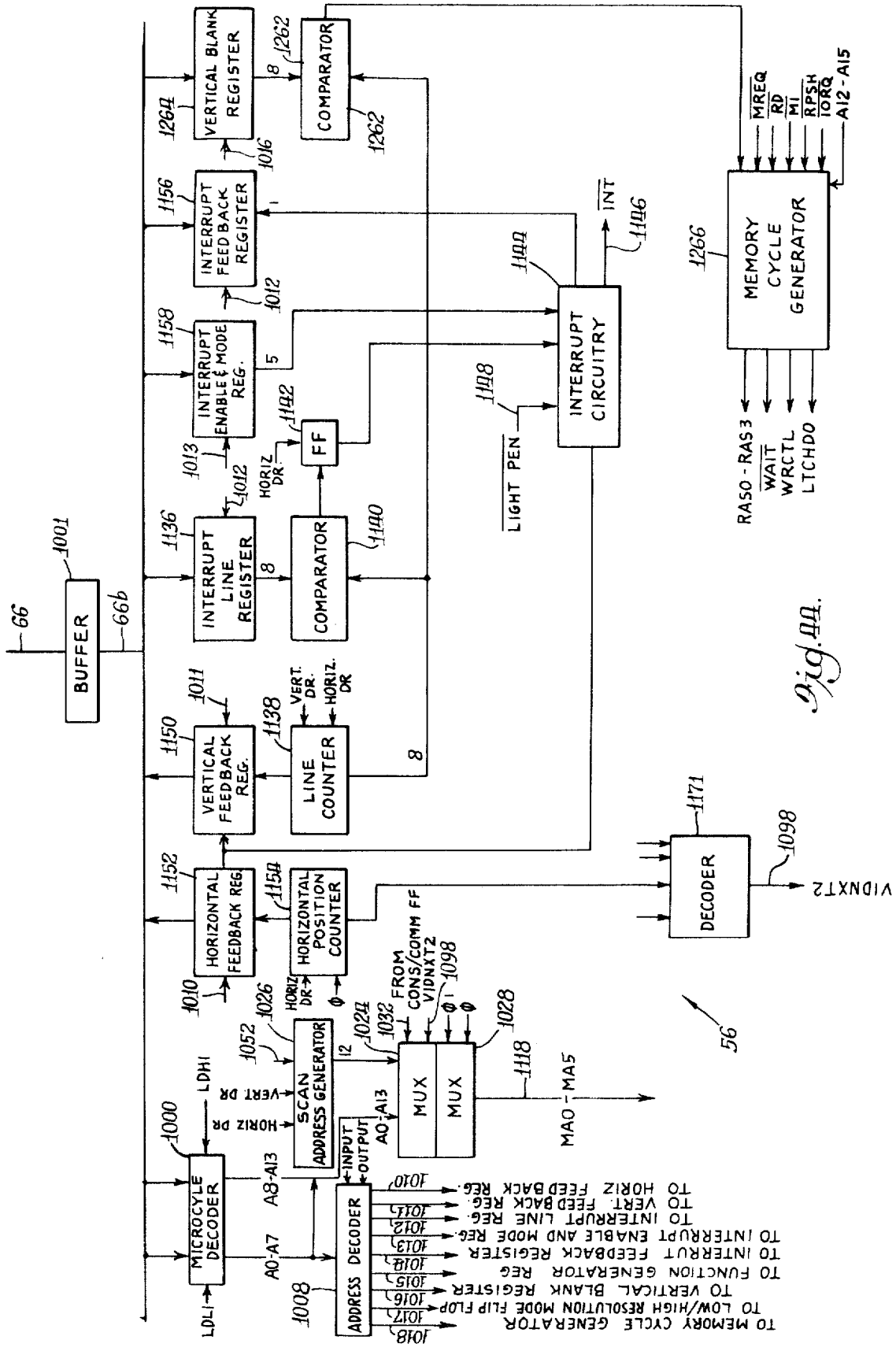
BUFFER
66
66b
1001
VERTICAL BLANK REGISTER
1264
1016
COMPARATOR
1262
INTERRUPT FEEDBACK REGISTER
1156
1012
INTERRUPT ENABLE & MODE REG.
1158
1013
FF
1142
HORIZ DR
INTERRUPT LINE REGISTER
1136
COMPARATOR
1140
INTERRUPT CIRCUITRY
1144
1146
INT
1148
LIGHT PEN
MEMORY CYCLE GENERATOR
1266
MREQ
RD
MI
RPSH
IORQ
A12-A15
RAS0-RAS3
WAIT
WRCTL
LTCHD0
VERTICAL FEEDBACK REG.
1150
1011
LINE COUNTER
1138
VERT. DR.
HORIZ. DR
HORIZONTAL FEEDBACK REG.
1152
1010
HORIZONTAL POSITION COUNTER
1154
DECODER
1171
1098
VIDNXT2
SCAN ADDRESS GENERATOR
1052
1026
HORIZ DR
VERT DR
HORIZ DR
MUX
MUX
1024
1032
1028
1118
FROM CONS/COMM FF
VIDNXT2
MA0-MA5
A0-A13
MICROCYLE DECODER
1000
LDH1
LDL1
A8-A13
A0-A7
ADDRESS DECODER
1008
INPUT
OUTPUT
TO HORIZ FEEDBACK REG.
TO VERT. FEEDBACK REG.
TO INTERRUPT LINE REG.
TO INTERRUPT ENABLE AND MODE REG.
TO INTERRUT FEEDBACK REGISTER
TO FUNCTION GENERATOR REG
TO VERTICAL BLANK REGISTER
TO LOW/HIGH RESOLUTION MODE FLIP FLOP
TO MEMORY CYCLE GENERATOR
56

Fig. 44.

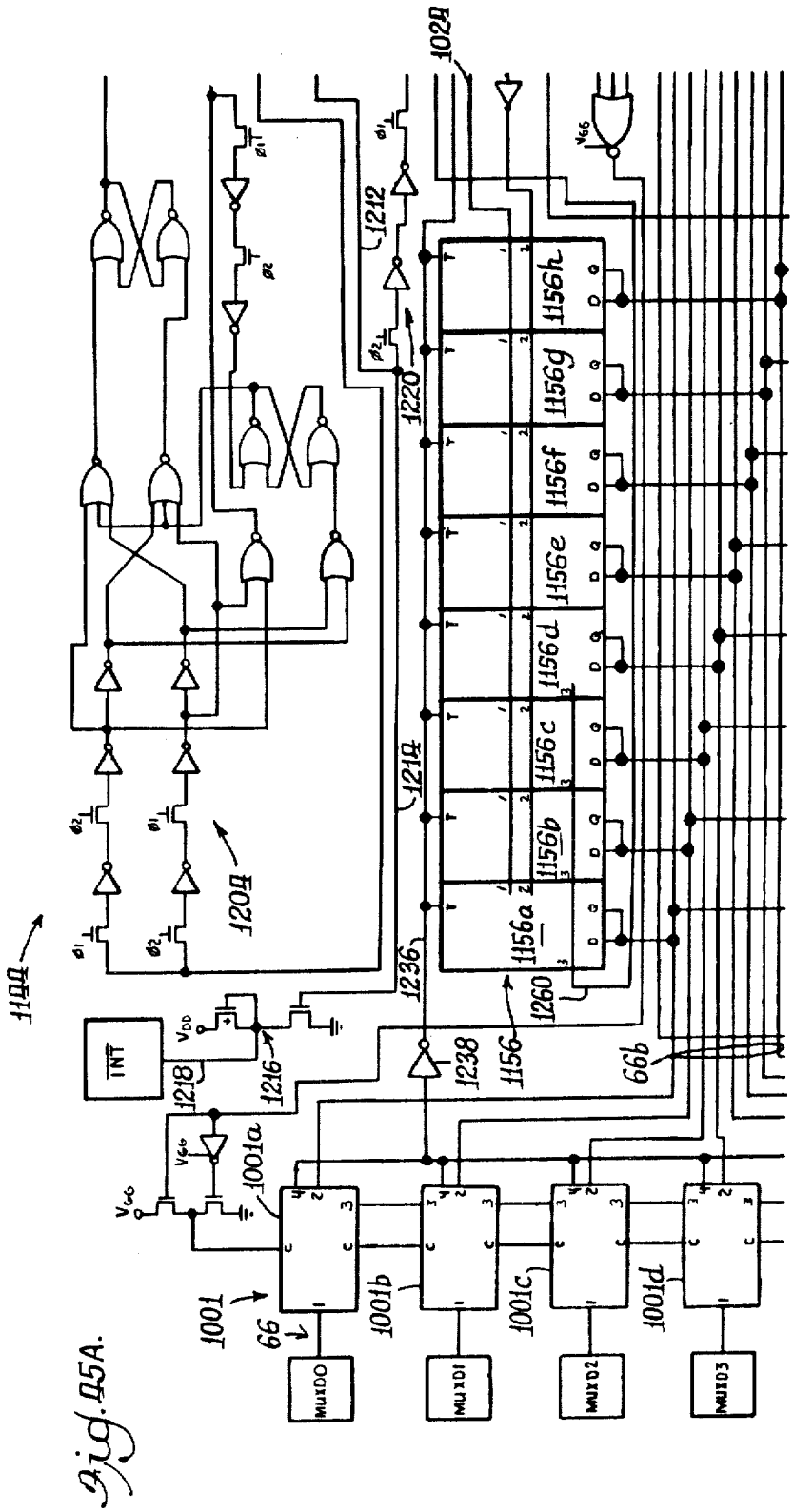
1144
1204
1212
1220
1214
1236
1238
1156
1260
1156a
1156b
1156c
1156d
1156e
1156f
1156g
1156h
1216
1218
INT
1001
1001a
1001b
1001c
1001d
66
66b
MUXD0
MUXD1
MUXD2
MUXD3

Fig. 45A.

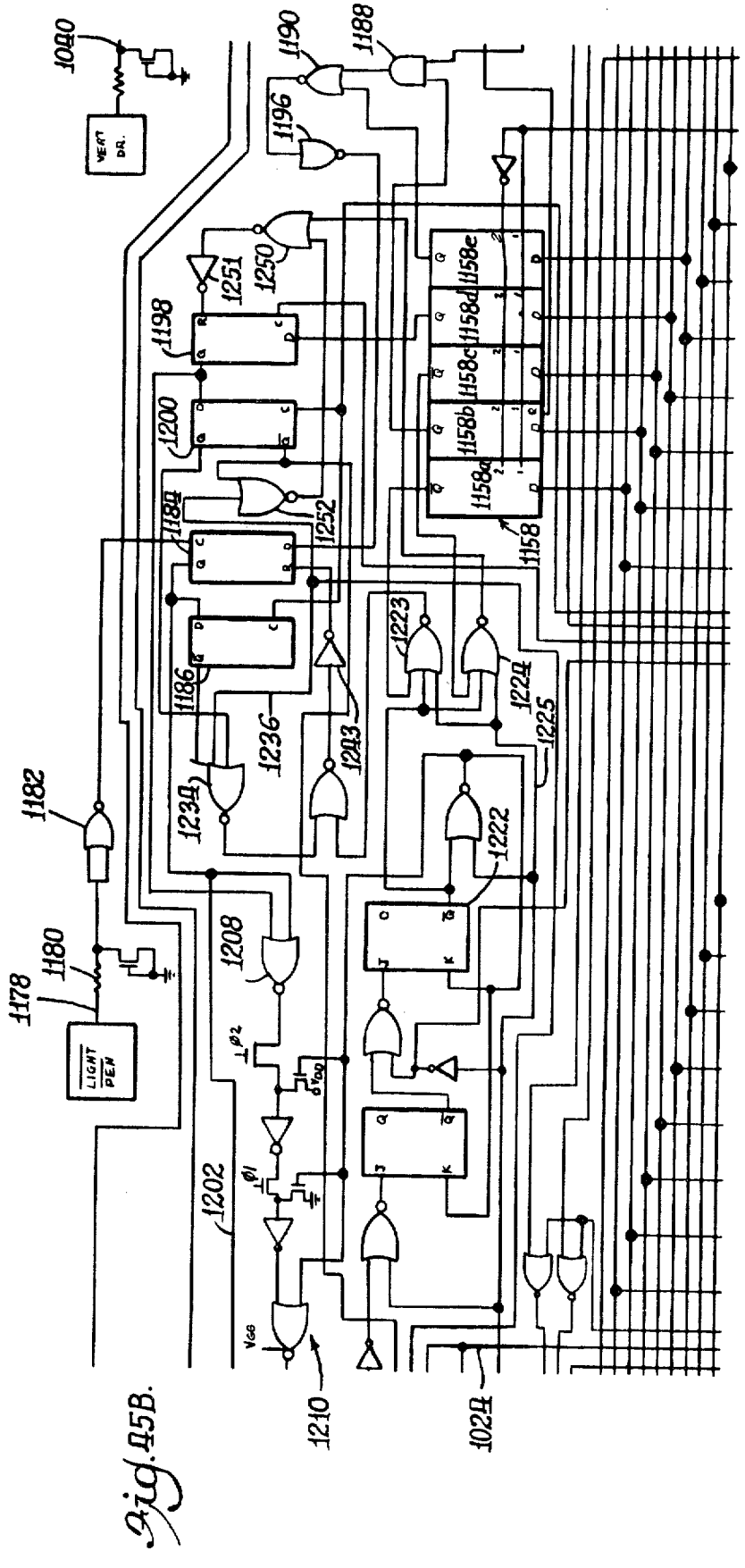
1080
VERT DR.
1190
1188
1196
1251
1250
1198
1200
1158a
1158b
1158c
1158d
1158e
1158
1184
1252
1186
1223
1224
1225
1236
1203
1234
1222
1182
1208
1180
1178
LIGHT PEN
1202
1210
1024

Fig. 45B.

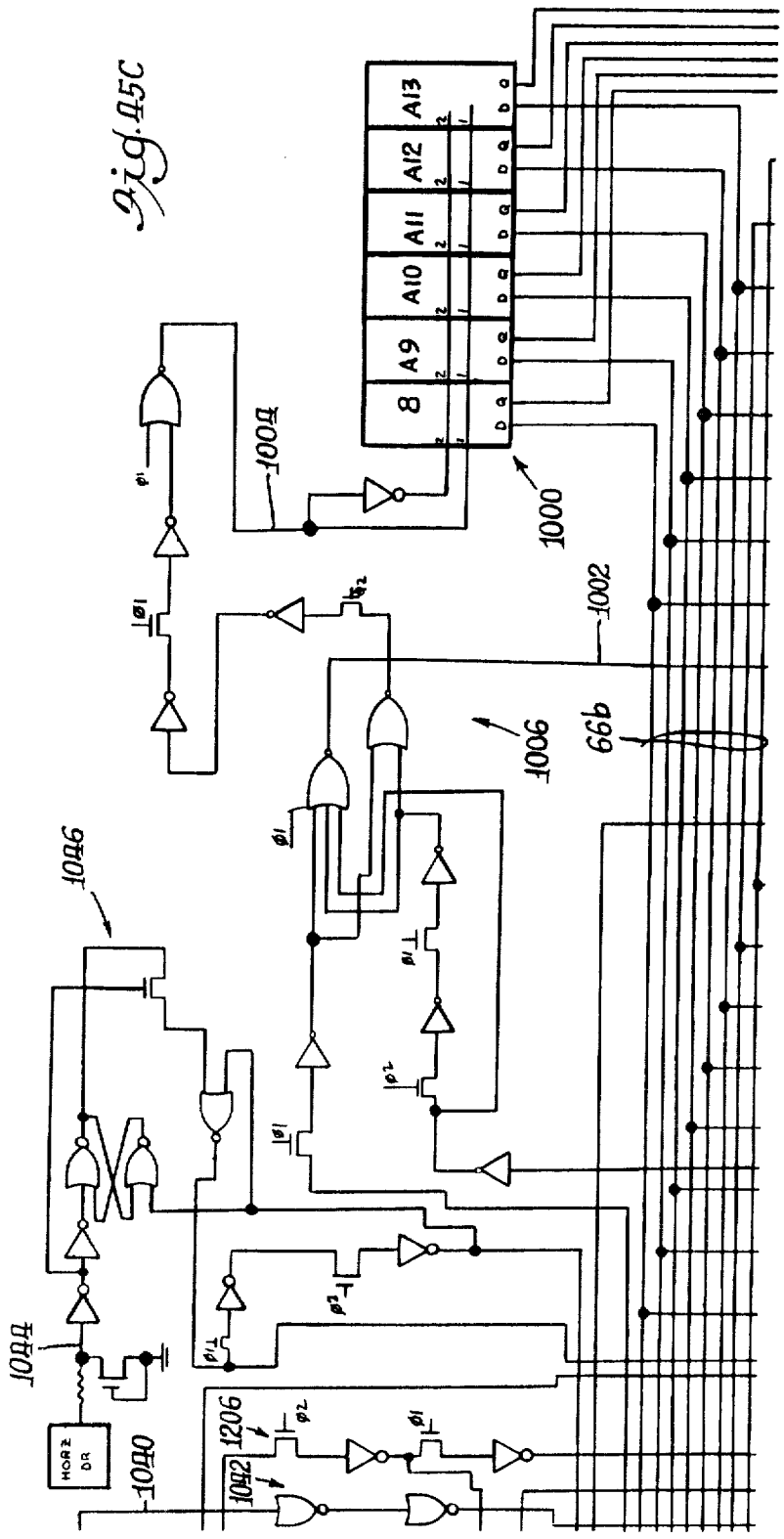
A13
A12
A11
A10
A9
8
1000
1002
1004
1006
66b
1046
1044
1040
1042
1206
HORZ DR

Fig. 45C

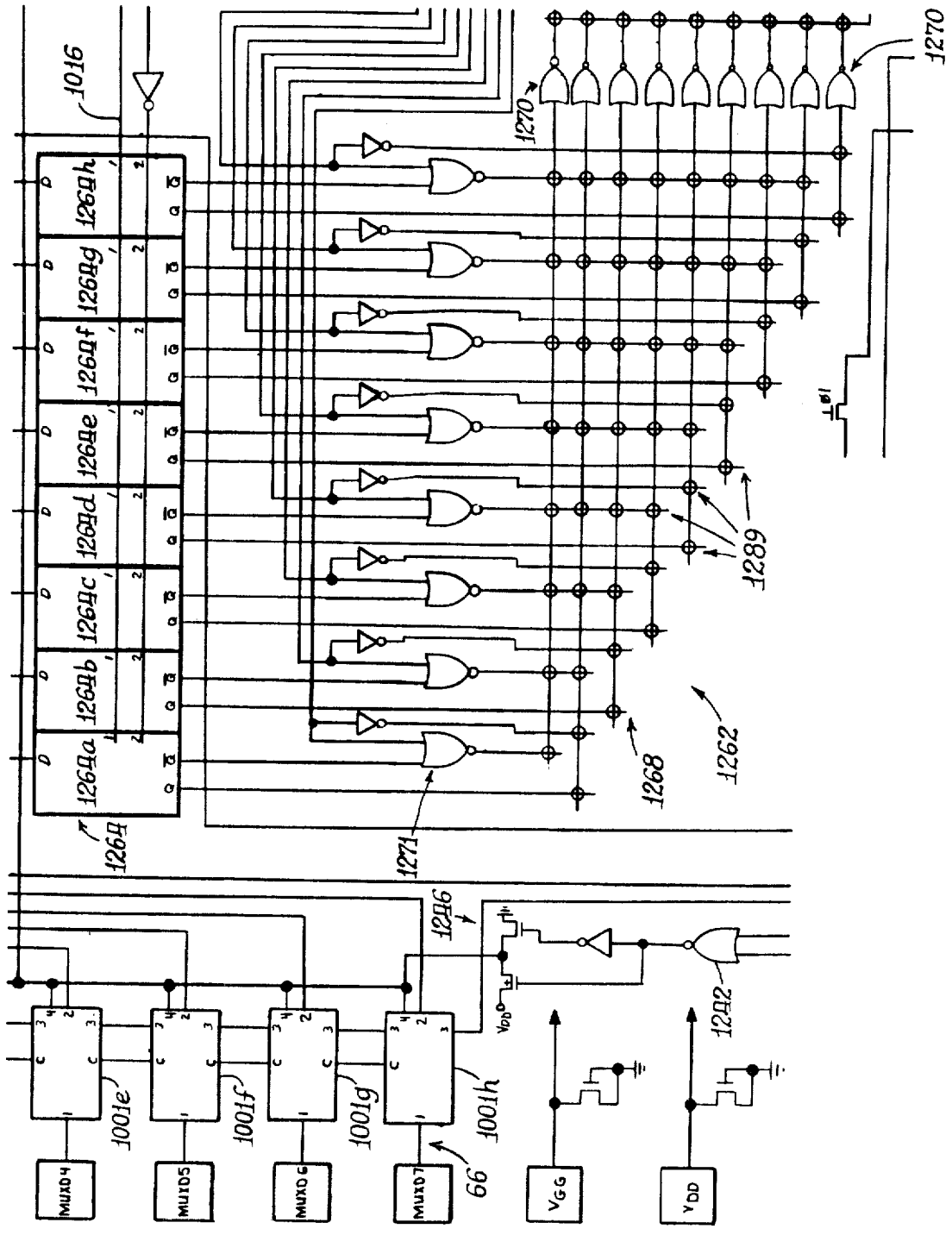
1016
1264h
1264g
1264f
1264e
1264d
1264c
1264b
1264a
1264
1270
1270
1289
1268
1262
1271
1266
1282
1001e
1001f
1001g
1001h
MUX04
MUX05
MUX06
MUX07
99
VGG
VDD

Fig. 45D

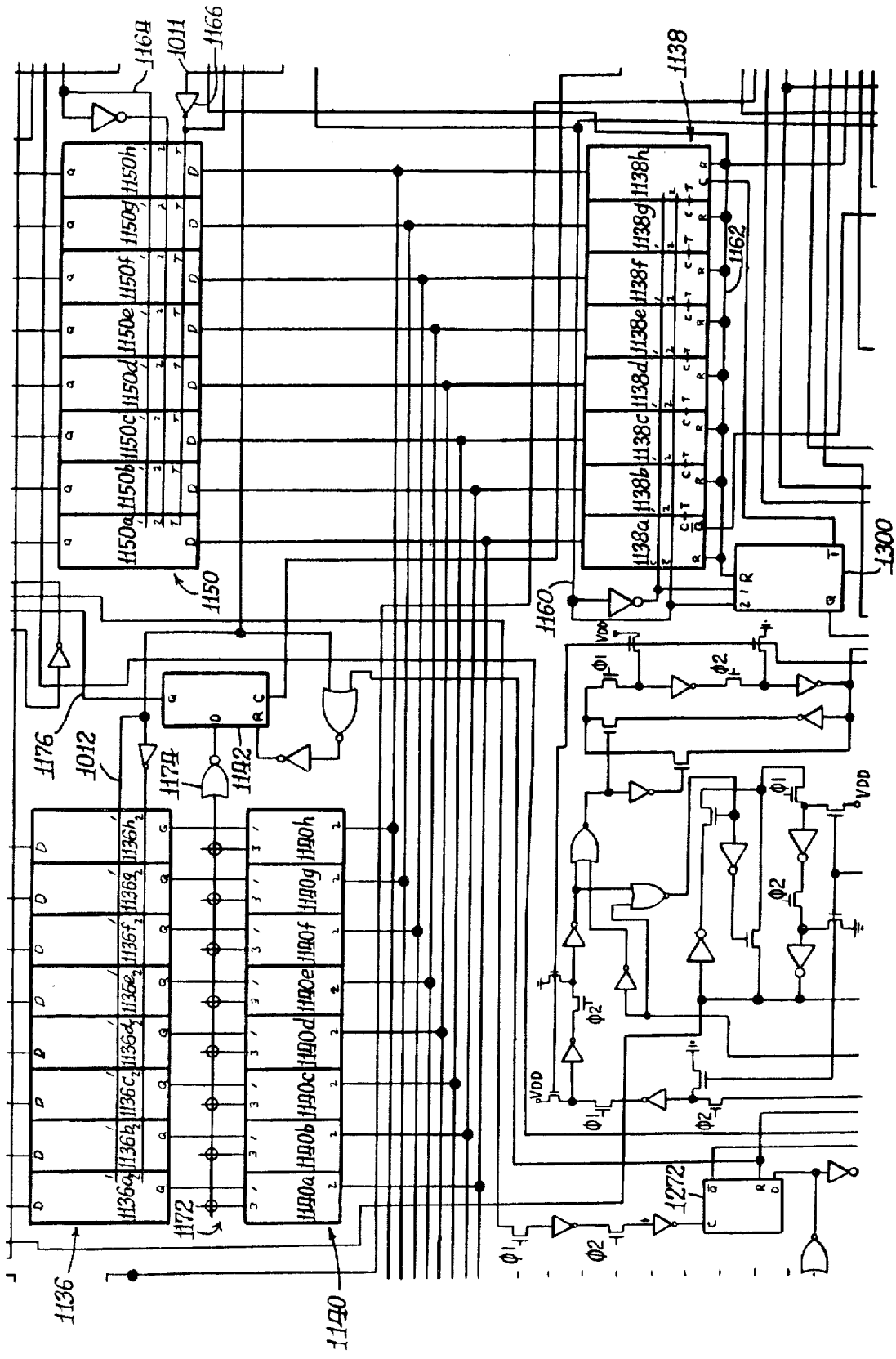
1164
1011
1166
1138
1150a
1150b
1150c
1150d
1150e
1150f
1150g
1150h
1150
1138a
1138b
1138c
1138d
1138e
1138f
1138g
1138h
1162
1160
1300
1176
1012
1174
1142
1136a
1136b
1136c
1136d
1136e
1136f
1136g
1136h
1140a
1140b
1140c
1140d
1140e
1140f
1140g
1140h
1172
1136
1140
1272
VDD
Φ1
Φ2

Fig. 45E

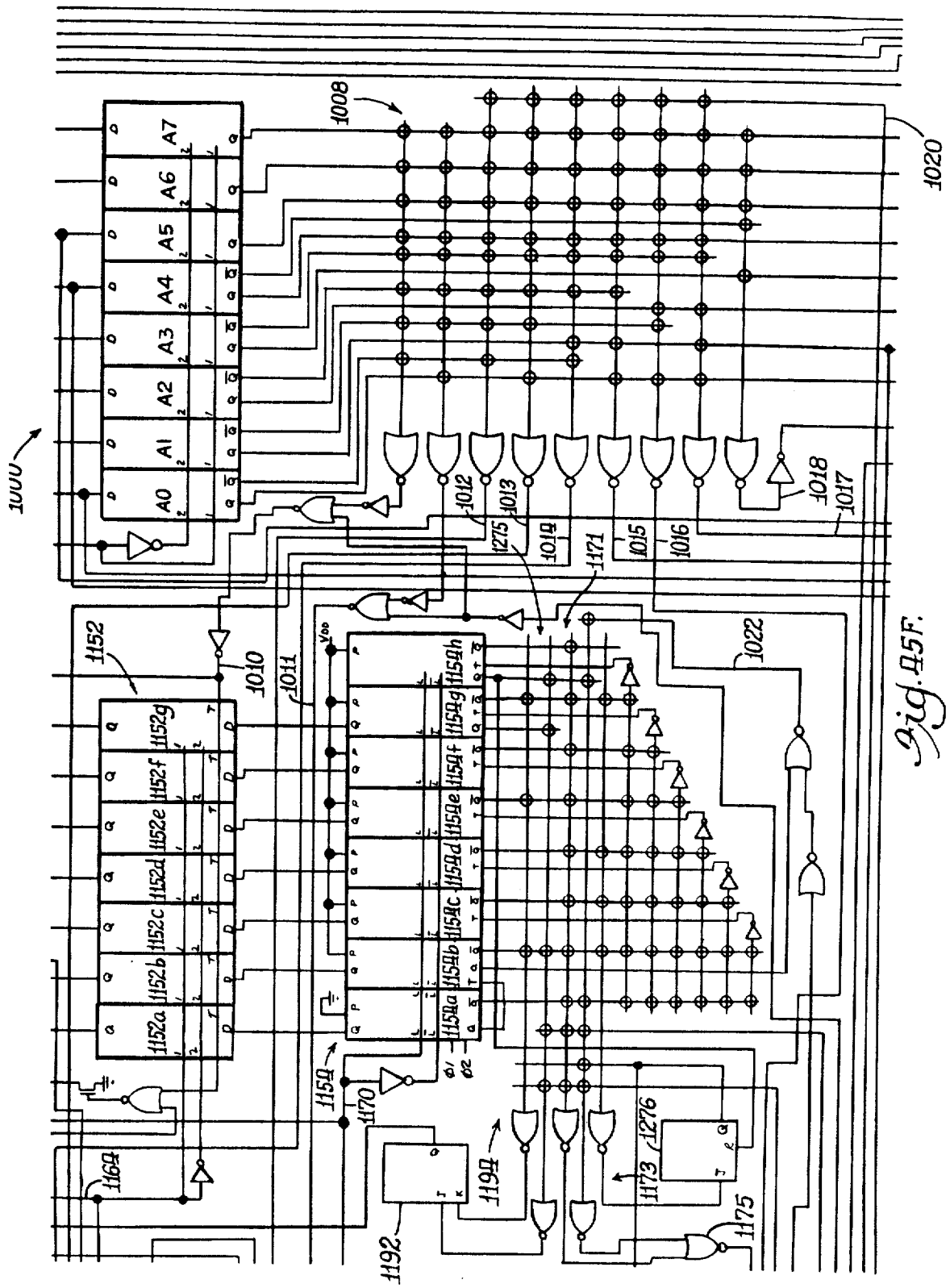
1000
1008
1020
A0
A1
A2
A3
A4
A5
A6
A7
1012
1013
1014
1015
1016
1017
1018
1275
1171
1022
1010
1011
1152
1152a
1152b
1152c
1152d
1152e
1152f
1152g
1159a
1159b
1159c
1159d
1159e
1159f
1159g
1159h
1150
1170
1169
1190
1192
1173
1276
1175

Fig. 45F.

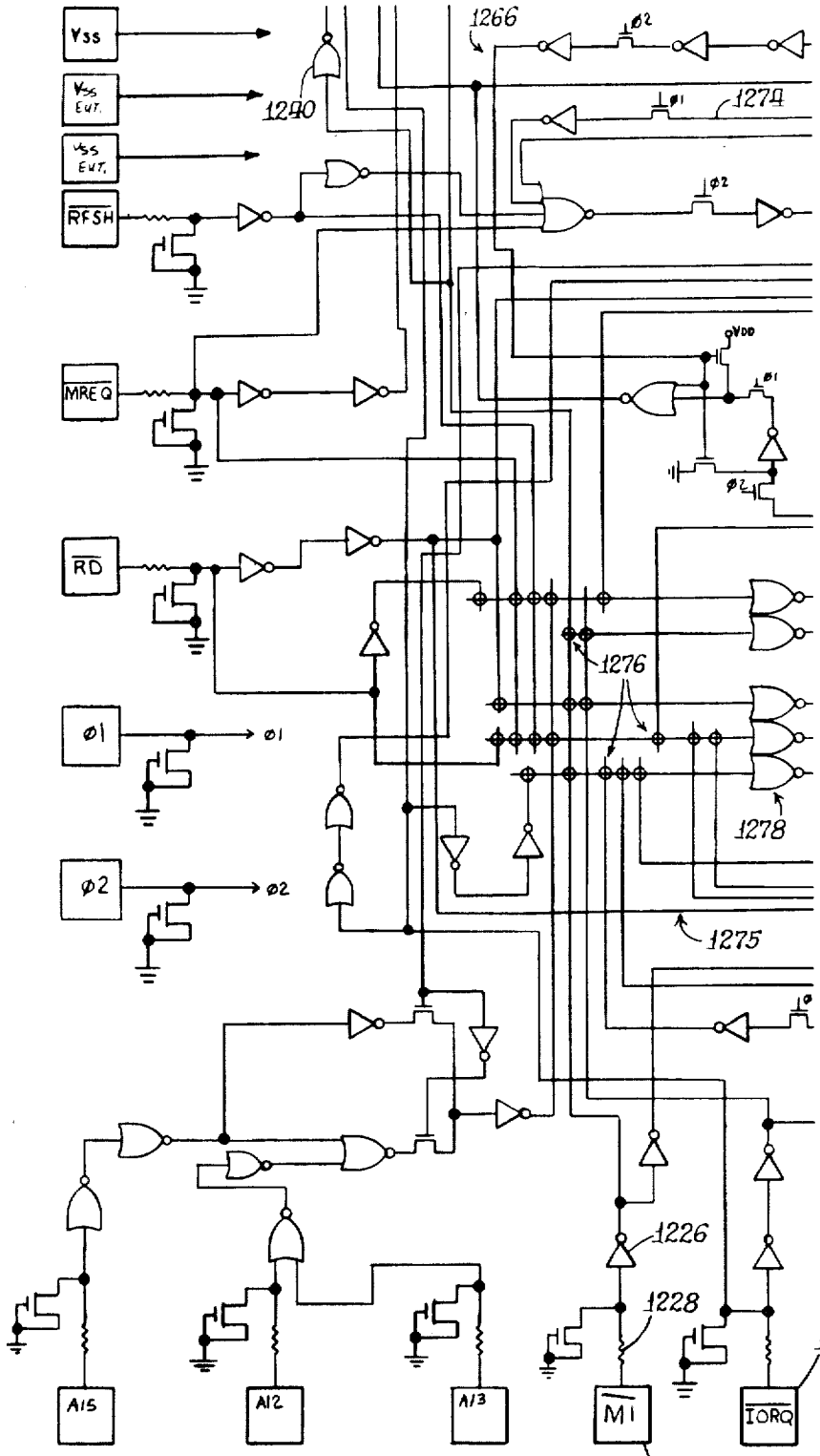
Vss
Vss EXT.
Vss EXT.
RFSH
MREQ
RD
Ø1
Ø2
1240
1266
1274
1276
1278
1275
1226
1228
1244
1230
A15
A12
A13
M1
IORQ

Fig. 45G.

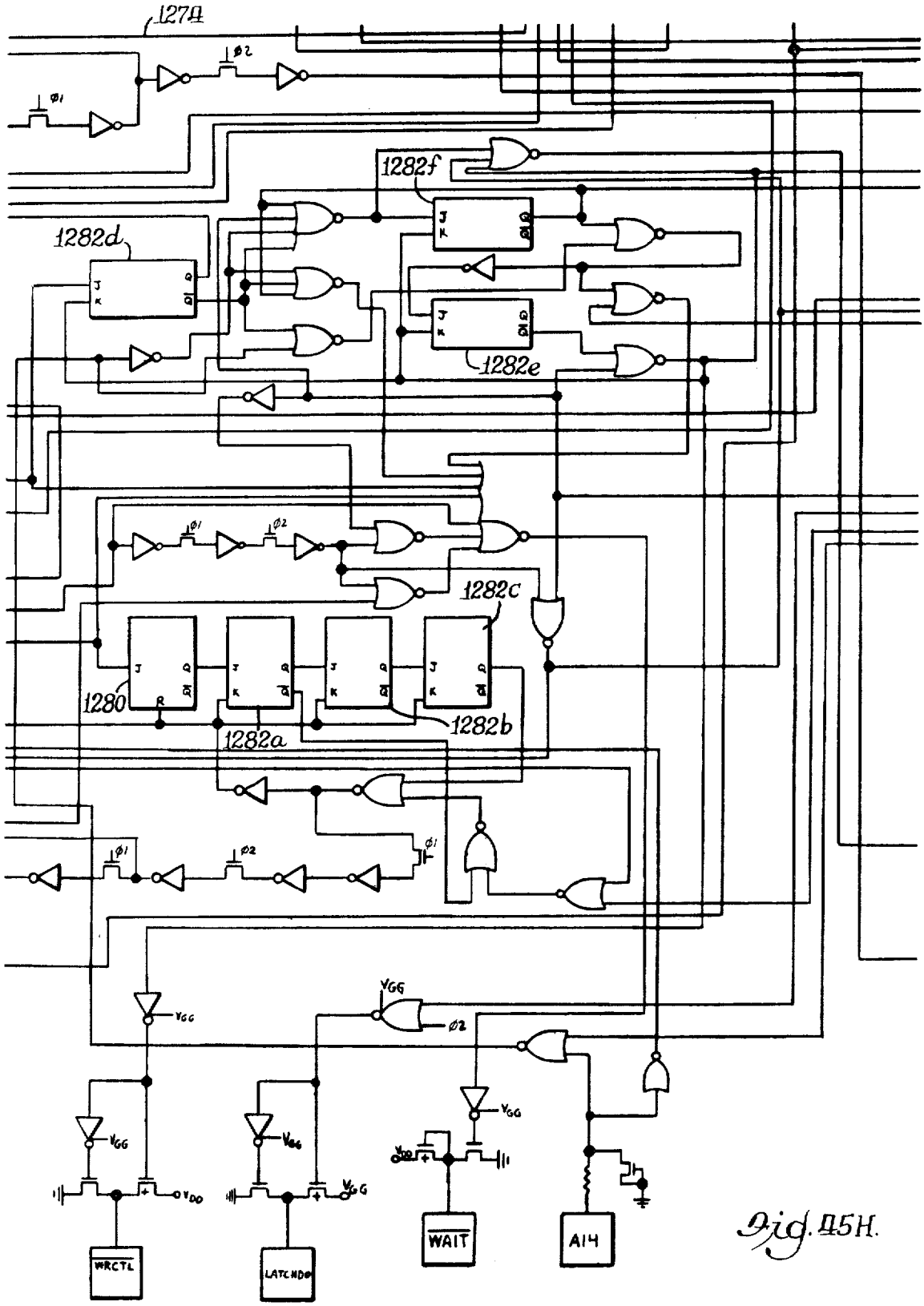
1274
1282f
1282d
1282e
1282c
1280
1282b
1282a
WRCTL
LATCHDO
WAIT
A14

Fig. 45H.

Fig. 45I.

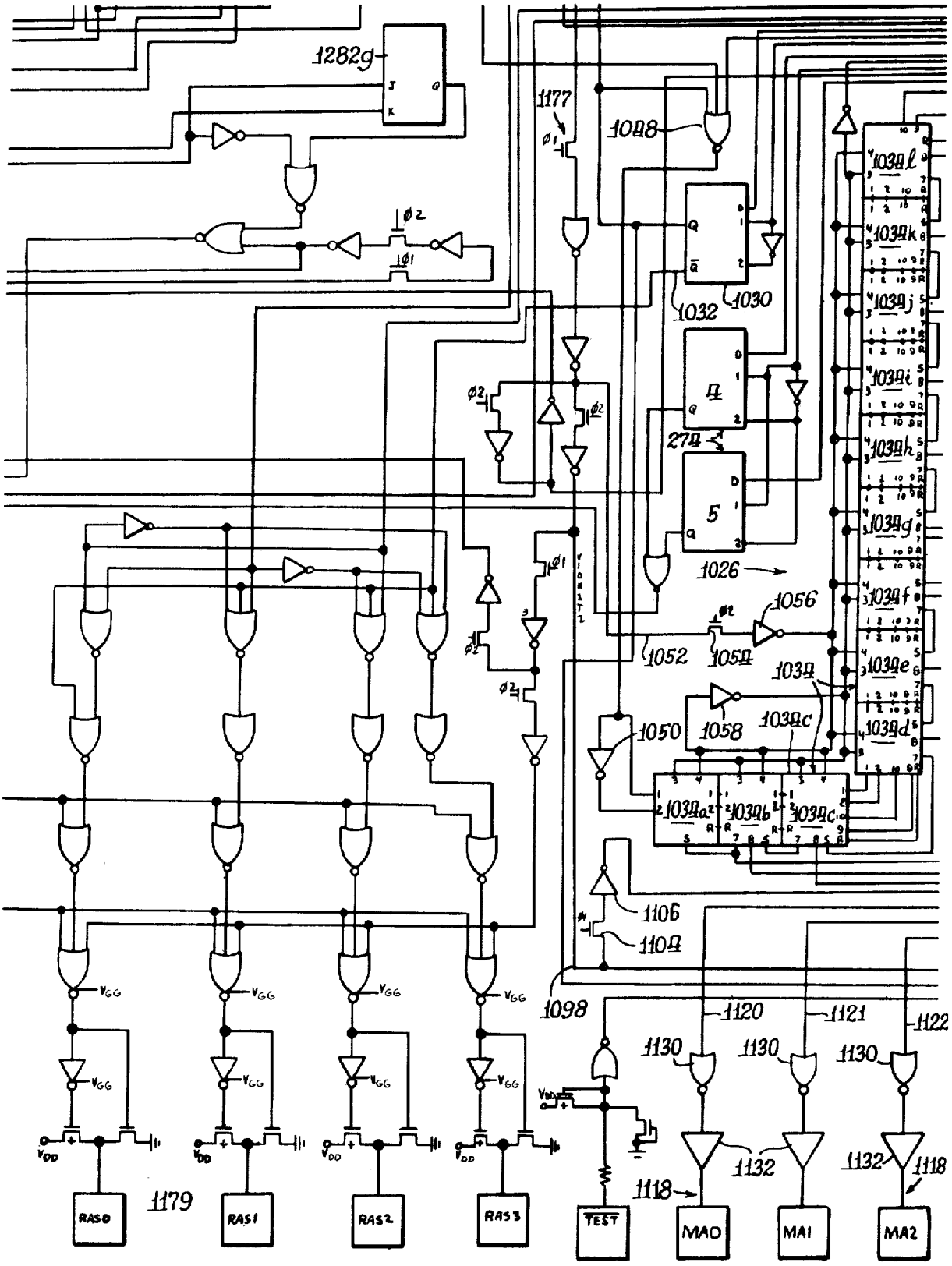
1282g
1177
1098
1032
1030
27A
1026
1056
1052
105A
103A
1058
1050
103Ag
103Af
103Ae
103Ad
103Ac
103Ab
103Aa
1106
110A
1120
1121
1122
1130
1132
1118
1179
RAS0
RAS1
RAS2
RAS3
TEST
MA0
MA1
MA2

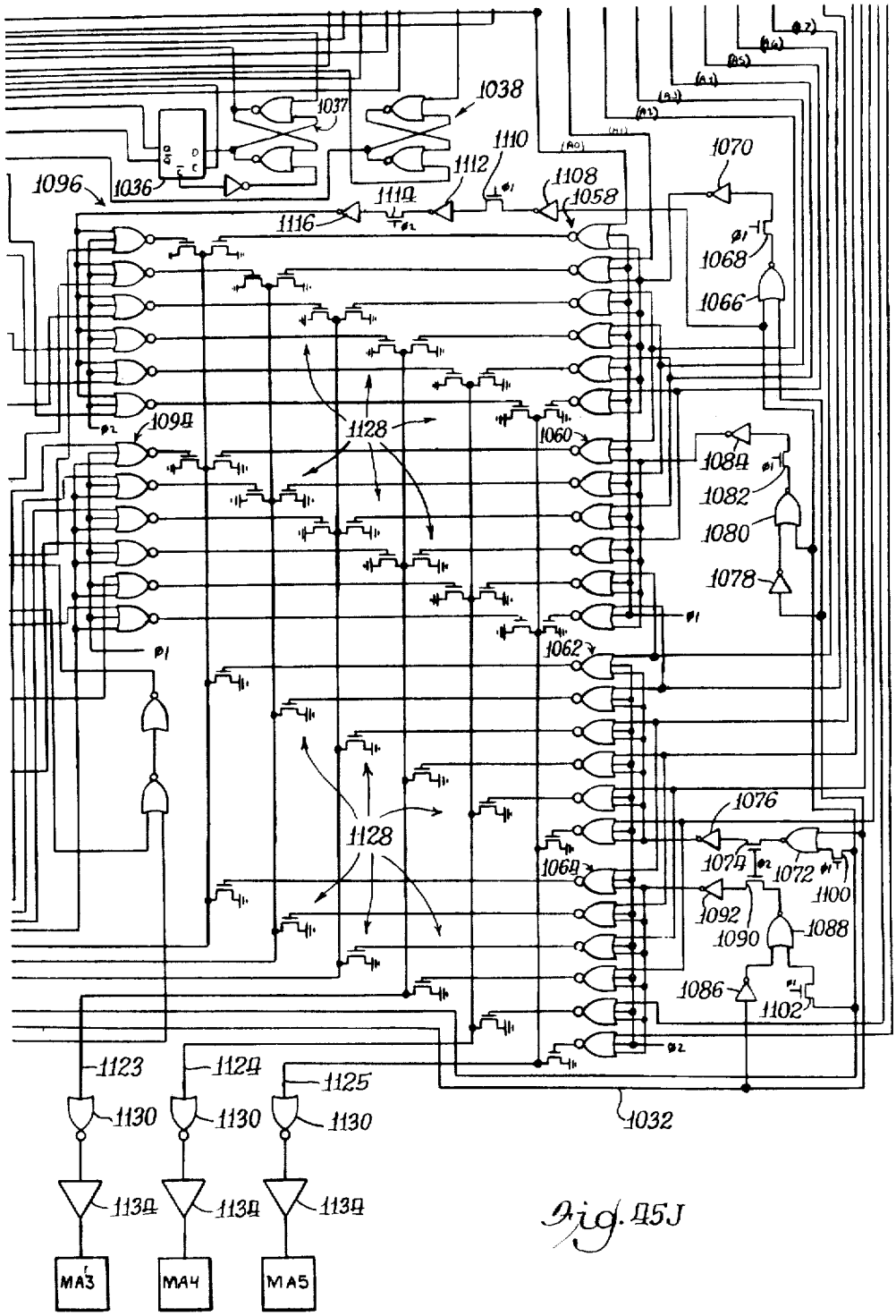
1038
1037
1110
1112
1096
1036
1114
1108
1058
1116
1070
1068
1066
1094
1128
1060
1084
1082
1080
1078
1062
1076
1074
1072
1100
1092
1090
1088
1086
1102
1064
1123
1124
1125
1130
1130
1130
1132
1134
1134
1134
MA3
MA4
MA5

Fig. 45J

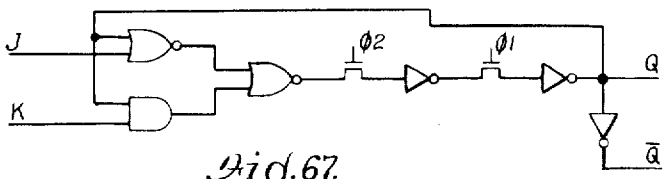

Fig. 67.

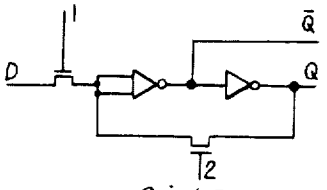

Fig. 47.

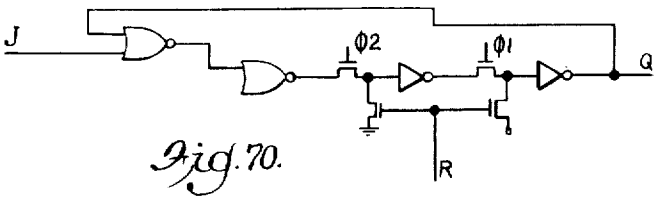

Fig. 70.

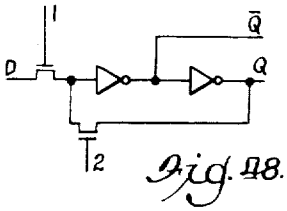

Fig. 48.

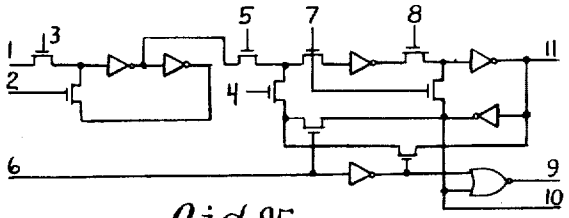

Fig. 95.

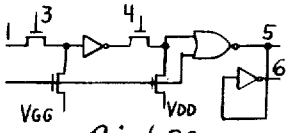

Fig. 89.

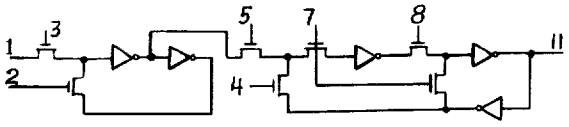

Fig. 96.

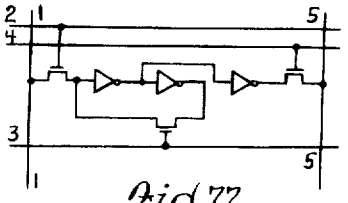

Fig. 77.

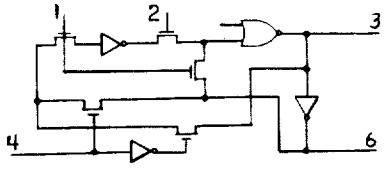

Fig. 97.

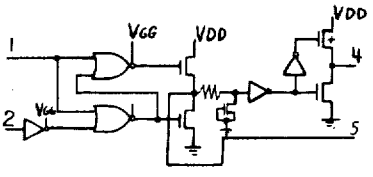

Fig. 78.

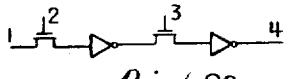

Fig. 82.

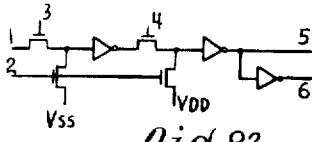

Fig. 83.

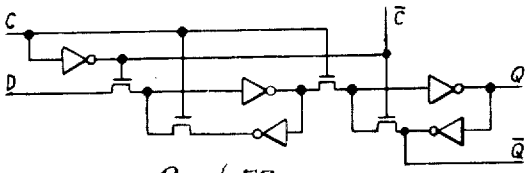

Fig. 54.

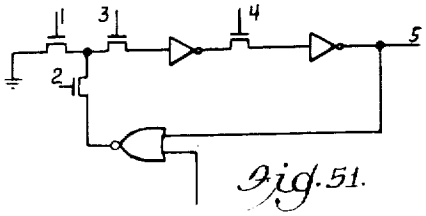

Fig. 51.

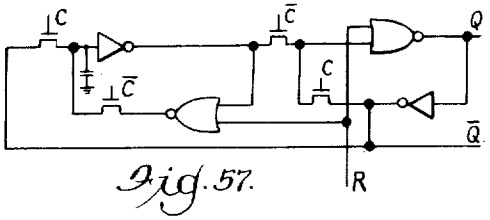

Fig. 57.

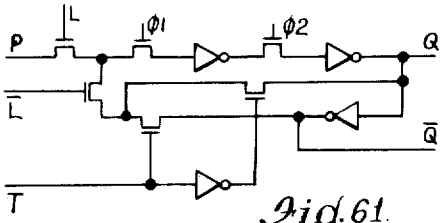

Fig. 61.

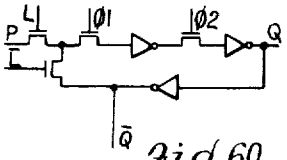

Fig. 60.

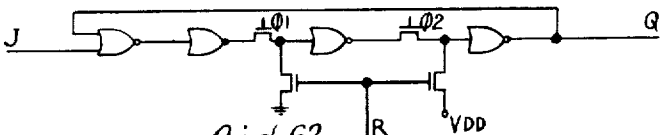

Fig. 62.

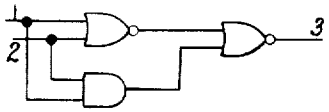

Fig. 63.

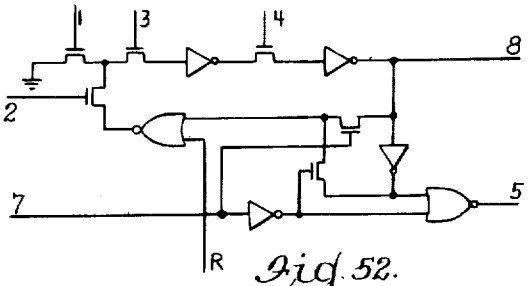

Fig. 52.

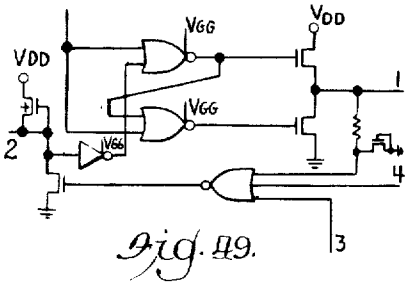

Fig. 49.

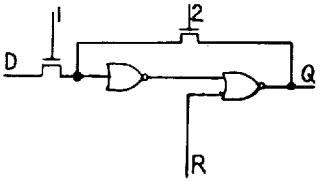

Fig. 65.

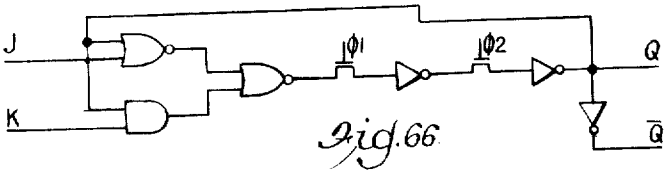

Fig. 66

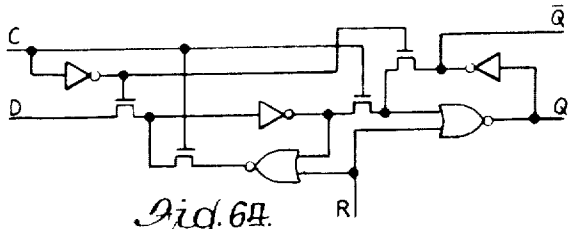

Fig. 64.

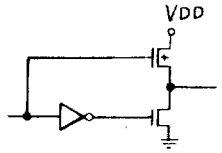

Fig. 56.

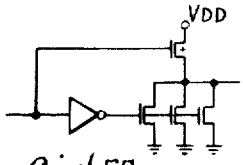

Fig. 55.

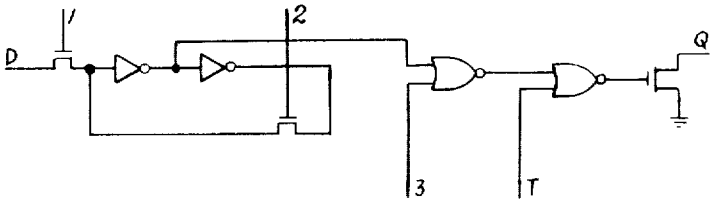

Fig. 68.

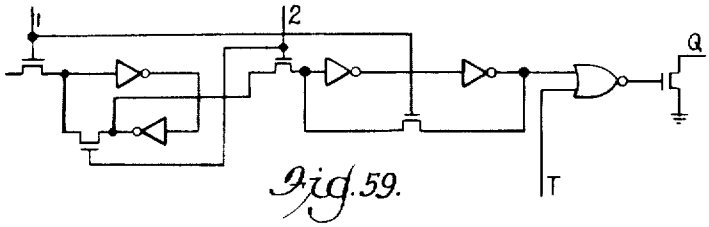

Fig. 59.

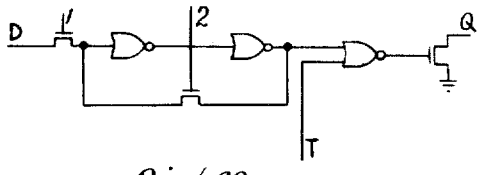

Fig. 69.

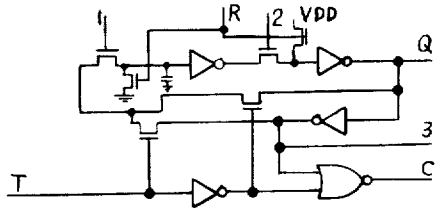

Fig. 58.

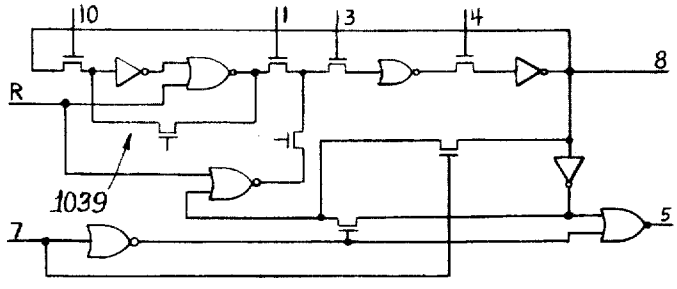

Fig. 53.

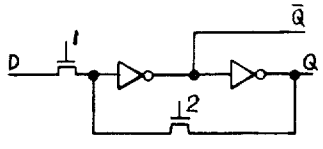

Fig. 50.

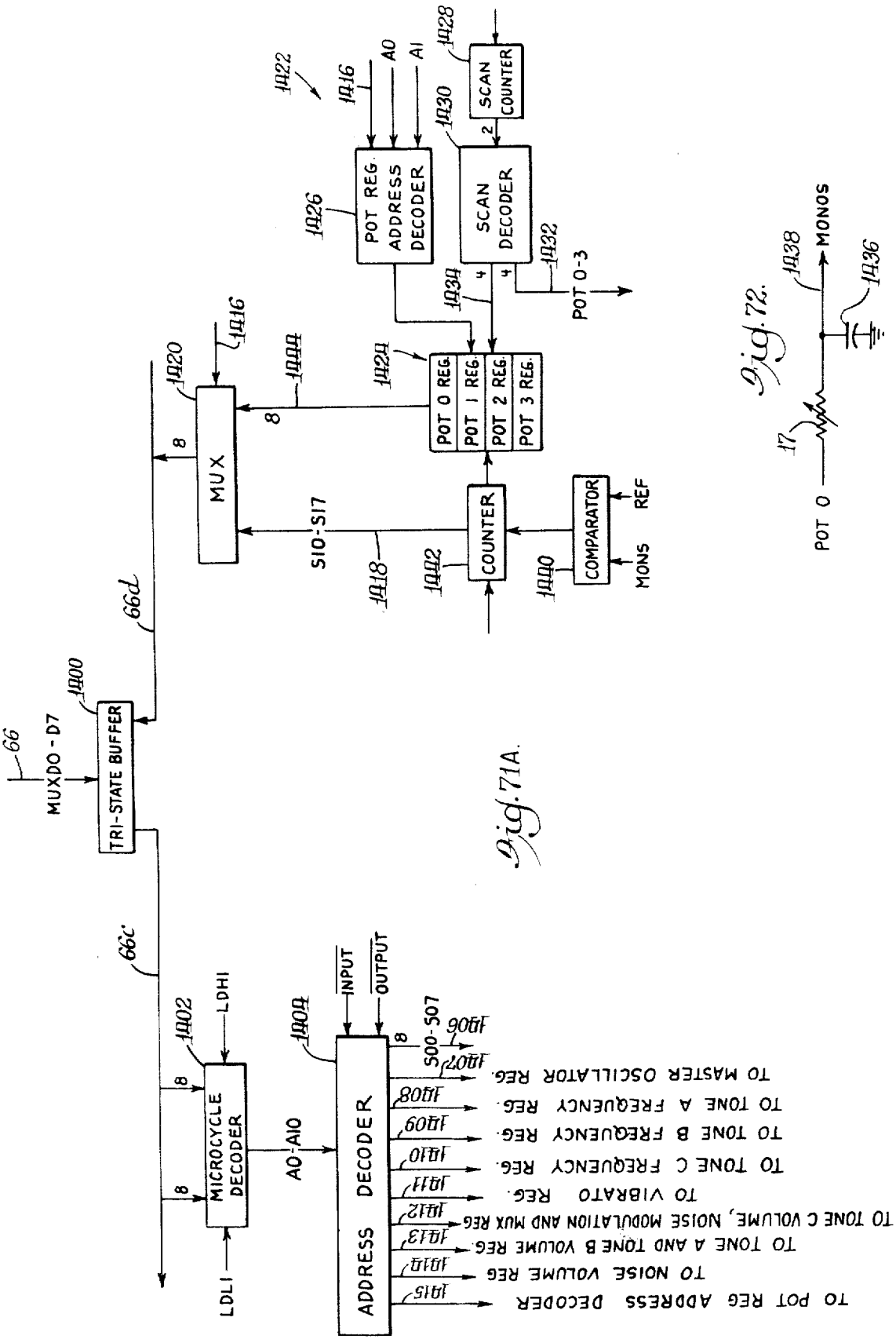

Fig. 71A.

Fig. 72.

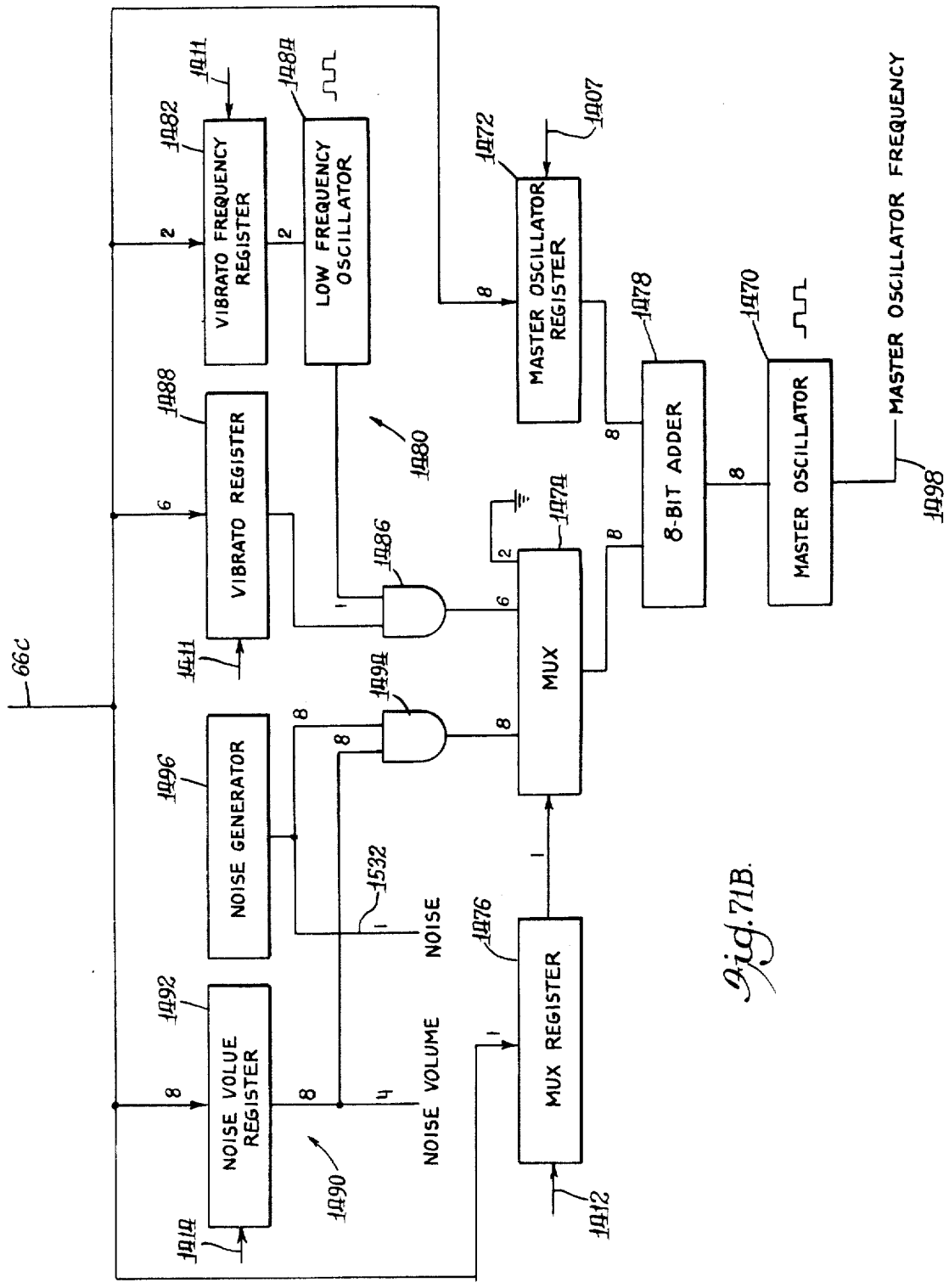
66C
1411
1482
VIBRATO FREQUENCY REGISTER
1484
LOW FREQUENCY OSCILLATOR
1488
VIBRATO REGISTER
1480
1486
1494
1496
NOISE GENERATOR
1532
NOISE
1492
NOISE VOLUE REGISTER
NOISE VOLUME
1490
1414
1476
MUX REGISTER
1412
MUX
1474
1472
MASTER OSCILLATOR REGISTER
1407
8-BIT ADDER
1478
1470
MASTER OSCILLATOR
MASTER OSCILLATOR FREQUENCY
1498

Fig. 71B.

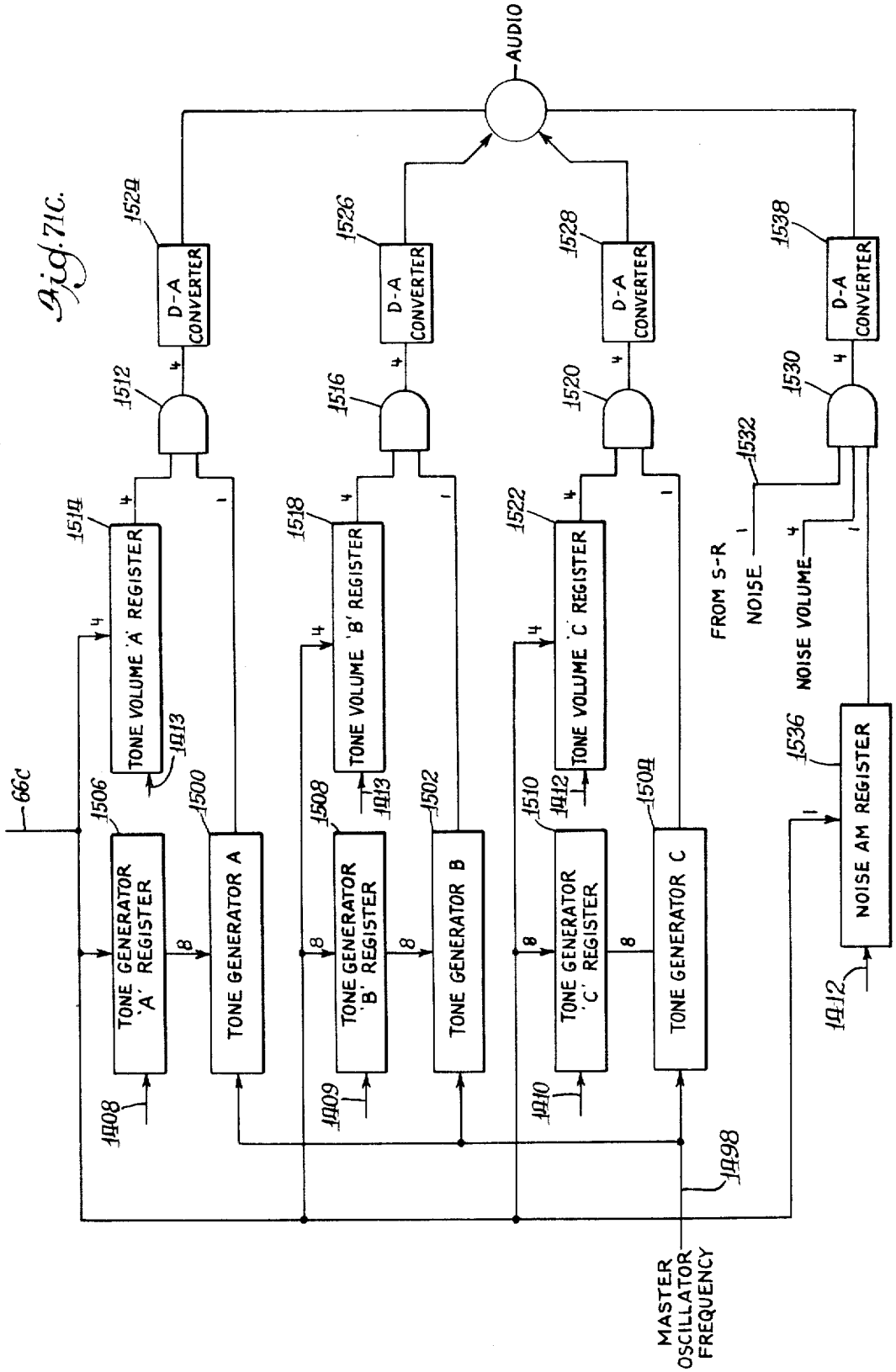
AUDIO
D-A CONVERTER
1524
1526
1528
1538
1512
1516
1520
1530
1514
1518
1522
1532
TONE VOLUME 'A' REGISTER
TONE VOLUME 'B' REGISTER
TONE VOLUME 'C' REGISTER
FROM S-R
NOISE
NOISE VOLUME
1513
1506
1500
1508
1502
1510
1504
1536
66c
TONE GENERATOR 'A' REGISTER
TONE GENERATOR A
TONE GENERATOR 'B' REGISTER
TONE GENERATOR B
TONE GENERATOR 'C' REGISTER
TONE GENERATOR C
NOISE AM REGISTER
1408
1409
1410
1412
1498
MASTER OSCILLATOR FREQUENCY

Fig. 71C.

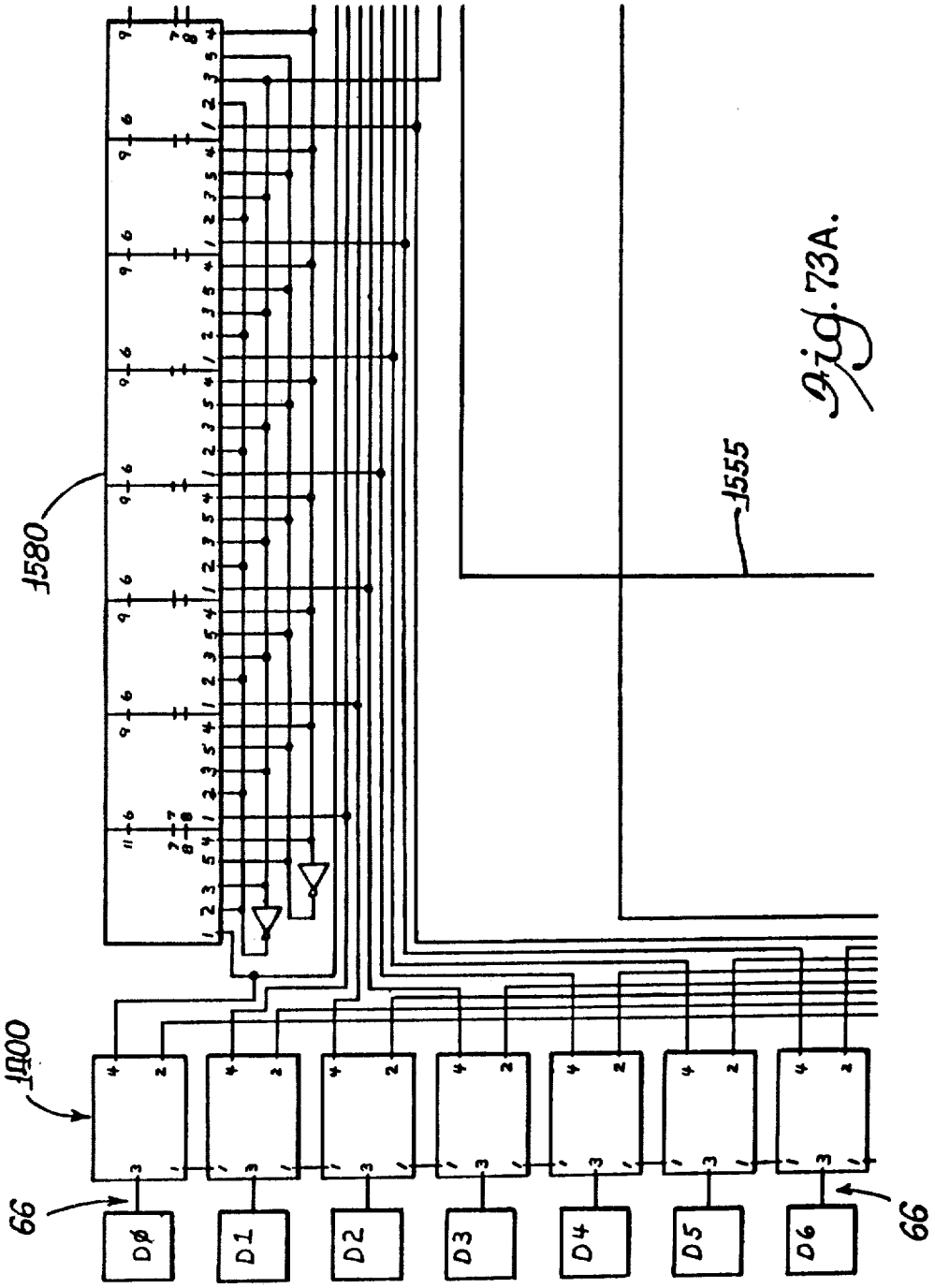

Fig. 73A.

Fig. 73B.

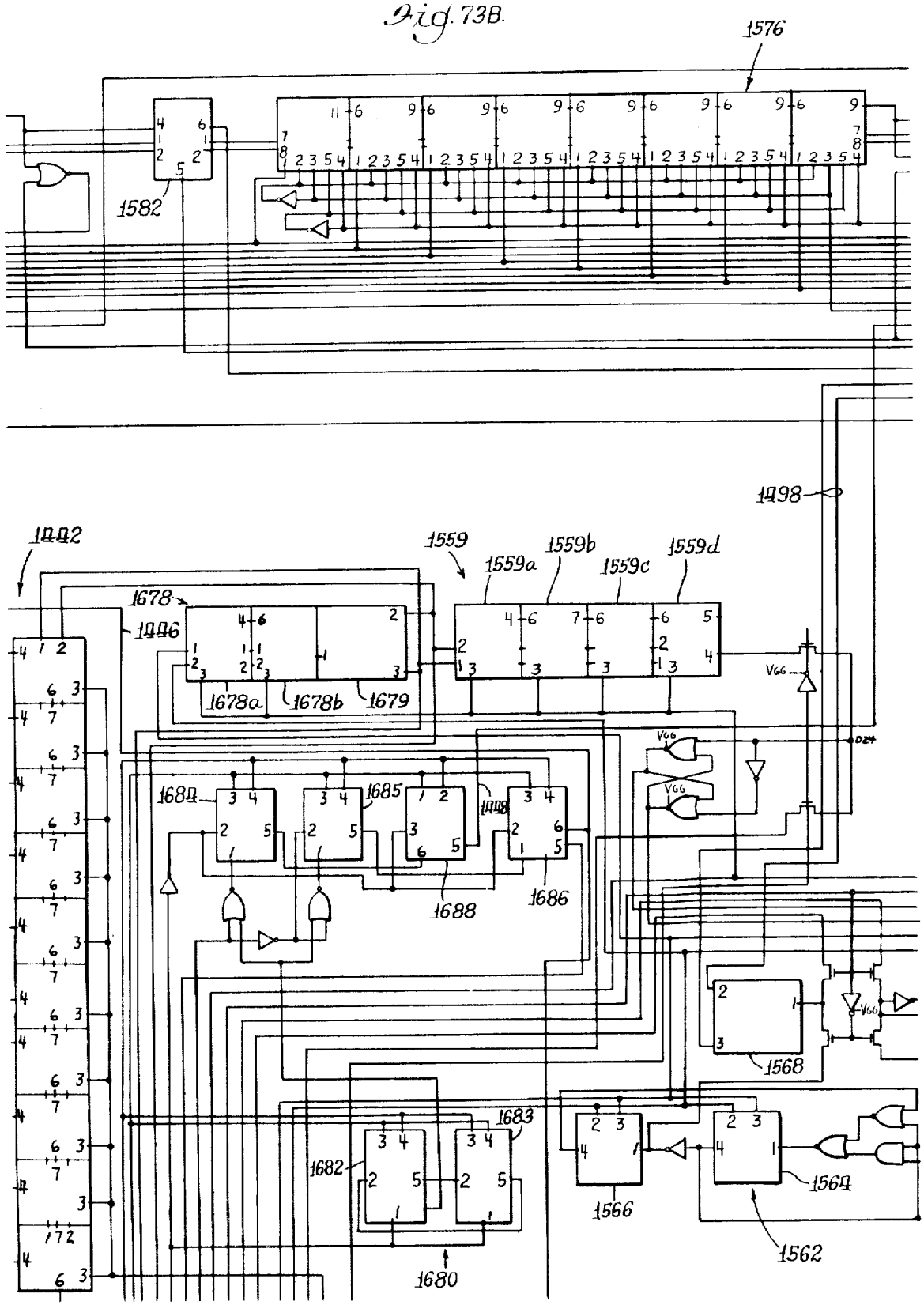
1576
1582
1598
1602
1559
1559a
1559b
1559c
1559d
1678
1606
1678a
1678b
1679
1684
1685
1688
1686
1683
1682
1680
1568
1566
1564
1562
VGG

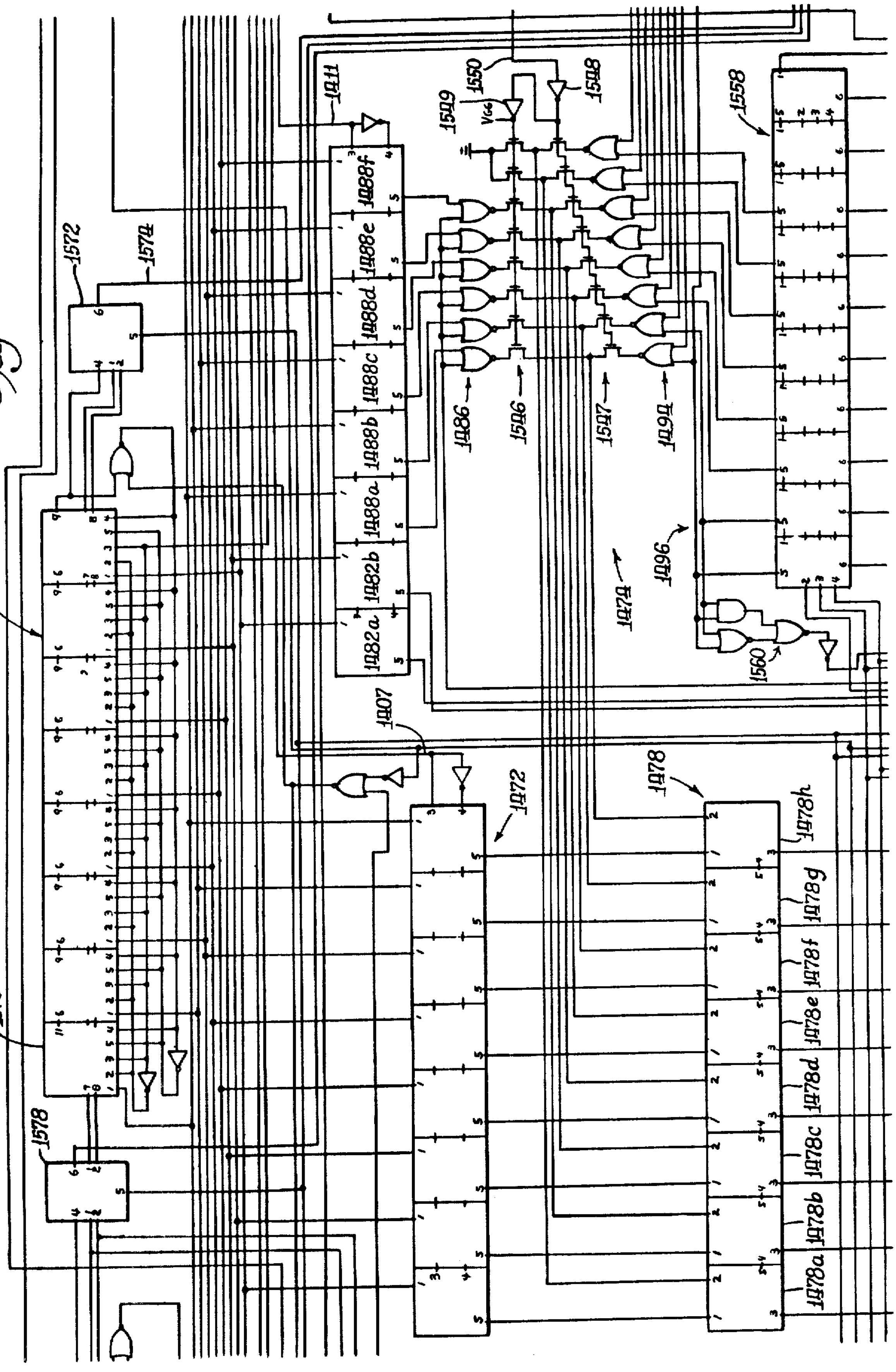
1570
1572
1574
1578
1411
1488a
1488b
1488c
1488d
1488e
1488f
1482a
1482b
1407
1472
1478
1478a
1478b
1478c
1478d
1478e
1478f
1478g
1478h
1509
1550
1508
1558
1486
1506
1507
1490
1496
1474
1560
V_{GG}

Fig. 73c.

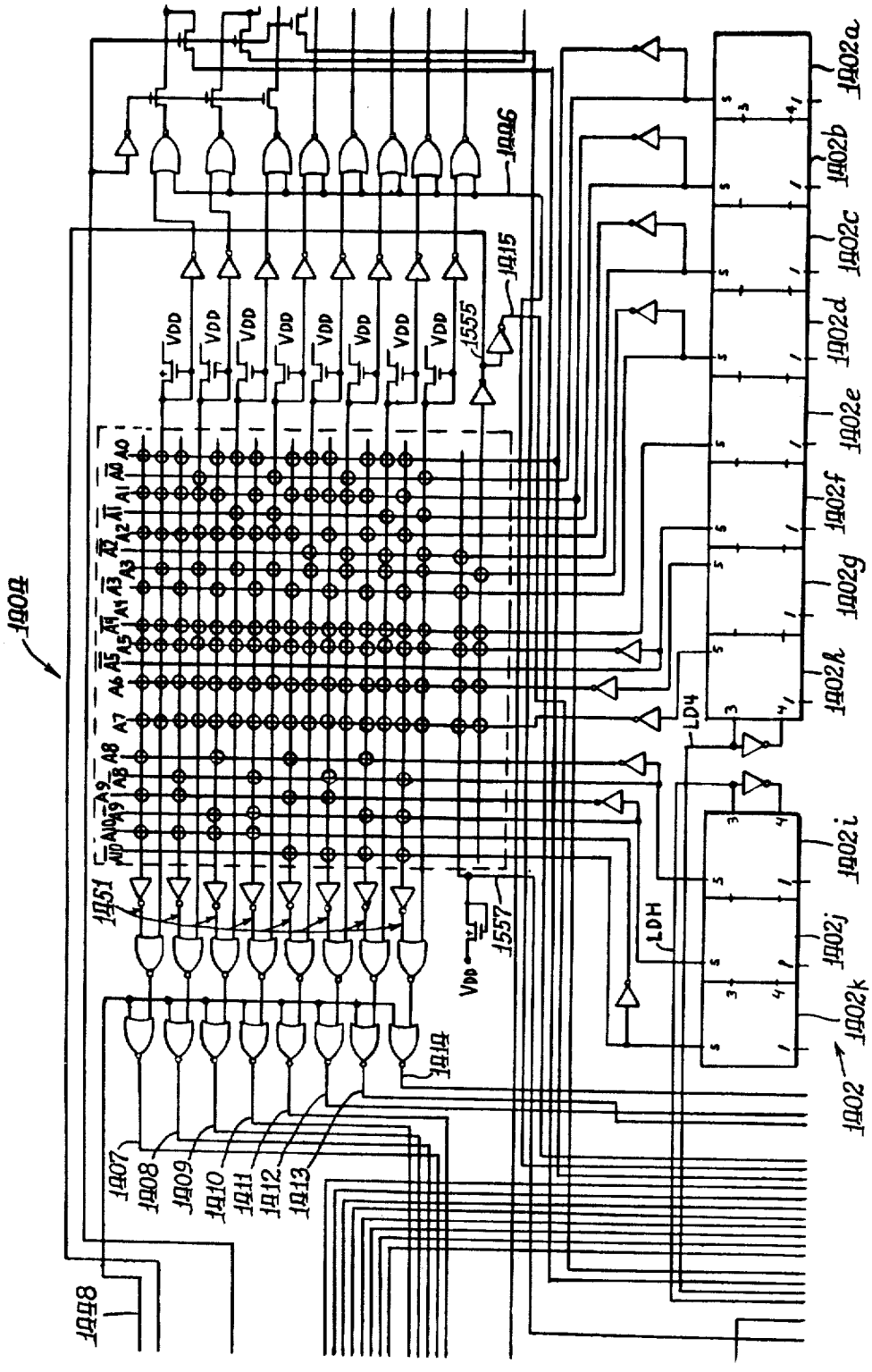
1404
1406
1415
1555
VDD
1451
1557
1414
1407
1408
1409
1410
1411
1412
1413
1448
LD4
LDH
1402
1402a
1402b
1402c
1402d
1402e
1402f
1402g
1402h
1402i
1402j
1402k

Fig. 73D.

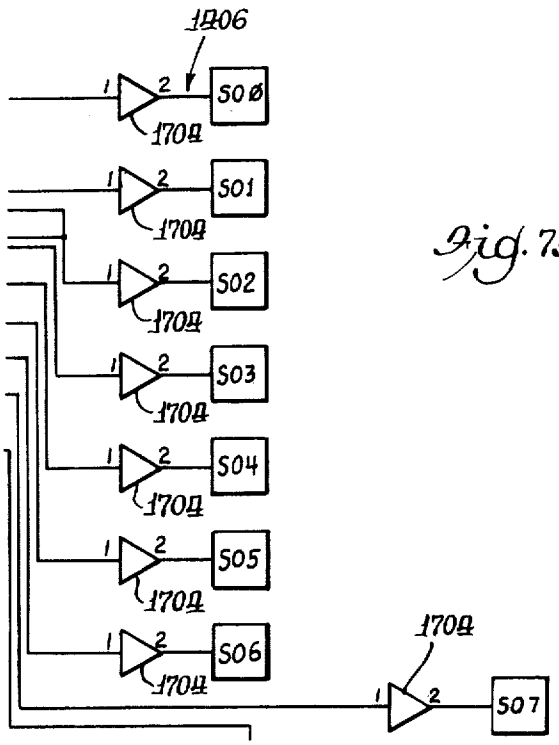

Fig. 73E.

Fig. 73F.

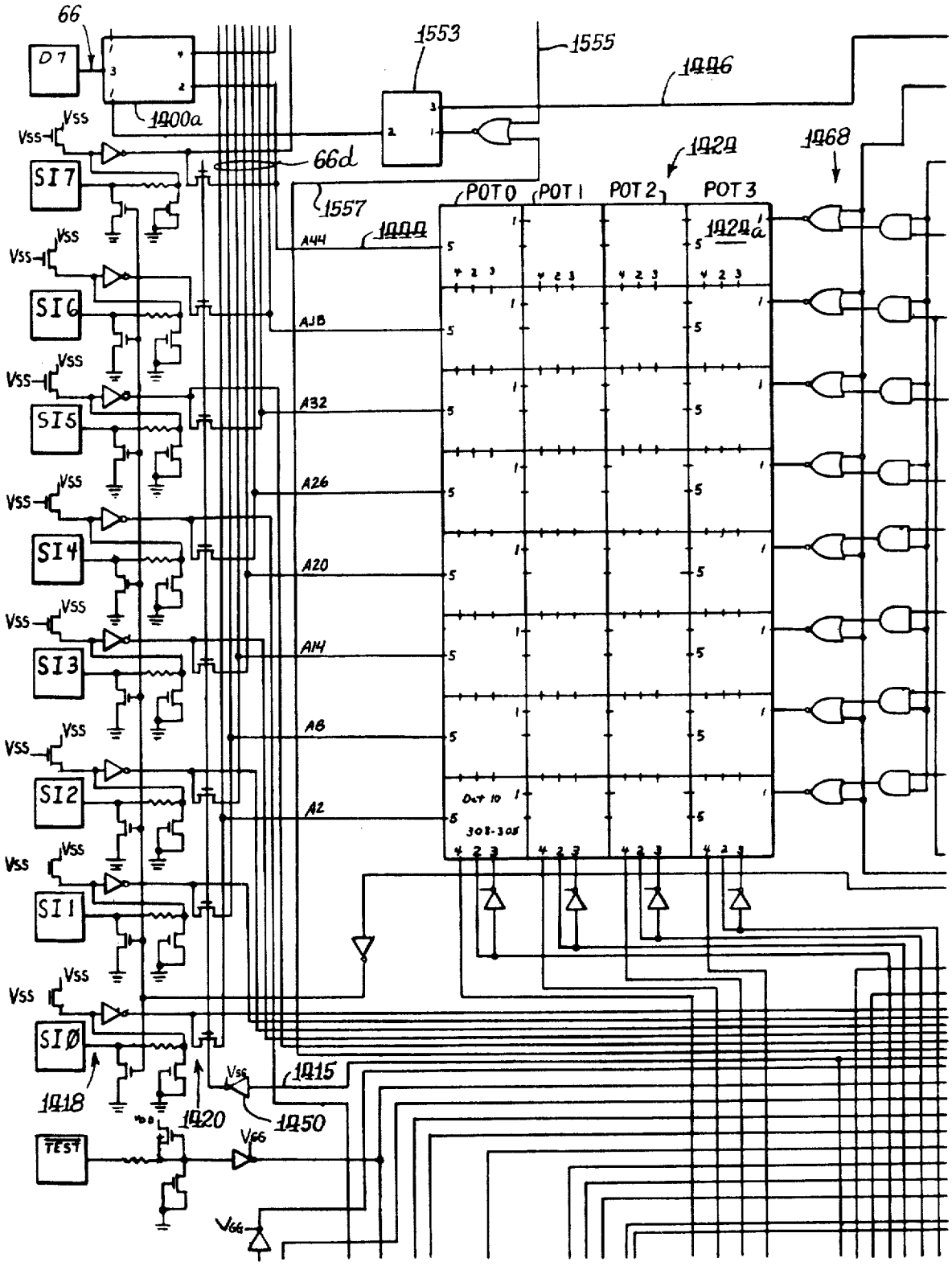
66
D7
1400a
1553
1555
1446
66d
1557
1444
1424
1468
POT 0
POT 1
POT 2
POT 3
1424a
A44
A38
A32
A26
A20
A14
A8
A2
SI7
SI6
SI5
SI4
SI3
SI2
SI1
SIØ
Vss
1418
1420
1450
1415
TEST
VGG
Oct 10
308-305

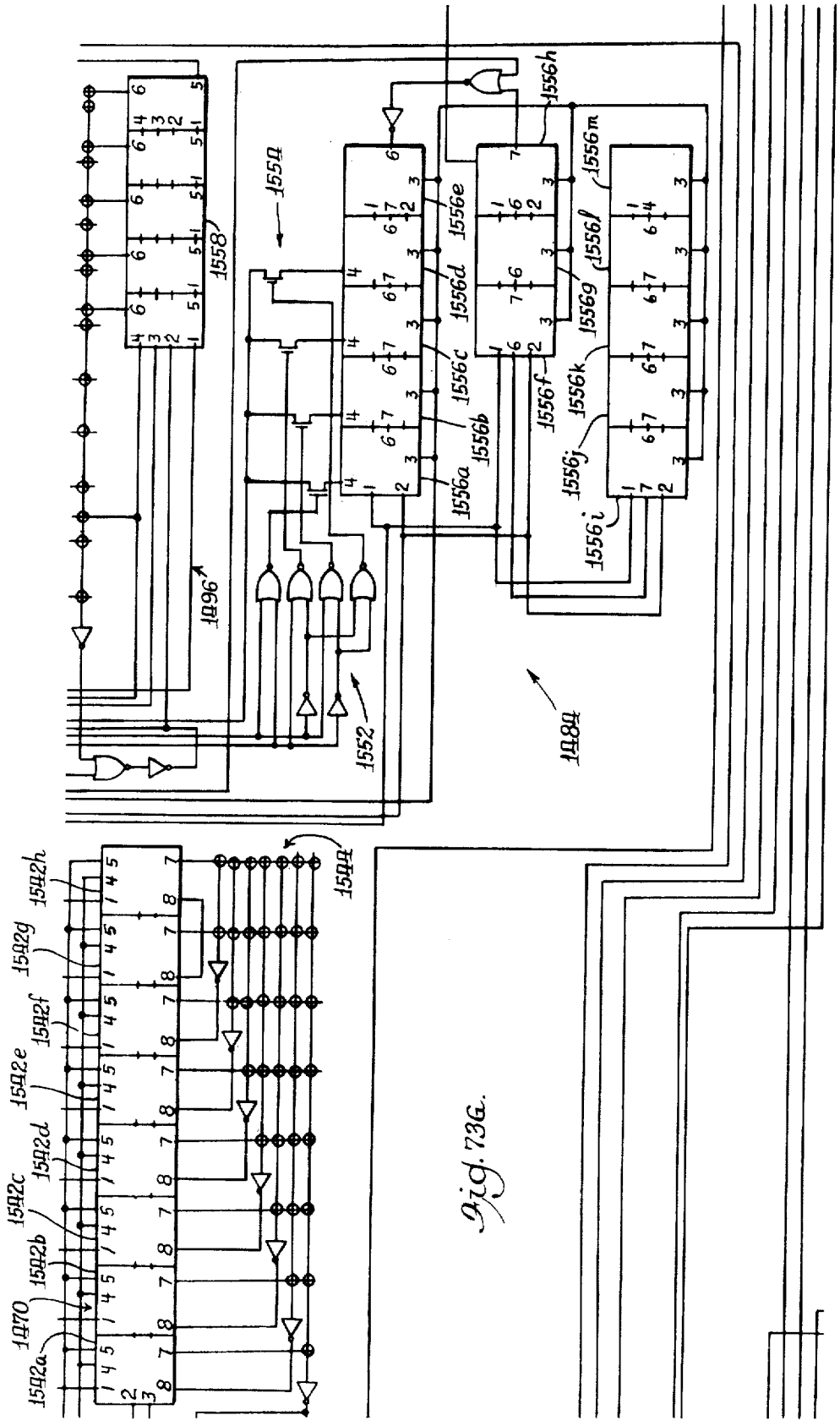
1556h
1556m
1555a
1558
1556e
1556l
1556d
1556g
1556c
1556k
1556f
1556b
1556j
1556a
1556i
1096
1552
1084
1554
1542h
1542g
1542f
1542e
1542d
1542c
1542b
1542a
1070

Fig. 73G.

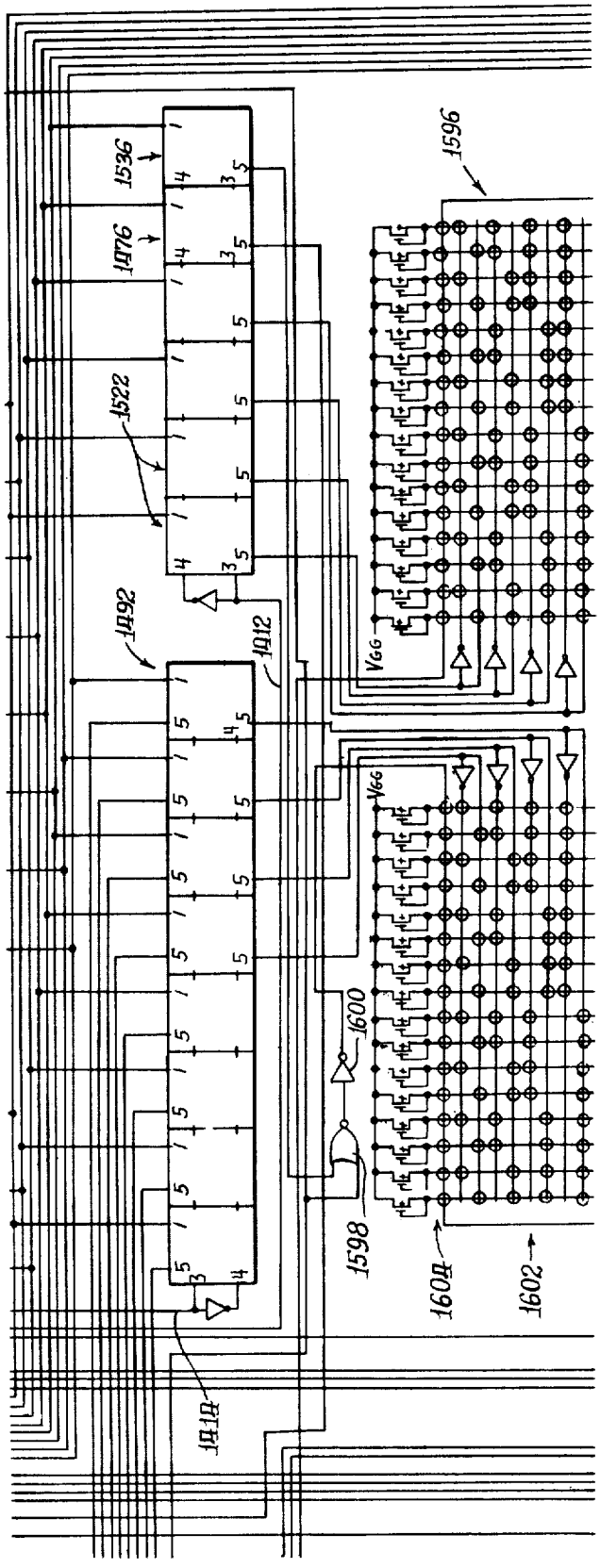

Fig. 73H.

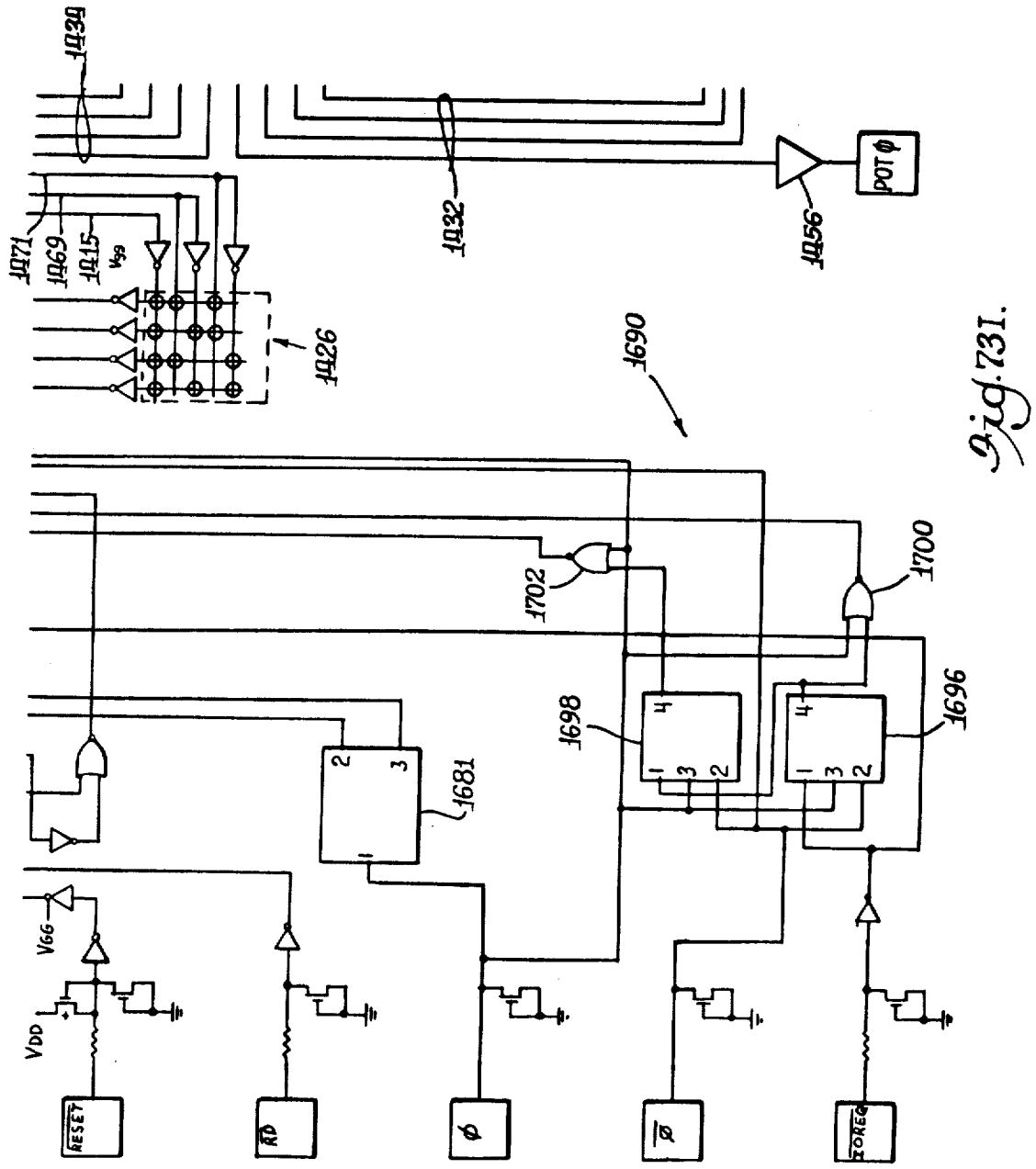
1030
1032
1056
POT φ
1071
1069
1015
1026
1690
1700
1702
1698
1696
1681
VGG
VDD
RESET
RD
φ
IOREQ

Fig. 73I.

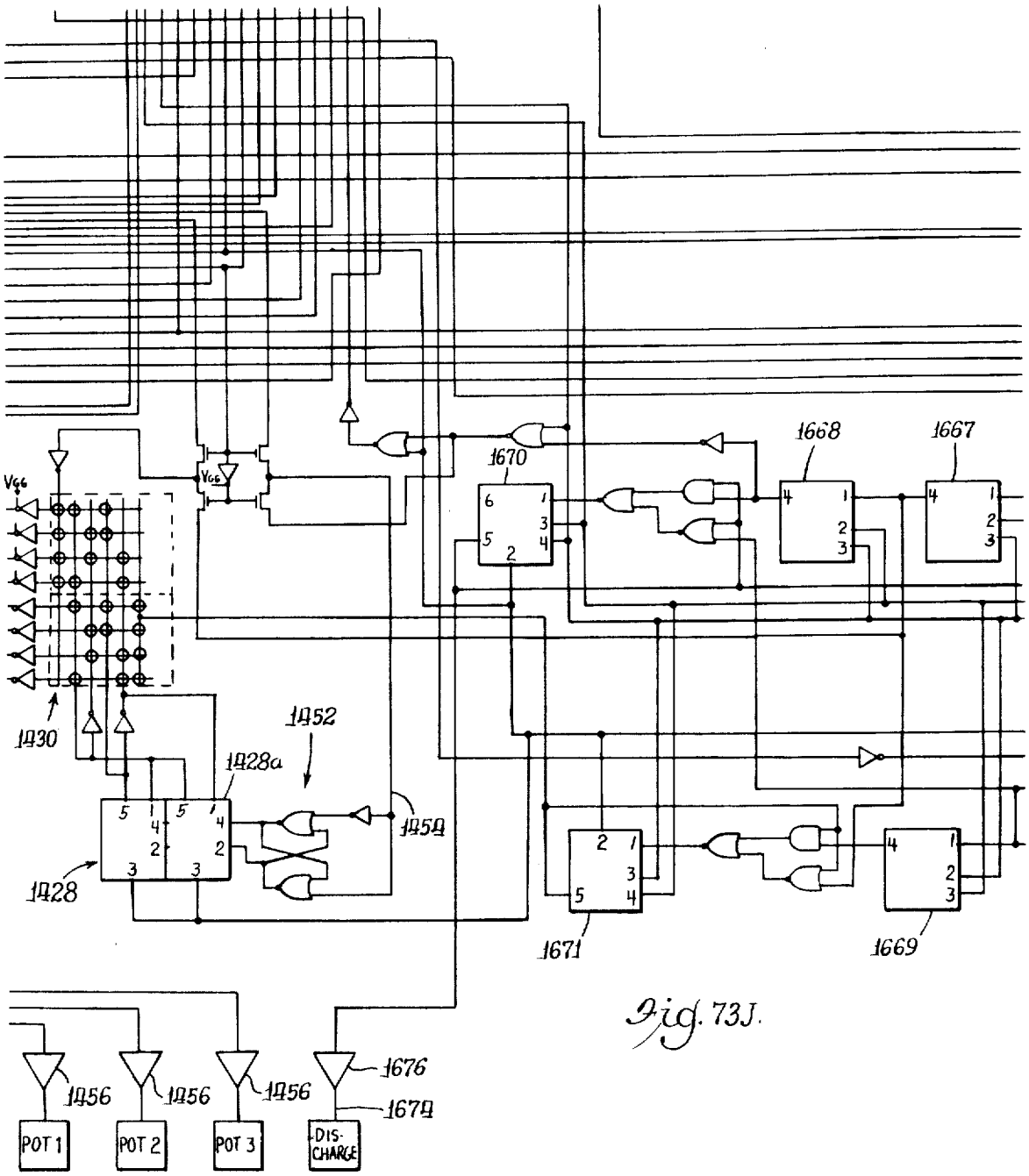
1668
1667
1670
Vcc
1430
1452
1428a
1459
1428
1671
1669
1456
1456
1456
1676
1679
POT 1
POT 2
POT 3
DIS-CHARGE

Fig. 73J.

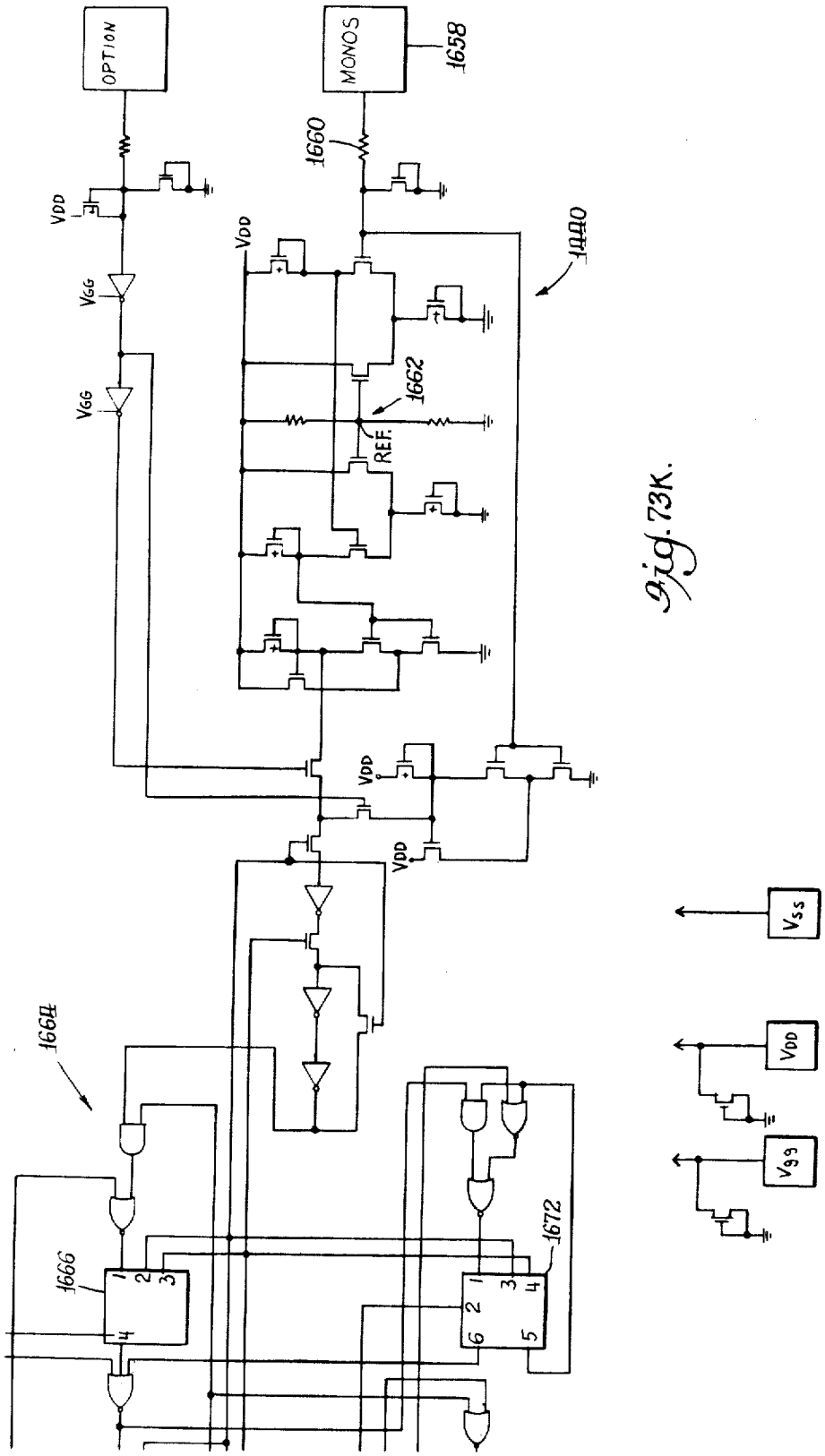
OPTION
MONOS
1658
1660
VDD
VGG
VGG
1662
REF.
1664
1666
1672
VSS
VDD
VSS

Fig. 73K.

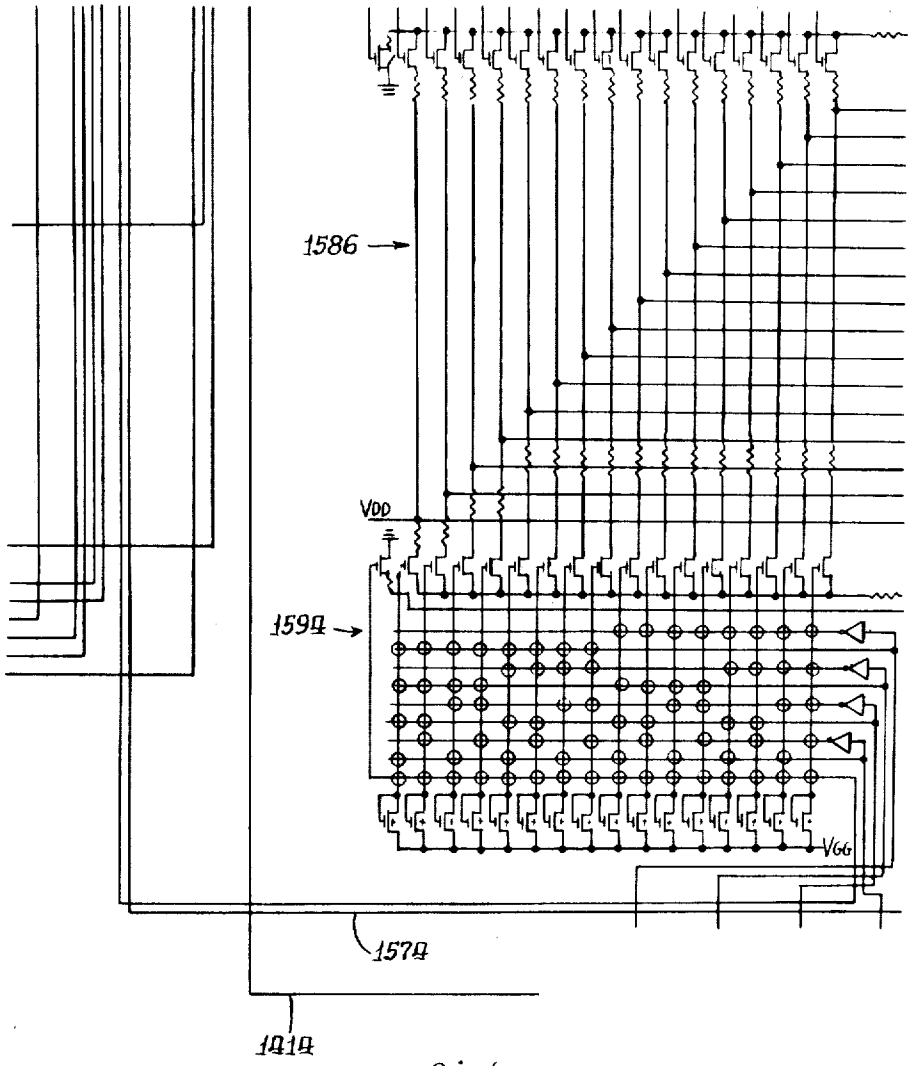

Fig. 73L.

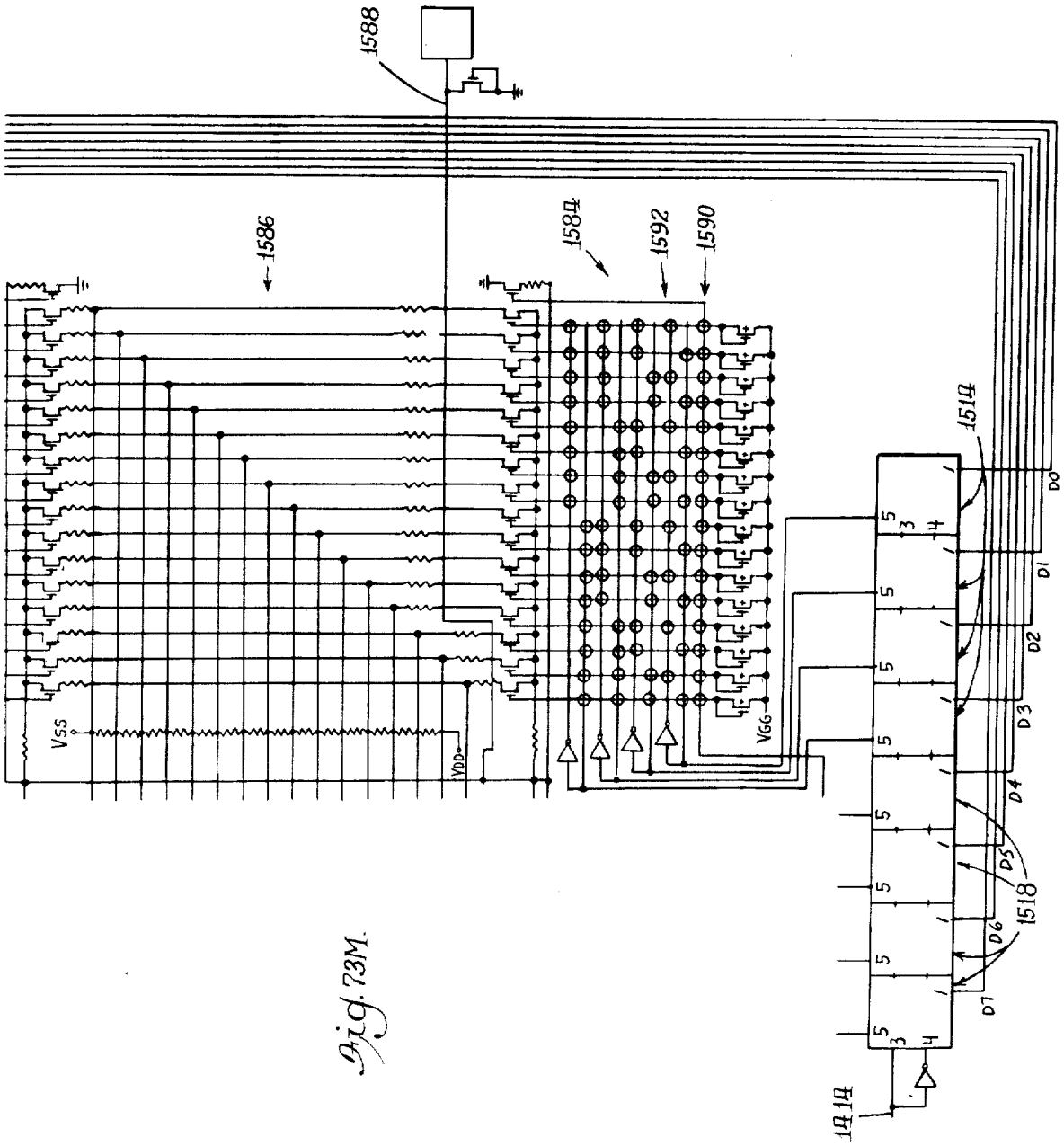
1588
1586
1584
1592
1590
1514
1518
1516
VSS
VDD
VGG
D0
D1
D2
D3
D4
D5
D6
D7

Fig. 73M.

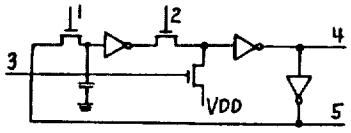

Fig. 85.

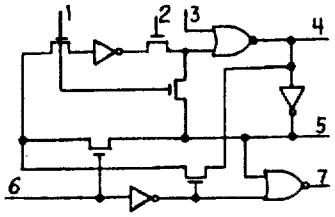

Fig. 84.

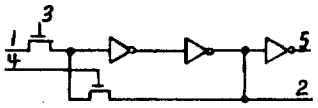

Fig. 75.

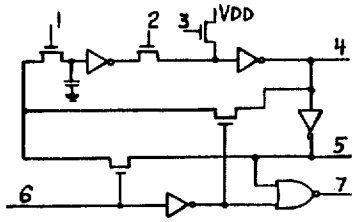

Fig. 86.

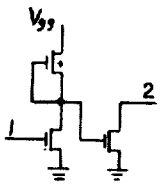

Fig. 88

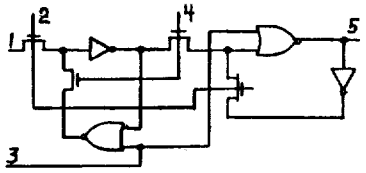

Fig. 80.

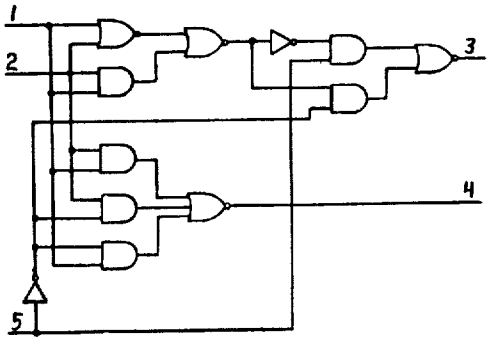

Fig. 92.

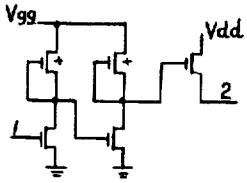

Fig. 81.

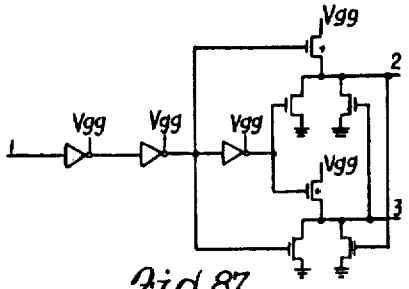

Fig. 87.

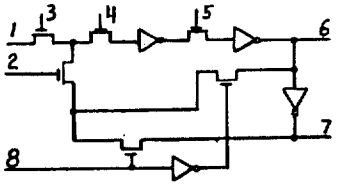

Fig. 90.

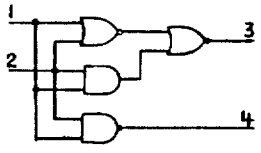

Fig. 93.

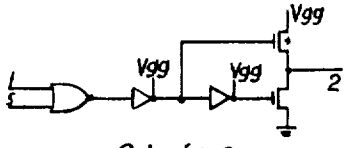

Fig. 79.

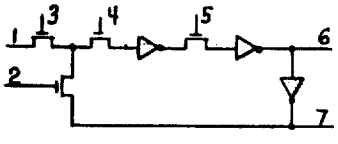

Fig. 91.

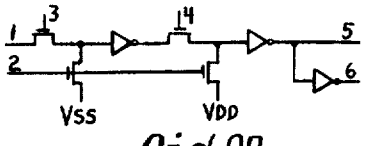

Fig. 94.

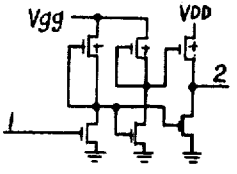

Fig. 76.

AUDIO/VISUAL HOME COMPUTER AND GAME APPARATUS

This is a division of application Ser. No. 910,964 filed May 30, 1978 now U.S. Pat. No. 4,301,503 which is a continuation-in-part of Ser. No. 812,662 filed July 5, 1977, U.S. Pat. No. 4,296,930, which is a continuation of Ser. No. 635,406, filed Nov. 26, 1975, now abandoned.

The present invention relates to computers and more particularly to home computers and game apparatus adapted for use with cathode ray tube display apparatus, such as television receivers or monitors.

Video games typically employ a television receiver or monitor (hereinafter often referred to as merely "televsion") to display the game symbols and figures. Each player usually has a control which may be manipulated to cause the game symbols on the screen to interact in accordance with the rules of the particular game being played, often under the direction of a small computer, or microcomputer. Similarly, the television may be used as a display for a computer used as a calculator.

Each frame of the picture displayed on the television screen is comprised of a plurality of picture elements (pixels) which are rapidly and sequentially displayed in a raster scan of the television screen. One type of video game employs a random-access-memory (RAM) to store digital data representative of each picture element to be displayed on the screen. The digital data stored in the RAM is read synchronously with the raster scanning of the picture elements of the telelvision screen. The digital data is converted to signals suitable for the television receiver or monitor and supplied to the television to define the particular pixels being displayed. A programmed microprocessor (a type of computer) may be used to update or modify the data stored in the RAM and hence modify the picture displayed on the television screen in response to signals transmitted from the player controls, in accordance with the microprocessor program.

It is an object of the present invention to provide an improved computer particularly adapted for home use and having the capability of performing various game functions as well as normal computer and calculating functions. It is a further object to provide such a computer that is economical to manufacture. It is a still further object to provide such a computer adapted for use with interchangeable program storage devices.

These and other objects of the invention are more particularly set forth in the following detailed description and in the accompanying drawings of which:

FIG. **1** is a perspective view of a specific embodiment of the present invention;

FIG. **2** is a block diagram of a computer system of the embodiment of FIG. **1**;

FIGS. **3A** and **3B** are charts illustrating the memory address allocations for low and high resolution alternative modes of operation;

FIGS. **4A** and **4B** are diagrams illustrating the correspondence between the memory address locations in the display memory with the pixels of the display screen for the low and high resolution modes, respectively;

FIG. **5** is a diagram illustrating the correspondence of color registers 0–7 with particular display screen areas;

FIG. **6** is a diagram illustrating examples of modifications performed on pixel data;

FIGS. **7A** and **7B** illustrate further examples of modifications performed on pixel data;

FIG. **8** is a diagram illustrating the particular data that can be read at a plurality of input ports;

FIG. **9** is a block diagram of a microcycler interface employed in the system;

FIGS. **10A** and, **10B** and **10C** are a schematic diagram of the interconnections of the integrated circuit chips of the system;

FIGS. **11A–11F** are a block diagram of the data chip of the video processor of the system;

FIGS. **12A–12G** are timing diagrams of various control signals of the system for various read and write operations;

FIGS. **13A–Z** and **13AA–EE** illustrate an example of a circuit implementing the block diagram of FIGS. **11A–F**;

FIG. **14** is a composite diagram illustrating the relationship of FIGS. **13A–EE** viewed as whole;

FIGS. 15–39 are diagrams showing blocks of FIGS. **13A–EE** in greater detail.

FIG. **40** illustrates the pixel data contained in registers of a rotator circuit of the video processor;

FIGS. 41–43 illustrate the relationship among control, clock and synchronization signals of the system;

FIG. **44** is a block diagram of the address chip of the video processor;

FIGS. **45A–J** show a more detailed circuit of the address chip;

FIG. **46** illustrates a composite view of FIGS. **45A–J**;

FIGS. 47–70 are diagrams showing blocks of FIGS. **45A–J** in greater detail;

FIGS. **71A–C** are block diagrams of the input/output chip;

FIG. **72** illustrates a circuit for the generation of an input signal;

FIGS. **73A–M** show a more detailed circuit of the input/output chip;

FIG. **74** is a composite view of the FIGS. **73A–M**; and

FIGS. **75–97** are diagrams showing blocks of FIGS. **73A–M** in greater detail.

The preferred embodiments of the present invention are hereinafter described. In general, the system comprises a display for providing discrete picture elements for presentation of movable symbols and a display memory for storage of digital signals representative of picture elements of the display. The system further comprises a computer having a program memory for receiving digital input signals and supplying digital output data signals and other digital output signals representative of picture elements in response to the input signals and program memory. A video processor means is operatively connected to the computer and display memory for selectively performing a plurality of modifications to the picture element output signals from the computer in response to the output data signals and also for transferring the modified picture element signals to the display memory. The video processor means is also operatively connected to the display for supplying signals thereto in response to the digital picture element signals stored in the display memory whereby the picture elements represented therein are displayed.

The system shown in FIG. **1** comprises a computer console **10** having four player-operated control handles **12***a–d* connected by coiled line cords **14***a–d*, respectively, to the computer console **10**. Thus, the console **10** can accommodate up to four players at a time. Each control handle has a trigger switch **16** and a top mounted joy-stick **17** for actuating four directional

switches. The joy-stick **17** has a rotatable knob mounted thereon which controls a potentiometer. The console **10** further has a keypad **18** which has a plurality of keys or push-buttons such as indicated at **20**, and a slot **22** for receiving a removable cartridge or cassette **24** containing stored programs. The console **10** further has a cassette eject button **26** for ejecting the cassette whereby the cassette **24** may be easily replaced with a different cassette containing different programs.

A display for presenting movable symbols is shown as a standard color television receiver **28** which is connected to the computer console **10** by a line **30**. The television (TV) has a cathode ray tube screen **32** on which a plurality of movable symbols such as the cowboys **36** and **38** are presented for a "Gunfight" game. The picture presented on the screen **32** is made up of the cowboy symbols **36**, **38**, and a cactus symbol **40** superimposed on a background each in one or more of a variety of color and intensities and comprises a plurality of discrete picture elements or pixels.

A symbol's action is controlled in part by a control handle. For example, the cowboy **36** may be moved up, down, left, right, up and to the left, up and to the right, etc., by proper movement of the joy-stick **17**. The direction of the cowboy's shooting arm may be controlled by rotating the potentiometer control knob of the joy-stick **17** and the gun may be fired by pulling the trigger **16**. Should the bullet **41** strike the cowboy **38**, the cowboy **38** will be caused to fall by a computer system contained within the console **10**. In addition, suitable music such as the "Funeral March" will be played by the computer through the television **28**.

A shematic block diagram of the computer system of FIG. **1** is shown in FIG. **2** to comprise a display memory for storage of digital signals representative of picture elements of the display (or pixel data) which is shown as a display random-access-memory (RAM) **42**. The system further comprises a digital computer **44** which is shown to include a central processing unit (CPU) **46** which may be a microprocessor, for example. The computer **44** has a program memory which includes a system read-only-memory (ROM) **48** and a cassette ROM **24** connected to the CPU **46**. The program memory contains instructions to direct the CPU **46** and the symbols and figures stored in digital form for the particular computer functions and games.

The cassette ROM **24** may be easily removed by pressing the ejector buttom **26** (FIG. **1**) and replaced by another cassette in order to change a portion of the program memory. This greatly enhances the flexibility of the system in that a potentially endless variety of game and functions may be performed by the computer console **10** and TV display **28**.

The computer **44** is operatively connected to an input/output (I/O) chip **50** and a video processor **52** comprising an address chip **56** and a data chip **54** through a microcycler interface **60**. The control handles **12***a–d* and the keypad **18** are connected to the I/O chip and provide signals in response to manipulation by the players or operators to the I/O chip **50**. The digital computer **44** receives the input signals from the I/O chip **50** in digital form and supplies digital output data signals and digital pixel data signals in response to the input signals and the program memory. The I/O chip **50** has a music processor which provides audio signals in response to output data signals from the computer to play melodies or generate noise through the TV **28**.

The data chip **54** of the video processor **52** selectively performs a plurality of modifications to the pixel data signals from the computer in response to the output data signals from the CPU. The video processor is operatively connected to the display RAM **42** and transfers the modified or unmodified pixel data to the display memory **42** at address locations corresponding to address signals transmitted by the address chip **56**. The computer **44** transmits the address to the address chip **56** which relays the address to the display RAM **42**.

The video processor **52** is also operatively connected to the TV display **28** to supply signals to the display modulated by a radio frequency (RF) modulator **58** in response to the pixel data stored in the display RAM **42**. The address chip **56** internally generates addresses for sequentially reading the pixel data stored in the display RAM **42** whereby the pixels represented in the display memory are displayed.

The microcycler **60** interfaces the computer **44** to a peripheral device such as the video processor **52** and the input/output chip **50**. The computer provides a plurality of address signals on a plurality of address lines, a plurality of data signals on a plurality of data lines, and a plurality of control signals on a plurality of control lines to the microcycler **60**. The purpose of the microcycler **60** is to combine the address lines and the data lines from the CPU **46** into one data bus **66** to the video processor **52** and the I/O chip **50**.

The computer system is shown having an additional input device light pen **62**, which provides an additional input signal to the computer **44**. The light pen **62** is sensitive to light and may be used as a pointer by a player or operator to identify points on the TV screen **32** as will be more fully explained later.

The illustrated apparatus is a full-color video game and home computer system based on a mass-RAM-buffer technique in which two bits of the display RAM **42** are used to define the color and intensity of the pixel on the screen **32**. The display RAM **42** has eight bits or a byte at each memory address or location at which data may be read or rewritten. In this manner, the picture on the screen is defined by the contents of the display RAM which can be easily changed by modifiying the contents of the display RAM. Data which defines pixels will be referred to as "pixel data".

The specific system of the illustrated embodiment uses a Zilog z—80 microprocessor as the CPU **46** of the computer **44**. The system ROM **48** contains software or programming for a plurality of games. The cassette ROM **24** is a solid state cassette which provides additional memory whereby additional games may be played. These ROM's also contain pixel data which represents various game figures and symbols.

The system may be operated in a high resolution or low resolution mode. The high resolution mode generates a greater number of pixels per unit screen area resulting in a higher resolution. In both the low and high resolution modes, the operating system ROM **48** is allocated the first 8K of memory space; that is, approximately the first eight thousand memory addresses correspond to the system ROM **48** as shown in FIGS. **3A** and **3B**. Thus, addresses **0000**-**1FFF** (hexadecimal) are addresses for the memory locations of the system ROM. The cassette ROM **24** has the next 8K of memory space, or memory addresses **2000**-**3FFF** (hexadecimal), hereinafter "H") in both modes. The display RAM memory space begins at 16K or memory address location **4000H**.

In the low resolution mode, the display screen RAM has 4K bytes; in the high resolution, 16K bytes.

The CPU can transfer the pixel data of a pattern or figure stored in either the system or cassette ROM to the display RAM via the video processor. As noted before, the video processor may perform a variety of modifications to the pixel data before it is written into the display RAM. The modifications are performed by what will be called a "function generator" which is located on the data chip **54** of the video processor **52**. The modifications are performed by the function generator when the address bit A**14** of the address of the data is a 0. Thus, the address of data to be modified by function generator and written into the display RAM will be less than 2^{14} or 3FFF H. Consequently, the address of the data to be modified will be between **0000** H and 3FFF H for the high resolution embodiment and between **0000** H and 0FFF H for the low. However, when the data is written the system actually writes the modified data in the display RAM at locations corresponding to addresses **40000**-and **4**FFF H for the low resolution model and **4000** H-7FFF H for the high resolution model. The system distinguishes a memory read from ROM addresses 000-1FFF H from a memory write to modified data display RAM addresses **0000**-1FFF by circuitry external to the ROM and RAM chips shown in FIGS. **10**A and B.

All memory space above 32K (memory location **8000** H) is available for expansion. In the low resolution mode, memory addresses **5000**-**8000** H are also available for expansion.

In the illustrated computer system, two bits of display RAM **42** are used to define a pixel on the screen. Thus, an 8-bit byte of the display RAM defines 4 pixels on the screen. In the low resolution mode, 40 bytes are used to define a line of data as shown in FIG. 4A. This gives a horizontal resolution of 160 pixels. The vertical resolution is a 102 lines. The areas **610** of the screen defined by the display RAM **42** therefore requires $102 \times 40 = 4080$ bytes. More of the RAM **42** can be used for scratch pad by blanking the screen before the 102nd line is displayed as will be described more fully later.

In the high resolution mode, there are 80 bytes or 320 pixels per line as shown in FIG. 4B. The vertical resolution is 204 lines thus requiring 16,320 bytes of display RAM. This leaves 64 bytes of RAM for scratch pad memory.

In both the high and low resolution modes, the first byte of the display RAM **42** (address **4000** H) corresponds to the upper left and corner of the area **610** of the display screen **32** defined by the display RAM. The last byte of the first line in the low resolution mode has address **4027** H with the last byte of the first line in the high resolution mode having address **404**F H. In the low resolution mode, the highest display address (4FFF H) corresponds to a byte which corresponds to the lower righthand corner of the screen. Thus, as the RAM addresses increase, the position on the screen associated with the addressed bytes moves in the same directions as the TV scan: from left to right and from top to bottom.

The address chip **56** of the video processor **52** sequentially generates the addresses **4000** H to 4FFF H (7FFF H for the high resolution mode) as the screen is being scanned so that each byte defining 4 pixels is read in order to supply information necessary to display the corresponding 4 pixels of the picture. The 4 pixels associated with each byte are displayed with Pixel **3** defined by bits **6** and **7** shown on the left displayed first. Thus bits **6** and **7** of byte **4000** H define the pixel in the extreme upper lefthand corner of the screen area corresponding to the display RAM.

As noted earlier, two bits are used to represent each pixel on the screen. These two bits, along with a left/right bit (which will be more fully explained later) map the associated pixel to one of eight different "color" registers 0–7. Thus, two bits from the display memory together with the left/right bit identify or select one of the eight different color registers. If the two bits from the display memory have the binary value **00**, the color register will be color register **0** or **4** depending upon the left/right bit. Similarly, bits having the binary value **01** select register **1** or **5** depending on the left/right bit, etc.

Each color register is an 8-bit register for storage of output data from the computer. The binary bits in a selected color register define the color and intensity characteristics of the associated pixel to be displayed on the screen. The intensity of the pixel is defined by the three least significant bits of a color register, with **000** for darkest and **111** for lightest. The colors are defined by the 5 most significant bits. Thus each color register can define 1 of 2^3 intensity levels and 1 of 2^5 different colors. The CPU can change the data stored in the color registers which will cause the colors and intensities of subsequent pixels displayed to also change.

A horizontal color boundary register defines the horizontal position of an imaginary vertical line **64** on the screen **32**, referring now to FIG. **5**. The boundary line **64** can be positioned between any two adjacent bytes in the low resolution mode. The line is immediately to the left of the byte whose address is sent to the horizontal color boundary registor. For example, if the horizontal color boundary is set at 0 by the computer, the line will be just to the left of the byte **0** if it is set to **20**, the line will be between bytes **19** and **20** which corresponds to the center of the screen.

The left/right bit is an additional register identifying signal supplied by the video processor in response to the data stored in the horizontal color boundary register. If a byte is to the left of the boundary, the left/right bit of the four pixels associated with that byte is set to 1. The left/right bit is set to 0 for pixels associated with a byte to the right of the boundary line **64**. Color registers 0–3 are selected by a left/right bit = 1, i.e., for the pixels to the right of the boundary line, and registers **4**–**7** are selected for the pixels to the left of the boundary. Thus, if a byte read from the display RAM **42** has the values **00 11 10 00**, and was to the right of the boundary line, for example, the four pixels will be difined by color registers **0**, **3**, **2**, and **0**, respectively. However, if the byte was located to the left of the horizontal color boundary line, the four pixels will be defined by color registers **4**, **7**, **6**, and **4** respectively.

In the high resolution mode, if a value X is sent to the horozontal color boundary register, the boundary line will be between bytes having addresses 2X and 2X-1 which corresponds to the same position on the screen as the low resolution mode but between different bytes. Thus, for example, if the value **20** is sent, the boundary will be between **39** and **40**, corresponding to the center of the screen. To put the entire screen, including the rightside background, to the left of the boundary line **64**, the horizontal color boundary line register should be set to **44**.

If just four color registers are used, all the information necessary to generate the color and intensity of a

particular picture may be stored utilizing only two bits of storage together with the color registers. However, the left/right bit and eight registers give added flexibility. The color and intensity pattern of a picture stored in memory may be quickly modified in one step by selective placement of the horizontal color boundary. For example, if the entire screen is to the right of the horizontal color boundary, the colors and intensities of the pixels will be selected from color registers 0–3. On the other hand, placing the entire screen to the left results in the colors and intensities of color registers 4–7 being utilized. In this manner, the colors and intensities of the entire picture may be altered by merely changing the address of the horizontal color boundary.

On most television screens, the area 610 defined by the display RAM will be somewhat smaller than the total screen area. Thus there will generally be extra space on all four sides of the display screen not defined by the display RAM. The color and intensity of this area is defined by a two-bit "background" color register. These two bits along with the left/right bit combine to identify one of the 8 color registers which determines the color and intensity of the particular background area. For example, if the two bits contained in the background color register have the value 00 the color and intensity of the background area to the right of the boundary line 54 will be defined by the color register 0, with the area to the left defined by the color register 4, as shown in FIG. 5.

As described earlier, the function generator is enabled to modify pixel data when the data is to be written to a memory address "X" less than 4000 H (A14=0) and that a modified form of the data is actually written to memory location X+4000 H in the display RAM. A register hereinafter called the function generator register determines how the data is modified.

The functions performed on the pixel data are: "expand", "rotate", "shift", "flop", "logical-OR" and "exclusive OR". As many as four of these functions can be used at any one time and any function can be bypassed. However rotate and shift as well as logical-OR and exclusive OR are not done at the same time. The modified pixel data is stored in the display RAM whereby the pixels associated with the pixel data appear similarly modified when displayed.

Referring back briefly to FIG. 2, the microcycler has an 8-bit data bus 66 connecting the microcycler to the video processor 52 and I/O chip 50. The expand function expands the 8 bits contained on the microcycler data bus into 16 bits where each bit of the 8 bits represents one pixel. In other words, it expands 1-bit pixel into 2-bit pixel data. For example, a 0 on the data bus is expanded into one 2-bit pixel data value and a 1 on the data bus into another 2-bit pixel data value. Accordingly, the pixel data before being expanded is encoded at a first level which can be decoded into pixel data encoded at a second level. Thus, the pixel data on the 8-bit microcycler data bus is encoded at the first level as 1-bit pixel data and when expanded, it is encoded into pixel data at the second level, i.e., 2-bit pixel data. In this manner, two-color patterns can be stored in a ROM in half the space.

The generator functions shift, flop and rotate can be thought of as operating on the pixel data as a whole rather than the individual bits of each pixel. Each byte of the display RAM 42 can be though of as four 2-bit locations, each location corresponding to a pixel and storing one of four pixel data values (0–3) although the pixels are, of course, acturally elements of the picture displayed on the screen. The four pixel data values of the first byte, byte 0, will be referred to as P0, P1, P2 and P3. P0 is composed of the first two bits (or least significant bits) of the byte.

The shift function shifts the pixel data 0, 1, 2 or 3 pixel locations to the right. FIG. 6 illustrates the effect of the above-mentioned shifts upon the 3 bytes. The pixel data values are shifted relative to each other wherein the pixels that are shifted out of one byte are shifted into the next byte with the corresponding pixels on the screen appearing shifted a similar amount when displayed. Zeros are shifted into the first byte of a sequence.

The output of the flop function is a mirror image of its input, the original data. The pixel locations interchange pixel data values relative to each other, i.e., the first and fourth pixel location of each flopped byte exchange pixel data values as to the second and third as shown in FIG. 6. The four pixels associated with the flopped byte will similarly appear flopped relative to each other when displayed on the screen.

The rotate function rotates a four pixel by four pixel block of data 90° in clockwise direction such that the pixel data values are rotated relative to each other. FIGS. 7A and 7B illustrate an example of rotation. The sixteen pixel data locations correspond to sixteen contiguous pixels displayed on the screen.

The logical OR and exclusive OR functions operate on a byte as 8 bits rather than four 2bit pixel data. When the OR function is used in writing pixel data to the display RAM, the input pixel data is logical OR-ed with the contents of the display RAM location being accessed. The result of the logical OR is sent to the display RAM at the above location. The exclusive-OR function operates in the same way except that the data is exclusive OR-ed instead of logical OR-ed.

The illustrated system can accommodate up to four player control handles 12*a*–12*d* (FIG. 1) at once. Each handle has five switches (i.e., the trigger switch, and four joystick directional switches) and a potentiometer. The switches are read by the CPU 46 via input ports through the I/O chip 50 (FIG. 2). These input ports are diagrammatically shown in FIG. 8 as input ports ICH-IFH where the port number indicates its hexadecimal address. Thus the port at which the player control handle switches for player 1 are read has a hexadecimal address of 10H.

The trigger switch for each player control handle is read at bit 4 and the four directional switches of the joy-sticks are read at bits 0–3. The signals from the potentiometers are converted to digital information by an 8-bit analog to digital converter (FIG. 71A). The four potentiometers are read at input ports ICH-IFH (FIG. 8). All zeros are fed back when the potentiometer is turned fully counterclockwise and all 1's are fed back when turned fully clockwise.

The 24-button keypad 18 is read at bits 0–5 of ports 14–17H. The input data is normally zero and if more than one button is depressed, the data should be ignored.

The microcycler functions as an interface between the CPU and the peripheral devices. The CPU 46 of FIG. 2 has a 16-bit address bus and an 8-bit data bus connecting the CPU to the microcycler 60. Referring now to FIG. 9, the microcycler 60 combines the 16-bit address bus, A0–A15, and the 8-bit data bus, D0–D7, from the CPU 46 into one 8-bit microcycle data bus 66, MXD0-MXD7, connected to the address chip 56, the

data chip **54**, and the I/O chip **50**. One advantage of the microcycler is that the number of connector pins of the integrated circuit chips may be reduced since there are fewer connecting lines.

The microcycle data bus can have any of four modes which are defined by the contents or data carried by the microcycle data bus **66**. Its mode is controlled by control signals MC0 and MC1 which are generated by the data chip from a plurality of CPU control signals which will be more fully explained later. The microcycle data bus mode is also controlled by a CPU control signal $\overline{RFSH}$ which indicates that the lower 7 bits of the address bus contains a "refresh" address for refreshing the RAM dynamic memories. The CPU control signals are discussed more fully in the Zilog Z80-CPU Technical Manual and is hereby incorporated by reference as if fully disclosed herein. The microcycle modes are shown below:

TABLE 1

$\overline{RFSH}$	MC1	MC0	Microcycle Data Bus Contents
0	0	0	A0–A7 from the CPU
0	0	1	A0–A7 from the CPU
0	1	0	A0–A7 from the CPU
0	1	1	A0–A7 from the CPU
1	0	0	A0–A7 from the CPU
1	0	1	A8–A15 from the CPU
1	1	0	D0–D7 from the CPU
1	1	1	D0–D7 to the CPU

As can be seen above, when the $\overline{RFSH}$ signal is a logical zero or low state, the microcycler will allow the address bits A0-A7 from the CPU to be conducted through regardless of the state of MC0 or MC1 in order to refresh the RAM. However, when $\overline{RFSH}$ is a logical **1** (inactive), MC0 and MC1 detemine the contents of the microcycle data bus MXD0-MXD7.

The microcycler as well as the interconnection of the various integrated circuit chips of the low resolution mode system are shown in greater detail in FIGS. **10**A–C. The microcycler **60** comprises two 8-line to 4-line multiplexers **70** and **72**, having four output lines MXD4-MXD7 and MXD0-MXD3, respectively, and each having **4**A and **4**B input lines, an enable input E and a select input S.

The address lines A0–A3 and A8–A11, from a CPU address bus **73** from the CPU **56** are connected to the A and B input lines of the address multiplexer **72**, respectively. Similarly, the address bus lines A4–A7 and A12–A15 are connected to the **8** input lines of the address multiplexer **70**. The address multiplexers **70** and **72** can selectively conduct either the "low address" bits A0–A7, or the "high address" bits A8–A15, to the microcycle data bus MXD0-MXD7 when enabled. The multiplexers have common industry designation number 74LS257.

The microcycler further comprises an 8 line bidirectional data gate **74** having 8 input/output lines connected to a CPU data bus **75** from the CPU **56**, 8 input-/output lines connected to the microcycle data bus MXD0-MXD7, a direction input DIR and an enable input CD. The data gate **74** can conduct data either from the CPU data bus **75** to the microcycle data bus **66** or from the microcycle data bus **66** to the CPU data bus **75** as determined by the state of the DIR input when enabled.

These three logic elements **70**, **72**, and **74**, function as a 24-line to 8-line multiplexer to sequentially conduct groups of address signals and groups of data signals to the microcycle data bus, in response to the control signals MC0 and MC1 and the CPU control signal $\overline{RFSH}$. Alternatively, the gate **74**, of the microcycler further functions as a gate for conducting data signals from the microcycle data bus to the CPU data bus.

The microcycle data bus **66** is connected to the MXD0-MXD7 inputs of the address chip **56**, data chip **54** and I/O chip **50**. The microcycler **60** had input lines **76**, **78**, and **80** for the control signals $\overline{RFSH}$ MC1 and MC0 respectively. The input line **76** operably connects the CPU **56** $\overline{RFSH}$ output to the inputs of a pair of NAND gates **81** and **82**. The output of the NAND gate **81** is inverted by an inverter **84** whose output is connected by a line **85** to the enable 'E' of the multiplexers **70** and **72** and is also connected to the input of a NAND gate **86** whose output is connected to the enable input CD of the gate **74**. Thus, when the CPU **56** prepares to refresh the RAM, the refresh control signal, $\overline{RFSH}$, will go to the low state causing the output of the NAND gate **81** to go high which is inverted by the inverter **84**. A low state at the enable input E of the multiplexers **70** and **72** causes these logic elements to be enabled whereby address signals can be conducted to the microcycle data bus **66**. A low state on the line **85** also causes the output of the NAND gate **86** to go high which is presented to the enable input CD of the gate logic element **74** causing the gate **74** to be disabled whereby the outputs of the logic gate **74** are forced to an off state.

The output of the NAND gate **82** is connected to an inverter **88** having an output line **90** connected to the select inputs S of the multiplexers **70** and **72**. Thus, when the refresh multiplexer control signal $\overline{RFSH}$ is low, the output of the NAND gate **82** is high. Consequently, the output of the inverter **88** is low. A low state presented at the selector input S causes address bits presented at the A inputs to be conducted to the multiplexer data bus. Thus when $\overline{RFSH}$ is low, the low address A0–A7, is conducted to the microcycle data bus for use in the refresh cycle.

The input lines **78** and **80** connect data chip **54** MC1 and MC0 outputs to the inputs of NAND gates **81** and **82**, respectively. When the control signal $\overline{RFSH}$ is high, i.e., a refresh is not being done, the outputs of the NAND gates **81** and **82** are determined by the microcycler control signals MC1 amd MC0 respectively, from the data chip **54**. Thus, when the control signal MC1 is in a low state, the output line **85** is also in a low state which enables the multiplexer logic elements **70** and **72** and disables the gate logic element **74** as when the $\overline{RFSH}$ signal is low. Thus, either the low address or the high address will be conducted onto the microcycler data bus as determined by the control signal MC0. When the control signal 'MC0' is in a low state, the output line **90** is also low which causes the low address to be conducted onto the microcycler data bus. If MC0 is at a high state, the high address is conducted to the microcycler data bus.

Control signal MC1 (and $\overline{RFSH}$) at a high state results in a high state at control line **85** which disables the mutliplexers **70** and **72** and enables the gate **74**. Thus, the data on the data bus **75** for bits D0–D7 from the CPU **56** will be gated onto the microcycler data bus MXD0-MXD7, or the data on the microcycler data bus will be gated onto the data bus of the CPU, depending upon the direction input DIR. The direction input DIR is connected by a line **92** to the output of the NAND gate **82**. Thus, the state of the control signal MC0 (with

RFSH high) determines the direction that the gate **74** will gate the data. For example, if MC0 is in a low state, the output of the NAND gate **82** will be high resulting in the contents of the data bus D0–D7 being gated onto the microcycler data bus; if MC0 is high, the contents of the microcycler data bus will be gated onto the data bus D0–D7 to the CPU **56**.

A power supply indicated generally at **93** supplies +15v, +10v, +5 V and −5v to the system. A clock circuit **94** comprising a 14.31818 MHz oscillator **96** and divider stages **98**, provides a 7 MHz clock signal 7M, and an inverted 7 MHz clock signal $7\overline{M}$, to the 7M and $7\overline{M}$ inputs, respectively, of the data chip **54**. A clock signal Φ G, generated by the data chip **54** from the 7M and $7\overline{M}$ clock signals, is outputted to a buffer **100** having output lines for clock signals Φ and $\overline{\Phi}$. The clock signals Φ1 and $\overline{\Phi 2}$ are connected to the Φ and $\overline{\Phi}$ inputs of the address, data and I/O chips.

The CPU address bus **73** and data bus **75** are connected to the system ROM **48** having inputs A0-A12 and D0-D7 for the address and data bits, respectively. The address bus **73** and data bus **75** are also connected to the cassette ROM **24** (not shown) and the extension plug **77** (for expanding the system).

The system ROM chip **48** has a chip select input $\overline{CS}$ connected to the output of the chip select logic indicated at **79***a* and *b* with the cassette ROM chip select input $\overline{CCS}$ also connected to the output of the chip select logic **79***a* and *b*. The outputs of the logic **79***a and b* are functions of the CPU control signals MEMORY REQUEST ($\overline{MREQ}$) and READ ($\overline{RD}$), the address bits A13–A15 and the memory disable signals SYSEN, CASEN, AND $\overline{BUZOFF}$ from the extender plug **77**.

DATA CHIP

The CPU control signal lines MEMORY REQUEST, INPUT/OUTPUT REQUEST, READ, and MACHINE CYCLE 1 are operatively connected to the data chip inputs $\overline{MREQ}$, $\overline{IORQ}$, $\overline{RD}$, and $\overline{M1}$, respectively, from the CPU **56**. Two more control lines carrying control signals generated by the address chip **56** are connected to the data chip inputs LTCHDO, and $\overline{WRCTL}$, respectively. The data chip had VDD input connected to a +5 volts source, a VGG input connected to a +10 volt source, and a DVSS input connected to ground. Two more inputs SERIAL 0 and SERIAL 1 are grounded since they are used in the high resolution mode.

The data chip **54** has a plurality of outputs including the memory data inputs and outputs MD0–MD7, connected by a memory data bus **102** to the display RAM **42**. The data chip input/output MD0 is operatively connected to the data input, D1, and data output D0, ports of the RAM chip **104***a*, with other memory data input/outputs, MD1–MD7 of the data chip similarly connected to seven RAM chips **104***b–h*. The data chip also has analog video outputs R-Y, B-Y, VIDEO and +2.5 volts reference operatively connected to the RF modulator **58** (not shown). The data chip has clock signal outputs, VERTICAL DRIVE (VERT. DR.) and HORIZONTAL DRIVE (HORZ. DR.), connected to the address chip **56**. Finally, the data chip has control signal outputs MC0 and MC1 connected to the microcycler (as noted before) and an output $\overline{DATEN}$ used to generate the write enable signal, $\overline{WE}$, for the RAM chips.

A schematic block diagram of the data chip **54** is shown in FIGS. **11A-11F**. The microcycle generator **106** of FIG. **11A** generates the microcycle control signals MC0 and MC1 from the CPU control signals $\overline{IORQ}$, $\overline{MREQ}$, $\overline{RD}$, and $\overline{M1}$. Also generated are microcycle decoder control signals LOAD LOW (LDL1) and LOAD HIGH (LDH1) for loading the low and high address bits respectively.

A more detailed schematic diagram of the data chip is shown in FIGS. **13A-EE** with a composite diagram of these figures shown in FIG. **14**. The microcycle generator has an input line **108** for the $\overline{MREQ}$ control signal and an input line **110** for the $\overline{IORQ}$ control signal, both of which are connected to the inputs of a NAND gate **112** whose output is connected by an inverter **114** to the inputs of a pair of NOR gates **116** and **118**. The microcycle generator has an input line **120** for the CPU control signal $\overline{RD}$ which is connected to the other input of the NOR gate **116**. The output of the NOR gate **116** is connected by an inverter **122** to the input of an AND gate **124**.

The output of the NOR gate **118** is connected to the input of a NOR gate **126** whose output is connected to the input of a NOR gate **128** with the output of the AND gate **124** connected to the other input of the NOR gate **128**. The output of the NOR gate **128** is connected by a gating transistor **130** which acts as a delay to the input of a NOR gate **132**. The gate of the transistor **130** is connected to the clock signal line Φ2. Φ2 is the complement of the clock signal Φ and a clock signal Φ1 is Φ uncomplemented.

The output of the NOR gate **132** is connected by a gating transistor **134** (which also acts as a delay) to an inverter **136** having an output line **138**. The gate of the "delay" transistor **134** is connected to the clock signal Φ1.

The output line **138** is connected to the inputs of the AND gate **124** and the NOR gate **126** and is also connected by a delay transistor **140** to the input of a NOR gate **142**. The gate of the transistor **140** is connected to the clock signal $7\overline{M}$. The output of the NOR gate **142** is connected by a delay transistor **144** to an inverter **147** having an output line **148**. The gate of the transistor **144** is connected to the 7M clock signal.

The output line **148** of the inverter **146** is connected to an input of a NOR gate **150** whose output is connected to an inverter **152**. A transistor **154** is connected to the voltage source VDD and to ground by a transistor **156**. The gate of the transistor **154** is connected to the output of the inverter **152** and the gate of the transistor **156** is connected to the output of the NOR gate **150**. The junction of the transistors **154** and **156** at the line **80** carries the microcycle control signal MCO.

The E,ovs/MREQ/ and $\overline{IORQ}$ input lines, **108** and **110**, are connected to the input AND gate **160** whose output is connected to a NOR gate **162**. The output line **138** of the inverter **136** is also connected to the input of a NOR gate **164** whose output is connected to the input of the NOR gate **162**. The output of the NOR gate **162** is connected by a delay transistor **166** to a NOR gate **168**. The gate of the transistor **166** is connected to the Φ2 clock signal. The output of the NOR gate **168** is connected by a delay transistor **170** to an inverter **172** having an output line **174**. The gate of the transistor **170** is connected to the Φ1 clock signal.

The output line **174** is connected to an input of the AND gate **160** and inputs of the NOR gates **118** and **164** and is also connected by a delay transistor **176** to a NOR gate **178**. The gate of the transistor **176** is connected to the $7\overline{M}$ clock signal. The output of the NOR gate **178** is

connected by a delay transistor **180** to an inverter **182** having an output line **188**. The gate of the transistor **180** is connected to the clock signal 7M.

The output line **188** of the inverter **182** is connected to a NOR gate **190** whose output is connected to an inverter **192**. A gating transistor **194** is connected to the voltage source VDD and to a transistor **196** which is connected to ground. The output of the inverter **192** is connected to the gate of the transistor **194** and the output of the NOR gate **190** is connected to the gate of the transistor **196**. The junction of the transistors **194** and **196** at the line **78** carries the microcycle control signal MC1.

The state of the control signal MCl is the same as the output of inverter **192** since a high state (logical **1**) output of the inverter **192** will turn on the transistor **194** causing the MC1 line **78** to also go high. Similary, a high output from the NOR gate **190** (when inverter **192** is at a low state) causes the transistor **196** to turn on which causes the MC1 control signal line **78** to also go low. The state of the MCO control line **80** is similarly the same as the state of the inverter **152**.

The microcycle generator has another input **200** for the CPU control signal $\overline{M1}$ which is connected to the input of a NOR gate **202** having another input connected to the input line **110** for the CPU control signal $\overline{IORQ}$. The output of the NOR gate **202** is connected to the inputs of the NOR gates **168, 132, 178, 142, 190** and **150**.

The $\overline{M1}$ CPU control signal is active when low (logical **0**) and indicates that the current machine cycle is an operaton code fetch cycle of an instruction execution. Thus, the $\overline{M1}$ control signal is normally high (logical **1**) whenever the CPU is accessing a peripheral device such as a video processor. Hence, the NOR gate **202** having a logical **1** presented at the input will output a logical O. This logical O is presented at the inputs of the NOR gates **132, 168, 142, 178, 150** and **190** resulting in these NOR gates operating as inverters whenever the /OVs/M1/ control signal is high.

Similarly, whenever $\overline{M1}$ goes low indicating that the current machine cycle is the fetch cycle of an instruction execution, $\overline{IORQ}$ will normally be high with the same effect upon the above-mentioned NOR gates with an exception. $\overline{IORQ}$ and $\overline{M1}$ will both go low during an "interrupt ackowledge" cycle. With these two control signals both at a low state, the NOR gate **202** will output a high state causing the NOR gate **150** to produce a low state forcing the control signal MC0 to a high state or 1. In a similar fashion, the output of the NOR gate **190** is forced to a low state which also forces the control signal MC1 to a high state.

Referring back to the microcycle modes set out in Table I, it is seen that where MC0 and MC1 are both a logical **1**, the microcycler will gate data from the microcycler data bus to the CPU data bus. This data was placed on the microcycler data bus by the peripheral device initiating the interrupt and will be used by the CPU in its response to the interrupt signal.

The "MEMORY REQUEST" control signal, $\overline{MREQ}$, is active when low and indicates that the address bus of the CPU holds a valid address for a memory read or a memory write operation. The "INPUT-/OUTPUT REQUEST" control signal $\overline{IORQ}$, is also active when low and indicates that the lower half of the address bus holds a valid I/O address for I/O read or write operation. The read control signal, $\overline{RD}$, is active when low and indicates that the CPU wishes to read data from the memory or an I/O device. When high, $\overline{RD}$ indicates the CPU wishes to write data to memory or an I/O device.

The generation of the microcycler control signals MC0 and MC1 as a function of the CPU control signals $\overline{MREQ}$, $\overline{IORQ}$, and $\overline{RD}$ together with clock signals $\Phi 1$ and 7M, are illustrated for a plurality of read and write operations in FIGS. 12A-G. An example of MC0 and MC1 as functions of $\overline{MREQ}$ $\overline{RD}$, and the clock signals $\Phi 1$ and 7M, is shown for a memory write operation in FIG. 12A.

A clock state, T, is defined by one complete period of the clock signal Φ. At the beginning of the initial clock state T1, the CPU control signals $\overline{MREQ}$ $\overline{RD}$ are at the same state as the previous clock state which is a high state with the microcycler control signals MC0 and MC1 also at the same state as the previous clock state which is a low state. During T1, after the clock signal $\emptyset$ goes low, $\overline{MREQ}$ goes low which indicates that the CPU address bus holds a valid address for the memory write operation.

Referring to FIG. **13**, the NAND gate **112** has the control signals $\overline{MREQ}$ and $\overline{IORQ}$ presented at its inputs which are both inactive or a logical 1 at the beginning of T1. When $\overline{MREQ}$ goes low, the output of the NAND gate **112** goes high which is inverted by the inverter **114** presenting a low state to one input of the NOR gate **118** and to one input of the NOR gate **116**. the other input of the NOR gate **118** is connected by the line **174** to the output of the inverter **172**.

Since $\overline{M1}$ is at a high state, the NOR gates **142, 178, 150** and **190** function as inverters. Thus the output of the inverter **172** at line **174** is at the same state as the previous MC1 state since there are an even number of "inverters" between the line **174** and the gate of the output transistor **194** (except insofar as the 7M and $\overline{7M}$ delay transistors **176** and **180** delay any change in MC1 resulting from a change in the output of the inverter **172** of line **174**).

Thus since MC1 is at a low state, the line **174** connected to the input of the NOR gate **118** is at a low state with the other input of the NOR gate **118** at a low state, as noted before. This produces a high state at the output of NOR gate **118** which results in a low state at the output of the NOR gate **126**.

The control signal $\overline{RD}$ is at a high state indicating a write operation which causes the NOR gate **116** to output a low state which is inverted by the inverter **122** to produce a high state. The line **138** is at the same state (except for a delay) as the previous MCO state (in a manner similar to that for the line **174**) which causes the output of the AND gate **124** to be low. The NOR gate **128** thus has a low state presented at both of its inputs which results in a high state produced at its output.

This output is connected when the clock signal Φ **2** goes high and is inverted by the NOR gate **132**. The transistor **134** conducts this output when the clock signal $\emptyset 1$ goes high resulting in the output of the inverter **136** going high. thus the output of the inverter **136** assumes the same state as the NOR gate **128** on the positive edge **200** (i.e., going from a low state to a high state) of the clock signal Φ (FIG. 12A).

The high state at the output of the inverter **136** is conducted by the transistor **140** when the clock signal $\overline{M}$ goes high which is inverted by the NOR gate **142** and conducted by the transistor **144** when the clock signal 7M goes high. The logical **0** is then inverted by the inverter **146**, NOR gate **150**, and inverter **152** to pro-

duce a high state at the output of the inverter **152** which turns on the transistor **154** to produce the high state at the line **86** which is the MCO control signal line. Referring back to FIG. **12A**, it is seen that the control signal MCO goes to a high state on the positive edge **202** of the clock signal **7M** which follows the positive edge **200** of the clock signal Φ occurring after the CPU control Signal $\overline{MREQ}$ goes low.

When MC0 changes from a low state to a high state, the contents of the microcycle data bus changes from the low address, A0–A7, to the high address, A8–A15. Thus the 16 address bits from the CPU are transmitted to the video processor and I/O chip in 2 eight-bit groups or slices.

The output of the inverter **136** rising to a high state causes the NOR gate **164** having an input connected to the output line **138** of the inverter **136** to fall to a low state. the output of the AND gate **160** is also low since $\overline{MREQ}$ is low causing the output of the NOR gate **162** to go high. This high output appears at the output of the inverter **172** at the line **174** on the positive edge **204** (FIG. **12A**) of the clock signal Φ marking the start of the clock state Tw.

The high state then appears at the gate of the transistor **194** on the positive edge **206** of the clock signal **7M** (FIG. **12A**) causing the control signal MC1 to rise to a logical **1**. The $\overline{RD}$ signal is at a high state (indicating a write operation) which causes the NOR gate **116** to output a "zero" which is inverted by the inverter **122**. The output of the inverter **136**, which is at a high state, is returned to the AND gate **124** causing the AND gate to output a "one" which causes the NOR gate **128** to output a "zero". This low state appears at the output of the inverter **136** on the positive edge **204** of the clock signal Φ (FIG. **12A**). The low state then appears at the MC0 control signal line **80** on the positive edge **206** of the 7M clock signal (FIG. **12A**).

With MC0 at a low state and MC1 at a high state, the contents of the CPU data bus are gated onto the microcycle data bus. Thus data placed on the CPU data bus is transmitted to the peripheral devices on the microcycle data bus.

During clock state T3, $\overline{MREQ}$ returns to a high state. Since $\overline{MREQ}$ as well as the output of the inverter **172** at line **174** and $\overline{IORQ}$ are at a high state, the output of the AND gate **160** is high which causes the output of the NOR gate **162** to go low. This low output appears at the line **172** on the positive edge **208** of the Φ1 clock signal at clock state T1. The low state at line **172** appears at the gate of the output transistor **194** (with a high state at the gate of the transistor **196**) at the positive edge **210** of the clock signal **7M** causing the microcycle control signal MC1 to go low. The microcycler is now ready to transmit the low address of the next address presented at its inputs. The relationship of the microcycler control signals MC0 and MC1 to the CPU control signals and system clock signals Φ and **7M** is shown for a variety of other read and write operations in FIGS. **12B–G**.

The microcycler further comprises a NOR gate **201** having inputs connected to outputs of the inverters **146** and **182** and to the clock signals Φ1. A NOR gate **203** also has inputs connected to the output of the inverter **182**, to the output of the inverter **146** by an inverter **205**, and to the clock signal input Φ. An output line **226** of the NOR gate **201** carries the microcycle decoder control signal LDL1 which is a logical **1** when the outputs of the inverters **146** and **182** are a logical **0** (corresponding to both MC0 and MC1 a logical **0**), together with Φ1 a logical **0**. An output line **228** of the NOR gate **203** carries the signal LDL1 which is a logical **1** when MC0 is a logical **1**, MC1 a logical **0** and Φ1 a logical **0**.

Each of the address, data, and I/O chips has a plurality of registers. Each of these registers is individually addressable by the CPU for inputting or outputting data contained in the register.

The data chip is shown in FIG. **11B** to have microcycle decoder **212** which assembles **11** address bits A0–A10 from the low address bits, A0–A7, and high address bits, A8–A15, transmitted from the microcycle data bus. The microcycle decoder **212** has an eight bit input line connected to all the bits of an eight-bit data chip data bus **66***a* and a three-bit input line connected to the lower 3 bits of the data bus **66***a*. The microcycle data bus **66** is connected to the data bus **66***a* by a tristate buffer **273** (FIG. **11C**). (Other buffers shown in the more detailed schematic FIG. **13** are omitted from the FIGS. **11A–F** for clarity).

The microcycle generator **106** (FIG. **1A**) generates control signals LDL1 and LDH1 to signal that the microcycle data bus contains the low address bits or the high address bits, respectively. The microcycle decoder **212** is operatively connected to the microcycle generator to input these control signals such that the decoder latches up the low address bits from the eight bit input lines when LDL1 is high and subsequently the high ddress bits A8–A10 on the three bit input line when the control signal LDH1 is a high. The 11 bits latched in the microcycle decoder are utilized to address the registers on the data chip. The microcycle decoder has an 11 bit output bus A0–A10 which is connected to an address decoder **214** which decodes the address bits to activate one of a plurality of register select lines **216–222**. Register select line **216** actually represents eight register select lines for eight different "color" registers **224**.

In addition to the proper address, the register select lines **216–221** require the concurrence of a data chip generated control signal, $\overline{OUTPUT}$, in order to be activated. The eight color register select lines **216** further require a CPU generated control signal $\overline{IORQ}$. The register select line **222** requires the concurrence of another data chip generated control signal $\overline{INOUT}$, to be activated. The $\overline{INPUT}$ and $\overline{OUTPUT}$ signals are functions of z-80 CPU control signals including $\overline{MREQ}$, $\overline{IORQ}$, $\overline{RD}$ and $\overline{M1}$ and are generated to compensate for any delay caused by the microcycler.

The register select lines **216–221** are operatively connected to eight color registers **0–7**, an "expand" register, "function generator" register, "vertical blank" register, "horizontal color boundary" and "background color" register and "low/high resolution mode" register, respectively. The line **222** is operatively connected to a multiplexer, which when activated causes the multiplexer to select the output of an "intercept" register. In this manner, the CPU may select any particular register of the data chip by transmitting an address corresponding to the register which is transmitted in two groups, the low and high addresses, by the microcycler to the microcycle decoder which reassembles the address bits into address bits A0–A10. These bits are then decoded and the corresponding register select line is activated which enables the addressed register to input or output data to the CPU via the microcycle data bus.

The microcycle decoder **212** and address decoder **214** are shown in greater detail in FIG. **13**. The microcycle decoder **212** comprises an 11-bit latch with the eight least significant bits A0–A7 each having an input con-

nected to the D0–D7 lines, respectively, of the data bus 66*a*. Each of the A0–A7 bits of the latch also have an input connected to the LDL1 control signal line 226 and an input connected the line 226 through an inverter 227. The most significant bits A8–A10 each have an input connected to the D0–D2 lines, respectively, of the dat bus 66*a* and each has an input connected to the LDH1 control signal input line 228 directly, and an input connected to the line 228 through an iverter 229.

The A0 bit has output lines A0 and its complement $\overline{A0}$ with the A1 bit having outputs A1, $\overline{A1}$, etc. all connected to the address decoder 214.

An example of a bit circuit of the latch of the microcycle decoder is shown in FIG. 13. The input of the A0 bit circuit of the latch is connected to a gating transistor 230 whose gate is connected to the LDL1 control signal line 226. The 1 input is also connected to the D0 line of the data bus 66*a* which carries (among others) address bits A0 and A8. Transistor 230 is connected to an inverter 232 whose output is the $\overline{A0}$ output line of the A0 latch which is also connected to an inverter 234 whose output is the A0 output line. The output of the inverter 234 is connected to a gating transistor 236 whose gate is connected to the output of inverter 227 (FIG. 13) which carries $\overline{LDL1}$. The output of the transistor 236 is connected to the input of inverter 232.

The bit of the D0 line of the data bus 66*a* is presented to the input of the transistor 230 which is gated by the LDL1 control signal when the D0 line carries the address bit A0. The inverter 232 inverts the address bit A0 and outputs the bit as address bit $\overline{A0}$. The output of the ivnerter 232 is inverted by inverter 234 whose output is the address bit A0. The bit A0 is stored in the A0 bit of the latch in this manner.

The address decoder is shown in FIG. 13) to comprise a programmed logic array (PLA) having a plurality of input lines A0–A10 and $\overline{A0}$–$\overline{A10}$ connected to the corresponding output lines of the microcycle decoder 212. A plurality of output lines 217–222 and 238–253 are selectively coupled to the PLA input lines by a plurality of pull-down transistors, each of which is represented by a small circle 254.

An example of these pull-down transistors, the transistor coupling the input line A10 to the output line 238 is shown in greater detail in FIG. 16. If the address bit A10 equals 1, i,e., a high state, the A10 address line will cause the pull-down transistor 254 to turn on which "pulls down" the output line 238 to ground.

Each output line 217–1222 and 238–253 is connected to the voltage source VDD by a pull-up transistor 260 referring back to FIG. 13. A logical 1 on any address bit input line coupled to an output line will cause that output line to be grounded which is a low state or logical 0.

The input lines of the PLA are selectively coupled to the output lines by the pull-down transistors 254 such that a particular output line will produce a logical 1 only when a predetermined address consisting of a predetermined combination of 1's and 0's are presented on the address input lines A0–A10 and $\overline{A0}$–$\overline{A10}$.

The output lines 217–221 are coupled to the $\overline{OUT\ PUT}$ control signal line 262 by pull-down transistors 264 so that in addition to the proper address, the $\overline{OUT\ PUT}$ control signal must be low in order for one of these control lines to output a logical 1. For example, if the address bits A7, A6, A5, A4, A3, A2, A1 and A0 (A7 being the most significant) have the values 0, 0, 0, 1, 1, 0, 0 and 1, respectively, the control line 217 will be a logical 1, if the $\overline{OUTPUT}$ control signal is also low. Since the PLA output line 217 is the "expand" register select line, the expand register will be selected if the address bits A7–A0 have the value 00011001 or 19H. Thus 19H is the hexadecimal address of the expand register. If any of the address bits A7–A0 are different from the values just listed, the expand register will not be selected. For example, if the address bit A7 is a 1 instead of a 0, the pull-down transistor 254 associated with the A7 input line and the PLA output line 217 will be turned on which pulls the output line 217 to a logical 0.

The output line 222 has an associated address 8H and, as seen in FIG. 11B, is the "intercept" register select line. the intercept register select line 222 is coupled to an $\overline{INPUT}$ control signal line 266 by a pull-down transistor 268 so that in addition to the address 8H, the $\overline{INPUT}$ control signal must be low in order for the register select line 222 to be at a logical 1 state which will select the intercept register.

The output lines 238 and 239 are connected to the input of a NOR gate 270 whose output is connected to a NOR gate 272. The other inputs of the NOR gate 272 are the control signal line 262 and a $\overline{IORQ}$ control signal line 270. Thus, either of two hexadecimal addresses, BH or OH, will cause the output of the NOR gate 270 to go low which will cause the output of the inverter 272 to go high if the control signal $\overline{OUTPUT}$ and the control signal $\overline{IORQ}$ are both low.

The output lines 240 and 241, 242 and 243, etc. are also connected to a plurality of NOR gates 271 which are connected to a plurality of NOR gates 272 which also have inputs connected to the $\overline{OUTPUT}$ control signal lines 262 and $\overline{IORQ}$ control signal line 270. The output lines 216 of the NOR gates 272 are the register select lines for the color registers 224, as seen in FIG. 11B.

Thus, either the hexadecimal address 8H or BH will select color register 0. There is an extra address for each color register to accomodate a color block transfer operation which will be described in more detail later.

Thus, the CPU may address or select a particular register in order to input or output data from or to that register by transmitting the register's associated address together with the proper CPU control signals. The microcycler transmits this address in two groups, the low and high addresses, which are then reassembled by the microcycler decoder 212. The address latched in the microcycler decoder is decoded by the address decoder 214 which activates a register select line. The register select line enables the associated register to input from or output data to the microcycle data bus. The hexadecimal addresses for the input and output ports or registers for the Address, Data and I/O chips are set forth in Table II below:

TABLE II

OUTPUT PORTS PORT ADDRESS	FUNCTION	INPUT PORTS PORT ADDRESS	FUNCTION
ØH	Color Register Ø	8H	Intercept Feedback

TABLE II-continued

OUTPUT PORTS PORT ADDRESS	FUNCTION	INPUT PORTS PORT ADDRESS	FUNCTION
1H	Color Register 1		Multiplexer
2H	Color Register 2	EH	Vertical Feedback
3H	Color Register 3		Register
4H	Color Register 4	FH	Horizontal Feedback
5H	Color Register 5		Register
6H	Color Register 6	1ØH	Player 1 Handle
7H	Color Register 7	11H	Player 2 Handle
8H	Low/High Resolution	12H	Player 3 Handle
	Register	13H	Player 4 Handle
9H	Horizontal Color	14H	Keypad Column Ø
	Boundary Register		(right)
	Background Color	15H	Keypad Column 1
	Register	16H	Keypad Column 2
AH	Vertical Blank	17H	Keypad Column 3
	Register		(left)
BH	Color Block Transfer		
CH	Function Generator		
	Register		
DH	Interrupt Feedback		
	Register		
EH	Interrupt Enable and		
	Mode Register		
FH	Interrupt Line Register		
1ØH	Master Oscillator Register		
11H	Tone A Frequency Register		
12H	Tone B Frequency Register		
13H	Tone C Frequency Register		
14H	Vibrato Register		
15H	Tone C Volume, Noise Modulation		
	and MUX registers		
16H	Tone A Volume and Tone B		
	Volume Registers		
17H	Noise Volume Register		
18H	Sound Block Transfer		
19H	Expand Register		

The function generator of the video processor can perform a variety of functions or modifications to the pixel data as the data is a written to the display RAM by the CPU from the system or cassette ROM. The function generator is enabled when the address of the data is less then **4,000H** (address bit **A14** equal to 0). The function generator is contained on the data chip **54** and is shown in FIG. **11C** to comprise a 7-bit function generator register **274** which is connected to the data bus **66***a* by a 7-bit input line **276**. The data chip data bus **66***a* is operatively connected to the microcycler data bus **66** by the tri-state buffer **273** shown in FIG. **13** to comprise 8 units **273***a–h*. (Buffer unit **273***a*, typical of the units **273***a–h*, is shown in greater detail in FIG. **17**). The output **1** of each unit is connected to the data bus **66***a* by a buffer **611** (logically similar to that shown in FIG. **18**).

The data contents of the register **274** determine how the pixel data is to be modified. The CPU **46** (FIG. **2**) may output data to the register **274** by transmitting the address CH to the microcycle decoder **212** and address decoder **214** of FIG. **11B** which activates the function generator register select line **218**. When the register select line **218** is activated, the function generator register **274** is enabled to input (or latch up) the 7 bits of data transmitted by the CPU. The bits of the data contained within the function generator register **274** relate to different modifications of the pixel data as shown below in Table III:

TABLE III

Bit 0	Least Significant Bit of Shift Amount
1	Most Significant Bit of Shift Amount
2	Rotate
3	Expand
4	OR
5	Exclusive-OR
6	Flop

The order in which the functions are performed is as follows: expansion is done first; rotating or shifting; flopping; and logical-OR or exclusive-OR. The video processor performs the modifications in response to the data stored in the function generator register. A logical **0** or **1** in the bits 2–6 determine whether or not the corresponding function is performed. Bits **0** and **1** of the function generator register determine the amount, if any, of the shift. As many as four of thes functions can be used at any one time and any function can be omitted. However, rotate and shift as well as logical-OR and exclusive-OR cannot be done at the same time.

The expand function expands the 8 bits contained on the microccyle data bus **66** four bits at a time into 16 bits. It expands a **0** on the microcycle data bus into one 2-bit pixel and a **1** into another 2-bit pixel. Thus, two-color patterns can be stored in the system or cassette ROM in half the memory space.

The expand function is performed by an expander indicated generally at **278**. During each write operation to the display memory using the expander **278**, either the upper half (**D4–D7**) or the lower half (**D0–D3**) of the data bus **66***a* is expanded but the expand function may be bypassed, as will be more fully explained below. The half that is expanded is determined by an expand flip-flop **282** having a reset input connected to the function generator register select line **218** and an output

connected to a multiplexer **282**. The flip-flop **280** is reset by an output to the function generator register **274** and is toggled after each write operation to the display RAM in which the function generator is utilized. The multiplexer **282** is responsive to the flip-flop to select either the upper half, or lower half, of the bits contained on the data bus **66***a* and output the selected bits on a 4-bit multiplexer data bus **284** for expansion. The upper half of the data bus **66***a* is expanded when the flip-flop **280** is at a low or zero state, and the lower half is expanded when the flip-flop toggles to the high state.

A 4-bit "expand" register **286** having a 4-bit output line **288** determines the pixel values into which the data contained on the multiplexer data bus **284** can be expanded. A 0 on thwe multiplexer data bus will be expanded by an expand decoder **290** connected to the expand register output bus **288** and multiplexer output bus **284** into the pixel value determined by bits **0** and **1** of the expand register **286**. A 1 on the multiplexer data bus will be expanded into the pixel value determined by bits **2** and **3** of the expand register **286**. Thus, the pixel data on the multiplexer data bus is encoded at the first level to identify either the **0** and **1** or **2** and **3** bits of the expand register. In this manner, the data from the computer is decoded into pixel data encoded at the second level, i.e., the pixel data stored in the expand register, which is transmitted when the particular bits of the expand register are selected or identified. The second level pixel data is stored in the display RAM after other modifications, if any, are performed. The pixel data stored in the RAM, when read, is utilized together with the left/right bit to select a color register to generate the pixels of the display as explained hereinbefore.

The expand register **286** has an address **19H** at which the CPU may access the expand register in order to change the contents. The address **19H** (together with an $\overline{\text{OUTPUT}}$ signal) transmitted to the address decoder **214** (FIG. **11B**) causes the expand register select line **217** to be activated which enables the expand register **286** to receive data on the data bus **66***a*. In this manner, the pixel data values into which data is expanded may be changed.

The expander **278** is shown in greater detail in FIG. **13**. The expand flip-flop **280** has a reset input R connected to the function generator register select line **218** so that the flip-flop is reset with each output of data to the function generator register **274**. The flip-flop has a clock input C connected to a clock input line **292** and a clock input $\overline{C}$ also connected to the clock signal input line **292** through an inverter **294**. (The line **292** carries a clock signal, $\overline{\text{SHIFT}}$ which will be more fully explained hereinafter.)

An output $\overline{Q}$ is connected to a D input of the flip-flop **280** so that the flip-flop toggles with each clock signal which occurs with each write to the display RAM. The output $\overline{Q}$ is also connected by a line **296** to the gates of four transistor switches **298***a–d* of the multiplexer **282**. An output Q of the flip-flop is connected by a line **300** to the gates of four transistor switches **302***a–d*. (The flip-flop **280** is shown in greater detail in FIG. **19**).

The inputs of the transistor switches **298***a–d* are connected to the four most significant bits (the upper half) of the data bus **66***a* with the transistor switches **302***a–d* connected to the four least significant bits (the lower half) of the data bus **66***a*. If the state of the expand flip-flop **280** is a logical **1**, the transistor switches **302***a–d* will conduct the lower half of the data bus **66***a* to the expander. Otherwise, a logical **0** will cause the transistor switches **298***a–298d* of the multiplexer **282** to conduct the upper half of the data bus **66***a*.

The output of the transistor switches **302***d* and **298***d* are connected by an inverter **304** to the gates of a pair of transistor switches **306***a* and **306***b* of the expander decoder indicated generally at **290**. The output of the inverter **304** is also connected by an inverter **308** to the gates of a pair of transistor switches **310***a* and **310***b*.

A line **312***a* is connected to ground by a transistor **314** whose gate is connected to the output of bit **0** of the expand register **286**. (The logic design of each bit of the expand register is similar to that of the bit of the latch of the microcycle decoder **212** shown in FIG. **15**). The line **312***a* is connected to the voltage source VDD by the transistor **306***a* and a pull-up transistor **316**.

If the state of bit **0** of the expand register **286** is a logical **1**, the transistor **314** is turned on which pulls the line **312** to ground or logical **0**, otherwise it is a logical **1**. Thus the contents of bit **0** of the expand register controls the logic state of the line **312** wherein the logic state of the line **312** is the complement of bit **0** of the expand register **286**. In a similar manner, the logic state of a line **312***b* connected to the transistor switch **306***b* is the complement of the value of bit **1** of the expand register **286**.

Also the logic state of a pair of lines **318***a* and **318***b* are the complements of the bits **2** and **3**, respectively, of expand register **286**. The lines **318***a* and **318***b* are connected to the transistor switches **310***a* and **310***b*, respectively.

If the input of the inverter **304** (either bit **0** or bit **4** of data bus **66***a*, depending upon flip-flop **280**) is a logical **0**, the transistors **306***a* and **306***b* are turned on, which selects the lines **312***a* and **312***b* which contain the complemented values of bits **0** and **1** of the expand register. On the other hand, if the input of the inverter **304** is a **1**, the transistors **310***a* and *b* are turned on which selects the lines **318***a* and **318***b* containing the complemented values of the bits **2** and **3**. The transistors **306***a* and **310***a* are connected to a common output line referred to as expand data bit **0** or EDB0. Similarly, the transistors **306***b* and **310***b* are connected to output line EDB1; thus a bit from the multiplexer **280** at inverter **304** is expanded into the logic states of lines ED0 and ED1, or simply bits ED0 and ED1. A 0 is expanded into bits ED0 and ED1 which are defined by the complement of bits **0** and **1** of the expand register and a 1 is expanded into bits ED0 and ED1 defined by the complement of bits **2** and **3** of the expand register **386**.

In a similar manner, the remaining bits of the lower half of the data bus **66***a*, (or remaining bits of the upper half if the upper half of the microcycle data bus is selected by the multiplexer **282**) are expanded into the expand data bits ED2 and ED3, ED4 and ED5, and ED6 and ED7 which are also defined by the complement of either bits **0** and **1** or **2** and **3** of the expand register. For example, if the expand register bits **0** and **1** contain the values **1** and **0**, respectively, the expand register bits **2** and **3** contain the values **0** and **0**, respectively, and the half of the microcycler data bus being expanded has the values **0**, **1**, **1** and **0**. These values will be expanded into the pixel values **01**, **00**, **00** and **01**, respectively.

A pixel is generally represented by **2** bits so that a byte of pixel data having 8 pixel data bits or PDB7-PDB0, represents four pixels with the first pixel represented by pixel data bits PDB0 and PDB1, the second pixel by PDB2 and PDB1, etc. The pixel data bit

PDB6 will be referred to as the low bit of the first pixel with PDB7 as the high bit. Similarly, the second pixel has low and high bits PDB4 and PDB5, etc.

The functions shift, rotate, and flop can be thought of as operating on pixels as a whole rather than as individual bits. Accordingly, there is provided a shifter, rotator, and flopper for both of the two bits of data representing pixels. Thus, referring to FIG. **11C**, there are provided shifter circuits **320***a* and *b*, rotator circuits **322***a* and *b*, and flopper circuits **324***a* and *b*, for the low pixel data bits (PDB6, PDB4, PDB2 and PDB0) and the high bits (PDB7, PDB5, PDB3 and PDB1), respectively, of a byte of pixel data.

The expand function, as with all the other functions, may be bypassed. Accordingly, the expand decoder **290** has a 4-bit output line **326***a* for the low pixel data bits connected to inputs of a 2-to-1 multiplexer **328***a* and a four-bit output line **326***b* for the high pixel data bits connected to inputs of a 2-to-1 multiplexer **328***b*. The other four inputs of the multiplexer **328***a* are connected to the low bits (D6, D4, D2 and D0) of the data bus **66***a* by a 4-bit input line **330***a* with the other 4 inputs of the multiplexer **328***b* connected to the high bits D7, D5, D3 and D1 by a line **330***b*.

The output of the function generator register **274** is connected by a 7 bit output line **332** to a latch **334** having a control input line for address bit $\overline{A14}$ connected to the address bus **75** of the CPU. When address bit $\overline{A14}$ is low, the contents of the function generator register are gated through the latch **334**. The output of the latch **334** corresponding to bit **3** of the function generator register is connected to the select inputs of the multiplexers **328***a* and **328***b* by a line **336**. Thus, bit **3** of the function generator register controls the multiplexers **328***a* and **328***b*.

if bit **3** is a **0**, for example, the multiplexer **328***a* will conduct the low bits of pixel data from the expand decoder **290** but if bit **3** is a **1**, the multiplexer **328***a* will conduct the low bits of pixel data from the data bus **66***a*. The multiplexer **328***b* operates in a similar manner for the high bits of pixel data. In this manner, the expand function may be bypassed by placing a 1 in bit **3** of the function generator register.

The output of the multiplexer **328***a* is connected to the inputs of the shifter **320***a* and to the inputs of the rotator **322***a* with the output of the multiplexer **328***b* connected to the inputs of the shifter **320***b* and rotator **322***b*. As noted before, the shift and rotate functions are not performed at the same time. Bits **0** and **1** of the function generator register **274** control the amount of shift, if any, performed by the shifters **320***a* and *b*. The outputs of latch **334** corresponding to the bits **0** and **1** are connected to the shifter **320***a* and **320***b* by a **2** bit line **338**.

Bit **2** of the function generator register controls whether a rotate is performed and its corresponding latch output is connected to rotators **322***a* and **322***b* by a line **340**. The output of the shifter **320***a* and the rotator **322***a* are connected to the inputs of the flopper **324***a* with the output of rotator **322***b* and shifter **320***b* connected to the input of flopper **324***b*. The output of the latch **334** corresponding to bit **6** of the expand register **274** is connected to the floppers **324***a* and *b* by a line **342** and controls whether a flop function is performed.

The function generator register **274** is shown in FIG. **13** to comprise a 7-bit register having 7 inputs connected to the D6-D0 bits of the data bus **66***a*. (The logic design of each bit of the register **274** is also similar to the bit of the latch of the microcycle decoder **212** shown in FIG. **15**). The latch **334** comprises NOR gates **334***a–g* each having an input connected to the address bit line $\overline{A14}$ and an input connected to an output of bits **6–0**, respectively, of the function generator **274**. The function generator register select line **218** is connected by a buffer **385**, and by an inverter **346**, to the function generator register **274**.

The multiplexer **328***b*, rotator **322***b*, shifter **320***b* and flopper **324***b* for the high pixel data bits are constructed and operate in a manner similar to the multiplexer **328***a*, rotator **322***a*, shifter **320***a* and flopper **324***a*, for the low pixel data bits. Therefore, only those modifiers for the low pixel data bits (PDB6, PDB4, PDB2 and PDB0) will be described in detail. The high and low pixel data bits are modified at the same time and reassembled before being written to the display RAM.

The output of the NOR gate **334***d* (corresponding to bit **3** of the function generator register) is connected by line **336** to the select input A of the **4** units **328***a***0**, **328***a***2**, **328***a***4** and **328***a***6** of the multiplexer **328***a*. The line **336** is also connected to the select input B of each multiplexer unit by an inverter **348**.

One such multiplexer unit, **328***a***0**, is shown in greater detail in FIG. **20**. The multiplexer unit **328***a***0** has an input **1A**, connected to the unexpanded MDO bit of the data bus **66***a* and an input **1B**, connected to the bit ED0 of the expand data bus **326***a*. The ED0 input is connected to a D type flip-flop shown generally at **349** having outputs **4** and **5**, by a transistor switch **350** having a gate connected to the line **336** (not shown). The MD0 input is connected to the D flip-flop **348** by a transistor switch **351** whose gate is connnected to the line **336** through the inverter **348** (also not shown). Thus if the line **336** is a logical **1** (which is controlled by bit **3** of the function generator register when the address bit $\overline{A14}$ is a logical **0**), the ED0 bit from the expander is conducted to the D flip-flop. The output of this D flip-flop defines pixel data bit PDB0. The output of the eight flip-flops of the multiplexer **328***a* and *b* for the low and high pixel data bits, respectively, together define PDB7-PDB0. Thus if the line **336** is a logical **1**, the pixel data bits PDB7-PDB0 will be determined by expand bits ED7-ED0. But if the line **336** is a 0, the unexpanded bit from the data bus **66***a* is conducted to the D flip-flop and PDB0 is defined by MD0. In such a manner, bit **3** of the function generator register determines whether the expand function is utilized or whether the pixel data from the microcycle data bus is transferred directly. Each multiplexer unit of multiplexer **328***a* has an output line **352***a–d*, respectively, and carries the low pixel data bits PDB0, PDB2, PDB4 and PDB6, respectively.

The output line of each multiplexer unit is connected to the shifter for the low pixel data bits, indicated generally at **320***a* and the rotator for the low bits, indicated generally at **322***a* in FIG. **13**. The shifter **320***a* comprises a programmed logic array (PLA) **321** having a plurality of input lines selectively coupled to a plurality of output lines **368***a–p* by a plurality of pull-down transistors **350**. The output lines **352***a–d* of the multiplexer **328***a* are four of the PLA input lines.

The shifter **320***a* further comprises a register **354***a* having 4 bits **354***a***0**, **354***a***2**, **354***a***4** and **354***a***6** which are connected to the inputs **356***a–d* of the PLA **321**, respectively, (with bit **354***a***0** shown in greater detail in FIG. **21**.) The register **354***a* stores the 4 low bits of the last pixel data byte from the CPU to be written to the display RAM which may be the previous byte of the sequence of bytes (such as those shown in FIG. **6**) to be

shifted. The register **354***a* is also clocked by the signal $\overline{\text{SHIFT}}$.

The NOR gate **344***a* (corresponding to bit **0** of the function generator register) of the latch **334** is connected by a line **358** to another input of the PLA **321**. The line **358** is also connected to an input **359** by an inverter **360**. NOR gate **344***b* (corresponding to bit **1** of the function generator register) of latch **334** is connected by a line **362** to an input of the PLA, with the line **362** also connected to an input **364** by an inverter **366**. Bits **0** and **1** of the function generator register define the least and most significant bits of the shift amount performed by the shifter **320***a*. Each of the output lines **368***a–p* is connected to the voltage source VDD by one of a plurality of pull-up transistors **370**.

The actual amount of the shift performed by the shifter **320***a* is the complement of the bits contained within bits **0** and **1** of the function generator register since the NOR gates **344***a* and *b* invert the outputs of bits **0** and **1** when the address bit **A14** is low. Thus, if bits **0** and **1** have the value "**11**", this is complemented to the values "**00**" resulting in a shift of 0 pixel positions.

A shift of 1 position shown in FIG. **6** will be explained to illustrate the operation of the shifter **320***a*. If the bits **1** and **0** of the function generator register have the value "**10**", the complement of this is "**01**" indicating a shift of **1** pixel position. Thus, the line **358** will have the logic value of 1 with the line **362** at a logic value **0**. The lines **359** and **364** will, of course, be a logical **0** and **1**, respectively. As seen by the placement of the pull-down transistors **350**, a logical **1** on the line **358** and the line **364** results in all the output lines being pulled down to logical **0** except output lines **368***c*, **368***g*, **368***k* and **368***o* since these lines do not have a pull-down transistor coupled to either the input line **358** or **364**. The output lines **386***c* does have a pull-down transistor **350***a* coupled to the input line **352***b* which carries pixel data bit PDB2 from the multiplexer **328***a*. Thus the logic state of the output line **368***c* is the complement of the logic state of the input line **352***b* (or PDB2) from the output of the multiplexer unit **328***a***2**. The pixel data bit PDB0 output of the shifter corresponds to output lines **368***a–d* and the particular value of PDB0 depends upon which of the lines **368***a–d* are selected by the input lines **358** and **362**. Here, output line **368***c* was selected, therefore the pixel data bit PDB0 output of the shifter is defined by the PDB2 output of the multiplexer (but complemented). Since PDB0 is the low bit of the two bits representing the first pixel of a byte of pixel data and PDB2 is the low bit of the two bits representing the second pixel, it is seen that the pixel data values outputted by the multiplexer have shifted one pixel position.

Output lines **368***e–h* of the shifter correspond to PDB2 with output lines **368***i–l* and **368***m–p* corresponding to PDB4 and PDB6 respectively. The output line **368***g* is coupled by a pull-down transistor **350***b* to the line **352***c* which carries the bit PDB4 from the multiplexer. Thus output line **368***g* (PDB2 of the shifter) has the complement of the logic state of PDB4 from the multiplexer. Output line **368***k* (PDB4) has the complement of the bit PDB6 from the multiplexer.

The output line **368***o* of the shifter corresponding to PDB6 is coupled by a pull-down transistor **350***d* to the output bit **354***a***0** of the register **354***a*. Register **354***a* stores the low pixel data bits of the previous pixel data byte from the CPU to be written to memory. Bit **354***a***0** contains the pixel data bit PDB0 of the previous byte. Thus the logic state of the output line **368***o* (PDB6) is the complement of the bit PDB0 of the previous byte to be written.

Thus, for example, if the output bits PDB6, PDB4, PDB2 and PDB0 of the multiplexer **328***a* are the low bits of the 8 bits representing the pixel values P7, P6, P5 and P4, respectively, of byte **1** of the sequence of bytes to be shifted shown in FIG. **6**, and the output of the register **354***a***0** is the low bit of the 2 bits representing pixel value P0 of the prior byte of the sequence, it is seen that the low pixel data bits PDB6, PDB4, PDB2 and PDB0 of byte **1** (together with the high pixel data bits PDB7, PDB5, PDB3 and PDB1) represent pixel data values P0, P7, P6 and P5, respectively, after a shift operation of 1 pixel position.

It is assumed that the first byte of pixel data of a sequence of bytes to be shifted is the first byte to be written to the display RAM after an output by the CPU to the function generator register. Accordingly, each bit of the register **354***a* has a reset input connected by a line **372** to the function generator register select line **218** such that the register **354***a* is reset to 0 with each output to the function generator register. Thus zeros are shifted into the first byte of a sequence as shown in FIG. **6**. Each sequence is initialized by an output to the function generator register and therefore data should not be sent to the function generator register in the middle of the sequence.

The output pixel data of the shifter are in complemented form (whether shifted or not) and will be recomplemented by the flopper indicated generally at **324***a*. The NOR gate **344***g* has an input connected to the $\overline{\text{A14}}$ address bit and an input connected to bit **6** of the function generator register **274** which determines whether the flop function is performed when $\overline{\text{A14}}$ is low. The output of the NOR gate **344***g* is connected by a line **374** to the gates of four transistor switches **376***a–d*. The logic state of the input line **374** is inverted by an inverter **378** whose output is connected to the gates of transistor switches **380***a–d* of the flopper **324***a*. The output lines **368***a–p* of the shifter **320***a* are the input lines of the flopper **324***a*. The flopper **324***a* also comprises a programmed logic array having output lines **382***a–h* coupled to the input lines **368***a–p* by a plurality of pull-down transistors **384**.

The output lines **382***a* and *b* are connected by the switches **376***a*and **380***a*, respectively, to a buffer **385** having an output line which is the flopper PDB0 output line **377***a*. (A typical buffer **385** logic circuit is shown in FIG. **22**.) Lines **382***c* and *d* are connected by switches **376***b* and **380***b*, respectively, to a buffer **385** having the flopper PDB2 output line **377***b*, with the lines **382***e* and *f* connected by switches **376***c* and **380***c*, respectively, to a buffer **385** having the PDB4 output line **377***C* and the output lines **302***g* and *h* connected by switches **376***d* and **380***d*, respectively, to a buffer **385** having the flopper PDB6 output line **377***d*. The input line **368***c* (containing the complemented output pixel data bit PDB0 of the shifter when set for a shift of 1 pixel position) is coupled to the output line **382***b* by a pull-down transistor **384***a* and to the output line **382***g* by a pull-down transistor **384***b* wherein the logic state of the complemented shifter output bit PDB0 is recomplemented and carried uncomplemented on the flopper output lines **382***b* and **382***g*. A logical **1** state of the input line **374** turns on the transistor switch **376***d* whereby the shifter output bit PDB0 is conducted to the flopper PDB6 output line **377***d*. Thus, the PDB0 output of the shifter **320***a* is flopped to the flopper **324***a* output bit PDB6 when the

input line 374 is a logical 1. On the other hand, if the logic state of line 374 is 0, the output of the inverter 378 is a logical 1 which turns on the transistor switch 380*a* which conducts the shifter PDB0 bit to the flopper PDB0 line 377*a* and is not flopped. Thus when the logic state of the input line 374 is 0, the output of the shifter is not flopped. The other inputs of the flopper 324*a* for the bits PDB2, PDB4 and PDB6 are handled in a similar manner.

As an example, if the byte of pixel data being written to the display RAM represents pixel values P7, P6, P5 and P4 as for the byte of original data of FIG. 6 and the shifter is set for zero shifts so that the shifter does not shift the data, then the PDB6, PDB4, PDB2 and PDB0 output bits of the shifter 320*a* are the low bits of the bits representing pixel values P7, P6, P5 and P4, respectively, (but complemented). When bit 6 of the function generator register is a logical 0, the logic states of the pixel data bits will be recomplemented and flopped so that the PDB6, PDB4, PDB2 and PDB0 output bits of the flopper 324*a* (together with the PDB7, PDB5, PDB3 and PDB1 output bits of the flopper 324*b*) represent the pixel data values P4, P5, P6 and P7 after the flop operation as shown in FIG. 6.

The rotate function is performed on the low pixel data bits by a rotator indicated generally at 322*a* and comprises a programmed logic array 386 having 4 input lines connected to the register 354 PDB0, PDB2, PDB4 and PDB6 output lines 356*a–d* and 12 input lines connected to the 12 outputs of four 3-bit shift registers 388–391. The input of the first bit 388*a* of the shift register 388 is connected to the PDB0 input line 356*a* with the inputs of the first bits 389*a*–391*a* of register 389–391 connected to the PDB2, PDB4 and PDB6 lines 356*b–d*, respectively. (A typical bit circuit 388*a* of the bits of the shift registers 388–391 is shown in greater detail in FIG. 23.)

The rotator is used to rotate a four-by-four pixel image 90° in a clockwise direction. The four-by-four pixel image represented in FIG. 7A is shown with the individual pixel data bits PDB0–PDB7 of each of the four data bytes labeled. The rotator is initialized by an output to the function generator register and will reinitialize itself after every 8 writes to the display RAM. To perform a rotation, the following procedure is performed. The top byte or byte 0 of the unrotated image is written to a location in the display RAM. The next byte, byte 1 is written to the first location plus 40, byte 2 to the first location plus 80, and the last byte, byte 3 to the first location plus 120. These four locations correspond to 16 contiguous pixels since 40 bytes represent one line of pixels on the display screen. The process is then repeated with byte 0 rewritten to the first location, byte 1 to the first location plus 40, byte 2 to the first location plus 80 and byte 3 to the first location plus 120. After these 8 writes, the data will appear in the display RAM and (subsequently) the image on the screen rotated 90° from the original as shown in FIG. 7B.

The low 4-bit rotator 322*a* further comprises a 3-bit counter 394 for counting the 8 writes completed in a rotate sequence. (The logic circuitry of the bits 0–3 is shown in greater detail in FIG. 24 with bit 3 excluding that portion shown in phantom.) The counter 394 has a "clear" input, 2, connected to the function generator register select line 218 so that the counter is initialized to 0 with each output to the function generator register 274. A NOR gate 400 having a "$\overline{\text{DATEN}}$" control signal input and an address bit $\overline{\text{A14}}$ input is connected by series connected inverters 396 and 398 to the toggle input of the counter 394. The $\overline{\text{DATEN}}$ control signal is generated by a memory control circuit (FIG. 11F) of the data chip and is activated during memory write cycles. The NOR gate 400 has the input connected to the address bit A14 so that the counter is toggled only during memory write cycles in which the data written is to be modified by the function generator.

The output of the third bit (bit 2) of the counter 394 is connected to the input of a NOR gate 402 which also has an input connected to the output of the inverter 396. The output signal of NOR gate 402, $\overline{\text{SHIFT}}$ is connected to the shift inputs of the shift registers 388–391 and clock inputs of register 354 (as well as flip-flop 280 of the expander). During the first four memory writes of a rotate sequence, the third bit of the counter 394 is 0 (since the counter counts from 000 to 011) therefore, the NOR gate 402 performs as an inverter wherein the $\overline{\text{DATEN}}$ signal from the inverter 396 generates a shift signal at the output of the NOR gate 402 with each of the first four writes to the display RAM of a rotate sequence. With the next or fifth write, however, the third bit of the counter 394 goes to a logical 1 which drives the output of the inverter 402 low for the last four memory writes of a rotate sequence. The $\overline{\text{SHIFT}}$ clock signal is activated with each write to the display RAM (except for the last four writes of a rotate operation) whether or not the rotate function is utilized in a write of data to the display RAM. Thus the $\overline{\text{SHIFT}}$ signal is also used to clock the Expand flip-flop 280 so that the flip-flop 280 toggles with each write operation to the display RAM.

Each low bit of the first three bytes of a rotate sequence are shifted into the shift registers 388–391 of the low bit rotator 322*a*. Shift register 388 stores the pixel data bit PDB0 of pixels P0, P4 and P8 of the first three bytes, respectively, of the rotate sequence of FIG. 7A. Similarly, shift register 389 contains the low pixel data bit PDB2 of pixels P1, P5 and P9 after the first four memory writes of the rotate operation. The particular pixel data bits for each of the registers 388–391 are shown in FIG. 40.

The programmed logic array 386 of the rotator 322*a* further has inputs 404*a*–404*c* connected to the outputs of bits 388*a*–388*c*, respectively, of the shift register 388. The output of bits 389*a–c* of the shift register 389 are connected to the input lines 406*a–c* with the output of bits 390*a–c* and 391*a–c* of the shift registers 390 and 391 connected to the input lines 408*a–c* and 410*a–c*, respectively. The input lines 356*a–d* from the register 354 are coupled to output lines 412*a–d*, respectively, by four pull-down transistors 414. The output lines 412*a–d* are connected by four transistor switches 416*a–d* to the voltage source VDD by a pull-up transistor 418 and also to a common output line 420 which carries the pixel data bit PDB6 output of the rotator in complemented form.

The input lines 404*a*, 406*a*, 408*a* and 410*a* (from the LSB of the shift registers 388–391) are coupled to output lines 422*a–d*, respectively, by four pull-down transistors 424. The output lines 422*a–d* are connected by four transistors switches 426*a–d*, respectively, to a common output line 428 and to voltage source VDD by a pull-up transistor 430. The output line 428 carries the pixel data bit PDB4 output of the rotator in complemented form. The input lines 404*b*, 406*b*, 408*b* and 410*b* and input lines 404*c*, 406*c*, 408*c* and 410*c* are coupled to output lines 432*a–d* and output lines 434*a–d*, respec-

tively, by pull-down transistors **436** and **438** respectively.

The output lines **432***a–d* are connected by four transistor switches **440***a–d* to a common output line **422** (for pixel data output bit PDB2) and to the voltage VDD by a pull-up transistor **444**. The output lines **434***a–d* are connected by four transistor switches **446***a–d* to a common output line **448** (for pixel data output bit PDB0) and to voltage source VDD by a pull-up transistor **450**.

The rotator **322***a* has a second programmed logic array **452** having four output lines **454–457** which controls the transistor switches **416**, **426**, **440** and **446**. The output line **457** is connected to the gates of the transistor switches **416***a*, **426***a*, **440***a*, and **446***a* with the output line **456** connected to the gates of the transistor switches **416***b*, **426***b*, **440***b* and **446***b*, etc.

The program logic array **452** has an input line **460** connected to the output $\overline{Q}$ of the third bit of the counter **394**. The input line **460** is coupled to each of the output lines **454–457** by four pull-down transistors **462**. Thus, when the third bit of the counter **394** is a logical **0** (i.e., during the first four writes to the display RAM of the rotate sequence) the output $\overline{Q}$ of the third bit is a logical **1** which pulls down the four output lines **454–457** of the PLA **452** which turns off the transistor switches **416***a–d*, **422***a–d*, etc. These switches are turned off since during the first four writes, the four shift registers **388–391** are being loaded with the proper pixel data bits of the first four writes. The PLA **452** has an input line **463** connected by an inverter **464** to the output of the NOR gate **344***c* of the latch **344**. The input line **463** is coupled to the output lines **454–457** by four pull-down transistors **466**, respectively. If bit **3** of the function generator register **274** is a logical **1**, the logic state at the input line **463** will also be a logical **1** which pulls down the output lines **454–457** to a logical **0** turning off the transistor switches **416***a–d*, **426***a–d*, etc. of the programmed logic array **386**. The rotate function may be bypassed in this manner.

The PLA **452** has inputs **468** and **470** connected to the Q outputs first and second bits, respectively, of the three-bit counter **394**. The input line **468** is connected to a second input line **469** by an inverter **472**. The input line **470** is connected to still another input line **471** by an inverter **474**. The input lines **468–471** are coupled to the output lines **454–457** by a plurality of pull-down transistors **476** such that as the counter **394** counts from **4** (**100** Binary or B) to **7** (**111** B) the output lines **454–457** are successively activated. Thus, when bits **1** and **2** of counter **394** are both **0**, the output line **454** is enabled and with bits **1** and **0** equal to **01**, respectively, output line **455** is enabled, etc.

As noted before, during the first writes of the rotate sequence, the shift registers **388–391** are loaded with their respective bits of the first three bytes of the rotate sequence of data with the last byte being stored in register **384**. This corresponds to counts **0–3** of the counter **394**. For counts **4–7** data is no longer shifted into the registers while the CPU re-transmits the four pixel data bytes of the sequence to be rotated. At count (**100** B) in which byte **0** is transmitted, the output line **454** is enabled which turns on the transistor switches **416***d*, **426***d*, **440***d* and **446***d*.

Since output line **412***d* is coupled to input line **456***d* from register **384**, pixel data bit PDB6 of the previous (at last) data byte of the sequence (i.e., byte **3**), appears on the output line **420** (PDB6) of the rotator in complemented form. The pixel data bit PDB6 of byte **3** of the sequence is the lower bit of the pixel value represented by **P15**. The lower pixel data bit representing the pixel data value **P11** stored in the **391***a* bit of the shift register **391** connected by the input line **410***a* is complemented by a pull-down transistor **424** and conducted by the transistor switch **426***d* to the PDB4 output line **428** of the rotator **322***a*. In a similar manner, the low pixel data bits representing pixel data values P7 and P3 stored in the shift register **391** appear on the rotator **322***a* pixel data outputs PDB2 and PDB0, respectively, since the transistor switches **440***d* and **446***d*, respectively, are turned on. Thus, although the CPU transmits byte **0** at count **100** B, the byte representing pixel data values **P15**, **P11**, **P7** and **P3** is actually written to the display RAM at the first location as shown in FIG. 7B.

On the next write to the display RAM, the count of the counter **394** changes to **101** B wherein the PLA **452** in turn causes the transistor switches **416***b*, **426***b*, **440***b*, and **446***b* to turn on. The low pixel data bit representing pixel data value **P14** carried by input line **356***c* from the register **354** appears in complemented form on the rotator **322***a* output PDB6 line **420**. Also, the low pixel data bits representing pixel data values **P10**, **P6** and **P2** stored in the register **390** appear in complemented form on the rotator **322***a* PDB4, PDB2 and PDB0 output lines **428**, **442** and **448**, respectively, and are stored in the first memory location plus **40**, as indicated in FIG. 7B. After the last two writes, the low pixel data bits (as well as the high pizel data bits from the rotator **322***d*) representing the pixel data values will appear in the display RAM as shown in FIG. 7B. The flopper **324***a* recomplements the pixel data bits from the rotator **322***a* so that the pixel data bits are stored in uncomplemented form in the display RAM.

Thus, the pixel data that will be written to the display RAM is transmitted by the CPU in the first four "writes" to the display RAM of the four bytes of the rotate sequence and is latched up in the registers **388–391** and **354**. The rotate sequence is then re-transmitted (but any data could actually be sent) to the same four addresses of the display RAM with the pixel data latched up in the registers **354** and **388–391** actually being written to those four display RAM addresses represented in FIG. 7B. The rotator, shifter and flopper circuits for the high pixel data bits (PDB7, PDB5, PDB3 and PDB1) are indicated generally at **322***b*, **320***b* and **324***b*, respectively, in FIG. **13**. The modifications to the high pixel data bits PDB7, PDB5, PDB3 and PDB1 are performed by the rotator **322***b*, the shifter **320***b* and the flopper **324***b* simultaneously with the modifications performed on the low pixel data bits. Each pixel data value, represented by a high and a low pixel data bit, can be shifted, flopped, or rotated as shown in FIGS. **6** and **7***a* and *b*.

The OR and exclusive-OR functions are performed by an OR/exclusive-OR circuit **480** shown in FIG. **11C** to have a four bit input line **482***a* connected to the output of the low pixel data bit flopper **324***a* and a four bit input line **482***b* connected to the output of the high pixel data bit flopper **324***b*. The OR/exclusive-OR circuit **480** has two further inputs connected by a two-bit input line **484** to the latch **334** which latches the complement of bits **4** and **5** of the function generator register **274** when the address bit $\overline{A14}$ is low. These bits determine whether or not the OR or exclusive-OR functions, respectively, are performed.

These functions can be thought of as operating on a byte of pixel data as 8 bits rather than as 4 pixels. When

the OR function is used in writing data to the display RAM, the input to the OR/exclusive-OR circuit is ORed with the contents of the display RAM location being accessed by the addressed chip. Accordingly, the OR/exclusive-OR circuit **480** has **8** inputs connected by an 8-bit input line **486** to a tri-state buffer **488** which is connected to an 8-bit memory data bus **490** from the display RAM which carries the memory data bits MDO–MD7.

Pixel data that was stored in the display RAM which is to be used in an OR or exclusive-OR operation, is latched up in the OR/exclusive-OR circuit **480**. The OR/exclusive-OR circuit **480** has an 8bit output line **492** connected to the tri-state buffer **488** on which the resultant pixel data is carried to be stored at the display RAM location from which the pixel data was accessed.

The OR/exclusive-OR circuit **480** is shown in greater detail in FIG. **13** and comprises **8** units **480***a–h*. Each OR/exclusive-OR unit can perform an OR or exclusive-OR (as determined by bits **4** and **5** of the function generator register **274**) on a pixel data bit from the flopper and from the display RAM and can store the resultant pixel data bit in the display RAM.

A typical unit **480***a* is shown in greater detail in FIG. **25**. The unit **480***a* has an input connected to the output line **377***a* (which is one of the input lines **482***a* in FIG. **11C**) which carries the pixel data bit PDB0 output of the flopper **324***a* and an input **486***a* which carries the pixel data bit PDB0 from the display RAM. The unit has an input **484***a* connected to the output of the NOR gate **344***e* of the latch **334** associated with bit **4** of the function generator register **274**. Bit **4** determines whether or not the OR function is performed. The input line **484***a* is also connected to an inverter (not shown) having an output connected to an input **494**. The unit has an input **484***b* connected to the output of the NOR gate **344***f* associated with bit **5** of the expand register which controls whether or not the exclusive-OR function is performed. The input line **384***b* is also connected to an input line **496** by an inverter **498**.

The input line **377***a* (the PDB0 bit from the flopper) is connected by an inverter **500** which is connected to a line **502**. The input line **486***a* (for the PDB0 bit from the display RAM) is connected to a latch indicated generally at **504** which latches up the pixel data bit from the display RAM until the pixel data bit from the flopper arrives for the OR or exclusive-OR function. The latch **504** has an output line **506** which is connected to a line **508** by an inverter **510**.

The unit **480***a* further comprises a programmed logic array indicated generally at **512** which performs either the OR function or exclusive-OR function (or neither) as determined by bits **4** and **5** of the function generator register. The PLA **512** has output lines **514***a–e* selectively coupled by a plurality of pull-down transistors **516** to the lines **500**, **502**, **508**, **377***a*, **494***a*, **494**, **484***b*, and **496**. The lines **514***a–e* are connected to a NOR gate **516** having an output connected to an inverter **518** which has an output **492***a* (of lines **492** FIG. **11C**).

To illustrate the operation of the unit **480***a*, it will be assumed that bits **4** and **5** of the function generator register have the values **0** and **1**, respectively, which indicates an OR function is to be performed. When bit **4** is a logical **0**, line **484***a* is a logical **1** which pulls-down the lines **514***a*, **514***b* and **514***d* to a logical **0**. The PDB0 bit from the flopper carried on the line **377***a* is inverted by the inverter **500** and recomplemented by the pull-down transistor **516***a* so that line **514***c* carries the PDB0 bit from the flopper in the uncomplemented form. The PDB0 bit from the display RAM is complemented by the inverter **510** and recomplemented by the pull-down transistor **516***b* so that the line **514***e* carries the PDB0 bit from the display RAM in the uncomplemented form. Thus, if either the line **514***c* or line **514***e* is a logical **1**, the output of the NOR gate **516** will be a logical **0** which is inverted by the inverter **518** to a logical **1** on line **492***a*. However, if both the lines **514***c* and *e* are logical **0**, the output of the NOR gate **516** is a logical **1** and the output of the inverter **518** is a logical **0**. Thus, the logical OR function is performed on the PDB0 bits from the display RAM and from the CPU transmitted through the flopper.

To perform an exclusive-OR function, bits **4** and **5** of the function generator register are set to **1** and **0**, respectively. The input line **494** then is a logical **1** which pulls the lines **514***c* and **514***e* to a logical **0**. Also, the line **484***b* is a logical **1** which pulls the line **514***d* in addition to a logical **0**. The line **377***a* which carries the PDB0 bit from the CPU (transmitted through the flopper **324***a*) is coupled to the line **514***b* by a pull-down transistor **516***c*. The line **508** which carries the complemented PDB0 bit from the display RAM is coupled to the line **514***b* by a pull-down transistor **516***d*. Thus, if the PDB0 bit from the CPU is a logical **0** and the complemented PDB0 bit from the display RAM is a logical **0** (i.e., the PDB0 bit from the display RAM is a logical **1**) the logic state of the line **514***b* will be a logical **1** resulting in the output of the NOR gate **516** being a logical **0** and the output line **492***a* of the OR/exclusive-OR unit **480***a* being a logical **1**. Otherwise, the logic state of the **514***b* line is a logical **0** and the logic state of the output line **492***a* depends upon the logic state of the line **514***a*.

The line **502** which carries the complemented PDB0 bit from the CPU is coupled to the line **514***a* by a pull-down transistor **516***e*. The line **506** which carries the PDB0 bit from the display RAM is coupled to the line **514***a* by a pull-down transistor **516***f*. Thus, if the complemented PDB0 bit from the CPU is a logical **0** (i.e., the PDB0 bit from the CPU is a logical **1**) and the PDB0 bit from the display RAM is a logical **0**, the logic state of the line **514***a* will be a logical **1** causing the output of the NOR gate **516** to be a logical **0** and the output of the OR/exclusive-OR unit **480***a* at the output line **492***a* to be a logical **1**.

If both the PDB0 bit from the display RAM and from the CPU are both **0** or alternatively are both **1**, the logic state of both lines **514***a* and *b* will be a logical **0** causing the output of the NOR gate **516** to be a logical **1** and the output line **492***a* of the OR/exclusive-Or unit **480***a* to be a logical **0**. Thus, the exclusive-OR function may be performed on th PDB0 bits from the display RAM and the CPU.

In a similar manner, a logical OR or exclusive-OR function can be performed on the PDB1–PDB7 bits from the CPU and the display RAM by the units **480***b–h* shown in FIG. **13**. The output line **492** of each OR/exclusive-OR unit **480***a–h* is connected to the tri-state buffer indicated generally at **488** which is in turn connected to the memory data bus **490**. The tri-state buffer **488** has **8** units **488***a–h*.

A typical tri-state buffer unit **488***a* is shown in greater detail in FIG. **26**. The unit **488***a* has an input/output line **522** connected to the MD0 bit of the memory data bus **490**. The tri-state buffer unit **488***a* also has an output line **524**, and an input line **526** connected to the $\overline{\text{DATEN}}$ control signal. When the $\overline{\text{DATEN}}$ control signal is low,

the logic state of the output line **522** is the same as the data bit carried on the input line **492***a* from the OR/exclusive-OR unit **480***a*. In this manner, the pixel data outputted from the OR/exclusive-OR unit may be transmitted to the display RAM at an address supplied through the address chip.

The CPU may read an intercept register **528** (FIG. **11**C) having address **8**H to determine if an intercept occurred during a write to the display RAM in which the OR or exclusive-OR function is utilized. An "intercept" is defined as the writing of a non-zero pixel data value at a location in the display RAM that previously contained a non-zero pixel data value. The intercept register **528** has an input connected to the 4-bit output line **482***b* of the flopper **324***b* and an input connected to the 4 bit output line **482***a* of the flopper **324***a* by which the pixel data bits from the CPU may be inputted. The intercept register **528** also has an 8-bit input line **530** connected to the OR/exclusive-OR circuit **480** by an 8-bit line **530**. The output of the intercept register **528** is connected by an 8-bit output line **532** to the input of a 2-to-1 multiplexer **534**.

The intercept register **528**, shown in greater detail in FIG. **13**, comprises 8 units **528***a–h*. A **1** in a particular intercept register unit means that an intercept has occurred. Since a pixel is represented by 2 bits of data, a byte of pixel data represents 4 pixels and thus has 4 pixel positions. Intercept register units **528***a–d* indicate whether an intercept has occured in any of the 4 pixel positions in the last write to the display RAM in which the OR or exclusive-OR functions were utilized. The unit **528***a* indicates whether an intercept has occurred in the first pixel position with the unit **528***b* indicating whether an intercept has occurred in a second pixel position, etc.

The unit **528***a*, typical of the units **528***a–d*, is shown in greater detail in FIG. **27**. The unit **528***a* comprises a NOR gate **536** having an input **538** (connected to one of the lines **482***a*, FIG. **11**C) for the PDB0 pixel data bit and an input **540** (connected to one of the lines **482***b*, FIG. **11**C) for the PDB1 pixel data bit from the CPU. PDB0 and PDB1 represent a pixel that is being ORed or exclusive-ORed with pixel data contained in the display RAM. The unit **528***a* further comprises a NOR gate **542** having an input **530***a* for the PDB0 bit from the display RAM latched up in the unit **480***a* of the OR/exclusive-OR circuit **480** and an input **530***b* for the PDB1 pixel data bit from the display RAM latched in the unit **480***b* of the OR/exclusive-OR circuit.

The output of the NOR gate **536** and the NOR gate **542** are connected to a NOR gate **548** having an output line **550**. Line **550** is connected by a transistor switch **552** to an inverter **554** having an output line **556**.

If the pixel transmitted from the CUP via the flopper **524***a* and *b* and represented by pixel data bits PDB0 and PDB1 is a non-zero pixel, that is, the logic state of the lines **538** or **540** is a logical **1**, then the output of the NOR gate **536** is a logical **0**. Similarly, if the pixel from the display memory latched up in the OR/exclusive-OR unit is a non-zero pixel, the output of the NOR gate **542** is a logical **0**. If the output of both NOR gates **536** and **542** is a logical **0** (i.e., an intercept has occurred in the OR or exclusive-OR operation) the output of the NOR gate **538** is a logical **1** at the line **550**. The other intercept register units **528***b–d* operate in a similar manner to indicate whether an intercept has occurred in the other 3 pixel positions.

The intercept register units **528***e–h* give the intercept information for all OR and exclusive-OR writes since the last read or input from the intercept register **528** by the CPU. An input from the intercept register resets the outputs of these units. Thus, each of the **4** intercept register units **528***e–h* is set to **1** if an intercept occurs in the corresponding pixel position and will not be reset until the next intercept register input.

The unit **528***e*, typical of the units **528***e–h*, is shown in FIG. **28** to have an input **558** which is connected to the output **550** of the unit **528***a*. The input **558** is connected to the input of an AND gate **560** which has another input **562** for a clock signal. The output of the AND gate **560** is connected to the input "S" of an SR flip-flop indicated generally at **564** and having an output line **566** (which is one of the lines **532** of FIG. **11**C). The SR flip-flop **564** has a reset input "R" line **568** connected to input **2**.

If an intercept occurs in the first pixel position, the input line **558** will assume a logical **1** state since it is connected to the output of the intercept register unit **528***a*. When the clock signal on line **562** is a logical **1** the flip-flop **564** will be set. The flip-flop will remain set even though subsequent OR or exclusive-OR operations do not result in an intercept in the first pixel position. The unit **528***e* will remain set until the flip-flop is reset when the data is input from the intercept register **528**. The intercept register select line **222** is connected to a delay indicated at **569** (FIG. **13**) whose output is connected to the reset input '**2**' of each unit **528***e–h*.

Referring back to FIG. **11**C, the output of the intercept register **528** is connected by the 8-bit output line **532** to the multiplexer **534**. The 8-bit line **532** comprises the output lines **556** from the intercept register units **528***a–d* and the output lines **566** from the intercept register units **528***e–h* (FIG. **13**). The multiplexer **534** has a select input connected to the select line **222** from the address decoder **214** (FIG. **11**B) so that when the line **222** is enabled (corresponding to address **8**H) the input lines from the intercept register **528** are selected. The multiplexer further has inputs connected to outputs of the OR/exclusive-OR circuit **480** by an 8 bit line **570**. The OR/exclusive-OR circuit latches up data as it is read from the display RAM which may be data other than pixel data for OR or exclusive-OR operations such as instructions to be executed from the display RAM which are to be transmitted to the CPU.

The output of the multiplexer **534** is connected to the tri-state buffer **273**. [As seen in FIG. **25**, the line **570***a* of the input line **570** (FIG. **11**C) is connected to the line **506** of each unit of the OR/exclusive-OR unit by the inverter **510**].

The multiplexer **534** is shown to comprise 8 units **534***a–h* in FIG. **13**. Each unit selects either a bit of data from the intercept register **528** or a bit of data from the display RAM latched up in the OR/exclusive-OR circuit **480** depending upon the logic state of input select signals.

A typical multiplexer unit **534***a* is shown in FIG. **29** to comprise an AND gate **572** having an input **532***a* (one of the 8 bit input lines indicated as **532** in FIG. **11**C) connected to the complemented output of the intercept register unit **528***a* at line **556** (FIG. **27**) and a select input **576** connected to the intercept registers select line **222**. An AND gate **578** has an input **570***a* (which is one of the output lines indicated as **570** in FIG. **11**C) connecting the complemented latch output of exclusive-OR unit **480***h* and a select input **582**. The outputs of the AND

gate **572** and **578** are connected to a NOR gate **584** having an output line **588***a* which is the output line of the unit **534***a* (and is one of the 8 lines indicated at **588** in FIG. **11**C connecting the multiplexer **534** to the tri-state buffer **273**).

If the select line **582** is a logical **0**, then the output of the AND gate **578** is a logical **0**. And, if the intercept register select line **222** is a logical **1**, then the input line **576** is also logical **1** and the output of the AND gate **572** will be the same as the logic state of the input line **532***a* carrying the complemented data bit from the intercept register. The NOR gate **584** will then recomplement the data. Since the data from the intercept register is in complemented form, the data appearing on the output line **558** will be uncomplemented. Conversely, if the intercept register select line **221** is a logical **0** and the select input **582** is a logical **1**, then the complemented data from the display RAM latched up in the OR/exclusive-OR circuit **480** will appear in uncomplemented form on the output line **588**. The data on the output line **588** will be transmitted to the CPU via the microcycle data bus **66**.

The select line **582** is shown in FIG. **13** to be connected to a line **583** which carries the select signal MENB1 which is generated by the logic elements indicated generally at **585**. The inputs to the elements **585** include the CPU control signal $\overline{M1}$.

The Z-80 CPU requires instruction data to arrive in an $\overline{M1}$ cycle (instruction fetch) at a different time than data during non-$\overline{M1}$ cycles. The data latched up in the OR/exclusive-OR circuit may be instructions that were stored in a scratchpad portion of the display RAM. The elements **585** which generate MENB1 which loads the instruction onto the microcycle data bus **66** (via the output lines **588** and tri-state buffer **273**), insert a delay so that the instructions arrive at the CPU at the proper time.

It should be noted that non-$\overline{M1}$ cycle data from the RAM may be transferred directly from the memory data bus **490** to the microcycle data bus **66** via tri-state buffer **273** on the clock signal $\overline{ZIP}$. $\overline{ZIP}$ is a function (as is MENB1) of the CPU control signals $\overline{MREQ}$, $\overline{RD}$ and some address bits (so that it can be determined that RAM is being accessed) and is generated by the logic elements indicated generally at **589** and **591** which include a latch **593** (FIG. **13** with each bit of the latch logically similar to that shown in FIG. **15**) for the address bits.

Briefly summarizing the operation of the function generator of the data chip, the CPU can update the pixel data stored in the display RAM by transferring pixel data from the ROMs to the display RAM at address sent to the display RAM via the address chip. However, numerous modifications to this pixel data can be performed by the function generator before the pixel data is stored in the display RAM. Thus, depending upon the data sent to the function generator register **274**, the pixel data may be expanded, shifted or rotated, flopped, and exclusive-ORed ore ORed with the data already stored in the memory location being addressed.

Referring back briefly to FIG. **2**, the display RAM **42** has stored therewithin, pixel data representative of the pixels of a picture displayed on the screen of the TV **28**. Each pixel is represented by two bits of data which select a color register which defines the color and intensity of the associated pixel. An additional function of the video processor **52** is to sequentially read the pixel data stored in the display RAM **42**, decode the pixel data into color and intensity data signals, convert these signals to analog signals, and supply the signals to the RF modulator **58** which converts the signals to a form suitable for the TV set **28**. The address chip **56** sequentially reads the pixel data from the display RAM **42** synchronously with the raster scan of the TV **28** which will be more fully described later.

Each byte of pixel data read is conducted on the memory data bus **490** (FIG. **11**C) to the tri-state buffer **488**. The 8-bit output line **486** of the buffer **488** is connected to an 8-bit line **590** which divides into two 4-bit lines **592***a* and **592***b*. The line **592***a* is connected to a 4-bit shift register **594** with the line **592***b* connected to a 4-bit shift register **595**. The shift register **594** stores the low pixel data bits PDB0, PDB2, PDB4 and PDB6 and shift register **595** stores the high pixel data bits PDB1, PDB3, PDB5 and PDB7, of the 4 pixels represented by a byte of pixel data read from the display RAM. The output of the shift registers **594** and **595** are connected by lines **596***a* and **596***b*, respectively, to the inputs of a multiplexer **598**.

The multiplexer **598** has inputs "SERIAL 1" and "SERIAL 0" and two inputs from a background color register **600**. The multiplexer **598** has **2** select inputs **602** and **604** to output 2 pixel data bits from either the shift registers **594** and **595** or the SERIAL 0 and SERIAL 1 inputs, or the background color register **600**. The multiplexer **598** will operate to select pixel data bits from the background color register **600** when the pixels to be displayed on the display screen are located in the background area indicated at **608** (FIG. **5**) of the display screen. The muliplexer **598** will select the pixel data bits from the shift register **594** and **595** (low resolution mode) when the pixels being displayed are located in the area indicated at **610** of the display screen (FIG. **5**). Pixel data bits SERIAL 1 and SERIAL 0 will be selected for the area **610** when the video processor is operated in the high resolution mode.

The inter-connection of the shift registers **594** and **595** within the data chip is shown in FIG. **13**. Each bit of the shift registers **594***a–d* and **595***a–d* has an input P connected to the tri-state buffer **488** by a buffer indicated at **611**. (The buffers **611** are logically similar to that shown in FIG. **18**.) Also each bit has clock inputs C and $\overline{C}$, a load input L, and input D from the previous register bit (except bits **594***a* and **595***a* which have their D input grounded) and an output Q to the succeeding register bit. The shift register **594** latches up the low pixel data bits of the 4 pixels represented by a byte of pixel data read from the display RAM and the shift register **594***b* latches up the high pixel data bits. Thus, register bits **594***a–d* latch up pixel data bits PDB0, PDB2, PDB4 and PDB6.

The output of the register bit **594***d* is connected by the line **596***a* to the multiplexer **598**. The data stored in the shift register **594** is shifted one bit position upon the activation of the clock signals such that pixel data bit PDB0 is shifted to the register bit **594***b*, pixel data bit PDB2 is shifted to the register bit **594***c*, pixel data bit PDB4 is shifted to the register bit **594***d* and PDB6 is shifted to the multiplexer **598**. The high pixel data bits are loaded and shifted in the shift register **595** at the same time as the low pixel data bits in a similar manner. (A typical shift register bit is shown in greater detail in FIG. **30**.)

The clock signals for the clock inputs C and e,ovs/C/ of the shift registers are PXCLK and e,ovs/PXCLK/ which are the outputs of the buffer shown at **621** in

FIG. 13. The input signal of the buffer 621 is a clock signal PX which is generated by the clock generator in FIG. 11D. PX occurs synchronously with the display of the pixels on the display screen. The generation of the clock signal PX will be described more fully later.

The load signal for loading pixel data into the shift registers 594 and 595 occurs once every four PX pulses since a byte of data from the display RAM represents four pixels. The generation of the load signal will also be more fully described later.

The multiplexer 598 is shown in FIG. 13 to have the input lines 596*a* and *b* from the shift registers 594 and 595, the input lines 608 and 610 for the SERIAL 0 and SERIAL 1 pixel data bits and the input lines 612 and 614 from the background color register 600 selectively coupled by pulldown transistors 616 to transistor switches 618. The output of the transistor switches 618 are selectively coupled to the output lines 620 and 622 by the two buffers 385. (A typical buffer 385 is shown in FIG. 22.) The output lines 620 and 622 carry the pixel data bits "Z" and "Y", respectively, which (together with the left/right bit) select a color register. The gates of the transistor switches 618 are selectively coupled to the outputs of a plurality of logic gates 623. The inputs of the logic elements 623 are selectively coupled to the input line 604 so that when the logic state of the line 604 is a logical 0, the pixel data bits from the background color register are conducted to the output lines 620 and 622. The logic elements 623 are also selectively coupled to the input line 602 from the low/high resolution mode flip-flop 606 (FIG. 13) such that when the logic state of the line 602 is a logical 0 (and the logic state of the input line 604 is a logical 1) the pixel data bits on the input lines 596*a* and *b* from the shift registers are conducted to the output lines 620 and 622. Otherwise, the pixel data bits SERIAL 0 and SERIAL 1 are conducted to the output lines 620 and 622 when the logic state of the input line 602 is a logical 1.

Referring back to FIG. 11C, the background color register 600 is a 2 bit register having inputs connected to the data bus 66*a* by a 2-bit line 624. The 2 bits stored therewithin (together with the left/right bit) identify one of the 8 color registers which determines the color and intensity of the background area indicated as area 608 in FIG. 5. The background color register 600 has the address 9H which activates the register select line 220 by which these 2 bits may be changed. (The circuitry of the storage unit for each bit of the background color registers is logically similar to that shown for the latch in FIG. 15.)

In order to determine when the multiplexer 604 should select the pixel data bits from the background color registers 600, the data chip further comprises a vertical position counter 626 and a horizontal position counter 628 shown in FIG. 11B. The vertical position counter 626 counts the number of lines of pixels as they are displayed in a raster scan. A "HORIZONTAL DRIVE" signal occurs with each line of pixels displayed. A "VERTICAL DRIVE" signal occurs once every field. Both the HORIZONTAL DRIVE and VERTICAL DRIVE signals are generated in another position of the data chip circuitry to be discussed later. The vertical position counter 626 has inputs for the HORIZONTAL DRIVE and VERTICAL DRIVE signals and counts each HORIZONTAL DRIVE signal (corresponding to a line of pixels displayed) and resets with each VERTICAL DRIVE signal. There is further provided a vertical "blank" register 630 having an 8-bit input line 632 connected to the data bus 66*a*. The vertical blank register 630 has address AH and contains the line number at which the background color (indicated by the background color register 600) will be displayed to the bottom of the screen. Through inputting this vertical line number to the vertical blank register 630, the bottom border line 634 (FIG. 5) may be set.

The vertical position counter 626 continues counting even after the raster scan has reset to the top of the screen. Hence the pixels at the top of the screen will continue to be defined by the background register. When the counter 626 reaches 162, it will reset which causes the next line of pixels to be defined by the display RAM and defines the top border of the background area.

The vertical blank register 630 further allows display RAM that would normally be utilized to store pixel data for the area 610 to be used for scratch pad memory. Thus, if the vertical blank register is set to 0, the entire display RAM can be used for scratch pad. In the low resolution embodiment, the register should be set to 101 or less in bits 1–7; in the high resolution system it should be set to 203 or less in bits 0–7.

The line number contained within the vertical blank register 630 is compared to the current line number indicated by the vertical position counter 626 by a "less-than-compare" 634 having inputs connected by lines 636 to the output and complemented output of each bit of the vertical blank register 630 and also has inputs connected to the output and complement of the output of each bit of the vertical position counter 626 by the lines 638. The output of the less-than-compare 634 goes to a logical 0 when the vertical position counter 626 reaches the number contained within the vertical blank register 630. The output of the less-than-compare is connected by a line 640 to a decoder 642. The decoder 642 further has inputs selectively coupled by a line 644 to the output and complemented output of the bits of the horizontal position counter 628.

The horizontal position counter 628 counts the pixel positions of a line as the pixels are being displayed. the horizontal position counter 628 has an input for the clock signal Φ which changes synchronously with the scanning of the pixel positions of the raster scan. The horizontal position counter 628 has an additional input for the HORIZONTAL DRIVE signal and resets utilizing the HORIZONTAL DRIVE signal. The decoder 642 has set and reset lines 646 connected to the inputs of a flip-flop 648. The flip-flop 648 has an output line 604 which is connected to a select input of the multiplexer 598 (FIG. 11C).

The decoder 642 decodes the output from the horizontal position counter 628 such that the flip-flop 648 is set when the horizontal position counter reaches a first number which defines the left margin of the background area. The output of the flip-flop 648 when set, causes the multiplexer 598 to switch from background color register 600 to either the shift register 594 and 595 of the SERIAL 0 to SERIAL 1 inputs. When the horizontal position counter 628 reaches a preset second number (corresponding to a second position in each line of pixels on the display screen and defining the right margin) the decoder 642 resets the flip-flop 648 causing the multiplexer 598 to switch back to the background color register 600 such that the pixels being displayed on the screen are then defined by the background color register 600.

In this manner, the pixel data defining the pixels of each horizontal line may be drawn from first the background color register then from the shift registers which shift data from the display RAM and then back to the background color register as shown in FIG. 5. When the vertical position counter **626** reaches the line number stored in the vertical blank register **636**, the less-than-compare **634** inhibits the decoder **642** from setting the flip-flop **648** for the remaining lines of the frame. Since the flip-flop **648** is not reset, the multiplexer **598** (FIG. 11C) will not switch from the background color register so that the remaining pixels to be displayed will be defined by the pixel data bits stored within the background color register **600**. Since the vertical position counter does not reset until after the top background area has been scanned, these pixels will also be defined by the background register.

FIG. **13** details the interconnection of the vertical position counter **626** within the data chip and shows the counter **626** to comprise a 9 bit counter. (The logic circuitry of the least significant bit **626***a* is shown in FIG. **24**.) Logic circuitry typical of the bits **626***b–h* is similar to that shown in FIG. **24** with the addition of the elements shown in phantom. Logic circuitry typical of the **626***i* is similar to that for bits **626***b–h* excluding the NOR gate **650**.

The vertical blank register **630** is shown in FIG. **13** to comprise an 8-bit register (with the logic circuitry of each bit similar to that shown in FIG. **15**.) The logic circuitry of the less-than-compare **634** is indicated generally at **634** and comprises a plurality of NOR gates **652** and a PLA comprising pull-down transistors **654** and pull-up transistors **656** selectively coupled to the vertical blank register **630**, vertical position counter **626**, and output line **640** connected to the decoder indicated generally as **642**.

The horizontal position counter indicated generally at **628** comprises an 8-bit latch **658***a–h* and a plurality of pull-down transistors **660** and a plurality of pull-up transistors **662**. (The logic circuitry of the least significant bit **658***a* of the binary counter **628** is shown in greater detail in FIG. **31** with the logic circuitry of bit **658***b*, typical bits **658***b–h*, shown in greater detail in FIG. **32**.) The horizontal position counter **628** is connected by 10 output lines indicated generally at **644** to the decoder **642** which comprises a plurality of pull-down transistors **644** and pull-up transistors **666**. The decoder **642** has additional inputs "PX" and Φ2 clock signals. The set and reset output lines **646** are connected to the inputs of the flip-flop indicated generally at **648**. Flip-flop **648** has an output line **604** which is connected to a select input of the multiplexer **598** (FIG. 11C).

The $\overline{Q}$ output of the least significant bit **658***a* of the horizontal position counter **628** is connected to the output of a NOR gate **667** whose output is the load signal for the shift registers **594** adn **595**. The other input of the NOR gate **667** is connected to the clock signal Φ2. Since the counter **28** is clocked by the clock signals Φ1 and Φ2 which have half the frequency of PX, the output of bit **658***a* has one fourth the frequency of PX. Therefore, a load signal will occur for every four PX pulses, or for every four pixels displayed.

The output of 6 bits of the horizontal position counter **628** is shown in FIG. **11B** to be connected by line **668** to the inputs of a "compare" circuit **670**. The other inputs of the compare **670** are connected to the output of a 6 bit horizontal color boundary register **672** by the line **674**. The horizontal color boundary register **672** has inputs connected to the data bus **66***a* by the line **676**. The output of the compare **670** is connected to a flip-flop **678** by a line **680** with the flip-flop **678** having an output **682** which carries the "left/right" bit.

The horizontal color boundary register **672** defines the horizontal position of the imaginery vertical line **64** on the screen **32** of FIG. **5**. As noted before, for pixel positions associated with a byte of pixel data to the left of the boundary, the left/right bit of the four pixels associated with that byte is set to one. The left/right bit is set to zero for pixels to the right of the boundary line **64**. Color registers **0–3** are selected by a left/right bit equal to 0 and registers **4–7** are selected for the pixels to the left of the boundary.

The address sent to the horizontal color boundary register **672** is compared with the current address of the byte of pixel data being displayed as indicated by the horizontal position counter **628**. If the state of the counter **628** is less than the address contained within the register **672**, the pixel locations to be displayed are to the left of the horizontal boundary line and the flip-flop **678** is set such that the left/right bit is a logical **1**, otherwise the pixel locations are to the right and the left/right bit is reset to 0.

The inter-connection of the horizontal color boundary register **672** is shown in FIG. **13** wherein the register comprises a 6-bit register having the address **9H** (the same as the background color register). (A bit of the horizontal color boundary register is logically similar to that shown for the latch in FIG. **15**.)

The "compare" circuit connected to the horizontal color boundary register **672** and horizontal position counters **628** is indicated generally at **670** and comprises 6 exclusive-OR units **684***a–f* (with the logic circuitry of a typical exclusive-OR unit **684***a* shown in greater detail in FIG. **33**.) The output of each exclusive-OR unit is coupled to an output line **686** by a plurality of pull-down transistors indicated generally at **688**. The line **686** is coupled to the voltage source VDD by a pull-up transistor **690** and to the left/right output line **682** by an inverter **692**.

As previously discussed, two pixel bits are used to represent each pixel on the screen. These bits, referred to as Y and Z, may be read from the display RAM or from the background color register. These two bits, along with the left/right bit which is set by crossing the horizontal color boundary, map each pixel to one of the 8 different color registers. The value in the color register then defines the color and intensity of the pixel on the screen associated with the pixel data bits. The intensity of the pixels is defined by the 3 least significant bits of each color register, **000** for darkest and **11** for lightest. The colors are defined by the 5 most significant bits. The color registers have addresses **0-7H**; and register **0** having address **0H**, register **1** having the address **1H**, etc.

Referring back to FIG. **11B**, a serial data decoder **694** decodes the bits Y and Z, and the left/right bit to determine to which of the color registers **224** the bits point. The serial data decoder **694** comprises a gate indicated generally at **696** in FIG. **13** and has the Z input line **620**, the Y input line **622** and the left/right input **682** with the clock signal inputs $7\overline{M}$ and **7M**. The serial data decoder **694** further comprises a PLA **698** having pull-down transistors **700** and pull-up transistors **702**. The PLA **698** has 8 output lines indicated generally at **704** with one each connected to one of the color registers **224**. A particular logic state of the pixel data bits Y, Z, and

left/right activates a particular output line **704** which enables the corresponding color register to output its contents. In this manner, these pixel data bits point to a unique color register.

When a color register is selected or identified, the contents of the color register is outputted to a latch **706** shown in FIG. **11B** which has five output lines **708** connected to a color decoder **710** for the five color bits and 3 outputs connected to serially connected latches **712** and **714** by the line **716**, for the 3 intensity bits. The output of the latch **714** is connected to an intensity decoder **718**.

The intensity decoder **718** has further inputs for the "SYNC" and "BLANK" NTSC standard signals. These signals, together with the 3 intensity bits from the selected color register, determine the analog values of the signal "VIDEO" at output line **720** together with a reference voltage of 2.5 volts at line **722**.

The color decoder **710** further has inputs for the NTSC standard signals "BURST" and "BLANK" which, together with the 5 color bits from the selected color register, determine the analog values of the "R-Y" signal on line **724** and the "B-Y" signal on line **726**.

The 8 color registers, shown in greater detail and indicated at **224***a–h*, each comprise an 8 bit register having register select lines **216***a–h*, respectively, and output enable lines **704***a–h*, respectively. Each color register is connected to the 8-bit data bus **66***a* so that any particular register may be addressed when its corresponding register select line is enabled in order to load the register with the color and intensity data. (A register bit **224***b***0**, typical of the other register bits of the color registers **224** is shown in greater detail in FIG. **34**.)

The Q output of each bit of the color registers is connected to the 8 bit latch indicated generally at **706**. The latch **706** has five outputs connected by a buffer **728** to the color decoder indicated generally at **710**. (The unit **728***a* typical of the five units of the buffer **728** is shown in greater detail in FIG. **35**.)

The color decoder **10** converts the 5 digital bits from a color register into the analog color video signals R-Y and B-Y. The color decoder **710** comprises a PLA **730** (for the R-Y signal) and a PLA **740** (for the B-Y video signal) the outputs of which are coupled to the gates of a plurality of transistor switches **742** and **744**, respectively. The inputs of the switches **742** and **744** are selectively coupled to a plurality of series-connected resistors **746**. The output of the switches **742** are connected to the output line **724** for the R-Y color video signal and the switches **744** are connected to the output line **726** for the B-Y color video signal.

The 3 outputs of the latch **706** for the 3 intensity bits from the color registers **224** are connected to the latch indicated at **712** whose outputs are connected to the latch **714**. The output of the latch **714** is connected to the intensity decoder indicated generally at **718**. The additional latches **712** and **714** provide a timing delay. The intensity decoder **718** decodes the 3 intensity bits from a color register and converts then into the analog intensity signal "VIDEO". The intensity decoder **718** comprises a PLA indicated generally at **748** whose output is coupled to the gates of the plurality of transistor switches **750**. The input of the transistor switches **750** are selectively coupled to the series-connected resistors **752** with the output of these switches **750** connected to the VIDEO signal line **720**. The intensity decoder **718** further supplies a 2.5 reference voltage on the line **722** from the series-connected resistors **752**.

A clock generator **754** shown in FIG. **11D** uses the 7M and $\overline{7M}$ clock signals (7.159090 MHz square waves) to generate ΦG and $\overline{PX}$. These are the clock signals for the system. The frequency of $\overline{PX}$ is half that of 7M and the frequency of ΦG is half that of $\overline{PX}$.

The clock generator **754**, shown in greater detail in FIG. **13**, comprises a divide-by-2 counter indicated generally at **756** having inputs 7M and $\overline{7M}$. The divide-by-2 counter **756** has an output line **758** which carries the clock signal PX. The clock generator **754** further comprises a second divide-by-2 counter indicated generally at **760** which has inputs 7M and $\overline{7M}$ and the input PX from the divide-by-2 counter **756**. The output of the divide-by-2 counter **760**, line **762**, is connected to a buffer indicated generally at **764** which has the output line **766** which carries the clock signal ΦG. The output line **762** is also connected to an inverter and buffer indicated generally at **768** which has the output line **770** for the clock signal Φ1 which is the same as ΦG and the output **772** for the clock signal Φ2 which is the inverse of clock signal ΦG.

The clock generator **754** has an input **774** connected to the output of a third signal generator indicated generally at **776** which has inputs 7M, $\overline{7M}$ and the HORIZONTAL DRIVE signal on the input line **778**. The generator **776** generates a clear signal as a function of the HORIZONTAL DRIVE, 7M and $\overline{7M}$ clock signals which clears the clock generator **764**.

The relationship between 7M, HORIZONTAL DRIVE, ΦG and $\overline{PX}$ is illustrated in FIG. **41**. The frequency of $\overline{PX}$ is half that of 7M and the ΦG clock signal is $\frac{1}{4}$ of 7M. There are 455 cycles of 7M per horizontal line of pixels displayed and **113** and $\frac{3}{4}$ ΦG cycles per horizontal line. Because of the extra $\frac{3}{4}$ cycle, ΦG must be resynchronized at the beginning of each line. This is done by the clear signal generator **776** which "stalls" ΦG for 3 cycles of 7M and is initiated by clock signal HORIZONTAL DRIVE. $\overline{PX}$ is also stalled for the same amount of time.

FIG. **11E** shows a television sync generator **780** which also uses the clock signal 7M and $\overline{7M}$ to generate NTSC, SYNC, BURST and BLANK signals to be sent to the intensity decoder **718** and color decoder **710** (FIG. **11B**). Also generated are the HORIZONTAL and VERTICAL DRIVE signals. The TV sync generator comprises a ΦA and ΦB generator **782** having the 7M and $\overline{7M}$ clock inputs. The generator **782** has output lines **784** and **786** for the ΦA and ΦB clock signals, respectively, connected to a horizontal counter **788**. The counter **788** has output lines **790** connected to input of a vertical counter **792** and outputs **794** connected to the inputs of a decoder **796**. The horizontal counter **788** counts the ΦA and ΦB clock pulses and the decoder **794** decodes the output of the counter **788** to provide a HORIZONTAL BLANK signal on a line **800**, a BURST signal on a line **802** and a HORIZONTAL DRIVE signal on a line **804**. A decoder **806** is connected to the output of the vertical counter **792** and provides a VERTICAL BLANK signal on a line **808**, two signals related to a VERTICAL SYNC signal on lines **810** and **811** connected to inputs of the decoder **796** and a VERTICAL DRIVE signal on a line **812**.

An OR gate **818** has inputs connected to the HORIZONTAL BLANK signal line **800** and to the VERTICAL BLANK signal line **808** and has an output line **820** for the BLANK signal. The decoder **786** decodes the

input lines **810** and **811** as well as the count of the counter **788** to produce the SYNC signal on line **798**.

The SYNC, BLANK and BURST signals are NTSC standard timing signals and are utilized to generate the R-Y, B-Y and VIDEO signals. The HORIZONTAL DRIVE and VERTICAL DRIVE signals are used to synchronize the data chip with the address chip as well as to provide clock signals for the vertical position counter **626** and horizontal position counter **628** (FIG. **11B**). The HORIZONTAL DRIVE signal occurs once every horizontal raster scan line (63.5 microseconds), and VERTICAL DRIVE occurs once every field (16.6 milliseconds).

The ΦA and ΦB generator **782** is shown in FIG. **13** to comprise a counter **822** which is connected to an output buffer (indicated generally at **824**) having output line **826** for the ΦA clock signal and output line **828** for the ΦB output signal, which are 2.045 MHz. (The counter **822** is shown in FIG. **36** to comprise a "divide by 3½" counter having the input clock signal **7M** and $\overline{7M}$.)

The counter **788** has 8 bits, **788***a–h*, and a programmed logic array, or PLA indicated generally at **830**. (The loic circuitry of the counter bits **788***a–g* are logically similar to those shown in FIGS. **31** and **32** for the horizontal position counter **628** with the logic circuitry of the bit **788***h* shown in greater detail in FIG. **37**.) The horizontal counter **788** is a divide-by-130 counter and has a frequency of 63.5 microseconds. The Q and $\overline{Q}$ outputs of the bits **628***a–h* of the counter **788** are connected to the decoder indicated generally at **786** which comprises a programmed logic array **832**. The output of the PLA **832** is selectively coupled to 3 flip-flops **834–836** either directly or by logic elements **838**. (The flip-flop **834** is typical of the flip-flop **834–836** and is shown in greater detail in FIG. **38**.)

The flip-flop **836** has an output line **800** which carries the HORIZONTAL BLANK signal and is connected to the OR gate **818** which comprises a NOR gate **840** and an inverter **842**. An output line **802** of the flip-flop **835** (via a buffer **385**) carries the BURST signal with the output line **798** of the flip-flop **834** (via a buffer **385** carrying the SYNC signal.) An output line **804** of the delay elements **839** from the decoder PLA **786** carries the HORIZONTAL DRIVE signal.

The Q output of the bit **788***b* of the counter **788** is connected to the input **2** of a flip-flop **850** (shown in greater detail in FIG. **39**.) The outputs C and $\overline{C}$ of the flip-flop **850** have a frequency of half that of the horizontal counter **788** and are connected to the clock inputs of the counter **792** having bits **792***a–j*. The counter **792** is a divide-by-512 counter and has a period of 1/30 of a second. (The counter bits **792***b–j* are logically similar to those shown in FIG. **24** with the bit **792***a* also logically similar but excluding those elements shown in phantom.) The Q and $\overline{Q}$ outputs of the bits of the counter **792** are selectively coupled to a programmed logic array indicated generally at **852** of the decoder **806**. An output line **853** of the PLA **852** is connected to a flip-flop **856** (shown in greater detail in FIG. **38**) having an output line **857**. The output line **857** carries the VERTICAL BLANK signal and is connected to an input of the NOR gate **840**. An output line **854** is connected to a shift register bit **858** (shown in greater detail in FIG. **23**). The output of the shift register **858** is connected to a plurality of logic elements **859** having additional clock signal inputs Φ1 and Φ2 and an output line **860** which carries the VERTICAL DRIVE signal. The line **860** is connected by a buffer **862** to the VERTICAL DRIVE pad **864**.

FIG. **42** illustrates the relationship between SYNC, VERTICAL BLANK and VERTICAL DRIVE signals. Each division represents 1 horizontal scan of the raster scan.

FIG. **43** illustrates the relationship between the signals HORIZONTAL DRIVE, HORIZONTAL BLANK, SYNC and color BURST with each horizontal division equal to 3½ cycles of the clock **7M**. The pattern repeats every 455 cycles of **7M**. The shaded area voltages are determined by the pixel data bits from the display RAM. The color BURST signal time occurs when B-Y is at 1.7v and the SYNC signal time occurs when VIDEO is at 0v. The relationship between the HORIZONTAL DRIVE and VERTICAL DRIVE signals is illustrated in FIG. **41**.

In memory write cycles, in which data is written to the display RAM, a control signal WRCTL (generated by the address chip) is activated and a memory control circuit **882** (FIG. **11F**) of the data chip generates the $\overline{DATEN}$ control signal. The function generator (FIG. **11C**) takes the data from the CPU from the microcycle data bus **66** and transfers it to the memory data bus in conjunction with the $\overline{DATEN}$ control signal. Of course, if the data is to be modified, the function generator will modify the data as required as it places the data on the memory data bus. The memory control circuit **882** has an additional input for another address chip generated control signal LTCHDO and an output line **884** at which the memory control circuit **882** outputs a second control signal which is a function of the LTCHDO control signal. The relationship between the data chip control signal $\overline{DATEN}$ and the address chip control signal $\overline{WRCTL}$ is shown for two memory write operations in FIGS. **1A** and D.

The memory control circuit is shown in greater detail in FIG. **13** and is indicated generally at **882**. The memory control circuit has an input line **886** for the $\overline{WRCTL}$ control signal which is connected by a plurality of logic elements **889** to a flip-flop **890** having an output line **892** which carries the $\overline{DATEN}$ control signal. The logic elements **888** include the transistor switch **889** which has a clock signal line **891** connected to the gate of the switch **889**. The clock signal on the line **891** is a function of the clock signals Φ1, PX and $\overline{PX}$. The output line **892** (which carries the $\overline{DATEN}$ control signal is connected to a $\overline{DATEN}$ pad **896** by a buffer **385** and a buffer **894**. The buffer **385** also has an output line **898** which also carries the $\overline{DATEN}$ control signal.

The memory control signal **882** further has an input line **900** for the LTCHDO control signal from the address chip. Line **900** is connected by a resistor and an inverter **902** to a NOR gate **904** having an additional input connected to the control signal line **891** and an input connected to the control signal Φ2. The output of the NOR gate **904** is connected by a buffer **385** to an output line **884**. The LTCHDO control signal from the address chip indicates to the data chip when valid data from the display RAM is present on the memory data bus. The OR/exclusive-OR circuit **480** (FIG. **13**) utilizes the control signal on the output **884** which is a function of the control signal LTCHDO to latchup data from the memory data bus which is utilized in the OR and exclusive-OR operations.

Referring now to FIG. **13**, the data chip generates two further control signals, INPUT on a line **908** and OUTPUT on a line **910**. These control signals are gen-

erated by the logic elements indicated generally at **912** which have an input line **914** for the $\overline{IORQ}$ CPU control signal, an input line **916** which carries the CPU control signal **M1**, and an input line **918** which carries the CPU control signal RD. The signals INPUT and OUTPUT indicate when an input or output operation is requested by the CPU and have a duration which is longer than that of the CPU control signals to compensate for delay due to the microcycler.

ADDRESS CHIP

The address chip **56** of the video processor **52** is shown in FIG. **10** to have inputs MXD0–MXD7 from the microcycle data bus **66** with memory address outputs MA0–MA7 connected to a latch **950** whose output is connected to the display RAM address bus **952**. The address chip relays addresses transmitted by the CPU whereby the CPU may selectively read the contents of the display RAM, sequentially generates addresses for reading the display RAM synchronously with the display of pixels on the screen represented in the display RAM and handling and generating interrupts.

The address chip further has clock inputs ϕ and ϕ from the buffer **100**, CPU control signal inputs $\overline{M1}$, $\overline{RD}$, $\overline{IORQ}$, $\overline{MREQ}$0 and $\overline{RFSH}$ and CPU control signal outputs $\overline{INT}$ and $\overline{WAIT}$ from and to, respectively, the CPU. Outputs carrying the address chip generated signals LTCHDO and $\overline{WRCTL}$ are connected to the corresponding inputs of the data chip **54** with inputs connected to the data chip outputs VERT. Dr. and HOR. DR. The address chip address bit has inputs A12–A14 connected to the CPU address bus **73**, input $\overline{LIGHTEN}$/ from the light pen **62** (FIG. **2**). Finally, the TEST VDD, VGG and VSS are connected to +5v, +5v, +10v, and ground with the row address strobe signal RASO connected to an input of the logic elements indicated generally at **954** which generate the write enable ($\overline{WE}$), column address strobe ($\overline{CAS}$), chip select ($\overline{CS}$) and row address strobe (RAS) signals.

The address chip **56** of the video processor **52** is shown in a block diagram in FIG. **44**. The address chip **56** has a microcycle decoder **1000** which selects 12 bits of address from the data from 8-bit data bus **66***b* connected to the microcycle data bus **66** by a buffer **1001**. The microcycle decoder **1000** is similar to the microcycle decoder **212** of the data chip and need not be discussed in detail.

A detailed circuit implementing the block diagram of the address chip is shown in FIGS. **45**A–J with a composite diagram of FIGS. **4**A–J shown in FIG. **46**. The interconnection of the microcycle decoder **1000** within the address chip is shown in FIG. **45** (with an address bit unit A0 typical of the units A0–A7, shown in greater detail in FIG. **47** and address bit unit A8, typical of address units A8–A12 shown in greater detail in FIG. **48**.) The address bit units A0–A7 of the microcycle decoder **1000** have an input line **1002** which carries the control signal LDL1 by which the low address bits A0–A7 are loaded. Similarly, the address bit units A8–A13 of the microcycle decoder **1000** have an input line **1004** which carries the control signal LDH1 by which the high address bits A8–A13 are loaded. The address bits are carried on the address chip data bus **66***b* which is connected to the microcycle data bus **66** by the tri-state buffer **1001** comprising units **1001***a–h* (with buffer unit **1001***a*, typical of the buffer units, shown in greater detail in FIG. **49**). The control signals LDL1 and LDH1 are generated by the logic element indicated generally at **1006** in a manner similar to that for the LDL1 and LDH1 control signals generated by the microcycle generator **106** of the data chip shown in FIG. **11**A.

Referring back to FIG. **44**, the outputs of the address bit units A0–A7 of the microcycle decoder **1000** are connected to an address decoder **1008** also logically similar to the address decoder **214**, (FIG. **11**B) of the data chip. Thus the address decoder **1008** decodes the addresses transmitted by the CPU to activate an associated select line **1010–1018**. As indicated in Table II, the address decoder **1008** will decode the address FH (when the INPUT control signal is present) which is operably connected to the horizontal feedback input register. As another example, address decoder **1008** will activate the line **1013** which is operably connected to the interrupt enable and mode registers when the address EH and the control signal OUTPUT are present.

The address decoder **1008** is shown in FIG. **45** to comprise a programmed logic array having input lines connected to the complemented and uncomplemented outputs of the address bit units A0–A7 of the microcycle decoder **1000**, and input line **1020** for the OUTPUT control signal and an input line **1022** for the control signal INPUT. The select lines **1010–1017** of the address decoder **1008** for the horizontal feedback register, a vertical feedback register, an interrupt line register, the interrupt enable and mode register, an interrupt feedback register, a function generator register, a vertical blank register, a low/high resolution mode register, and an output line **1018** to the memory cycle generator, respectively, are also indicated.

The address bits A0–A7 from the microcycle decoder **1000**, together with the address bits A8–A13 are conducted to a multiplexer **1024** which has 12 outputs as shown in FIG. **44**. A scan address generator **1026** generates a 12-bit address which is used to read pixel data from the display RAM. The scan address is generated synchronously with the raster scan of the display and incrementally increases from OH to FFFH once every field (1/60 seconds).

The multiplexer **1024** sends either the scan address or the address from the CPU (via microcycle decoder **1000**) to its 12 outputs. The outputs of the multiplexer **1024** are connected to a second multiplexer **1026** which multiplexes its 12 inputs to 6 address bits, MA0–MA5, in two "time slices" required for the 4K×1 **16** pin RAMs which comprise the display RAM.

When the multiplexer **1024** sends the address bits from the CPU to its 12 outputs, the 12 address bits A0–A11 of the 14 input address bits A0–A13 from the microcycle decoder **1000** are selected in the low-resolution mode. In the high resolution mode, the 12 address bits A2–A13 are selected. The mode of operation, whether low or high resolution, is set by the logic statement of a low/high resolution mode flip-flop or register **1030** shown in FIG. **45**. The flip-flop **1030** has the same address as the low/high flip-flop **606** of the data chip. (The logic circuitry of the flip-flop **1030** is shown in greater detail in FIG. **50**.) The flip-flop **1030** has an output line **1032** shown in FIG. **44** to be connected to a select input of the multiplexer **1024** so that the proper address bits from the CPU (via the microcycle decoder **1000**) are selected when the address from the CPU is to be transmitted to the outputs of the multiplexer **1024**.

The scan address generator **1026** which generates the 12-bit address used to read pixel data from the display RAM resets with every other 40 address counts in the

low resolution mode (as there are 40 bytes per horizontal display line) so that the scan address generator **1026** counts from **0** to **39** twice and then counts from **40** to **79** twice, etc. This results in each pixel of a field being scanned twice. In other words, each two-bit pixel data is utilized twice in two consecutive horizontal scans. Since a frame consists of two interleaved fields, any particular pixel extends four horizontal scan lines in the vertical direction.

The scan address generator **1026** has inputs for the HORIZONTAL DRIVE and VERTICAL DRIVE signals generated by the data chip to synchronize the scan address generator with the data chip and the TV raster scan.

The scan address generator is indicated generally at **1026** in FIG. **45** and comprises a counter **1034** having 12-bits **1034***a*-**1** and flip-flops **1036**–**1038**. (The counter bits **1034***a* and **1034***b* are shown in greater detail in FIGS. **51** and **52** respectively.) Bit **1034***c*, typical of bits **1034***c*-**1** is also shown in greater detail in FIG. **53**. As seen in FIG. **53**, each of the bits **1034***c*-**1** comprise a latch **1039** which is activated synchronously with the HORIZONTAL DRIVE pulse so that the count is latched up with each HORIZONTAL DRIVE pulse which occurs after each 40 counts.

A line **1040** (FIG. **45**) carrying the VERTICAL DRIVE signal from the data chip is connected by the logic elements indicated generally at **1042** to an input of the flip-flop **1038**. The output of the flip-flop **1038** is connected to the reset input R of the counter units **1034***a*-**1**. Thus, the VERTICAL DRIVE signal operates to reset the counter **1034** to 0 after each field has been scanned.

A line **1044** carrying the HORIZONTAL DRIVE signal from the data chip is connected by the logic elements indicated generally at **1046** to the input of the flip-flop **1037** whose output is connected to the D input of the flip-flop **1036** (which is shown in greater detail in FIG. **54**.) The Q and $\overline{Q}$ outputs of the flip-flop **1036** are connected to the **10** and **9** inputs, respectively, of the counter bits **1034***d*-**1**.

The other output of the flip-flop **1037** is connected to the input of a NOR gate **1048** having another input connected to the output line **1032** of the low/high resolution flip-flop **1030** and still another input connected to the output of the least significant bit of a line counter to be described later. The output of the NOR gate **1048** is connected to the 1 input of the counter bits **1034***a*-**1** and to the 2 input by an inverter **1050**.

The output of the NOR gate **1048** will go low with every other scan line (as determined by the output of the LSB **1138***a* of the line counter **1138**) upon a HORZ DR (HORIZONTAL DRIVE) pulse when in the low resolution mode. This causes the counter to be reset to the count that was latched up in the latches **1039**. Since the count latched up is 40 less than the current count, the counter will count from **0**–**39** twice, **40**–**79** twice, **80**–**119** twice, etc. Thus a line of pixel data is utilized to define 2 consecutive scan lines in each field in the low resolution mode.

The scan address generator **1026** has an input line **1052** which carries a clock signal which is connected by a transistor switch **1054** and an inverter **1056** to the 4 input of the bits **1034***a*-**1** and to the 3 inputs by an inverter **1058**, of the counter **1034**. The generation of the clock signal carried by the line **1052** will be described later also.

The multiplexer **1024** and **1028** comprise the NOR gates indicated at **1058**, each having an input connected to the address bit outputs A0–A6 of the microcycle decoder **1000**, 6 NOR gates **1060**, each having an input connected to the address bit outputs A2–A7, respectively, 6 NOR gates indicated at **1062**, each having an input connected to the address bit outputs A6–A11, respectively, and 6 NOR gates **1064**, each having an input connected to the address bits A8–A13, respectively, of the microcycle decoder **1000**.

The output line **1032** of the low/high resolution flip-flop **1030** is connected to the input of a NOR gate **1066** which is connected to the inputs of the NOR gates **1058** by the serially connected transistor switch **1068** and inverter **1070**, with the output line **1032** also connected to the input of a NOR gate **1072** whose output is connected to the input of the NOR gate **1062** by the serially connected transistor switch **1074** and an inverter **1076**. The output line **1032** is also connected to an inverter **1078** whose output is connected to the input of a NOR gate **1080**. The output of the NOR gate **1080** is connected to the inputs of the NOR gates **1060** by a serially connected transistor switch **1082** and inverter **1084**, with the output line **1032** also connected to an inverter **1086** whose output is connected to the input of a NOR gate **1088**. The output of the NOR gate **1088** is connected to the inputs of the NOR gates **1064** by a serially connected transistor switch **1090** and an inverter **1092**.

When the output of the low/high resolution mode flip-flop is a logical **0**, (corresponding to the low resolution mode), the output of the inverter **1078** is a logical **1**, the output of the NOR gate **1080** is a logical **0**, and the output of the inverter **1084** is a logical **1** driving the outputs of the NOR gate **1060** (corresponding to address bits A2–A7) to a logical **0** with the outputs of the NOR gate **1064** (corresponding to the address bits A8–A13) also being driven to a logical **0**. In this manner, the NOR gates **1058** corresponding to the address bits A0–A5 and the NOR gates **1062** corresponding to the address bits A6–A11 are selected in the low resolution mode. On the other hand, when the output of the flip-flop **1030** is a logical **1**, corresponding to the high resolution mode, the NOR gates **1060** and **1064** are selected which corresponds to the address bits A2–A13.

The multiplexers **1024** and **1028** further comprise 6 NOR gates **1094**, each having an input connected to the address bit outputs A0–A6 of the counter bits **1034***a*–*f*, respectively, and the 6 NOR gates **1096**, each having an input connected to the address bit outputs A6–A11 of the counter bits **1034***g*–*l*, respectively.

The multiplexers **1024** and **1026** have a VIDNXT2 clock signal input line **1098** which is connected to an input of the NOR gates **1066** and **1080** and to the NOR gate **1072** by a transistor switch **1100** and to the NOR gate **1088** by a transistor switch **1102**. The gates of the transistor switches **1100** and **1102** are connected to the clock signal Φ**1**. The VIDNXT2 clock signal input line **1098** is also connected to the inputs of the NOR gates **1094** by the series-connected transistor switch **1104** and inverter **1106**. The VIDNXT2 input line **1098** is also connected by the series-connected inverter **1108**, transistor switch **1110**, inverter **1112**, transistor switch **1114**, and inverter **1116** to the inputs of the NOR gate **1096**.

The logic state of the clock signal VIDNXT2 determines whether the address bits from the CPU (via the microcycle decoder **1000**) or the address bits generated by the scan address generator **1052** are conducted to the memory address bus indicated at **1118** which carries the

address bits MA0–MA5. VIDNXT2 occurs 40 times a scan line and indicates that the next RAM access cycle is a "video" cycle. In a video cycle, the system reads pixel data from the display RAM to be displayed on the screen. The generation of VIDNXT2 will be described later.

The outputs of the NOR gates **1058**, **1060**, **1062**, **1064**, **1094** and **1096** are selectively coupled to the output lines **1120-1125** by a plurality of transistor switches **1128**. The output lines **1120**, **1121** and **1122** are each connected by a series-connected NOR gate **1130** and buffer **1132** (shown in greater detail in FIG. **55**), to the MA0, MA1 and MA2 bits of the memory address bus **1118**. The output lines **1123**, **1124** and **1125** are each connected by series-connected NOR gate **1130** and buffer **1134** (shown in greater detail in FIG. **56**) to the MA3, MA4 and MA5 bits of the memory address bus **1118**.

If the logic state of VIDNXT2 on line **1098** is a logical **0**, the output of the inverters **1106** and **1116** are a logical **1** which drives the outputs of the NOR gates **1096** and **1094** (corresponding to scan address generator bits A0–A11) to a logical **0**. Thus, the address bits from the scan address generator are not conducted to the memory address bus **1118** when VIDNXT2 is a logical **0**. On the other hand, when the state of VIDNXT2 on line **1098** is a logical **1** indicating the next cycle is a video cycle, the output of the inverters **1070**, **1084**, **1072** and **1092** are a logical **1** which drives the outputs of the NOR gates **1058**, **1060**, **1062** and **1064** (corresponding to the address bits from the CPU) to a logical **0**.

The NOR gates **1094** have an additional clock signal input Φ1 with the NOR gates **1096** also having an additional clock signal Φ2 which is the inverse of the clock signal Φ1. Thus, when the address bits from the scan address generator are to be transmitted to the memory address bus **1118**, the clock signal Φ1 goes low first which allows the address bits A0–A5 to be conducted first, followed by the address bits A6–A11 from the NOR gates **1096** when the clock signal **01** goes high and the clock signal **01** goes low.

Similarly, the NOR gates **1058** (corresponding to the address bits A0–A5 during the low resolution mode) and the NOR gates **1060** (corresponding to the address bits A2–A7 during the high resolution mode) have an additional clock signal input Φ1 and the NOR gates **1062** (for bits A6–A11) and **1064** (for bits A8–A11) have the additional clock signal Φ2. When the address bits from the CPU are to be conducted to the memory address bus **1118**, the bits are also transmitted in two 6-bit slices, A0–A5 first, then A6–A11 (low resolution mode) or A2–A7 first, then A8–A13 (high resolution mode).

SCREEN AND LIGHT PEN INTERRUPTS

An additional function of the address chip concerns interrupts, namely a "screen" interrupt and "light pen" interrupt. The purpose of the screen interrupt is to synchronize the system "software" with the video system. The CPU under the direction of the software or programming stored in the ROM's, can send a line number to an interrupt line register **1136** (which has address FH) shown in FIG. **44**.

In the low resolution mode, bit **0** of interrupt line register **1136** is set to **0** and the line number is set to bits **1–7**. In the high resolution mode, the line number is sent to bits **0–7**. If the screen interrupt is enabled, the CPU will be interrupted when the display completes scanning the line which is contained in the interrupt register. A line counter **1138** counts the lines of pixels as they are displayed on the screen and the output of which is compared with the line number stored in the interrupt line register **1136** by a comparator **1140**.

The output of the comparator **1140** sets a flip-flop **1142** which utilizes the HORIZONTAL DRIVE signal as a clock signal. The output of the flip-flop **1142** is connected to interrupt circuitry **1144** which generates an interrupt signal $\overline{\text{INT}}$ on an output line **1146** when the screen interrupt is enabled. The interrupt signal $\overline{\text{INT}}$ is transmitted to the CPU.

This interrupt can be used for timing since each line is scanned 60 times a second. It can also be used in conjunction with the color registers to make as many as 256 color-intensity combinations appear on a screen at the same time. Thus, after a screen interrupt, the data within the 8 color registers which can define 8 different color-intensity combinations may be changed to 8 additional color intensity combinations with the interrupt line register contents also being changed to a subsequent line number. When this line is reached the process may be repeated until the full 256 possible combinations represented by the 5 color bits and 3 intensity bits in each color register have been displayed.

The light pen interrupt occurs when the light pen trigger is pressed and the video scan of the display crosses the point on the screen were the light pen is located which generates a signal $\overline{\text{LIGHTEN}}$/ on an input line **1148** to the interrupt circuitry **1144**. When the light pen interrupt is enabled, the interrupt circuitry **1148** generates the interrupt signal $\overline{\text{INT}}$ and transmits it to the CPU.

The CPU interrupt routine resulting from the $\overline{\text{INT}}$ signal can read two registers to determine the position of the light pen. The line number which indicates the vertical position of the light pen is read from a vertical feedback register **1150** which has address EH. In the high resolution system, the line number is in bits **0–7**. In the low resolution system, the line number is in bits **1–7**, and bit **0** should be ignored.

The horizontal position of the light pen can be determined by reading a horizontal feedback register **1152** having address FH and subtracting 8. In the low resolution system, the resultant value is the pixel position **0** to **159**. In the high resolution system, the resultant must be multiplied by 2 to give the pixel position, **0** to **358**.

A horizontal position counter **1154** counts the pixel position as the corresponding pixels are scanned. The counter **1154** is reset by the HORIZ DR signal and is clocked by the clock signal. The output of the horizontal position counter **1154** is connected to the horizontal feedback register **1152**. The output of the line counter or vertical position counter **1138** is connected to the vertical feedback register **1150**. When the light pen interrupt is enabled, the interrupt circuitry **1144**, upon the occurence of a $\overline{\text{LIGHTEN}}$/ signal, causes the horizontal feedback register **1152** to latch up the current horizontal position as indicated by the horizontal position counter **1154**. Similarly, the vertical feedback register **1150** is caused to latch up the current vertical position or line as indicated by the line counter **1138**.

When the CPU acknowledges an interrupt, it reads 8 bits of data from the data bus. It then uses the data as an instruction or an address. This data is determined by the contents of an interrupt feedback register **1156** which has address DH. The contents of the interrupt feedback register **1156** is originally set by the placement of data in it by the CPU. In responding to a screen interrupt, the contents of interrupt feedback register are placed di-

rectly onto the data bus **66***a*. In responding to a light pen interrupt, the lower 4 bits of the data bus are set to 0 and the upper 4 bits are the same as the corresponding bits of the interrupt feedback register **1156**. Thus, if the lower 4 bits are 0, the CPU can determine that the light pen initiated the interrupt. Otherwise, the interrupt is a screen interrupt.

In order for the Zilog Z-**80** to be interrupted, the internal interrupt enable flip-flop must be set by an EI instruction and one or two of the external interrupt enable bits of an interrupt enable and mode registers **1158** which have address EH must be set. If bit **1** is set, light pen interrupts can occur. If bit **3** is set, screen interrupts can occur. If both bits are set, both interrupts can occur and the screen interrupt has high priority.

The interrupt mode bits of the interrupt enable and mode register **1158** can determine what happens if an interrupt occurs when the Zilog Z-**80** CPU interrupt enable flip-flop is not set. Each of the two interrupts may have a different mode. In "mode **0**" the Z-**80** will continue to be interrupted until it finally enables interrupts and acknowledges the interrupt. In mode **1**, the interrupt will be discarded if it is not acknowledged by the next instruction after it occured. If mode **1** is used, the software should be designed such that the system will not be executing certain Zilog Z-**80** instructions when the interrupt occurs. The OP codes of these instructions being with CDH, DDH, EDH and FDH.

The line counter **1138** is shown in greater detail in FIG. **45** and comprises 8 bits **1138***a–h*. (The bit **1138***a* is shown in greater detail in FIG. **57** with the bit **1138***b*, typical of bits **1138***b–h* shown in greater detail in FIG. **58**.) The counter **1138** has an input line **1160** which is connected to the output of the logic elements **1046** which have the HORIZONTAL DRIVE signal input. The HORIZONTAL DRIVE signal occurs once for each line of pixels displayed on the screen. The line counter **1138** synchronously counts the lines as they are displayed and indicates the current line number being displayed. The line counter **1138** has a reset input line **1162** which is connected to the output of the logic elements **1042** which have the VERTICAL DRIVE input signal. The line counter **1138** resets on each vertical drive pulse which occurs at the end of each field.

The output of each of the counter bits **1158***a–h* are connected to the inputs of the vertical feedback register indicated generally at **1150** and comprising bits **1150***a–h* (with typical bit **1150***a* shown in greater detail in FIG. **59**). The vertical feedback register **1150** has a latch enable line **1164** connected to the output of the interrupt circuitry indicated generally at **1144**. When this line is enabled, in response to a $\overline{\text{LIGHTEN}}$/ signal from the light pen, the vertical feedback register **1150** latches up the current count contained in the line counter **1138**. The output of each bit **1150***a–h* is connected to the data bus **66***b*. The vertical feedback register **1150** has an output enable input connected by an inverter **1166** to the register select line **1011** from the address decoder **1008**. The CPU may read the contents of the vertical feedback register **1150** by trransmitting its address to the address decoder wherein the line number contained within the vertical feedback register **1150** is conducted onto the data bus **66***b* to the CPU. The CPU will read the contents of the vertical feedback register **1150** in response to an interrupt signal $\overline{\text{INT}}$ after determining that the interrupt is a light pen interrupt by reading the interrupt feedback register. In this manner, the CPU can determine the vertical position of the light pen.

The horizontal position counter is indicated generally at **1154** and comprises bits **1154***a–h* (with bit **1154***a* shown in greater detail in FIG. **60** and bit **1154***b*, typical of bits **1154***b–h*, shown in greater detail in FIG. **61**.) The counter **1154** further comprises a programmed logic array indicated generally at **1168**. The horizontal position counter **1154** has clock inputs **Φ1** and **Φ2** and synchronously counts the pixels of the line of pixels being displayed. Thus, the count contained within the counter **1154** corresponds to the horizontal position of the last pixel displayed. The counter **1154** has a reset input line **1170** which is connected to the output of the logic elements **1046** which have the HORIZONTAL DRIVE signal input. The HORIZONTAL DRIVE signal which occurs at the end of each line of the raster scan causes the horizontal position counter **1154** to reset.

The outputs of the bits **1154***a–g* of the horizontal position counter **1154** are connected to the inputs of the bits **1152***a–g*, respectively, of the horizontal feedback register indicated generally at **1152**. (Logic circuitry of the bits **1152***a–g* is similar to that shown for bit **1158***a* of the vertical feedback register shown in FIG. **59**.) The output of the bits **1152***a–g* are connected to the data bus **66***b*.

The horizontal feedback register **1152** has a latch enable line connected to the line **1164** from the interrupt circuitry, such that the register **1152** can latch-up the current position count contained within the horizontal position counter **1154** upon a signal from the interrupt circuitry **1144** in response to the signal $\overline{\text{LIGHTEN}}$/ from the light pen. The horizontal feedback register **1152** has an input connected to the register select line **1010** from address decoder **1008** whereby the CPU may read the contents of the horizontal feedback register **1152** by transmitting the address of the horizontal feedback register **1152** to the address decoder. The CPU will read the horizontal feedback register to determine the horizontal position of the light pen in response to a light pen interrupt.

The output of the bits **1154***a–h* of the horizontal position counter **1158** are also connected to a decoder indicated generally at **1171** which includes a PLA **1275**, a J-K flip-flop **1276** (shown in greater detail in FIG. **62**) and pull-ups **1173** whose outputs are selectively coupled to a NOR gate **1175**. The output of the NOR gate **1175** is connected to a plurality of delays and inverters at **1177** which have an output line **1098** which carries the clock signal VIDNXT2.

VIDNXT2 is activated when the horizontal counter **1154** indicates a negative 1 or if bit 0 is a 1 and bit 8 is a 0, which occurs 40 times a scan line. Since the MUX **1024** utilizes VIDNXT2 as a select signal, the addresses generated by the scan address generator **1026** are selected 40 times a line. Furthermore, the scan address generator clock signal input line **1052** is connected to an output of the elements **1177** so that the scan address generator is clocked 40 times a scan line to output 40 sequential addresses synchronously with the MUX **1024**. VIDNXT2 is also utilized to generate the RAS (row address strobe) signals at **1179** for the video cycles.

The output of the line counter **1138** is also connected to the inputs of the comparator **1140** shown to comprise 8 exclusive-OR units **1140***a–h* (with unit **1140***a*, typical of the units **1140***a–h*, shown in greater detail in FIG. **63**) and a PLA **1172** connected to the outputs of the units **1140***a–h*. The comparator **1140** further comprises the flip-flop **1142** connected to the output of the PLA **1172**

by a NOR gate **1174**. The comparator **1140** has further inputs connected to the outputs of the interrupt line register **1136** which comprises bits **1136***a–h* (with the bits **1130***a–h* logically similar to that shown in FIG. **50**). The interrupt line register **1136** which stores the screen interrupt line number from the CPU, has further input connected to the register select line **1012** from the address decoder **1008** by which the CPU may address the interrupt line register **1136** in order to input the interrupt line number.

The comparator **1140** compares the number of the current line being displayed by the display unit as indicated by the line counter **1138** with the line number stored in the interrupt line register **1136**. When the line counter reaches the number in the line register **1136**, the flip-flop **1142** (shown in greater detail in FIG. **64**) is set. The flip-flop **1142** has an output line **1176** connected to the interrupt circuitry shown at **1144** which carries the screen interrupt signal to the interrupt circuitry.

The interrupt circuitry **1144** has an input line **1178** which carries the $\overline{\text{LIGHTEN}}$/ signal which indicates that the raster scan has crossed the point where the light pen **62** (FIG. **2**) is located. The line **1178** is connected by resistor **1180** and NOR gate **1182** to the clock input of a flip-flop **1184**. The output of the flip-flop **1184** is connected to the input of a flip-flop **1186** (with flip-flop **1184** logically similar to that shown in FIG. **64** and flip-flop **1186** logically similar to that shown in FIG. **54**).

The interrupt mode and enable registers **1158** comprise 5 bits **1158***a–e* (with bit **1158***b* shown in greater detail in FIG. **65** and bits **1158***a* and **1158***c–e* logically similar to that shown in FIG. **50**). The output of bit **1158***b* or bit **1** (which is the light pen enable bit) is connected to the input of an AND gate **1188** which is connected to the input of a NOR gate **1190**. The other input to NOR gate **1190** is connected to the output of bit **4** or bit **1158***e* of the register **1158**. The other input of the AND gate **1188** is connected to the output of a flip-flop **1192** (shown in greater detail in FIG. **66**) whose input is connected to the output of a decoder indicated generally at **1194** which decodes the output of the horizontal counter **1154**. The output of the NOR gate **1190** is connected by a NOR gate **1196** to the D input of the flip-flop **1184**.

The output line **1176** from the flip-flop **1142** (which carries the screen interrupt signal) is connected to the clock input of a flip-flop **1198** (logically similar to that of flip-flop **1184**). The output of the flip-flop **1198** is connected to the D input of a flip-flop **1200** (which is logically similar to that shown in FIG. **54** for the flip-flop **1186**).

The output of bit **3** or bit **1158***d* (which is the screen interrupt enable bit) of the interrupt enable and mode registers **1158** is connected to the D input of the flip-flop **1198**. The output of the flip-flop **1184** is also connected by a line **1202** to the input of a plurality of logic elements **1204** whose output is connected to a plurality of logic elements **1206** having the output line **1164** which is connected to the latch enable inputs of the vertical feedback register **1150** and horizontal feedback register **1152**. The output of the flip-flop **1184** is also connected to the input of a NOR gate **1208** whose output is connected to a plurality of logic elements **1210** having an output line **1212**. The output line **1212** is connected by a line **1214** to an output buffer **1216** whose output line **1218** carries the control signal $\overline{\text{INT}}$ which is the interrupt control signal to the CPU. The output line **1212** is also connected by a plurality of logic elements indicated generally at **1220** (which includes a flip-flop **1221**) to the input of a flip-flop **1222**. (The flip-flop **1221** and **1222** are logically similar to the flip-flop shown in FIG. **67**). The $\overline{Q}$ output of the flip-flop **1222** is connected to the input of NOR gates **1223** and **1224** which have other inputs connected to a line **1225** which carries the CPU control signal M1 from the output of an inverter **1226** whose input is connected by a resistor **1228** to the CPU control signal $\overline{\text{M1}}$ input **1230**.

The output of the NOR gate **1223** is connected to the input of a NOR gate **1232** which has an input connected to the output of the NOR gate **1234**. The NOR gate **1234** has an input connected to the $\overline{Q}$ output of the flip-flop **1186** into the Q output of the flip-flop **1200** and an input connected to a line **1236** which is connected to the output of an inverter **1238**.

The output of the inverter **1226** is connected to the input of a NOR gate **1240** whose output is connected to a NOR gate **1242**. The NOR gate **1242** has another input connected to the CPU control signal $\overline{\text{IORQ}}$ input pad **1244**. The output of the NOR gate **1242** is connected by a buffer **1246** to the input of the inverter **1238**.

The output of the NOR gate **1232** is connected by an inverter **1248** to the reset input of the flip-flop **1184**. The output of the NOR gate **1224** is connected to the input of a flip-flop **1250** which has an input connected to the output of a NOR gate **1252**. The NOR gate **1252** has an input connected to the $\overline{Q}$ output of the flip-flop **1200** and an input connected to the line **1236**.

The output of the bit **1158***a* of the interrupt mode and enable register **1158** (which is the mode bit for the light pen interrupt) is connected to the input of the NOR gate **1223**. The $\overline{Q}$ output of the flip-flop **1158***c* (which is the mode bit for the screen interrupt) is connected to an input of the NOR gate **1224**.

The output of the AND gate **1188** is a logical **1** when the light pen interrupt enable bit **1158***b* and the output of the flip-flop **1192** from the decoder **1194** are logical **1**. The flip-flop **1192** is set to **1** when the pixels being displayed are defined by the display RAM, i.e., they are not background pixels. A logical **1** output of the AND gate **1188** causes the NOR gate **1190** to output a logical **0** causing the NOR gate **1196** to output a logical **1** which is presented to the D input of the flip-flop **1184**.

The $\overline{\text{LIGHTEN}}$/ signal on line **1178** goes low when the raster scan crosses the point where the light pen is located causing the output of the NOR gate **1182** to go high which clocks the flip-flop **1184** to a logical **1** when the D input is a **1** which is a function of the light pen enable bit **1158***b*. The flip-flop **1186** will also be clocked to a logical **1**. Since the output of the flip-flop **1184** is a logical **1**, the output of the NOR gate **1208** is a logical **0** causing the output line **1212** and line **1214** to subsequently become a logical **1**. This in turn causes the output line **1218** to become a logical **0** which is the CPU interrupt control signal $\overline{\text{INT}}$ for interrupts.

The logical **1** state on the line **1214** subsequently causes the flip-flop **1222** to assume a logical **1** state and the $\overline{Q}$ output to assume a logical **0**. With the light pen mode bit **1158***a* at a logical **0** (mode **0**) the $\overline{Q}$ output of the bit **1158***a* is a logical **1** which causes the output of the NOR gate **1223** to be a logical **0** and thus the output of the NOR gate **1232** depends upon the output of the NOR gate **1234**. The flip-flop **1193** is set when the line number contained in the interrupt line register equals the current line number as indicated by the line counter (which initiates a screen interrupt). For purposes of

illustration, it will be assumed that this condition is not true and that the output of the flip-flop **1198** which is connected to an input of the NOR gate **1234** is a logical **0**. The state of the input line **1236** to the NOR gate **1234** is a logical **0** when the CPU acknowledges an interrupt. Thus, if the interrupt is acknowledged, all of the inputs of the NOR gate **1224** are a logical 0 and the output is a logical **1** causing the output of the NOR gate **1232** to be a logical **0**. This output is inverted by the inverter **1243** which causes the flip-flop **1184** to be reset which causes the interrupt signal $\overline{INT}$ on output line **1218** to return to a logical 1 state.

If the interrupt has not been acknowledged, the state of the input line **1236** is a logical **1** causing the output of the NOR gate **1234** to be a logical **0**, the output of the NOR gate **1232** to be a logical **1**, and the output of the inverter **1248** to be a logical **0** and the flip-flop **1184** will not be reset. Thus, the interrupt signal $\overline{INT}$ will remain a logical **0** and the CPU will continue to be interrupted until it acknowledges the interrupt since the light pen interrupt is in mode **0**.

If the light pen mode bit **1158***a* contained a logical **1** (mode **1**) the $\overline{Q}$ output of bit **1158***a* is a logical **0**. Since the $\overline{Q}$ output of the flip-flop **1222** is a logical **0**, when the **M1** signal also goes low (after the next instruction has been fetched) the output of the NOR gate **1223** will become a logical **1** causing the output of the NOR gate **1232** to be a logical **0** and the output of the inverter **1248** to be a logical **1** which resets the flip-flop **1184**. When this flip-flop is reset, the interrupt signal $\overline{INT}$ returns to a logical **1**. Thus, the CPU must acknowledge the interrupt upon the next instruction if at all, in Mode **1**.

The output of the screen interrupt enable bit **1158***d* is the D input of the flip-flop **1198** which is clocked by the output of the flip-flop **1142**. As noted before, the flip-flop **1142** is set when the line number being displayed as indicated by the line counter **1138** reaches the line number stored in the interrupt line register **1136** which initiates a screen interrupt when enabled. If the enable bit **1158***d* contains a 1, the flip-flop **1198** will be clocked to **1** when the flip-flop **1142** is set. Otherwise, it will remain 0 since its D input is **0**.

Since the output of the flip-flop **1198** is also connected to an input of the NOR gate **1208**, when the flip-flop **1198** is set, the interrupt control signal $\overline{INT}$ subsequently goes low indicating an interrupt just as for the light pen interrupt. Modes **0** and **1** for the screen interrupt are indicated by the bit **1158***c* also operate in a manner similar to that for the light pen interrupt.

Thus, the flip-flop **1222** subsequently assumes a logical **1** state when the $\overline{INT}$ signal is activated due to a screen interrupt as well. With the screen interrupt mode bit **1158***c* at a logical **0** (mode **0**), the $\overline{Q}$ output of the bit **1158***c* is a logical **1** which causes the output of the NOR gate **1224** to be a logical **0** and thus the output of the NOR gate **1250** depends upon the output of the NOR gate **1252**.

The Q output of the flip-flop **1200** is set to 1 (after being clocked by M1) when the flip-flop **1198** is set and the the $\overline{Q}$ output of the flip-flop **1200** goes to 0. When the CPU acknowledges the interrupt (i.e., the state of the line **1236** becomes a 0) the output of the NOR gate **1252** becomes a logical **1**. This causes the output of the NOR gate **1250** to become a logical **0**, the output of the inverter **1251** to become a logical **1** and the flip-flop **1198** to reset. This in turn deactivates the interrupt signal $\overline{INT}$.

Had the screen interrupt mode bit **1158***c* been set to **1** (i.e., mode **1**), the output of the NOR gate **1224** would go to **1** when the CPU signal **M1** goes to **0** (i.e., after the next instruction). This causes the output of the NOR gate **1250** to become a logical **0**, the output of the inverter **1251** to become a logical **1** and the flip-flop **1198** to be reset. Thus, the interrupt will be discarded if not acknowledged by the next instruction in mode **1**.

The input feedback register is indicated at **1156** and comprises 8 bits **1156***a–h* (with bit **1156***a* typical of bits **1156***a–d* shown in greater detail in FIG. **68** and bit **1156***e* typical of bits **1156***e–h* shown in greater detail in FIG. **69**). The D input and Q output of each bit of the interrupt feedback register **1156** is connected to the data bus **66***b*. The interrupt feedback register **1156** has an input connected to the register select line **1024** from the address decoder **1008** by which the CPU may address the interrupt feedback register and store interrupt data in the register. Each bit also has a latch enable input connected to the line **1236** which goes low when the CPU acknowledges the interrupt. Thus, when the CPU acknowledges an interrupt, the data contained within the interrupt feedback register **1156** is conducted to the data bus **66***b* and transmitted to the CPU. The bits **1156***a–d* have a reset input connected by a line **1260** through the $\overline{Q}$ output of the flip-flop **1200**.

When the flip-flop **1200** contains a logical **1** indicating a screen interrupt, the $\overline{Q}$ output is a logical **0** and the data stored in the bits **1156***a–h* by the CPU is conducted back to the CPU on the data bus **66** unmodified when the CPU acknowledges the interrupt. Since the data is unmodified, it indicates to the CPU that the interrupt was a screen interrupt. However, if the flip-flop **1200** contains a logical **0**, the $\overline{Q}$ output is a logical **1** which causes the bits **1156***a–d* to all conduct 0's onto the data bus **66** in response to an interrupt acknowledge signal indicating a light pen interrupt. The bits **1156***e–h* are conducted unmodified. Since the flip-flop **1200** is set by the occurrence of a screen interrupt, screen interrupts have priority over light pen interrupts.

The output of the line counter **1138** is shown in FIG. **44** to be also connected to a comparator **1262** which also has inputs from a vertical blank register **1264**. The vertical blank register **1264** contains the line number at which pixel data from the display RAM is no longer used to define the pixels displayed on the screen and has the same address as the vertical blank register of the data chip but is utilized for a different purpose. When the line counter **1138** reaches the line number contained within the vertical blank register **1264**, the comparator **1262** outputs a signal which is used by a memory cycle generator **1266** to activate a memory refresh cycle.

The memory cycle generator controls memory cycles generated by either CPU initiated reads or scan address generator read operations. The generator inputs include the CPU control signals $\overline{MREQ}$, $\overline{RD}$, $\overline{IORQ}$, $\overline{M1}$ and $\overline{RFSH}$, and address bits **A12–A15** which are transmitted directly from the CPU. The **RAS0–RAS3** outputs are generated by the memory cycle generator **1266** and are used to activate memory cycles.In the low resolution mode, only **RAS0** is used to one bank of RAM (4K by 8). In the high resolution mode, all four RAS signals are used to control four banks of RAM (16k×8). Two other signals generated are WRCTL and LTCHDO which are control signals to the data chip. Also, a $\overline{Wait}$ signal is generated to initiate a wait state in the CPU.

The vertical blank register is indicated at **1264** in FIG. **45** and comprises 8 bits **1264***a–h* (with each bit logically similar to that shown in FIG. **50**). The vertical blank register **1264** has a register select line **1016** at which the CPU may address the vertical blank register and input data from the data bus **66***b* which is the line number at which "blanking" occurs. The Q and $\overline{Q}$ output of each bit of the vertical blank register **1264** is connected to the comparator indicated generally at **1262** which comprises a programmed logic array **1268** which includes a plurality of pull-down transistors **1269** and pull-up transistors **1270** and a plurality of NOR gates **1271**. The comparator **1262** also has inputs connected to the output of the line counter **1138** as previously mentioned.

The output of the comparator **1262** is connected to the D input of a flip-flop **1272** (shown in greater detail in FIG. **64**) which has a reset input connected to the output of a flip-flop **1300** (shown in greater detail in FIG. **58**) which has an input connected to the most significant bit **1138***h* circuit of the line counter **1138**. The $\overline{Q}$ output of the flip-flop **1272** is connected by a line **1274** to an input of the memory cycle generator indicated generally at **1266**.

The memory cycle generator comprises a PLA **1275**, which includes pull-down transistors **1276** and pull-up transistors **1278**, and a J-K flip-flop **1280** (shown in greater detail in FIG. **70**). The generator **1266** further comprises J-K flip flops **1282***a–g* (each of which is logically similar to that shown in greater detail in FIG. **66**) and bits **4** and **5** of a function generator register (each of which is logically similar to that shown in FIG. **50**) having the same address as the function generator register of the data chip.

A RAS signal is generated for display RAM accesses and thus is the function of $\overline{MREQ}$, and VIDNXT2 and the address bits A12, A13, A15 (to determine whether the memory access concerns the display RAM). A $\overline{WAIT}$ signal is generated to initiate a wait state in the CPU for all input and output operations (IORQ) to compensate for any delay due to the microcycler since the CPU address bus and data bus "time share" the microcycle data bus. Wait states are similarly initiated for CPU read and write operations (for data and instructions). Two wait states from and to the display RAM are generated if the CPU is executing instructions in the display RAM.

An additional wait state is initiated if the CPU and the video processor attempt to access the display RAM at the same time. A $\overline{WAIT}$ signal is transmitted to the CPU when VIDNXT2 is active (indicating the next memory access cycle is to be a video cycle) and the CPU also requests the display RAM (MREQ). LTCHDO becomes active when data being read from the diplay RAM is on the display RAM data bus. LTCHDO enables the OR/exclusive-OR circuit of the data chip to latch up the data on the memory data bus. WRCTL indicates that the present memory cycle is a write operation rather than a read.

The relationship between the input signals $\overline{MREQ}$, $\overline{RD}$ from the CPU and the clock signal Φ to the memory cycle generator outputs $\overline{WAIT}$, RAS, $\overline{WRCTL}$ and LTCHDO are shown for CPU read and write operations to the display RAM with FIGS. **12A** and D illustrating write operations and FIGS. **12B** and C, read operations. FIGS. **12C** and D illustrate the extra wait state generated when a CPU read or write conflicts with a video cycle by the video processor. The shaded areas of the MA0–MA5 lines are determined by the address bits MA0–MA5.

The relationship between the inputs of CPU control signals $\overline{IORQ}$, $\overline{RD}$ and the clock signal Φ and the memory cycle output WAIT is shown for input/output read operations in FIGS. **12E** and G and input/output write operations in FIG. **12F**. FIG. **12E** illustrates an I/O read from the switch matrix ports **10H–17H** and FIG. **12G** illustrates the I/O reads from the other ports.

The RAS0 output of the address chip is shown in FIG. **10C** to be connected to the D input of a flip-flop **956** of the logic elements **954**, whose $\overline{Q}$ output carries the $\overline{CS/RAS}$ (chip select and row address strobe) signal for the display RAM **42** and is connected to the RAM control signal bus **958**. The clear input of the flip-flop **956** is connected to the output of a NAND gate **960** having inputs connected to the Q output of the flip-flop **956**, the clock signal Φ from the buffer **100** and the $\overline{Q}$ output of a flip-flop **962**.

The D input of the flip-flop **962** is connected to the clock signal Φ and the Q output is connected to the clock input of the flip-flop **956**. The flip-flop **962** is clocked by the clock signal $\overline{PX}$. The flip-flop **956** operates to invert the signal RAS0 and to delay it to produce the $\overline{CS/RAS}$ signal at its $\overline{Q}$ output, the delay being a function of the clock signal Φ and $\overline{PX}$ inputs to the logic elements **954**.

The $\overline{DATEN}$ output of the data chip **54** is connected to the input of a NOR gate **964** having a grounded input and an output connected to the enable input of the tri-state drivers **966***a–h* connected to the DO output of the RAM chips **104***a–h*, respectively. The output of the drivers are connected to the memory data bus **102**.

The output of the NOR gate **964** is connected to the input of a NAND gate **968** whose output is connected to the control signal bus **958** and carries the write enable signal, $\overline{WE}$. The other input of the NAND gate **968** is connected to the Q output of a flip-flop **970** whose D input is connected to the Q output of the flip-flop **962**. The $\overline{Q}$ output of the flip-flop **970** is connected to the control signal bus **958** and carries the column address strobe ($\overline{CAS}$) signal. The flip-flop **970** is clocked by the output of a flip-flop **972** which is enabled by the $\overline{PX}$ and PX clock signals.

When $\overline{DATEN}$ goes low, the output of the NOR gate **964** goes high which turns off the drivers **966***a–h*. Subsequently, when the clock signal from the $\overline{Q}$ output of the flip-flop **970** goes high, the output of the NAND gate **968** goes low which enables the RAM's **104***a–h* to have data written in them.

I/O CHIP

As noted before, the control handles **12***a–d* and the keypad **18** (FIG. **2**) are connected to the I/O chip **50** and provide signals in response to manipulation by the players or operators to the I/O chip. The CPU **46** of the digital computer **44** receives the keypad and control handle input signals from the I/O chip **50** in the digital form. The I/O chip has a music processor which provides audio signals to RF modulator **58** in response to output data signals from the computer to play melodies or generate noise through the TV **28**.

The interconnection of the I/O chip **50** within the system is shown in FIG. **10C**. The I/O chip has inputs MXD0–MXD7 connected to the microcycle data bus **66** and inputs $\overline{RD}$ and $\overline{IORQ}$ for the CPU control signals READ AND INPUT/OUTPUT REQUEST, respectively and inputs for the clock signals Φ and $\overline{\Phi}$.

Outputs POT0-POT1 are each operatively connected to one of the potentiometers of the player control handles **12***a–d*. A signal transmitted to one of the potentiometers results in a signal returned to input MONOS which will be more fully explained later. Outputs SO0–SO7 are selectively coupled to the keys and switches of the keypad **18** and player control handles **12***a–d* of the switch matrix shown in FIG. **8**. Activation of one of the outputs SO0–SO7 results in signals being received at the switch inputs SI0–SI7 also to be more fully explained later. The I/O chip has power supply inputs VDD, VGG and VSS connected to +5v, +10v and ground, respectively, a TEST input connected to the +5v supply and a $\overline{\text{RESET}}$ input connected to the extension plug **77**.

The CPU communicates with the I/O chip shown in block diagram in FIGS. **71**A–C, through input and output instructions. Each input or output instruction has an address at which data is to be inputted from or outputted to. This address is transmitted to the input-/output chip **50** (FIG. **71**A) via the microcycle data bus **66**, tri-state buffer **1400**, and I/O data bus **66***c* to a microcycle decoder **1402** which assembles the address in a manner similar to that described for the microcycle decoder of the data chip. The microcycle decoder **1402** assembles the **11** bit address, **A0-A10**, which is decoded by an address decoder **1404**. The address decoder **1404** has an input for the $\overline{\text{INPUT}}$ control signal and input for the $\overline{\text{OUTPUT}}$ control signal which are activated in conjunction with an input or an output instruction, respectively. The address decoder **1404** decodes the address from the microcycle decoder **1402** and activates one of the select lines **1406–1415** with select lines **1406** comprising eight select lines SO0–SO7. The particular select line activated depends upon the address transmitted to the address decoder **1404** and the state of the INPUT and OUTPUT control signals.

The select lines SO0–SO7 have addresses **10–17**H and are activated with an input instruction. When one of these lines is activated, the switch matrix (shown in FIG. **8**) will feedback the associated 8 bits of data on an input bus, SI0–SI7 indicated at **1418** to a multiplexer **1420** which will gate the data to a data bus **66***d* which is connected to the microcycle data bus **66** by the tri-state buffer **1400**. Thus for example, if an input instruction transmits the address **12**H to the address decoder **1404**, the select line SO4 will be activated which will cause the keypad data indicated at **1422** (FIG. **8**) of the switch matrix to be conducted to the microcycle data bus on the input data bus **1418**.

The select lines **1407–1414** are output register select lines. These lines are activated with the concurrence of the OUTPUT control signal (which is activated by an output instruction) and the associated address (Table II) of a master oscillator, tone A frequency, tone B frequency, tone C frequency, vibrato and noise volume registers. In addition are the tone C volume, noise modulation, and MUX output registers and tone A and tone B volume output registers. These output registers are part of the music processor in which the CPU loads data with output instructions. This data determines the characteristics of the audio signal that is generated.

The CPU can read the positions of the four potentiometers **17** of the four player control handles **12***a–d* (FIG. **1**) through an analog-digital converter circuit indicated generally at **1422**. The potentiometers are continuously scanned by the analog-digital (A-D) converter circuit and the digital results of the conversion are stored in the pot **0–3** registers **1424**. The CPU reads these registers with input instructions.

The CPU can address the registers **1424** by transmitting the address of one of the registers to the address decoder **1404** which activates the select line **1415**. A potentiometer (or pot) register address decoder **1426** has an input for the select line **1415** as well as the address bits A0 and A1. The pot register address decoder **1426** decodes these inputs to select one of the four registers, pot **0**-pot **3**. A selected register feeds back all **0**'s when the corresponding potentiometer is turned fully counterclockwise and all 1's when turned fully clockwise.

The output of a 2-bit "scan" counter **1428** is connected to the inputs of a scan decoder **1430** which has a 4-bit output line **1432** indicated as POT **0-3** and **4** register select lines connected to the pot **0-3** registers **1424**. Each line of the POT **0-3** lines **1432** is operatively connected to an associated potentiometer. Thus, for example, the POT **0** line of the line **1432** is shown connected to the associate potentiometer **17** of the player control handle **12***a* in FIG. **72**. The potentiometer is connected to a capacitor **1436** having an output line **1438** which carries the analog signal MONOS.

Referring back to FIG. **71**A, a comparator **1440** has an input for the analog signal MONOS which is compared to a reference signal REF. The output of the comparator **1440** is connected to a counter **1442** which counts until the voltage signal MONOS across the capacitor **1436** reaches the reference REF.

The scan decoder **1430** decodes the output of the scan counter **1428** to sequentially activate the POT **0**, POT **1**, POT 2 and POT 3 lines of the lines **1432**. Thus, when the Pot 0 line is activated, the capacitor **1436** shown in FIG. **72** will begin to charge and the MONOS analog signal will begin rising. As the MONOS signal rises, the counter **1442** continues counting until the MONOS signal reaches the RAF signal. At that point, the counter **1442** stops. The rate at which the capacitor charges is related to the setting of the associated potentiometer. Thus the count that the counter **1442** reaches is determined by the potentiometer setting.

Synchronously with the sequential activation of the output lines **1432**, the register select lines **1434** are activated such that the pot **0** register is selected to input the output of the counter **1442** after the POT **0** line is activated and the output of the counter **1442** is determined by the setting of the potentiometer of the control handle **12***a*. Next, the pot **1** register is selected to input the digital data representing the setting of the potentiometer of the control handle **12***b*, etc.

The CPU may then input this data by sending the corresponding addresses of the potentiometer registers **1424** (Table II) to the address decoder **1404** and pot register address decoder **1426**. Each of the pot **0-3** registers **1424** are connected to the multiplexer **1420** by an 8 bit output line **1444**. The multiplexer **1420** has an input for the line **1415** such that when an address corresponding to one of the pot **0-3** registers **1424** is sent by the CPU to input the data contained by the registers **1424**, the multiplexer **1420** selects the 8 bits of data on the line **1444** from the registers **1424** and conducts them to the data bus **66***d*.

The I/O chip is shown in greater detail in FIGS. **73**A-M with a composite diagram of FIGS. **73**A-M shown in greater detail in FIG. **74**. The microcycle decoder is indicated generally at **1402** in FIG. **73** and comprises 11 bit circuits **1402***a-k* for the address bits

A0–A10, respectively, (with the decoder bit circuit **1402***a* typical of the bits **1402***a–k* shown in greater detail in FIG. **75**). The low address bits A0–A7 are loaded by the bit circuits **1402***a–h* of the microcycle decoder **1402** on the control signal LDL1, with the high address bits A8–A10 loaded on the control signal LDH1 in a manner similar to that for the microcycle decoders of the address and data chips.

The address decoder is indicated generally at **1404** in FIG. **73** and comprises a PLA just as for the address and data chips. The address decoder **1404** decodes the address bits from the microcycle decoder **1402** and activates one of the switch matrix input port select lines SO0–SO7 indicated at **1406**, (each of which is the output of a driver **1704**, shown in greater detail in FIG. **76**) if the corresponding address is present as well as the control signal $\overline{\text{INPUT}}$ on line **1446**. Similarly, the address bits can be decoded to activate the associated music processor output port select lines **1407–1414** if the output control signal $\overline{\text{OUTPUT}}$ on line **1448** is active. All the music processor registers can be loaded with one Z-80 OTIR instruction. The contents of register C should be sent to output port address 18H, register B to 8H and HL should point to the 8 bytes of data. The output lines **1451** are sequentially activated such that the register select lines **1414–1407** are sequentially activated with the data pointed to by HL going to touput port 17H (noise volume register) and the next 7 bytes going to output ports 16H–10H.

The pot register input select line **1415** of the address decoder **1404** is also indicated. The switch input lines SI0–SI7 are indicated generally at **1418** and are operatively connected to the multiplexer indicated generally at **1420**. The gates of the transistor switches which comprise the multiplexer **1420** are connected to the output of an inverter **1450** whose input is connected to the line **1415**. When the logic state of the line **1415** is a logical 1, the pot **0-3** registers **1424** are selected causing output of the inverter **1450** to be a logical 0 which turns off the transistor switches of the multiplexer **1420** thereby turning off the SI0–SI7 inputs.

The pot **0-3** registers are indicated generally at **1424** (with the least significant bit **1424***a* of the pot **0** register tyical of the bits of the registers **1424**, shown in greater detail in FIG. **77**.) The output of each of the potentiometer registers **1424** is connected by the 8-bit output line **1444** to the output of the associated transistor switches of the multiplexer **1420**. The output of the switches of the multiplexer **1420** are also connected to the **2** input of the tri-state buffer indicate generally at **1400** (with unit **1400***a*, typical of the 8 units of the tri-state buffer **1400** shown in greater detail in FIG. **78**) by the I/O chip data bus **66***d*. The input/output terminal **3** of each unit of the tri-state buffer **1400** is connected to the microcycle data bus **66**.

The **1** input of each buffer unit is connected to the output of an inverting gate **1553** (shown in greater detail in FIG. **79**) which has an input line **1555** and an input line **1557**, both from the address decoder **1404**. The line **1555** is activated by addresses 10H–17H (the switch matrix input ports) and the line **1557** is activated by addresses 1CH–1FH (the potentiometer input registers). The activation of either line allows the tri-state buffer **1400** to transmit the data from the switch matrix or the potentiometer registers to the microcycle data bus **66**.

The scan counter is indicated generally at **1428** in FIG. **73** and comprises a 2-bit counter (with the least significant bit **1428***a* shown in greater detail in FIG. **80**). The inputs of the counter **1428** are connected to the output of a flip-flop **1452**, the output of which is connected to an input line **1454** which carries the clock signal. The output of the scan counter **1428** is connected to the scan decoder indicated generally at **1430** which comprises a PLA having four output lines **1432** and four output lines **1434**.

The output lines **1432** are connected to the POT **0**, POT **1**, POT **2** and POT **3** output pins of the I/O chip, respectively, by a buffer **1456** (shown in greater detail in FIG. **81**). Each of the output lines **1434** of the PLA of the decoder **1430** are connected to a register select input **4** of each bit of a register of the pot **0-3** registers **1424**.

As the counter **1428** cycles through its 4 output states (as it is a 2-bit counter) the POT **0-3** lines of the output lines **1432** are sequentially activated. As each output line is activated, a capacitor operatively connected to the potentiometer associated with that particular output line charges at a rate as determined by the setting of the potentiometer. The output of each capacitor is operatively connected to the MONOS input **1658** of the I/O chip which is connected by a resistor **1660** to the input of the comparator **1440**. The comparator **1440** has another input connected to the junction of a voltage divider **1662** which generates the voltage reference signal REF.

The output of the comparator **1440** is connected to the input of a plurality of logic elements indicated at **1664** which includes gates **1666–1669**, with gate **1666**, typical of gates **1666–1669** (shown in greater detail in FIG. **82**). Also included are gates **1670–1672** (with gates **1670** and **1672** shown in greater detail in FIG. **83**.) (The gate **1671** is also logically similar to that shown in FIG. **83**, but VDD and VSS are interchanged.)

The output **4** of the gate **1666** is connected to a stop input **6** of each bit of the counter indicated generally at **1442** (with bit **1442***a* typical of the bits of the counter **1442** shown in greater detail in FIG. **84**). The counter **1442** is clocked by a 2-bit counter **1678** (with bit **0** or **1678***a*, and bit **1**, or **1678***b*, shown in greater detail in FIGS. **85** and **86**, respectively, and buffer **1679** shown in greater detail in FIG. **87**). The counter **1678** has an input for the clock signal Φ from a buffer **1681** (also shown in greater detail in FIG. **87**.) The output of the counter **1678** at the buffer **1568** is the clock signal Φ divided by four. The counter **1442** counts until the MONOS signal reaches that of the REF reference signal such that the count contained within the counter **1442** is proportional to the potentiometer setting of the potentiometer associated with the particular output line of the output lines **1432**.

Synchronously with the activation of the output lines **1432**, the pot register select lines **1434** are sequentially enabled such that pot **0** of the registers **1424** is selected and enabled to latch up the data output of the counter **1442** when the counter **1442** indicates the positional setting of the potentiometer ("pot **0**") associated with control handle **12***a*, etc. Accordingly, the output of each bit of the counter **1442** is connected by the logic gates indicated generally at **1468** to the 1 input of a bit of each register of the potentiometer registers **1424**.

When a particular pot line of the POT0–POT3 lines **1432** is activated, the associated capacitor begins charging until the MONOS signal on the line **1658** reaches the REF voltage as determined by the comparator **1440**. One delay later (gate **1666**), the counter **1442** is stopped. If IORQ is not active, one delay later (gate **1667**) the output lines **1434** of the scan decoder are enabled so that

one of the pot registers **1424**, corresponding to the count of the scan counter **1430**, can latch up the count output of the counter **1442**. One delay later (gate **1671**), the output lines **1432** are turned off. Also one delay after gate **1667** (gate **1668**), the scan counter is incremented and the counter **1442** is reset.

One delay later (gate **1670**), a DISCHARGE signal on a line **1674** (which is the output of a buffer **1676** shown in greater detail in FIG. **88**) discharges the capacitor. When the counter **1442** reaches **64**, one delay later (gate **1670**) the DISCHARGE signal is turned off. Two delays (gates **1669** and **1671**) after the counter **1442** reaches **64**, the POT0-POT3 lines **1432** are enabled so that the particular pot line of the lines **1432** corresponding to the incremented count of the scan counter **1428** is activated to start the cycle all over.

The pot register address decoder is indicated generally at **1426** in FIG. **73** and comprises a PLA having an input line **1415** from the address decoder **1404** and input lines **1469** and **1471** for the address bits A0 and A1, respectively. The CPU can read the contents of any particular potentiometer register **1424** by transmitting the appropriate address to the address decoder which activates the line **1415**. The address bits A0 and A1 come directly from the microcycle decoder **1402** and determine which of the 4 registers, pot **0–3**, is selected.

The $\overline{\text{INPUT}}$ and $\overline{\text{OUTPUT}}$ control signals are generated on the output lines **1446** and **1448**, respectively, of a generator indicated generally at **1680** and includes gates **1682–1686** (and are logically similar to that shown in FIG. **89**). Also included is counter bit **1688** (shown in greater detail in FIG. **86**).

MUSIC PROCESSOR

A block diagram of the music processor of the I/O chip is shown in FIG. **71B** and C. The music processor can be divided into two sections. The first section (shown in FIG. **71B**) generates a master oscillator frequency and the second section (shown in FIG. **71C**) uses the master oscillator frequency to generate tone frequencies and the analog AUDIO output.

The frequency of the master oscillator is determined by the contents of several output registers. The contents of all registers in the music processor are set by output instructions from the CPU.

The master oscillator frequency is a square wave whose frequency is determined by 8 binary inputs to a master oscillator **1470** and a clock signal. This 8 bit input word is the sum of the contents of a master oscillator register **1472** (having address **10H** which activates the register select line **1407**) and the output of a multiplexer **1474**. The multiplexer **1474** is controlled by the output of a one bit multiplexer register **1476** (having address **15H** which activates the register select line **1412**). The addition of the contents of the master oscillator register **1472** and the output of the multiplexer **1474** is performed by an 8 bit adder **1478** which has an 8 bit output connected to the master oscillator **1470**.

If the multiplexer register **1476** contains a logical **0**, then the data from a "vibrato" system, indicated generally at **1480**, will be conducted through the multiplexer **1474**. The 2 bits from a 2-bit vibrato frequency register **1482** (having address **14H**) determined the frequency of the square wave output of a low frequency oscillator **1484**. The output of the low frequency oscillator **1484** is operatively connected to the input of a set of logic gates **1486** represented by an AND gate. The vibrato system **1480** further comprises a 6-bit vibrato register **1488** (also having address **14H**) which is operatively connected by a 6 bit output line to the "AND" gate **1486**. The 6-bit word at the output of the AND gate oscillates between 0 and the contents of the vibrato register **1488** since the contents of the vibrato register **1488** are being "ANDed" with the output of the low frequency oscillator **1484**, with the frequency of oscillation determined by the contents of the vibrato frequency register **1482**. The 6-bit output word of the AND gate **1486**, along with 2 logical **0** bits (when the MUX register **1476** contains a logical **0**) are conducted through the multiplexer **1474** to the 8 bit adder **1478** to be added to the contents of the master oscillator register. This causes the master oscillator frequency to be modulated between two values since the frequency is a function of alternatively the contents of the master oscillator register and the sum of the contents of the master oscillator register and the output of AND gates **1486** thus giving a vibrato effect.

If the multiplexer register **1476** contains a logical **1**, the data from a "noise" system, indicated generally at **1490**, will be conducted through the multiplexer **1474** to the 8-bit adder **1478**. An 8-bit "noise vloume" register **1492** is operatively connected to the input of a set of gates **1494** also represented by an AND gate. An 8-bit noise generator **1496** is also operatively connected to the inputs of the "AND" gate **1494**. The output of the noise generator is an 8-bit word that constantly varies. The gate **1494** functions as 8 AND gates so that each output bit of the noise volume register **1492** is ANDed with an output bit of the noise generator **1496**. Thus the 8 bit output word from the noise volume register determines which bits from the noise generator will be present at the output of the gates **1494**. Accordingly, if a bit in the noise volume register **1492** is 0, the corresponding bit at the output of the gates **1494** will also be 0. If a bit in the noise volume register is 1, the corresponding bit at the output of the AND gate will be a noise bit from the noise generator. This 8 bit word from the gates **1494** is conducted through the multiplexer **1474** (when the multiplexer register **1476** contains a 1) to the 8-bit adder **1478**. Thus, the master oscillator frequency can be modulated by noise. Modulation can be completely disabled by setting the noise volume register **1492** to 0 if noise modulation is being used, or by setting the vibrato register **1488** to 0 when vibrato is used.

In the second part of the music processor shown in FIG. **71C**, the square wave from the master oscillator on the output line **1498** of the master oscillator **1470** (FIG. **71B**) is conducted to the clock input of 3 tone generator circuits, tone generators A, B, and C indicated at **1500**, **1502** and **1504**, respectively, which produce square waves at their outputs. The frequency of the outputs of each tone generator is determined by the contents of an associated tone generator register and the master oscillator frequency. Accordingly, a tone generator "A" register **1506** is connected to the input of the tone generator A, a tone generator "B" register **1508** is connected to the input of the tone generator B and a tone generator "C" register **1510** is connected to the inputs of the tone generator C.

The output of the tone generator A which carries the square wave output is operatively connected to the inputs of a set of gates indicated at **1512** which function as 4 AND gates, with the other 4 inputs of the "AND" gates **1512** operatively connected to the outputs of a tone volume "A" register **1514**. The 4-bit output word of the AND gate **1512** oscillates between 0 and the

contents of the tone volume "A" register **1514** at the frequency of the output of the tone generator A.

Similarly, the output of the tone generator B is operatively connected to the inputs of 4 "AND" gates indicated at **1516** with the other 4 inputs operatively connected to the outputs of a 4-bit tone volume "B" register **1518** and the output of the tone generator C operatively connected to the inputs of 4 "AND" gates **1520** with the other 4 inputs of the AND gates **1520** operatively connected to the outputs of a 4 bit tone volume "C" register **1522**. The four-bit output of each set of AND gates oscillates between 0 and the contents of the associated tone volume register.

The output of the AND gates **1512** is operatively connected to a digital-analog converter **1524** whose output oscillates between ground and a positive analog voltage determined by the contents of the tone volume "A" register **1514** at a frequency determined by the tone generator A. Similarly, the output of the AND gates **1516** are operatively connected to a digital-analog converter **1526** and the outputs of the AND gates **1520** are operatively connected to a digital analog converter **1528**.

A 4th tone generator comprises a set of gates indicated at **1530** which function as 4 AND gates which each have an input operatively connected to a line **1532** which carries a bit from the noise generator **1496** (FIG. **71B**). The output of this bit of the noise generator **1496** is a square wave having a constantly varying frequency. The input **1532** is ANDed with 4 volume bits on lines **1534** from the noise volume register **1492** (FIG. **71B**). The set of AND gates **1530** operate the same way as the AND gates for the tones A–C, except that a noise modulation register **1536** (having address **15H** which activates register select line **1412**) must contain a logical **1** for the outputs of the AND gate **1530** to oscillate.

The outputs of the AND gates **1530** are operatively connected to a digital-analog converter **1538**. The analog outputs of the 4 D-A converters **1524**, **1526**, **1528** and **1538** are summed to produce a single audio output, AUDIO. This output is transmitted to the RF modulator **58** (FIG. **2**).

The master oscillator is indicated generally at **1470** in FIG. **73** and comprises a programmble counter which can count up to FFH from the number presented at its program input. The programmable counter includes 8 units **1542***a–h* (with unit **1542***a*, typical of units **1542***a–g*, shown in greater detail in FIG. **90** and unit **1542***h* shown in greater detail in FIG. **91**) and a PLA indicated generally at **1544**. The units **1542***a–h* have inputs **4** and **5** for the clock signal Φ from the buffer **1681**. The freqency, Fm, of the master oscillator **1470** is a function of the contents of the master oscillator register and the clock signal and is given by the following formula (in the absence of any modulation by the vibrato system **1480** or noise system **1490**):

$$Fm = \frac{1789}{(\text{contents of Master Osc. Reg. } 1472) + 1} \text{ Khz}$$

The master oscillator register is indicated generally at **1472** and comprises 8 bits (with each bit circuit logically similar to that shown in FIG. **75**), each having an input for the register select line **1407**. The output of the master oscillator register **1472** is connected to the inputs of the 8-bit adder indicated at **1478** which comprises 8 bits **1478***a–h*. (Bit **1478***b*, typical of bits **1478***a–g* is shown in greater detail in FIG. **92** with bit **1478***h* shown in greater detail in FIG. **93**) The outputs of the adder are connected to the program inputs **1** of the master oscillator **1470**.

The other inputs of the 8-bit adder **1478** are connected to the outputs of the multiplexer indicated generally at **1474**. The output of the 8 bit adder **1478** is the sum of the contents of the master oscillator register **1472** and the output of the multiplexer **1474**, which determines the frequency of which the master oscillator **1470** oscillates.

The multiplexer **1474** is shown in FIG. **73** to comprise a plurality of transistor switches **1546** and **1547**. The gates of switches **1547** are connected by an inverter **1548** to an input line **1550** with the gates of the switches **1546** connected to the output of the inverter **1548** by an inverter **1549**. The input line **1550** is connected to the output of the multiplexer register **1476** which is bit **4** of the output register having address **15H** shown in FIG. **73** (with bit **4** shown in greater detail in FIG. **75**).

The "AND" gates **1486** are shown to comprise a plurality of NOR gates indicated at **1486** whose inputs are connected to the 6 outputs of the bits **1488***a–f* of the vibrato register **1488** (each bit being logically similar to that shown in FIG. **75**). The vibrato register **1488** is the first 6 bits of the output register having the address **14H** and the register select line **1411**. The last 2 bits **1482***a* and *b* (also shown in greater detail in FIG. **75**) comprise the vibrato frequency register **1482**. The output of the 2 bits **1482***a* and *b* are connected to the inputs of the low frequency oscillator indicated generally at **1484**.

The low frequency oscillator **1484** comprises a 4-to-1 multiplexer in which the outputs from the vibrato frequency register **1482** are connected by a plurality of logic gates **1552** to the gates of four transistor switches **1554** of the multiplexer. The inputs of the transistor switches **1554** are connected to the 4 most significant bits **1556***a–d* of a counter comprising **13** bits **1556***a–m*. (The bit **1556***a*, typical of the bits **1556***a–l*, is shown in greater detail in FIG. **83** with the bit **1556***m* shown in greater detail in FIG. **85**.)

The output of the transistor switches **1554** are connected to one another and to the other inputs of the NOR gates **1486**. The logic state of the bits of the vibrato frequency register **1482** determine which of the outputs of the bits **1556***a–d* are selected which determines the frequency of oscillation of the output of the low frequency oscillator **1484**. The value **00** of the bits of the vibrato frequency register correspond to the lowest frequency and the value **11** corresponds to the highest. When the output of the low frequency oscillator **1484** is a logical **1**, the NOR gates **1486** are each a logical **0**, otherwise the contents of the vibrato frequency register **1482** are inverted and conducted to the multiplexer **1474**. In this manner, the contents of the vibrato register **1488** "ANDed" (negative logic) by the NOR gates **1486** with the output of the low frequency oscillator **1484**.

The set of "AND" gates **1494** are shown to comprise a plurality of NOR gates indicated at **1494** in FIG. **73**. The noise generator comprises a number generator and is indicated generally at **1496**. The number generator comprises a 15-bit shift register **1558** (with each bit logically similar to that shown in FIG. **94**) and an exclusive-OR gate indicated at **1560**. The inputs of the NOR gates **1494** are connected to the outputs of the 8 most significant bits of the shift register **1558**. The output of the two most significant bits are connected to the inputs of the exclusive-OR gate **1560** whose output is con-

nected to the input of the least significant bit of the shift register **1558**. The output of the 8 most significant bits of the shift register **1558** is a binary number that constantly changes with each clock signal to the shift register **1558**. The other inputs of the NOR gates **1494** are connected to the outputs of noise volume register indicated at **1492** (each bit being logically similar to that shown in FIG. **75**) and having an input connected to the register select line **1414**. The shift register **1558** is clocked by a 4 bit counter **1559**, having bits **1559***a–d* and an input connected to the output of the buffer **1679** of the counter **1678**, which also provides the clock signal for counter **1556** of the low frequency oscillator **1484**. (The bit **1559***a* is shown in greater detail in FIG. **85** with bit **1559***b*, typical of the bits **1559***b–d*, shown in greater detail in FIG. **86**.)

If any particular bit of the noise volume register **1492** is a logical **1**, the output of the corresponding NOR gate of the NOR gates **1494** is a logical **0**. Otherwise, the output of the corresponding NOR gate **1494** is the inerse of the associated bit from the noise generator **1496**. In this manner, the output of the noise generator **1496** is "ANDed" (negative logic) with the output of the 8 bits of the noise volume register **1492**. The contents of the multiplexer register **1476** on line **1550** determines whether the multiplexer **1474** conducts the output of the NOR gates **1486** from the vibrato system or the output of the NOR gates **1494** from the noise system, to be summed with the contents of the master oscillator register **1472** by the 8 bit adder **1478**.

The master oscillator **1470** further comprises a plurality of logic elements indicated at **1562** (which include gates **1564** and **1566** which are logically similar to the gates shown in FIG. **82** and a buffer **1568** shown in greater detail in FIG. **87**) having an input connected to the output of the PLA **1544** of the master oscillator **1470**. The outputs of the buffer **1568** are connected to the clock inputs of the tone generators A, B and C, by the lines **1498**. The tone generator "A" register **1506** and the tone generator A are shown to comprise an 8-unit circuit, which include a programmable counter, indicated **1570** (with a unit **1570***a*, typical of the units of the circuit **1570**, with the exception of the unit **1570***b*, shown in greater detail in FIG. **95** and the unit **1570***b* shown in greater detail in FIG. **96**). The frequency of tone A is a function of the master oscillator frequency and the contents of the tone generator A register and is given by the following formula:

$$Fa = \frac{Fm}{2\ (\text{contents of tone gen. } A \text{ reg } 1506)}$$

The output line of the unit **1570***a* of the tone A circuit **1570** is connected to the input of a toggle flip-flop **1572** (shown in greater detail in FIG. **92**) which has an output line **1574** which carries the output of the tone generator A. The tone generator B register **1508** and tone generator B as well as the tone generator C register **1510** and tone generator C are logically similar to the tone A circuit **1570** and toggle flip-flop **1572**. The tone generator B register and tone generator B are indicated generally at the circuit **1576** and toggle flip-flop **1578** with the tone generator C register and tone generator C indicated generally at circuit **1580** an toggle flip-flop **1582**.

The output **1574** of the toggle flip-flop **1572** of the tone generator A is connected to an input of a PLA **1584** which also has inputs connected to the outputs of the tone volume "A" register **1514** (which are the four lower bits of the output register having address **16H** and register select line **1414** with a bit shown in greater detail in FIG. **75**). The PLA **1584** has a plurality of output lines which are connected to a resistor network **1586**, the outputs of which are connected to a single output line **1588** which carries the analog signal AUDIO.

The PLA **1584** includes a plurality of pull-down transistors **1590** which couple each of the output lines of the PLA **1584** to the line **1574** which carries the output of the tone generator A. Thus, the output lines of the PLA **1584** all go to a logical **0** when the line **1574** goes to a logical **1** whereby the output of the PLA **1584** oscillates at the same frequency as the output of the tone generator A. The remaining portion of the PLA **1592** decodes the output of the tone A volume register **1514** to selectively activate one of the output lines of the PLA **1584** (when the line **1574** from the tone generator A register is low). The registor network **1586** produces an analog voltage in dependence upon the particular output line of the PLA **1584** activated.

Since the output of th PLA **1584** goes low each time the line **1574** goes low, the output of the tone A volume register **1514** is in a sense, ANDed with the output of the tone A generator. Thus the "AND" gates **1512** comprise the pull-down transistors **1590**. The D-A converter **1524** (FIG. **71C**) comprises the PLA **1584** and registor network **1586**.

The output of the tone generators B and C are connected in a similar manner to PLAs **1594** and **1596**, respectively. The outputs of each bit of the tone volume B register **1518** (with each bit shown in greater detail in FIG. **75**) are connected to the inputs of the PLA **1594**. The outputs of the tone volume C register **1522** (with each bit also shown in greater detail in FIG. **75**) are connected to the inputs of the PLA **1596**. The outputs of the PLA **1596** and the PLA **1586** are connected to the inputs of the resistor network **1586**.

The output of the most significant bit of the shift register **1558** of the noise generator **1496** is connected to the input of a NOR gate **1598** whose output is connected by an inverter **1600** to a PLA **1602**. The other input of the NOR gate **1598** is connected to the noise modulation register **1536** which is the most significant bit (shown in greater detail in FIG. **75**) of the output register having address **15H** and register select line **1412**. The PLA **1602** has inputs connected to the output of the 4 most significant bits of the noise volume register **1492** and the output of the PLA **1602** is also connected to the registor network **1586**. The set of "AND" gates **1530** comprise the plurality of pull-down transistor **1604** of the PLA **1602** with the digital-analog converter **1538** comprising the remainder of the PLA **1602** and resistor network **1586** in a manner similar to the tone generators. The resistor network **1586** has a common summing point **1540** which is connected to the output line **1588** which carries the analog signal AUDIO. In this manner, the AUDIO signal is the sum of the tones A, B and C, generted by the tone generators A, B and C (at their respective volumes), and the noise generator (at its respective volume).

The LDL1 and LDH1 signals for the microcycle decoder **1402** are generated indicated generally at **1690**. The generator has inputs for the clock signals Φ and Φ and the CPU control signal $\overline{\text{IORQ}}$and outputs **1692** and **1694** for the signals LDL1 and LDH1, respectively. The generator comprises gates **1696** and **1698** (each of which is logically similar to the gate shown in FIG. **82**)

and NOR gate **1700** and **1702**. The address bits A0–A7 are latched up in the microcycle decoder **1402** on the signal LDL1 with the address bits A8–A10 latched on the signal LDH1, just as for the address and data chips.

The video processor allows the easy manipulation of pixel data to be written to the display RAM. With one memory write instruction, pixel data can be taken from the CPU, modified by the video processor and sent to the display RAM. The modifications include expanding, shifting or rotating, flopping, and ORing or exclusive-ORing the pixel data. This allows a greater amount of data to be handled in a given time which in turn allows greater complexity in the games and computer function to be performed.

Furthermore, although only 2 bits of memory space in the display RAM are used to define a pixel on the display screen, the present system allows the associated pixel to be presented in one of 32 colors and one of eight different intensities. Color registers of a greater capacity than 8 bits would provide an even larger selection of colors and intensities.

The colors and intensitis of the entire or portions of the screen may be changed with one instruction without changing the contents of the display RAM by changing the horizontal color boundary. The colors and intensities may also be changed by changing the data in the color registers. The screen interrupt is programmable to allow these registers to be changed after any particular scan line so that 256 color/intensity combinations may be on the screen at one time in any one field of the raster scan.

The music processor is fully digital and adapted to produce a variety of sounds including melodies and noises by loading a plurality of registers. The tones produced can be modulated to produce a vibrato effect or can be modulated by noise.

Since the cassette ROM is removable and replaceable, the programming of the system is easily modified to allow the particular game or function performed to also be changed.

The system has a basic program and each game or function has a separate program. Program listing for the basic program and for a representative game "Gunfight" are disclosed in U.S. Pat. No. 4,301,503 issued Nov. 17, 1981 and such listings are incorporated herein by reference. Each game or function can utilize the basic program routines which include routines for creating screen images including initialization, character display, co-ordinate conversion and object vectoring. Other routines decrement times, play music and produce sounds. There are routines to read the keypad and control handles and input game selections and options. There are also math routines for manipulating floating binary coded decimal (BCD) numbers.

A "flow chart" for the power up sequence is given below in Table IV:

TABLE IV

POWER UP SEQUENCE	
Disable interrupts	
Set CONSUMER/COMMERCIAL port to CONSUMER	
IF	Address 2000H=C3H
	Jump to address 2000H
ENDIF	
Clear all system RAM	
Clear shifter	
Set timout count to max	
Clear music ports	
Set vertical blank	
Set interrupt mode	

TABLE IV-continued

POWER UP SEQUENCE	
Set horizontal color boundary	
Set color ports	
Activate system interrupt routine	
IF	Address 2000H=55H
	Menu Inx ← Cassette menu
ELSE	
	Menu Inx ← On board menu
ENDIF	
Call system menu routine	

A flow chart describing the sequence performed to allow the user to select a game from the "menu" is set out in Table V below:

TABLE V

SYSTEM MENU ROUTINE	
	Clear Screen
	Paint Banner
	Display 'SELECT GAME' on banner
	Line number ← 1
Display line:	Display line number at screen (character 1, line number)
	Display '—' at screen (character 2, line number)
	Display title (menu inx) at screen (character 3, line number)
	Line number ← line number+1
	Menu inx ← menu inx+1
	IF title (menu inx) ≠ zero
	Go to display line
	ENDIF
Wait:	Call system get number routine
	IF number = 0 or number ≧ line number
	Display '?' at screen (character 1, line 11)
	Go to wait
	ENDIF
	Go to game (number)

Finally, a flow chart outlining the program for the "Gunfight" game is set out in Table VI:

TABLE VI

	Get Max. Score
	Clear Ram
	Set vertical blank, horz. color boundary, interrupt mode
	Set colors
	Play Streets of Laredo
STRND:	Start round
	Init Bullets and timers
	Set up screen
	Display scores
	Display "Get Ready"
	Put up proper number of Cacti, Trees & Wagon
	Set up vectors so cowboys walk out
	Start interrupts
	Pause until cowboys walk out
	Erase "Get Ready"
LOOP:	Call sentry (check for a change of input)
	Call DOIT
	If bullet hit anything
	kill object and set death flag if cowboy killed
	Go to LOOP
	DOIT:
	If time up for round
	Exit
	Go to STRND
	Else
	If Death Flag SET
	Exit
	Go to STRND
	Else
	If Player 1 or Player 2 Pot moved
	Update new arm angle
	Else
	If Player 1 or Player 2 Joystick moved
	Update new velocity

TABLE VI-continued

```
Else
If key depressed
Coffee break
Else
If Player 1 or Player 2 trigger pulled
Fire Bullet
Else
If 1 second has elapsed
Update new time
ENDIF
Exit
Interrupt Routine:
Bump all time bases
Erase all active bullets
Vector bullets
Write bullets to new location
Set each bullets hit flag if it hit something
Erase next object in write QUEUE
Vector that object
Write that object to new location
Put object back in QUEUE
SCHED next interrupt
Exit
```

It should be noted that the computer or processor may form a part of the video processor and/or a part of the music processor so that the video processor and/or music processor may stand alone, with only minimal instructions from a central processor. This likewise may be employed for input/output processors. Thus, the term "computer" as used herein, together with its associated hardware, may be in the video, music and/or input/output processors. The so-called intelligence of the system may thus be split or divided between the individual processors and the central processor.

It will, of course, be understood that modifications of the present invention, in its various aspects, will be apparent to those skilled in the art, some being apparent only after study, and others being matters of routine electronic and logic design. As such, the scope of the invention should not be limited by the particular embodiment and specific construction herein described, but should be defined only by the appended claims, and equivalents thereof.

Various features of the invention are set forth in the following claims.

What is claimed is:

1. A computer system for use with a display for presentation of movable symbols, and for providing associated audio signals comprising

generating means for generating digital control signals an for generating digital output signals representative of said movable symbols;

means for presentation of movable symbols on the display responsive to the digital output signals;

a clock generator for generating a clock signal responsive to the digital control signals; and,

a music processor, including a programmable tone generator means, operatively connected to the clock generator for receiving the clock signal, for generating an oscillating signal, and a programming register, operatively connected to the programmable tone generator means, for storing a first binary number wherein the frequency of oscillation of the oscillating signal of the programmable tone generator means is a function of the first binary number and the clock signal.

2. The system of claim 1 wherein the tone generator comprises a digital programmable counter, having a programming input, an output, and a clock input, the clock input operatively connected to the clock generator, for generating an oscillating signal at the counter output, and wherein the programming register is operatively connected to the programming input of the counter.

3. The system of claim 2 wherein the music processor further has volume register means for storing a binary number representing the volume of the music processor, switching means, having inputs operatively connected to the volume register means and to the output of the counter, and having an output, said switching means for providing, at the output, digital signals alternatively corresponding to the binary number of the volume register means and a second binary number, and a digital-to-analog converter, operatively connected to the switching means, for converting the output signals of the switching means to an oscillating analog signal.

4. The system of claim 3 wherein the second binary number is 0.

5. The system of claim 3 wherein the volume register means is operatively coupled to the generating means for receiving from the generating means the binary number representing the volume of the music processor.

6. The system of claim 3 wherein the switching means switches between the binary number of the volume register and the second binary number at the frequency of oscillation of the counter output.

7. The system of claim 2 further comprising a second clock generator for generating a second clock signal, and wherein the first clock generator comprises a second digital programmable counter having a clock input operatively connected to the second clock generator for receiving the second clock signal, the programmable counter also having programming input, and an output operatively connected to the clock input of the first counter, and further comprises a second register operatively connected to the programming input of the second counter, for storing a third binary number wherein the frequency of oscillation of the second counter output is a function of the third binary number and the second clock signal, and the frequency of oscillation of the first counter output is a function of the output of the second counter and the first binary number.

8. The system of claim 7 wherein the music processor further comprises a vibrato system comprising:

a counter having a clock signal input and a plurality of outputs;

a multiplexer having a plurality of inputs selectively connected to the vibrato system counter outputs, a select input, and an output;

a third register, having an output operatively connected to the select input of the multiplexer, for storing a fourth binary number wherein the frequency of oscillation of the multiplexer output is a function of the vibrato system counter clock signal and the fourth binary number;

the vibrato system further comprises a fourth register for storing a fifth binary number, and switching means, having inputs operatively connected to the fourth register and to the output of the multiplexer and having an output, for providing, at the output, digital signals alternatively corresponding to a sixth binary number and the fifth binary number;

the music processor further comprising means having inputs operatively connected to the output of the vibrato system switching means and the second register, and having an output operatively connected to the programming input of the second

programmable counter, for adding the third binary number to the output of the vibrato system switching means so that the frequency of oscillation of the second programmable counter output is a function alternatively of the sum of the third and sixth binary numbers and of the sum of the third and fifth binary numbers.

9. The system of claim **8** wherein the sixth binary number is 0.

10. The system of claim **8** wherein the vibrato system switching means switches between the sixth binary number and the fifth binary number at the frequency of oscillation of the multiplex output.

11. The system of claim **7** wherein the music processor further comprises a noise system comprising a digital number generator having outputs for generating a continuously varying digital signal representing continuously varying binary numbers;

a fifth register for storing a seventh binary number, and conducting means, having inputs operatively connected to the outputs of the number generator and the fifth register and having an output, for conducting selected random number signals to the output determined by the seventh binary number;

the music processor further comprising means, having inputs operatively connected to the noise system conducting means output and the second register, and having an output operatively connected to the programming input of the second programmable counter, for adding the third binary number to the output of the noise system conducting means so that the frequency of oscillation of the second programmable counter output is a function of the output of the adding means which varies continuously.

12. The system of claim **11** wherein the fifth register is operatively coupled to the generating means for receiving the seventh binary number from the generating means.

13. A system for providing a display signal to a raster scan display for displaying thereon a matrix of discrete picture elements, each picture element being defined as a line segment of a horizontal line on the display, and for providing associated audio signals, the system comprising:

a random access display memory having a unique storage location for each discrete picture element of the display for storage of digital memory data signals representative of the picture elements of the display;

a processor comprising means for receiving a plurality of groups of picture element signals, each picture element signal comprising a memory address signal and a memory data signal which together correspond to one particular picture element of the display, each group of picture element signals corresponding to a plurality of picture elements representing a symbol located at a predetermined location on the display, said processor generating control signals;

first addressing means for sequentially and repetitively addressing the storage locations of the display memory, reading the memory data signasl stored therein, and supplying the display signal to the display for displaying thereon the picture elements representative of the memory data signals stored in the display memory;

video processing means operatively coupled to the processsor for receiving therefrom both said picture element signals and said control signals, said control signals activating the video processing means for transforming a group of picture element signals to produce a transformed group of picture element signals so that a symbol as displayed on the display corresponding to the transformed group of picture element signals is different than a symbol as displayed on the display corresponding to the original group of picture element signals; and

transfer means for transferring picture element signals from the video processing means to the display memory whereby memory data signals corresponding to said picture element signals are stored in memory locations of the display memory as determined by the memory address signals corresponding to said picture element signals, said transfer means for transferring the transformed group of picture element signals from the video processing means to the display memory without processing the transformed group of picture element signals with the processor;

a clock generator for generating a clock signal responsive to the control signals; and

a music processor, including a programmable tone generator means, operatively connected to the clock generator for receiving the clock signals, for generating an oscillating signal, and a programming register, operatively connected to the programmable tone generator means, for storing a first binary number wherein the frequency of oscillation of the oscillating signal of the programmable tone generator means is a function of the first binary number and the clock signal.

14. The system of claim **13** wherein the tone generator means comprises a digital programmable counter, having a programming input, an output, and a clock input, the clock input operatively connected to the clock generator, for generating an oscillating signal at the counter output, and wherein the programming register is operatively connected to the programming input of the counter.

15. The system of claim **14** wherein the music processor further has volume register means for storing a binary number representing the volume of the music processor, switching means, having inputs operatively connected to the volume register means and to the output of the counter, and having an output, said switching means for providing, at the output, digital signals alternatively corresponding to the binary number of the volume register means and a second binary number, and a digital-to-analog converter, operatively connected to the switch means, for converting the output signals of the switching means to an oscillating analog signal.

16. The system of claim **15** wherein the volume register means is operatively coupled to the processor for receiving from the processor the binary number representing the volume of the music processor.

17. The system of claim **15** wherein the second binary number is 0.

18. The system of claim **15** wherein the switching means switches between the binary number of the volume register and the second binary number at the frequency of oscillation of the counter output.

19. The system of claim **14** further comprising a second clock generator for generating a second clock signal, and wherein the first clock generator comprises a second digital programmable counter having a clock

input operatively connected to the second clock generator for receiving the second clock signal the programmable counter also having a programming input, and an output operatively connected to the clock input of the first counter, and further comprises a second register operatively connected to the programming input of the second counter, for storing a third binary number wherein the frequency of oscillation of the second counter output is a function of the third binary number and the second clock signal, and the frequency of oscillation of the first counter output is a function of the output of the second counter and the first binary number.

20. The system of claim **19** wherein the music processor further comprises a vibrato system comprising:

a counter having a clock signal input and a plurality of outputs;

a multiplexer having a plurality of inputs selectively connected to the vibrato system counter outputs, a select input, and an output;

a third register, having an output operatively connected to the select input of the multiplexer, for storing a fourth binary number wherein the frequency of oscillation of the multiplexer output is a function of the vibrato system counter clock signal and the fourth binary number;

the vibrato system further comprises a fourth register for storing a fifth binary number, and switching means, having inputs operatively connected to the fourth register and to the output of the multiplexer and having an output, for providing, at the output, digital signals alternatively corresponding to a sixth binary number and the fifth binary number;

the music processor further comprising means having inputs operatively connected to the output of the vibrato system switching means and the second register, and having an output operatively connected to the programming input of the second programmable counter, for adding the third binary number to the output of the vibrato system switching means so that the frequency of oscillation of the second programmable counter output is a function alternatively of the sum of the third and sixth binary numbers and of the sum of the third and fifth binary numbers.

21. The system of claim **20** wherein the sixth binary number is 0 .

22. The system of claim **20** wherein the vibrato system switching means switches between the sixth binary number and the fifth binary number at the frequency of oscillation of the multiplex output.

23. The system of claim **19** wherein the music processor further comprises a noise system comprising a digital number generator having outputs for generating a continuously varying digital signal representing continuously varying binary numbers;

a fifth register for storing a seventh binary number, and conducting means, having inputs operatively connected to the outputs of the number generator and the fifth register and having an output, for conducting selected random number signals to the output determined by the seventh binary number;

the music processor further comprising means, having inputs operatively connected to the noise system conducting means output and the second register, and having an output operatively connected to the programming input of the second programmable counter, for adding the third binary number to the output of the noise system conducting means so that the frequency of oscillation of the second programmable counter output is a function of the output of the adding means which varies continuously.

24. the system of claim **23** wherein the fifth register is operatively coupled to the processor for receiving the seventh binary number from the processor.

* * * * *