FIELD SERVICE MANUAL

400-800 HOME COMPUTER

ATARI®

ATARI, Incorporated
June 1982

ATARI HOME COMPUTER

FIELD SERVICE MANUAL

400/800

TABLE OF CONTENTS

Section	Title	Page
	INTRODUCTION	ix
1	THEORY OF OPERATION	1-1
	Overview	1-1
	User Interface	1-2
	400/800 Mechanical Description	1-3
	Motherboard	1-4
	Central Processing Unit	1-5
	ROM Personality PCB	1-5
	RAM PCB	1-5
	Keyboard	1-6
	Power Supply	1-6
	Program Cartridge	1-6
	400/800 Electronic Discussion	1-7
	Central Processing Unit	1-7
	CPU 6502 Integrated Circuit	1-7
	Alphanumerical Television Interface Controller	1-8
	Color Television Interface Adaptor	1-10
	Graphic Television Interface Adaptor	1-10
	I/O Decoder	1-10
	Composite Video	1-10
	Motherboard Console - 400	1-11
	Pot Keyboard Integrated	1-11
	Peripheral Interface Adaptor	1-11
	Key-In Key-Out Integrated Circuit	1-12
	Memory Map Decoder	1-12
	I/O Decoder	1-13
	Motherboard Console - 800	1-14
	Bi-directional Data Buffer	1-14
	ROM Personality Board	1-15
	Power Supply	1-16
	ROM Cartridge	1-17
	Accessories	1-17
	AC Power Adaptor	1-17
	TV Switch Box	1-17
	'BASIC' Program Cartridge	1-17
2	SILKSCREEN AND SCHEMATICS	2-1
3	TROUBLESHOOTING AND TESTING	3-1
	Overview	3-1
	Tests	3-1
	Equipment Needed	3-1
	Testing With and Without the SALT II Cartridge	3-2

TABLE OF CONTENTS (Cont)

Section	Title	Page
	Overview of Tests	3-2
	Power-Up Test	3-2
	Keyboard Test	3-2
	RAM and ROM Test	3-2
	SALT II Menu	3-5
	Color Bar Test	3-6
	Any Video Test	3-7
	Gray Bar Test	3-8
	Keyboard Test	3-9
	Switch Test	3-9
	Tone Test	3-9
	Display Options	3-10
	Port Test	3-10
	Verify ROM Test	3-11
	RAM Test	3-12
	M Test	3-15
	Star Raider™ Test	3-16
	Shake Test	3-16
	Burnin	3-16
	Description of the Other Functions	3-17
	Production Test	3-17
	Boot B	3-17
	Examine	3-17
	Adjust	3-17
	Summary	3-17
4	DISASSEMBLY/ASSEMBLY MAINTENANCE	4-1
	ATARI 400 Home Computer Console - Disassembly	4-1
	Keyboard and Power Supply Access	4-1
	Keyboard Removal	4-3
	Power Supply Removal	4-4
	CPU, RAM and Motherboard Access	4-6
	CPU and RAM Removal	4-6
	ATARI 800 Home Computer Console - Disassembly	4-8
	Access to RAM Boards and ROM Board	4-8
	Access to Power Supply and Keyboard Assembly	4-9
	Remove Top Cover	4-9
	Remove the PCB Module	4-10
	Remove the Power Supply	4-11
	Access to CPU Printed Circuit Board	4-12
	Access to Motherboard	4-13
	Keyboard Removal	4-14

TABLE OF CONTENTS (Cont)

Section	Title	Page
	ATARI 400 Home Computer Console - Assembly	4-15
	Module Assembly Reassembly	4-15
	Keyboard Installation	4-16
	Power Supply Installation	4-16
	Top Cover Installation	4-17
	ATARI 800 Home Computer Console - Assembly	4-17
	Keyboard Assembly	4-17
	Motherboard Installation	4-17
	CPU PCB Installation	4-18
	Power Supply Installation	4-18
	Module Assembly Installation into Top Cover	4-19
	Bottom Cover Installation	4-19
	RAM and ROM Installation	4-20
	Cartridge Door Assembly	4-20
	PCB Contact Cleaning and Lubricating	4-20
	Tools Required	4-20
	Procedure	4-21
	Visual Inspection	4-21
5	400 DIAGNOSTIC FLOWCHARTS	5-1
6	400/800 SYMPTOM CHECKLIST	6-1
7	800 DIAGOSTIC FLOWCHARTS	7-1
8	GAME CONTROLLERS	8-1
	Joystick (X-Y Controller)	8-1
	Joystick (X-Y Controller) Check	8-3
	Equipment Needed	8-3
	Procedure	8-3
	Game Paddle	8-4
	Game Paddle Controller Check	8-5
	Equipment Needed	8-5
	Procedure	8-5
9	PARTS LIST	9-1
	400 Computer	9-2
	800 Computer	9-7
10	SERVICE BULLETINS	10-1

LIST OF ILLUSTRATION

Figure	Title	Page
1-1	ATARI 400 Home Computer Console	1-1
1-2	ATARI 800 Home Computer Console	1-2
1-3	MPU Pin Assignments	1-8
1-4	ANTIC Pin Assignments	1-9
1-5	CTIA/GTIA Pin Assignments	1-10
1-6	POKEY Pin Assignments	1-11
1-7	PIA Pin Assignments	1-12
1-8	400 Motherboard Flow Diagram	1-18
1-9	400 Power Supply	1-19
1-10	800 Motherboard Flow Diagram	1-20
1-11	800 Power Supply Flow Diagram	1-21
1-12	800 Personality Board	1-22
1-13	CPU Board Flow Diagram	1-23
1-14	8K Dynamic RAM Flow Diagram	1-24
1-15	16K Dynamic RAM Flow Diagram	1-25
1-16	Game Cartridge Flow Diagram	1-26
1-17	ATARI Home Computer System Block Diagram	1-27
2-1	400 Motherboard Silkscreen	2-3
2-2	400 Motherboard Schematic	2-4
2-3	400 Power Supply Silkscreen	2-6
2-4	400 Power Supply Schematic	2-7
2-5	800 Motherboard Silkscreen	2-9
2-6	800 Motherboard Schematic	2-10
2-7	800 Power Supply Silkscreen	2-12
2-8	800 Power Supply Schematic	2-13
2-9	800 Personality Board Silkscreen	2-14
2-10	800 Personality Board Schematic	2-15
2-11	CPU Board Silkscreen	2-16
2-12	CPU Board Schematic	2-17
2-13	8K RAM Board Silkscreen	2-18
2-14	8K RAM Board Schematic	2-19
2-15	16K RAM Board Silkscreen	2-20
2-16	16K RAM Board Schematic	2-21
3-1	Special Graphics Test	3-3
3-2	SALT Header	3-4
3-3	SALT II Menu	3-5
3-4	Color Bar Test Screen	3-6
3-5	Any Video Test Screen	3-7
3-6	Gray Bar Test Screen	3-8
3-7	Port Test Screen	3-10
3-8	RAM TEST Screen	3-13

LIST OF ILLUSTRATION (Cont)

Figure	Title	Page
4-1	ATARI 400 Console, Bottom Cover Screw Location	4-2
4-2	ATARI 400 Console, Top Cover Removal	4-3
4-3	ATARI 400 Console, Keyboard Removal	4-4
4-4	ATARI 400 Console, Power Supply Removal	4-5
4-5	ATARI 400 Console, Module Assembly	4-7
4-6	ATARI 800 Console, Cartridge Door - Assembly Removal	4-9
4-7	ATARI 800 Console, Bottom Cover Removal	4-10
4-8	ATARI 800 Console, Module Assembly Removal	4-11
4-9	ATARI 800 Console, Power Supply Removal	4-12
4-10	ATARI 800 Console, CPU Printed Circuit - Board Removal	4-13
4-11	ATARI 800 Console, Motherboard Removal	4-15
4-12	ATARI 800 Console, Keyboard Removal	4-15
5-1	Keyboard Connection Chart	5-38
5-2	Defective RAM Boards	5-39
7-1	Keyboard Connection Chart	7-38
7-2	Defective RAM Boards	7-39
8-1	Joystick (X-Y Controller)	8-2
8-2	Joystick Schematic	8-3
8-3	Game Paddle	8-4
8-4	Game Paddle Schematic	8-5

LIST OF TABLES

Table	Title	Page
1-1	Memory Map Selected Lines	1-13
1-2	I/O Decoder Select Line	1-14
3-1	Port Test Legend	3-12
3-2	Defective RAM Boards	3-14
3-3	Defective RAM Identified	3-15
5-1	Clock Circuit	5-36
5-2	Defective RAM Boards	5-39
5-3	Port Test Legend	5-40
7-1	Clock Circuit	7-36
7-2	Defective RAM Boards	7-39
7-3	Port Test Legend	7-40

INTRODUCTION

The ATARI 400/800 Home Computer™ Field Service Manual is organized in 10 Sections:

1 **THEORY OF OPERATION** - overview of how the 400 and 800 Home Computers work.

2 **SILKSCREENS AND SCHEMATICS** - electrical layouts and drawings for major components.

3 **TESTING AND TROUBLESHOOTING** - overview of tests which assist in diagnosing malfunctions.

4 **DISASSEMBLY/ASSEMBLY** - detailed instructions to completely disassemble and assemble both units.

5 **400 DIAGNOSTIC FLOWCHARTS** - detailed procedures for troubleshooting and repairing the 400 Computer.

6 **400/800 SYMPTOM CHECKLIST** - quick reference for troubleshooting each computer.

7 **800 DIAGNOSTIC FLOWCHART** - detailed procedures for troubleshooting and repairing the 800 Computer.

8 **GAME CONTROLLERS** - overview of hand controller construction and recommended test procedures.

9 **PARTS LIST** - detailed breakdown of all parts used in each unit.

10 **SERVICE BULLETINS** - section to be used to hold Field Change Orders, Upgrade Bulletins, and Tech Tips.

This manual is designed for use by both the experienced and inexperienced service technician. The Diagnostic Flowcharts (Sections 5 and 7) provide detailed diagnostics and repair procedures for technicians not completely familiar with the ATARI 400/800 Home Computers. The Symptom Checklist (Section 6) provides a rapid repair reference for the more experienced technician.

SECTION I

THEORY OF OPERATION

OVERVIEW

The Atari 400 Computer Home Console contains the central processor unit (CPU) and memory in the form of the Operating System (read-only-memory (ROM)) and 8K or 16K of user programmable random access memory (RAM). The console contains the keyboard, cartridge slot, controller jacks, and serial input/output (I/O) port for connecting peripheral devices (see Figure 1-1).

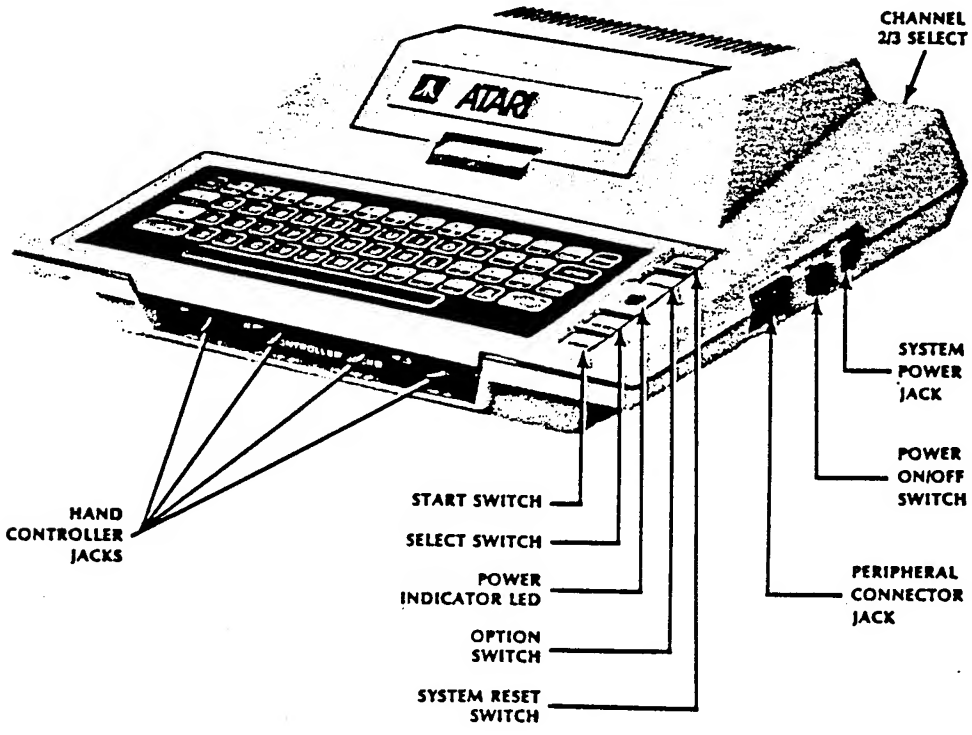

Figure 1-1. ATARI 400 Home Computer Console

The ATARI 800 Home Computer Console contains the CPU and memory in the form of the Operating System (10K of read-only-memory (ROM)) and 8K to 16K (standard) of user programmable random access memory (RAM); plus two expansion sockets for additional RAM modules (maximum 48K). The console also contains the keyboard, cartridge slots (2), controller jacks and a serial I/O port for connecting peripheral devices (see Figure 1-2).

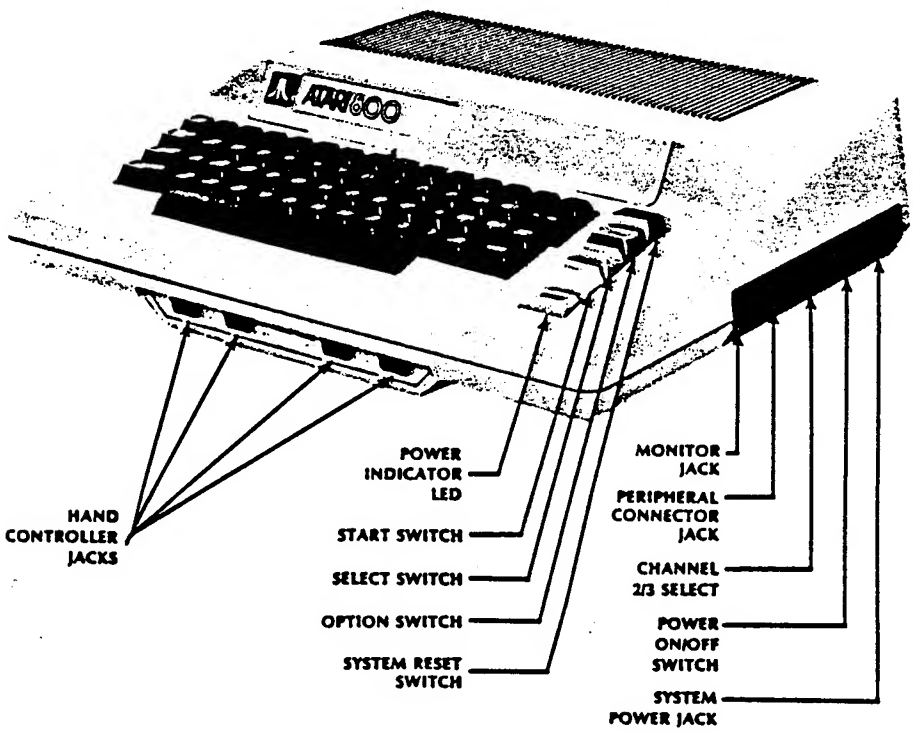

Figure 1-2. ATARI 800 Home Computer Console

USER INTERFACE

The ATARI 400/800 Home Computer Consoles are general purpose microcomputers using the 6502 microprocessor. The ATARI 400/800 Consoles are the central processing units for their respective systems. Each console comes standard with a built-in typewriter style keyboard, 8K/16K of RAM, ROM operating systems, connector jacks for adding peripherals and hand controllers, and a 15-foot Radio Frequency (RF) cable for connection to the user's television set.

The controller jacks on the front of both consoles accepts the X-Y (joystick) and paddle hand controllers available from ATARI.

The right side panel of the Atari 400 Computer Console contains a peripheral jack, power ON/OFF switch, and a power jack. The channel 2/3 switch is located on the back of the console. This switch changes the console transmission frequency to either channel 2 or channel 3 (refer to Figure 1-1).

The right side panel of the Atari 800 Home Console contains a monitor jack, a peripheral jack, a channel 2/3 switch, a power ON/OFF switch, and a power jack (refer to Figure 1-2).

Both Console keyboards provide a full alphanumeric character set, cursor controls, and special purpose keys. The alpha keys when used in conjunction with the Control (CTRL) key become special graphic symbols. To the right of the keyboard is the power ON light and four special control keys (refer to Figure 1-1 and Figure 1-2). From the top to the bottom they are:

SYSTEM RESET - Interrupts whatever the computer is doing and restarts the Operating System or Program Cartridge.

OPTION - Interrupt used by the Program Cartridge to choose among the variations within a game or program.

SELECT - Interrupt used to select one of several games or programs on the Program Cartridge.

START - Interrupt used to Start the game or program selected from the Program Cartridge.

400/800 MECHANICAL DESCRIPTION

The Atari 400/800 Computer Home Consoles are made up of seven major functional modules they are:

- Motherboard
- Central Processing Unit (CPU) Printed Circuit Board
- ROM Personality Printed Circuit Board (Operation System) (800 Only)
- RAM Printed Circuit Board(s)
- Keyboard
- Power Supply Board
- Program Cartridge

The Printed Circuit Boards (PCBs) plug into sockets on the motherboard, using a common Address Bus, Data Bus and clock lines. The various power requirements are routed from the power supply through the motherboard to all printed circuit boards.

The keyboard connects directly to the motherboard through a ribbon connector. The sixteen-line Address Bus allows the microprocessor to directly address 64K of memory. The eight-line Data Bus provides the communication and data path between the functional modules.

Figures 1-8 thru 1-17 at the end of this section provide function block diagrams of PCBs in the 400/800 systems.

Motherboard

The motherboard ties all components of the computer system together. It also performs a variety of logic functions. All PCBs and connector cables plug into the motherboard and allow communication between the functional blocks of the 400 and 800 Computer Consoles. The motherboard also performs the following:

- Generates a 3.58 MHz master clock for the Central Processing Unit's PCB.
- Generates the Power-ON RESET for the Central Processing Unit PCB and the peripherals.
- Provides the driving circuitry for the Key-Press signal from the Central Processing Unit PCB to the Console speaker.
- Converts signals from the various hand controllers into recognizable data for the microprocessor.
- Buffers and drives the data lines between the Central Processing Unit PCB, the RAM PCBs, and the remainder of the system.
- Does the first memory map decoding of the possible 64K address locations into 8K blocks for the microprocessor.
- Generates control signals for the peripheral devices.
- Receives video data from the Central Processing Unit PCB, converts it into a composite video and routes it to the power supply PCB.
- Combines the sound from the Computer system and the audio track of prerecorded cassettes.
- Develops the sound subcarrier for the television audio as part of the composite video.

Central Processing Unit

The Central Processing Unit (CPU) PCB is the controller of the entire Console system. The CPU PCB contains the 6502 microprocessor, and the ANTIC and CTIA (or GTIA) chips. The CPU PCB controls the Console system and its peripheral devices through address lines (to select which device it needs to communicate with) and data lines (to transmit and/or receive data from a selected device) common to the entire system. Operating instructions for the microprocessor come from the ROM Operating System on the Personality PCB. Additional functions of the CPU PCB are:

- Receives the master clock from the motherboard and generates Phase 1 (Ø1 or Ph 1) and Phase 2 (Ø2 or Ph 2) clocks used to synchronize the entire system.
- Transmits a REFRESH signal at least every 2 miliseconds to refresh the dynamic RAM chips on the RAM PCB(s).
- Receives the four TRIGGER lines from the fire button on each of the hand controller accessories.
- Receives the lines from the four control switches located to the right of the keyboard.
- Generates video signals to be processed by the motherboard before they are sent to the RF module on the Power Supply PCB.

ROM Personality PCB

The ROM Personality PCB contains information in Read-Only Memory (ROM), the program of operating instructions for the microprocessor. Two 4K ROMs contain the Operating System, and one 2K ROM contains the arithmatic functions used for BASIC programming. Information is retrieved from the ROMs by addressing a particular location on the ROM using the Address Bus. The data contained at that location is placed on the Data Bus to be read by the microprocessor.

The ROM Personality PCB also provides the CHIP SELECT signals used to select LSI chips throughout the Console system and for the bi-directional data buffers on the motherboard.

RAM PCB

The Random Access Memory (RAM) PCB performs the function of temporary data storage for the system. The RAM is dynamic, requiring REFRESH, and is available in 8K or 16K versions.

Each RAM chip on the RAM PCB has only seven address lines. To address 16K locations requires 14 address lines. To accomplish this, a 14-bit address is

sent to the address demultiplexer, which first passes the lower seven bits to the RAM chips as a Row Address. After an appropriate delay, the highest seven bits are passed as a Column Address. Data is then either put into or taken out of the location selected. The direction of data flow is determined by the Read/Write line.

REFRESH occurs at least every two milliseconds. The REFRESH signal is generated on the CPU Board.

Keyboard

The typewriter-style keyboard is used to generate alphanumeric characters as well as special graphic symbols. The keyboard allows the operator to communicate with the console system for writing programs or responding to preprogrammed cassettes or cartridges. The keyboard consists of 57 normally open switches. The switches are scanned at a rapid rate and when a switch is found closed, that scan pattern is sent to the Pot Keyboard Integrated Circuit (POKEY) for encoding.

Power Supply

The Power Supply PCB receives 9VAC from an external power adaptor (transformer) and provides +5Vdc, +12Vdc, and -5Vdc for the Console system. The Power ON/OFF switch is mounted on the Power Supply PCB and removes input power by opening the 9Vac lines. An interlock switch breaks power to the system when the operator opens the top panel of the Console to install or remove Program Cartridges.

The RF Module resides on the Power Supply PCB. The RF Module generates the RF output for the video screen from the composite video signals received from the motherboard, and is switchable to television channel 2 or 3.

Voltages:

+5Vdc A - Supply voltage for the logic PCBs.

+5Vdc B - Specially filtered for the video circuitry.

+12Vdc and -5Vdc - Supply voltage for the dynamic RAM chips.

Program Cartridge

The Program Cartridge permanently stores the microprocessor instructions for a particular application. It consists of two 4K ROM chips mounted on the enclosed PCB. Information is received from the ROM chips by addressing the memory locations assigned to the Program Cartridge slot(s). Data in the memory locations is then placed on the Data Bus lines.

400/800 ELECTRONIC DISCUSSION

The remainder of this section provides a detailed discussion of the functions of the seven major modules.

Central Processing Unit

The Central Processing Unit (CPU) PCB contains the 6502 CPU (or MPU) chip (A303), the CTIA or GTIA chip (A301), the ANTIC chip (A302), tri-level address buffers (Z303 and Z304), and the clock generator (Z302A and Z302B).

CPU 6502 Integrated Circuit

The 6502 microprocessor contains register flags, interconnections, arithmetic logic, and control logic, all recognized operation codes. The characteristics of the 6502 microprocessor are:

- Byte-oriented structure
- 151 opcodes
- Decimal and binary arithmetic modes
- Seven addressing modes
- True indexing
- Stack pointer
- Two interrupt levels
- 64K address range
- Integral clock circuit
- Single +5 volt dc power requirement

Figure 1-3 is an illustration of the 6502 pin assignments. The functions of the pins are explained on the following pages.

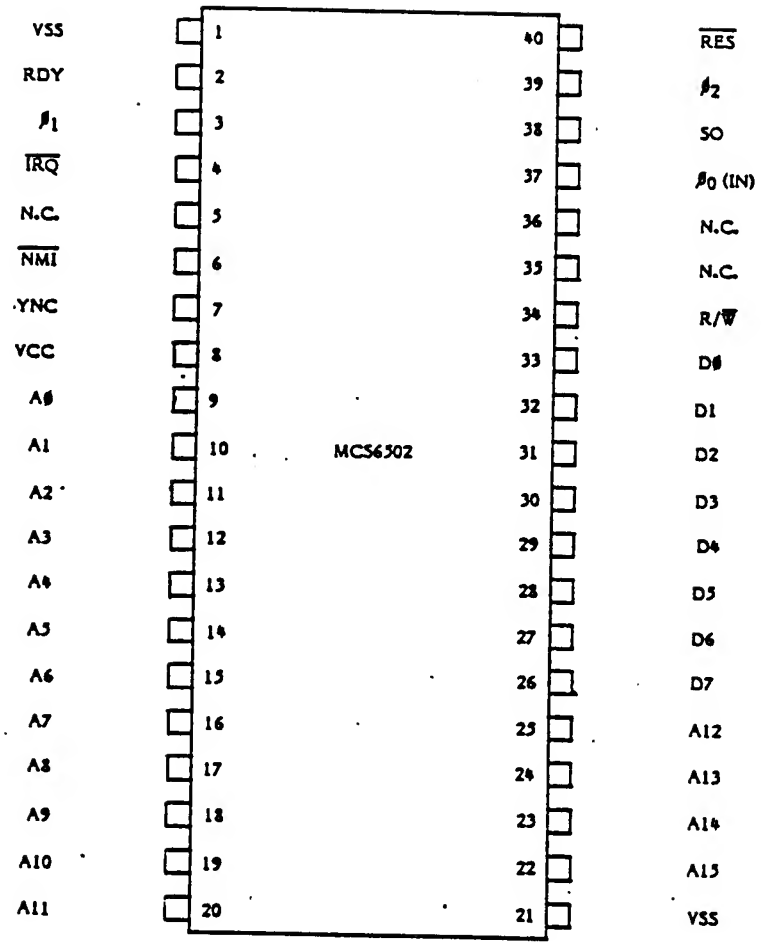

Figure 1-3. MPU Pin Assignments

Alphanumeric Television Interface Controller

The primary function of the Alphanumeric Television Interface Controller (ANTIC) chip is to fetch data from memory, independent of the processor, for display on the video screen.

Figure 1-4 is an illustration of ANTIC Pin Assignments.

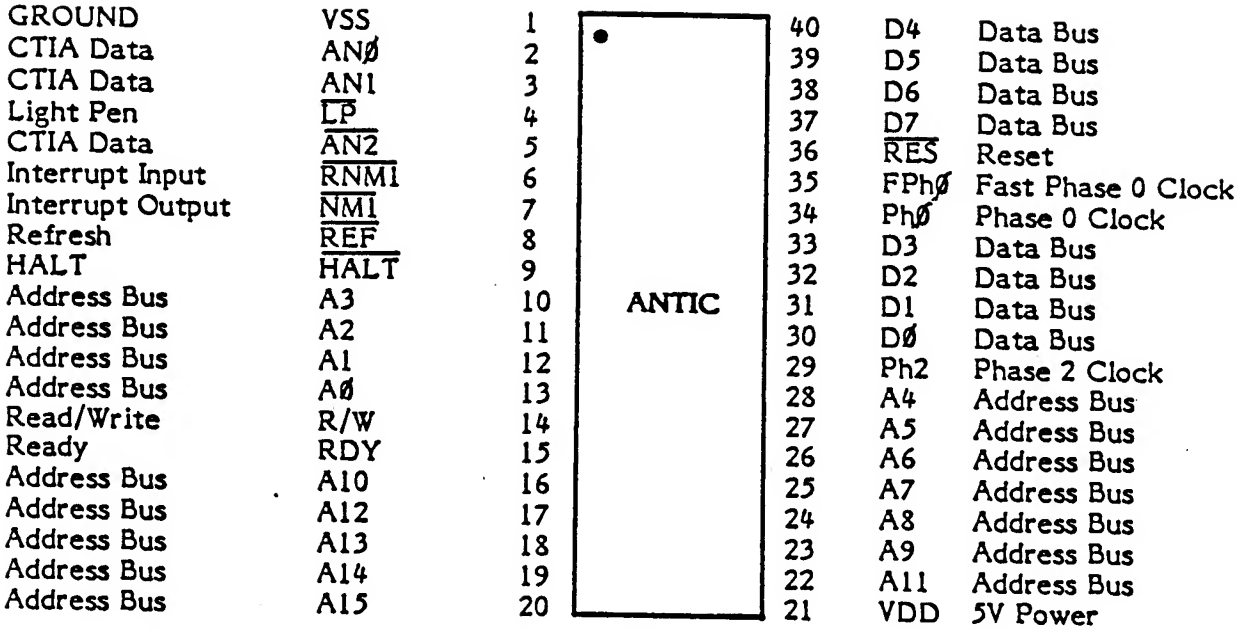

Figure 1-4. ANTIC Pin Assignments

Color Television Interface Adaptor

The Color Television Interface Adaptor (CTIA) chip retrieves graphics data from memory via the ANTIC DMA process. This data is routed to the CTIA graphics registers. Figure 1-5 illustrates the pin assignments for the CTIA and GTIA.

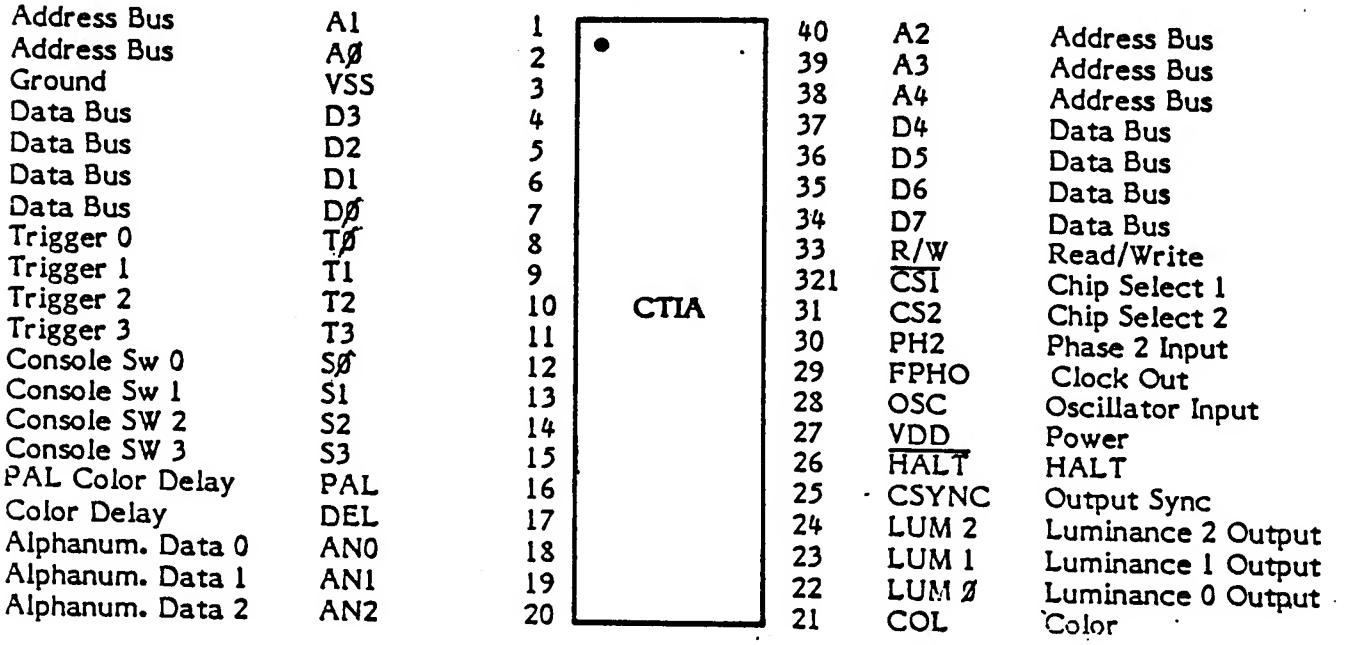

Figure 1-5. CTIA/GTIA Pin Assignments

Graphics Television Interface Adaptor

The Graphic Television Interface Adaptor (GTIA) is an extended capabilities version of the CTIA, having additional high-resolution modes.

I/O Decoder

The I/O Decoder integrated circuit (Z101) is a one-eight decoder demultiplexer. The I/O Decoder is the same in the 400 and 800, but is labeled Z101 in the 800 Console and Z105 in the 400 Console.

Composite Video

The 400 and 800 Motherboards route the Composite video signals (COMP CHROMA, COMP LUM, MOD, and COMP VIDEO) to the Power Supply to build the RF video output.

Motherboard Console - 400

The 400 Console Motherboard contains the Pot Keyboard (POKEY) (A101) chip , the Peripheral Interface Adaptor chip (PIA) (A102), the ROM Personality chips (A103 thru A105), the Keyboard Key-In/Key-Out analog multiplexers, the Memory Map Decoder (Z103), the controller jacks (J101 thru J104), the CPU connector jack (J110), the Keyboard connector jack, RAM connectors and Cartridge connectors.

Pot Keyboard Integrated Circuit

The Pot Keyboard Integrated Circuit (POKEY) provides the interface between the Keyboard, the Serial I/O ports, and the microprocessor. It also contains four semi-independent audio channels, each with its own frequency, noise, and volume control. Figure 1-6 shows the pin assignments of the POKEY.

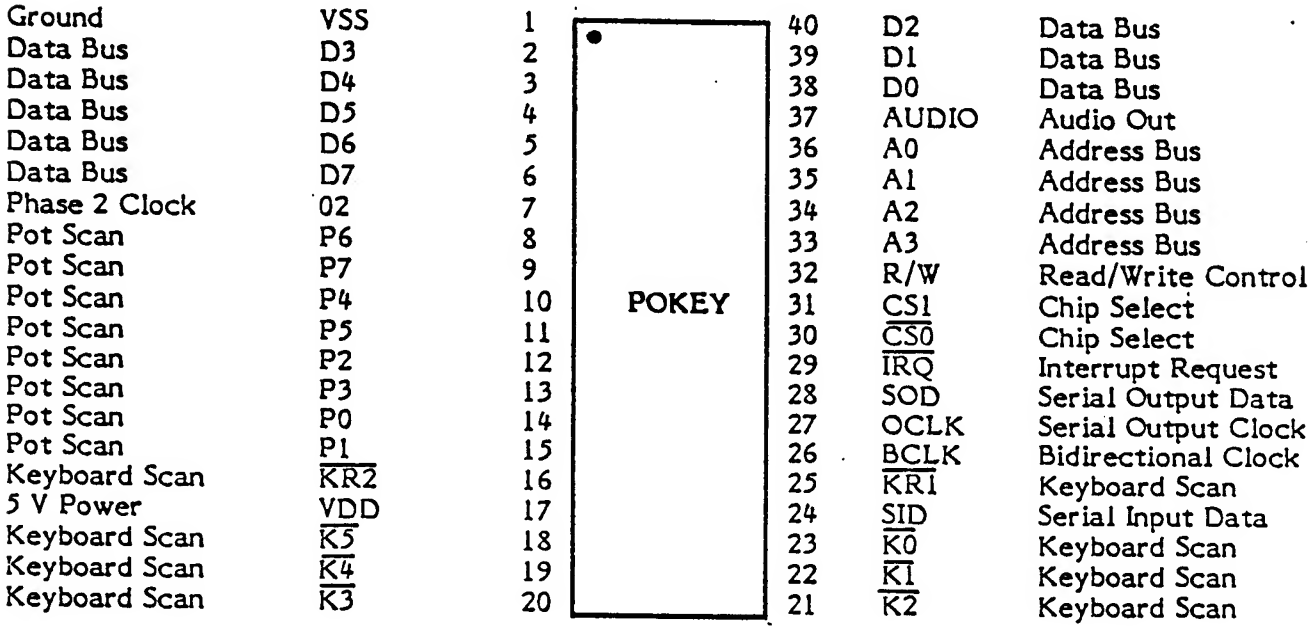

Figure 1-6. POKEY Pin Assignments

Peripheral Interface Adaptor

The Peripheral Interface Adaptor (PIA) (6520) has two 8-bit programmable I/O ports and two control bits for each port, for a total of ten lines per port. Figure 1-7 shows the pin assignments of the PIA.

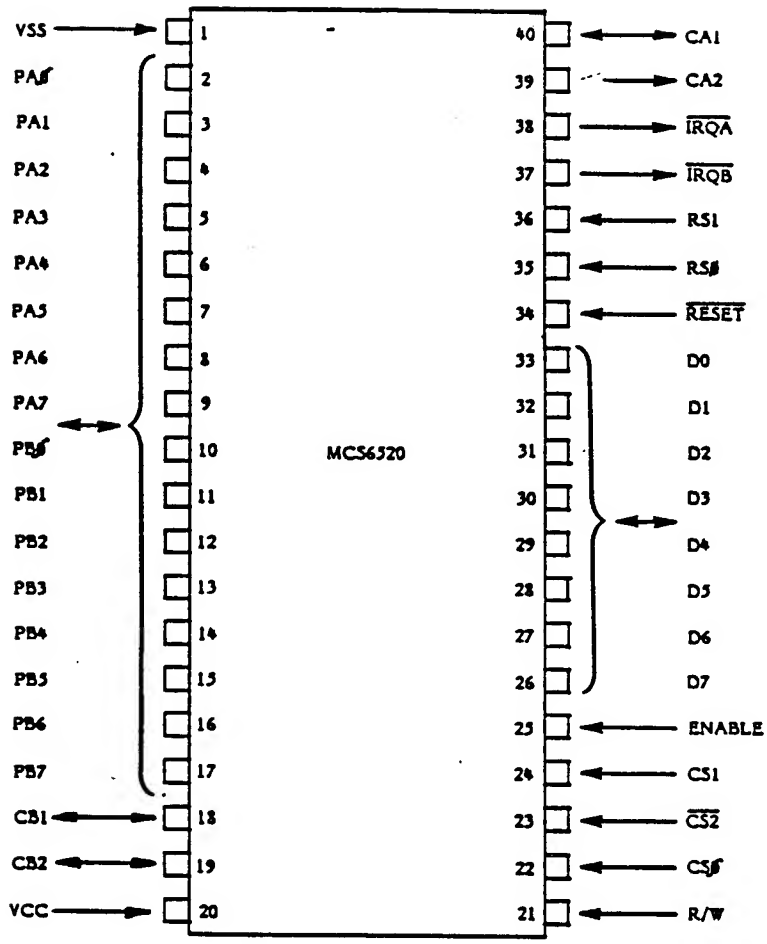

Figure 1-7. PIA Pin Assignments

Key-In Key-Out Integrated Circuits

These two 4051 (Z101 and Z102) integrated circuits are used to scan the Keyboard for input data on the 400 and 800 Computer Consoles. The 4051 integrated circuits are analog multiplexers controlled by the input lines A, B, C and X.

Memory Map Decoder

The Memory Map Decoder integrated circuit (Z103) on the 400/800 Motherboard is a one-of-ten decoder. Four input lines (pins 12, 13, and 14, and 15) determine which output line is selected. The 400/800 Computer Console uses only three of the input lines (pins 13, 14, and 15 and pin 12 being grounded) for a total of eight selected output lines (SO -S7). Refer to Table 1-1 for the line selected for each input combination.

Table 1-1

Memory Map Selected Lines

Signal - Grd	A15	A14	A13	Active	
Pin - 12	13	14	15	Line	Device
L	L	L	L	1 - SO	8K RAM BLOCK
L	L	L	H	2 - S1	8K RAM BLOCK
L	L	H	L	3 - S2	8K RAM BLOCK
L	L	H	H	4 - S3	8K RAM BLOCK
L	H	L	L	5 - S4	8K RAM/CARTRIDGE L,R
L	H	L	H	6 - S5	8K RAM/CARTRIDGE L
L	H	H	L	7 - S6	2K ROM
L	H	H	L	7 - S6	I/O DECODER (Z105)
L	H	H	H	9 - S7	4K ROMs (2-"E" & "A")

I/O Decoder

The I/O Decoder integrated circuit (Z105) is a one-of-eight decoder/demultiplexer. The I/O Decoder is used to select the different output devices, such as PIA chip, POKEY chip and the CTIA/GTIA chip. Only four of the possible output selections are used. (See Table 1-2.) The I/O Decoder is enabled by inputs on pins 4, 5, and 6; pin 4 input coming from the Memory Map Decoder (S6), pin 5 input coming from the Address Bus and pin 6 input coming from the Chip Select (CS) line. The Binary Decode is provided by the Address Bus (A08, A09 and A10).

Table 1-2

I/O Decoder Select Line

Pin	Enable A12 6	Enable A11 6	Enable S6 4	Binary Decode A10 3	Binary Decode A59 2	Binary Decode A8 1	Active Pin	Device Selected
	H	L	L	L	L	L	YO - 15	CTIA
	H	L	L	L	L	H	—— 14	Not used
	H	L	L	L	H	L	Y2 -13	POKEY
	H	L	L	L	H	H	Y3 -12	PIA
	H	L	L	H	L	L	—— 11	Not Used
	H	L	L	H	L	H	Y5 -10	External Select
							—— 9	Not Used
							—— 7	Not Used

Motherboard Console - 800

Read descriptions provided in Motherboard Console - 400, for items similar in both the 400 and 800 Console Motherboards. The following paragraphs describe those items unique to the 800 Console Motherboard.

The 800 Console Motherboard contains the POKEY chip (A101), the PIA chip (A102), the Keyboard Key-In/Key-Out analog multiplexers (Z103 and Z104), the I/O Decoder (Z101), Bi-directional Data Buffers (Z105 and Z106), the controller jacks (J101 thru J104), the Keyboard connector jack (J106), the left and right Program Cartridge jacks (J108 and J109), the CPU connector jack (J101), the ROM Personality connector jack (J107), and the RAM Memory connector jacks (J102, J103, and J104). See Figures 1-11 and 1-12.

Bi-directional Data Buffer

The Bi-directional Data Buffers (Z105 and Z106) are 74LS243 quad transceivers, commonly referred to as tri-level buffers. Tri-level refers to the three levels that can occur in the device; the first level pin 1 going high and pin 13 staying low, allows data to flow through the data buffer in the direction of the CPU; the second level, pin 13 going high and pin 1 staying low, allows data to flow through the data buffer in the direction of the POKEY chip, the PIA chip and the Personality PCB; the third level, with pin 1 and pin 13 both staying low, creates a high impedance condition in the data buffers and allows other devices to transmit data on the Data Bus lines. This high impedance state also isolates the CPU and the RAM PCB from noise generated from a device using the Data Bus lines.

ROM Personality Board

The ROM Personality printed circuit board plugs into connector Jack J107 and occupies memory locations D800 thru FFFF. The Personality board contains the operating system on three ROM chips, two 4K chips and one 2K chip (see Figures 1-13 and 1-14). The two 4K ROM chips (A401 and A403) contain the I/O subsystem, interrupt processing, initialization Power-Up and Reset. The 2K ROM chip (A402) contains the floating point arithmetic package.

- I/O Subsystem

  The I/O subsystem contained in the ROM Operating System provides a high-level interface between the user programs and the Console and peripheral hardware. All peripheral devices capable of dealing with character data have symbolic names (such as K, D, P, E) and may be accessed using a Central I/O (CIO) routine.

- Interrupt Processing

  All hardware interrupts are handled by the interrupt subsystem in the Operating System. Vectored addresses contained in RAM memory point to subroutines in ROM to handle each type of interrupt.

- Initialization

  There are two levels of initialization provided by the system, Power-Up and Reset. Power-Up initialization is performed each time the system power is turned on, and Reset initialization is performed each time the Reset key is pressed.

  Whenever the system power is turned on, the Operating System examines and notes the configuration of the unit. The Operating System performs the following actions at Power-Up:

  - Determines the highest available RAM address
  - Clears all RAM to zeroes
  - Establishes all RAM interrupt vectors
  - Initializes the ROM Cartridges
  - Sets-up the video screen (24 x 40 text mode)
  - Boots the cassette if desired
  - Checks ROM Cartridge for disk boot instructions
  - Boots the disk if desired and a disk drive is attached
  - Transfers control to the ROM cartridge, and booted program

Whenever the Reset key is pressed, the Operating System performs some, but not all, of the functions performed at Power-Up. The Operating System performs the following actions after the Reset key is pressed:

- Clears the Operating System portion of RAM memory
- Re-establishes all RAM interrupt vectors
- Formats the Handler Address table
- Initializes the ROM Cartridges
- Sets-Up the video screen for 24 x 40 text mode
- Transfers control to the ROM Cartridge and booted program

The remaining 2K of Operating System ROM is a floating point program which is not used by the other parts of the Operating System itself, but is available to non-resident programs such as BASIC, Calculator, PASCAL, etc. The following routines are among those found in the ROM program:

- ASCII to floating point and floating point to ASCII conversion
- Integer to floating point and floating point to integer conversion
- Floating point log, exponent, and ploynomial evaluation
- Floating point number clear, load, store and move

POWER SUPPLY

The 400 and 800 Power Supply have identical circuitry, with a few exceptions (See Figures 1-9 and 1-11). The Console Power Supplies receive 9Vac (J204 and J206, 400 and 800 respectively) from the external power adaptor (transformer) provides +5Vdc, and +12Vdc, and -5Vdc for the Console. Both the 400 and 800 Power Supplies have two power ON/OFF switches, S202 and S203 for the 400 Console, and S201 and S202 for the 800 Console. S202 and S201, respectively, are Power Interlock switches.

The RF signal is generated in both the 400 and 800 Power Supplies from the MOD signal received from the motherboard. It is routed through the A203 RF Module to develop the RF output through J203.

A peripheral connector jack, J202 for the 400 Console and J204 for the 800 Console, provides the serial data-in/data-out port for the system. Devices are "daisy chained" together from this output port. Each peripheral device is identified by a unique address, enabling all devices to reside on one output port.

Also contained on the 800 Power Supply board is the Monitor connector jack (J205). Present at J205 are the composite video signals to drive a video monitor. The 800 Power Supply board also contains switches S204 thru S207. These switches are the System Reset, Option, Select, and Start, respectively.

ROM CARTRIDGE

The Atari ROM Program Cartridge contains two ROM chips designed to provide a specific program application (See Figure 1-16). The 6502 microprocessor reads the information contained within the ROM chips by addressing memory locations 8000 thru BFFF Hex. When the ROM Program Cartridges are inserted in the motherboard, they disable the RAM address locations 8000 thru BFFF, in 8K increments. The left ROM Cartridge overlays memory locations A000 to BFFF, and the right ROM Cartridge overlays locations 8000 to 9FFF.

ACCESSORIES

AC Power Adaptor

The AC Power Adaptor plugs into a standard wall outlet to provide the 9Vac used by the Consoles. The other end of the power adaptor plugs into the power jack on either Console.

TV Switch Box

The TV Switch Box allows the Console to be connected to the 300 ohm RF antenna or 75 ohm cable inputs on a typical televison set.

'BASIC' Program Cartridge

The 'BASIC' Program Cartridge (provided) is a standard feature for both Consoles and contains the ATARI BASIC Interpreter.

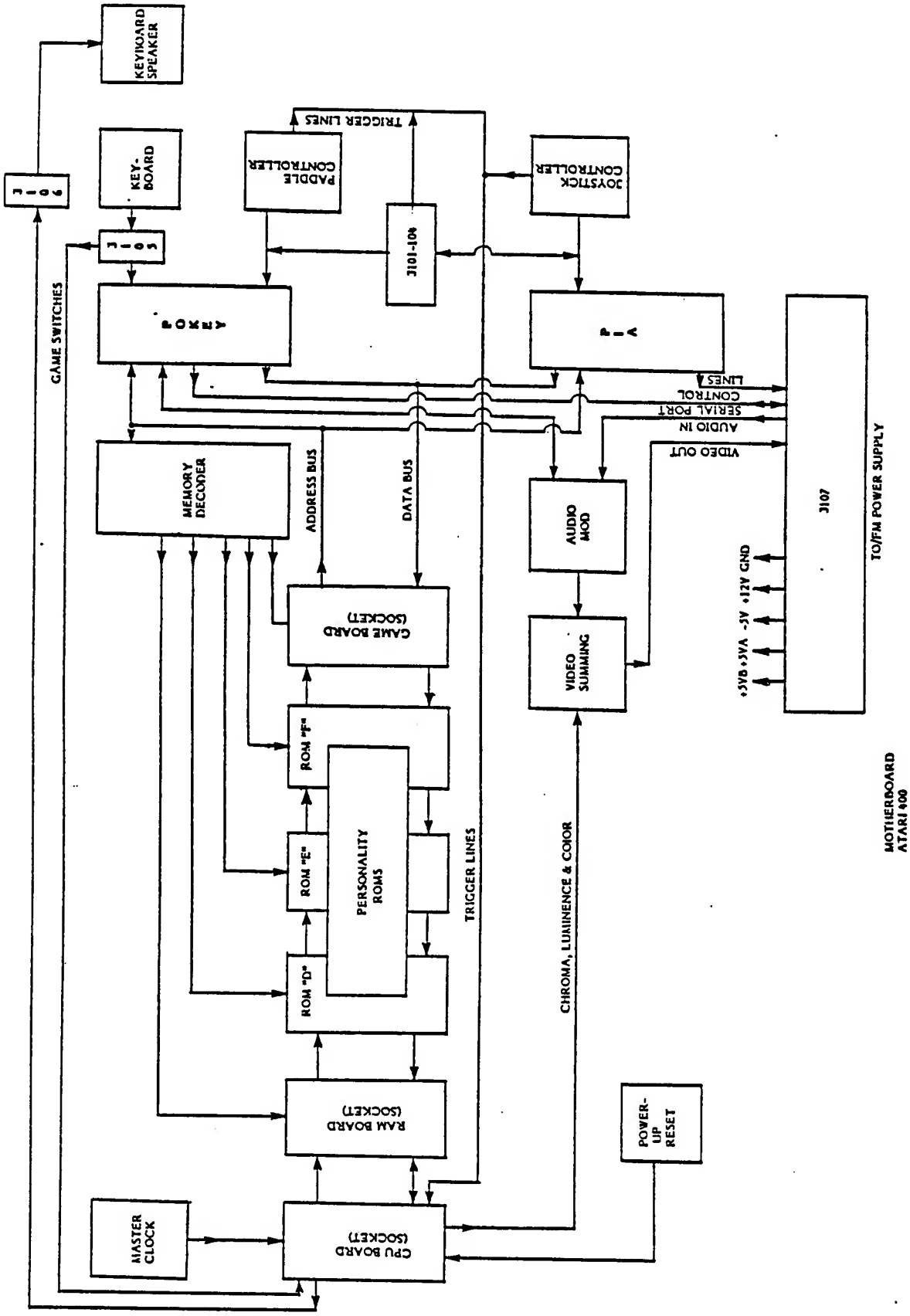

Figure 1-8. 400 Motherboard Flow Diagram

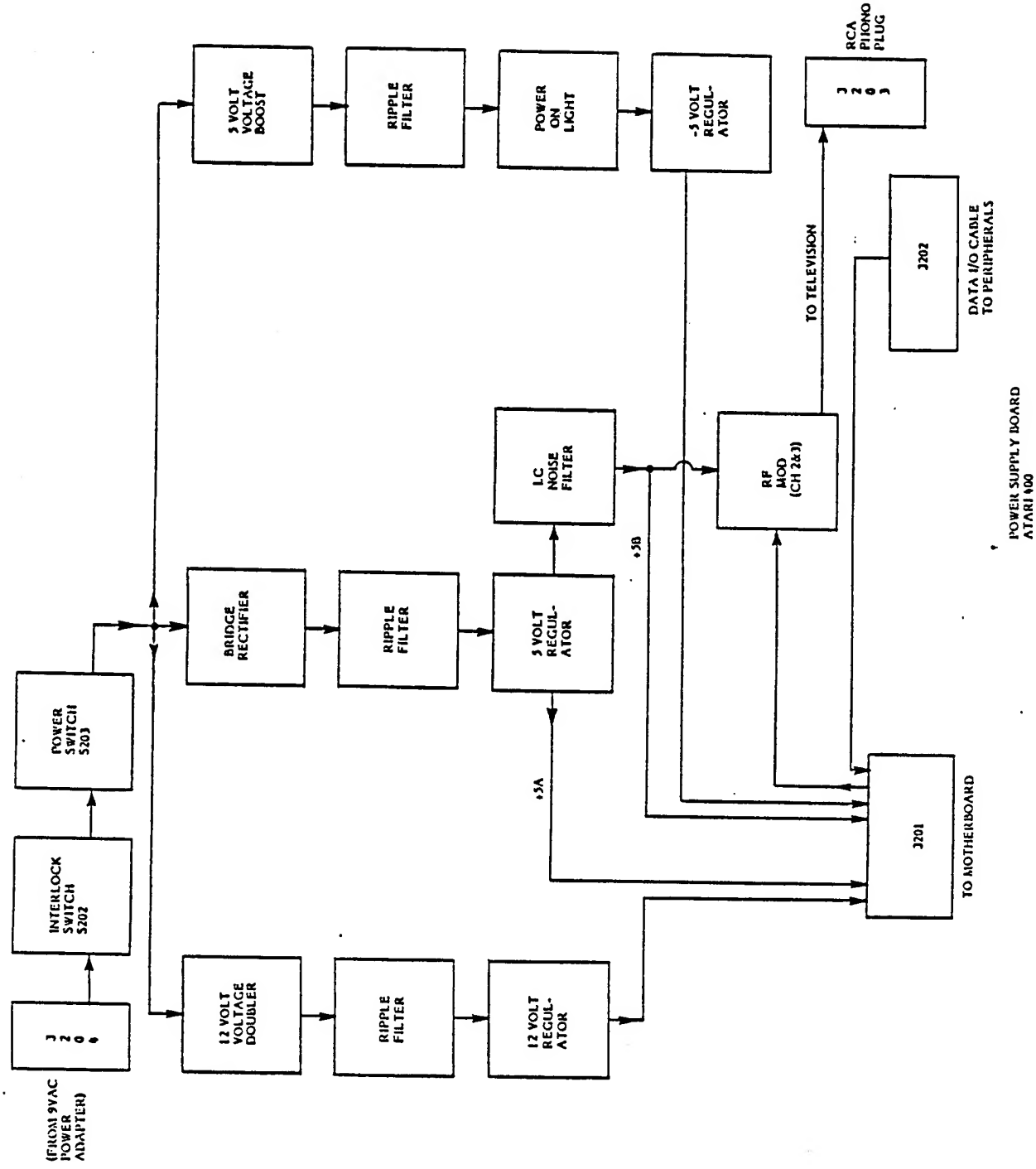

Figure 1-9. 400 Power Supply

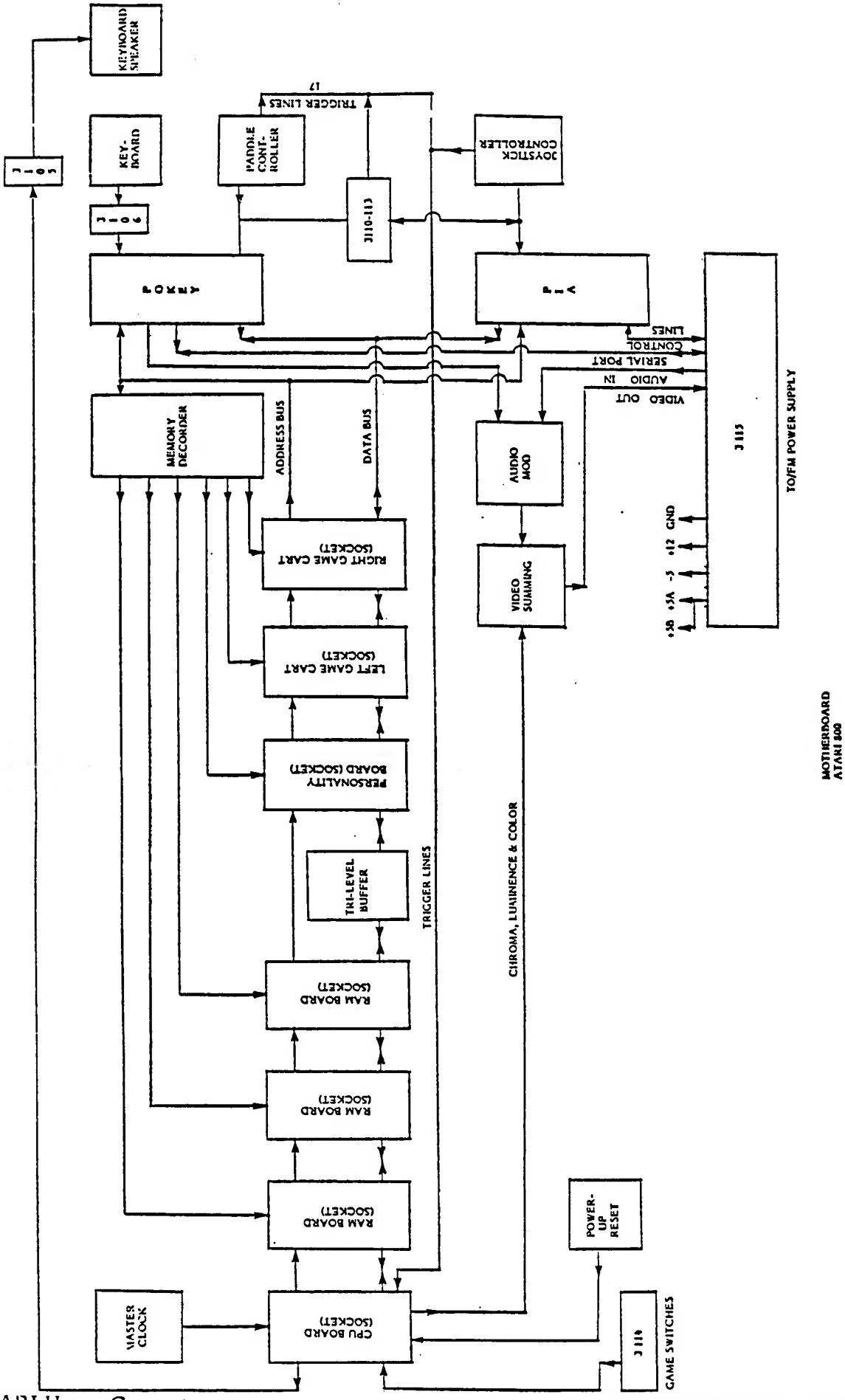

Figure 1-10. 800 Motherboard Flow Diagram

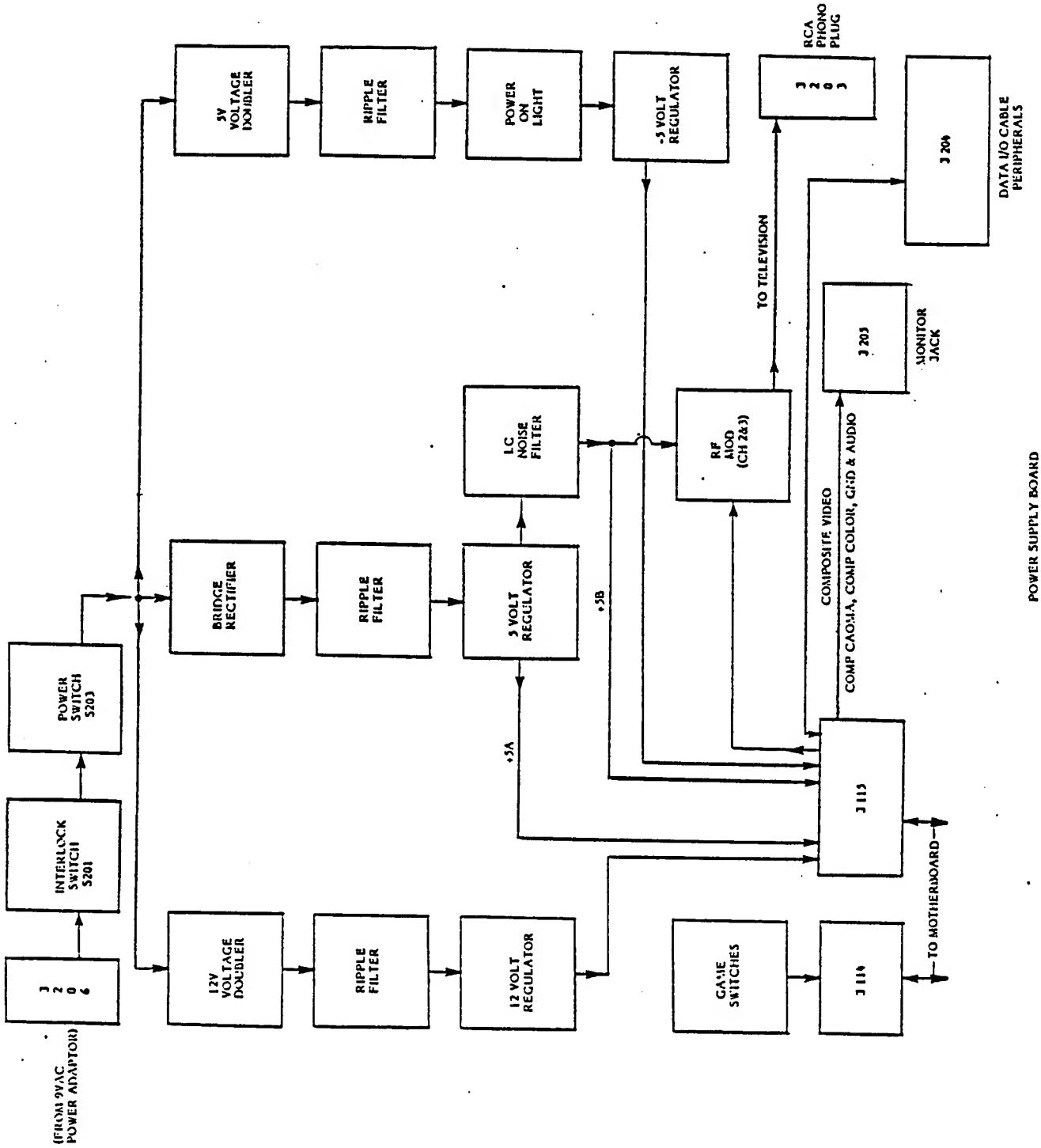

Figure 1-11. 800 Power Supply Flow Diagram

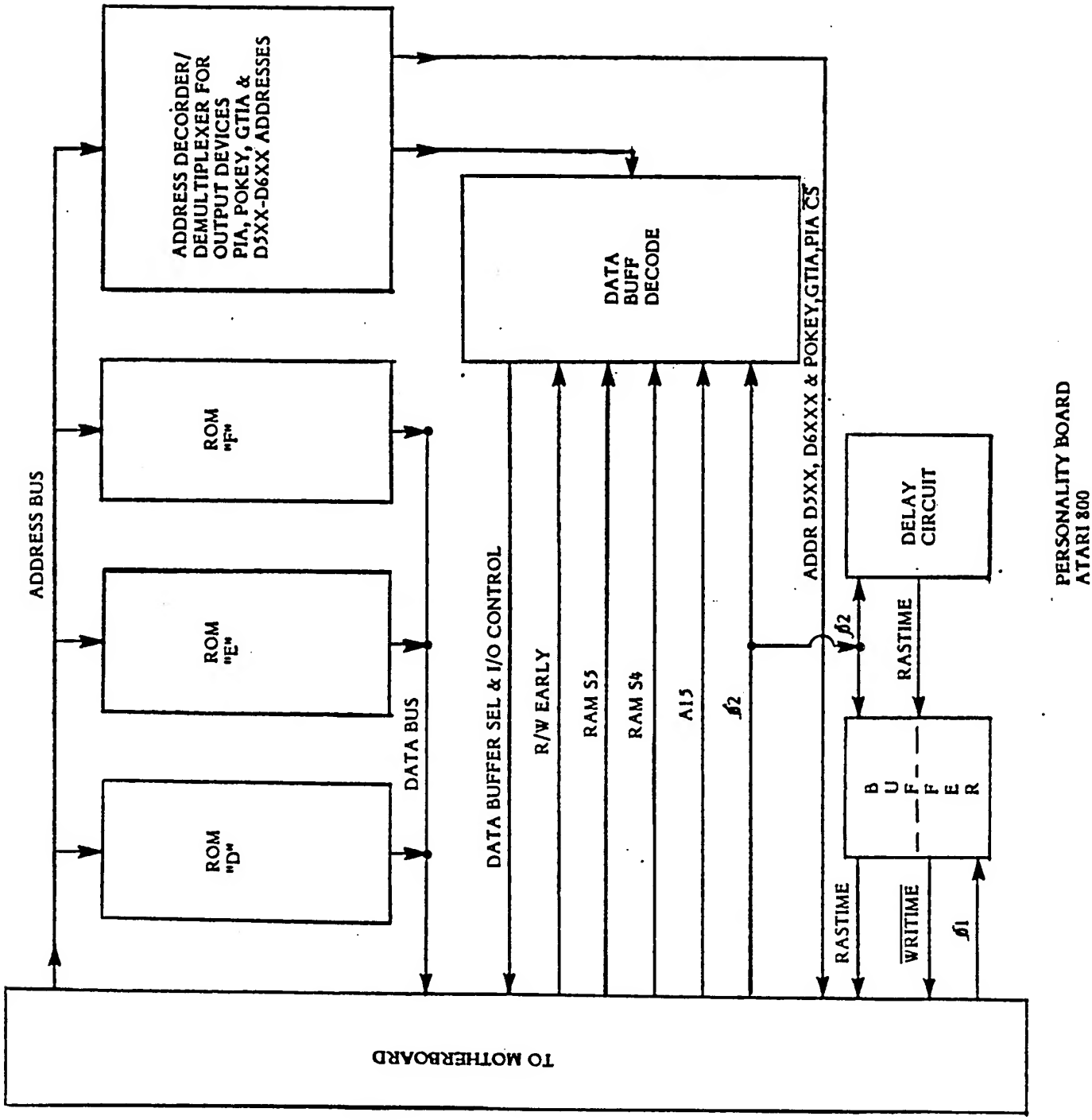

Figure 1-12. 800 Personality Board

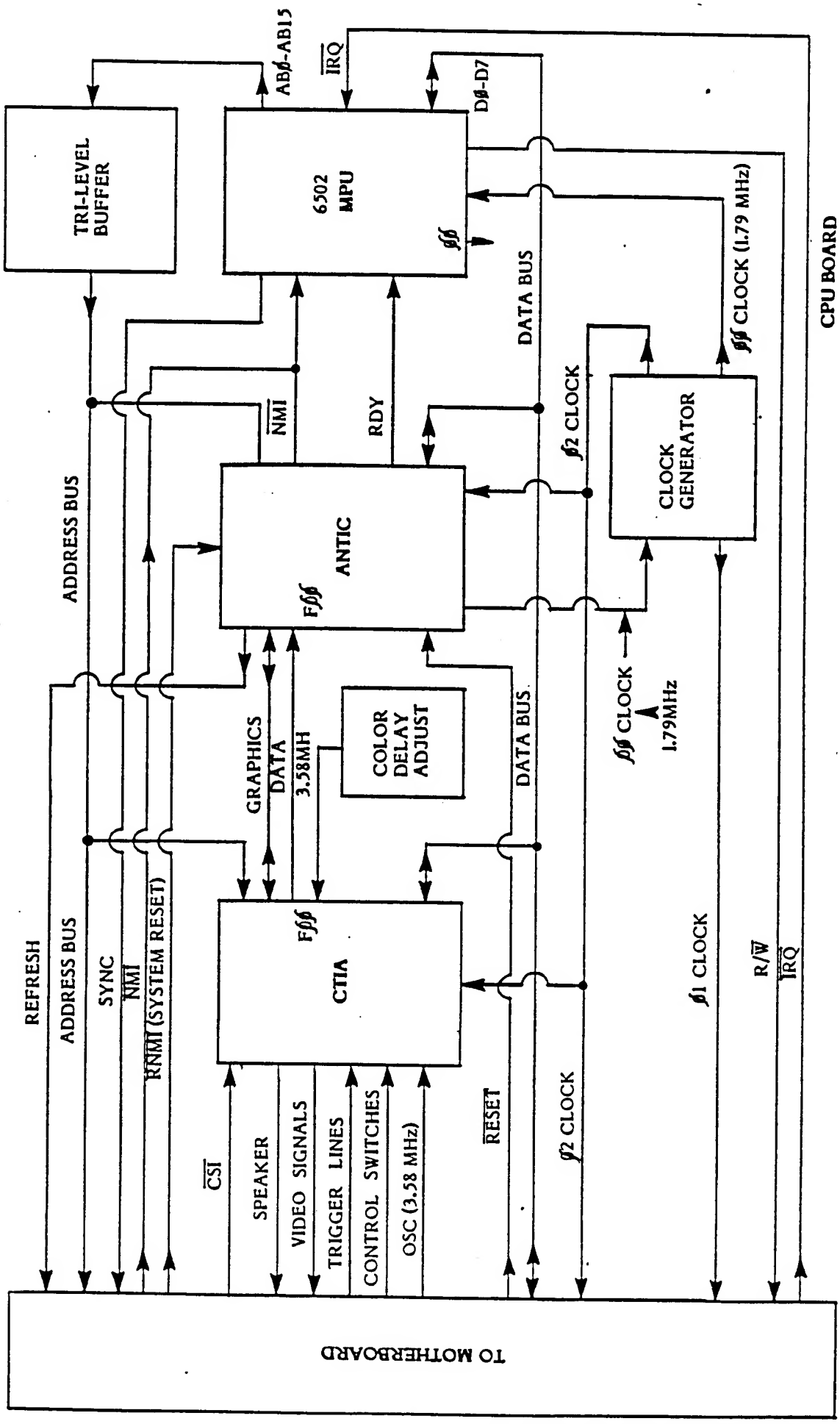

Figure 1-13. CPU Board Flow Diagram

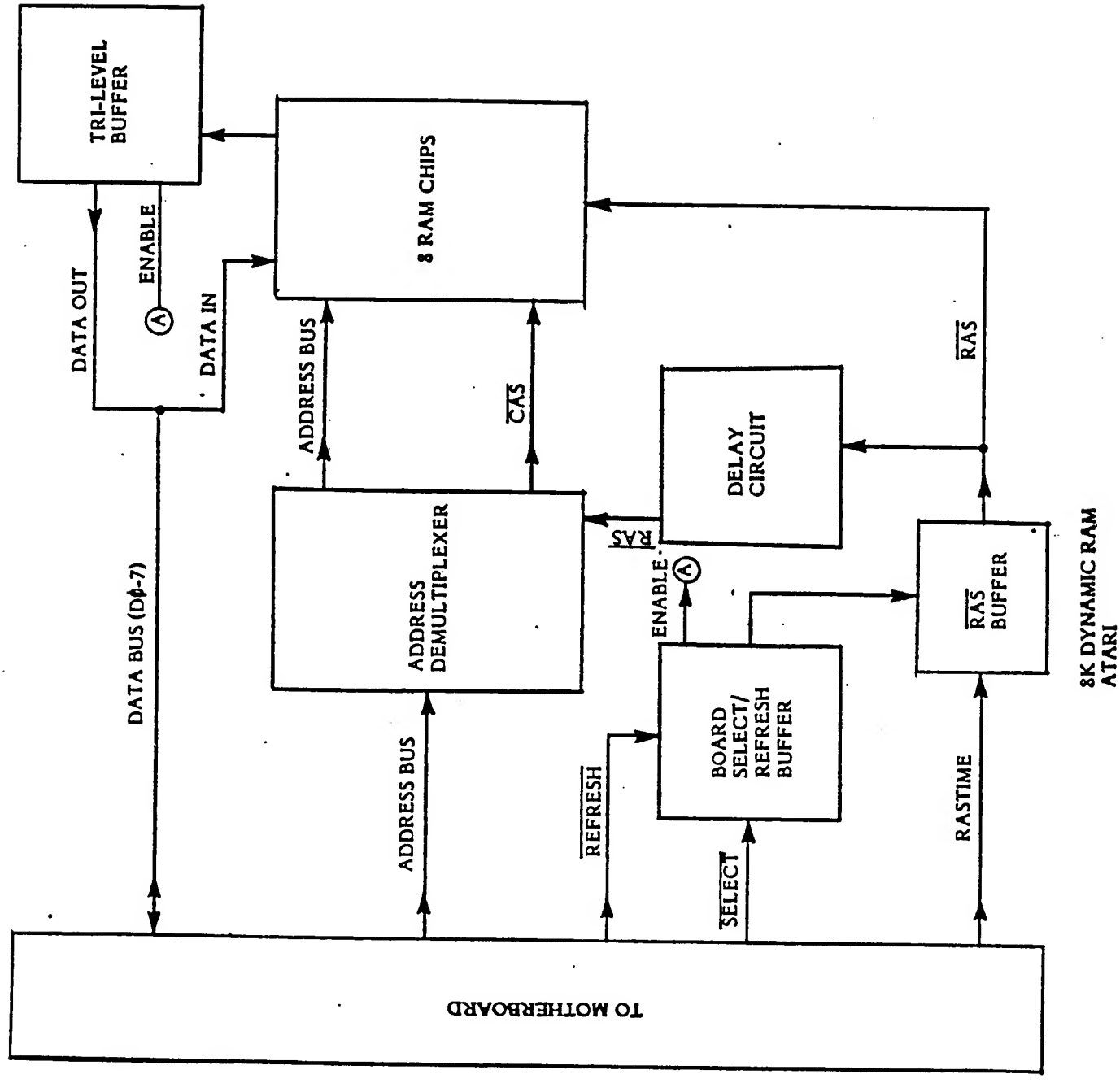

Figure 1-14. 8K Dynamic RAM Flow Diagram

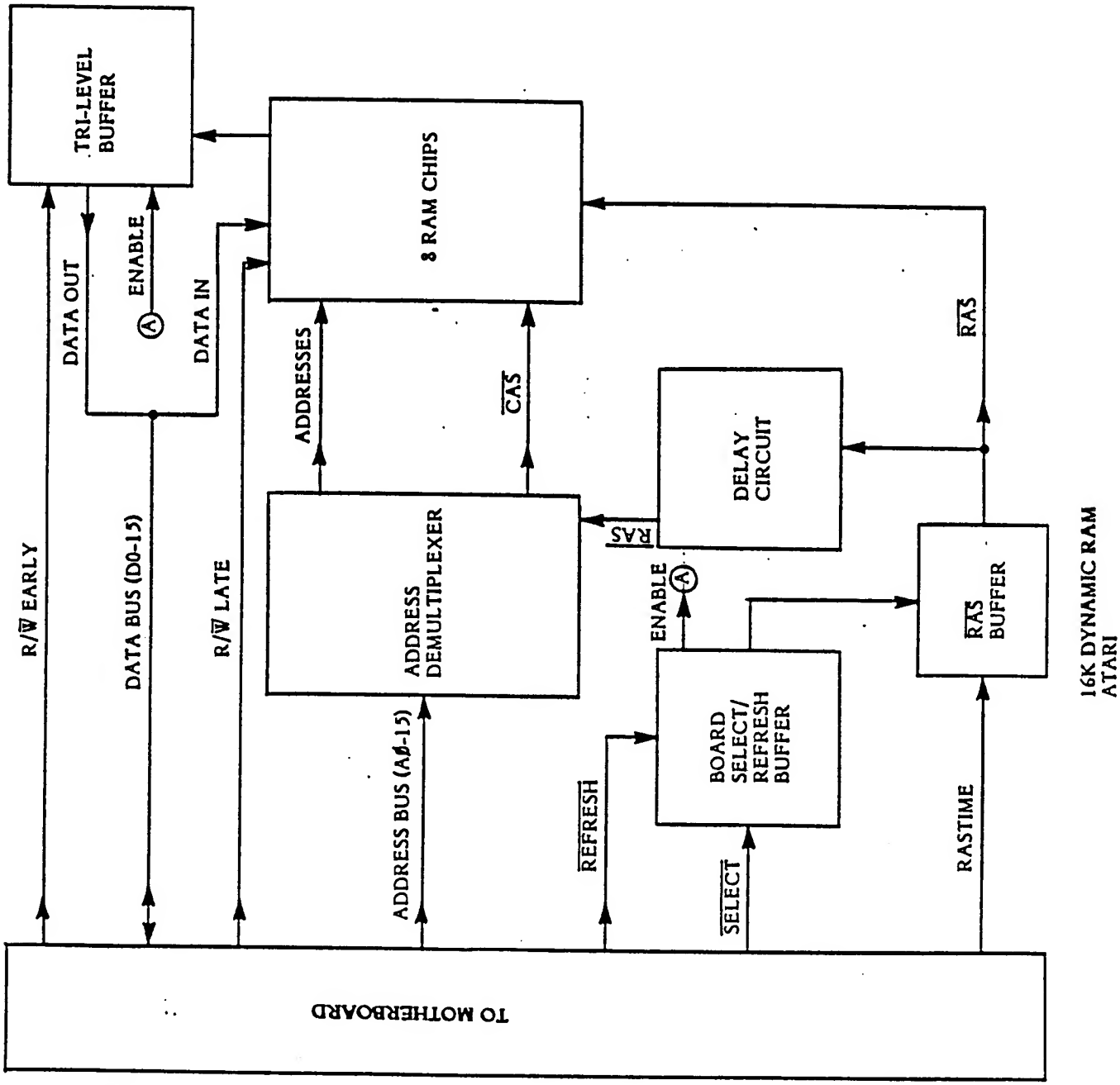

Figure 1-15. 16K Dynamic RAM Flow Diagram

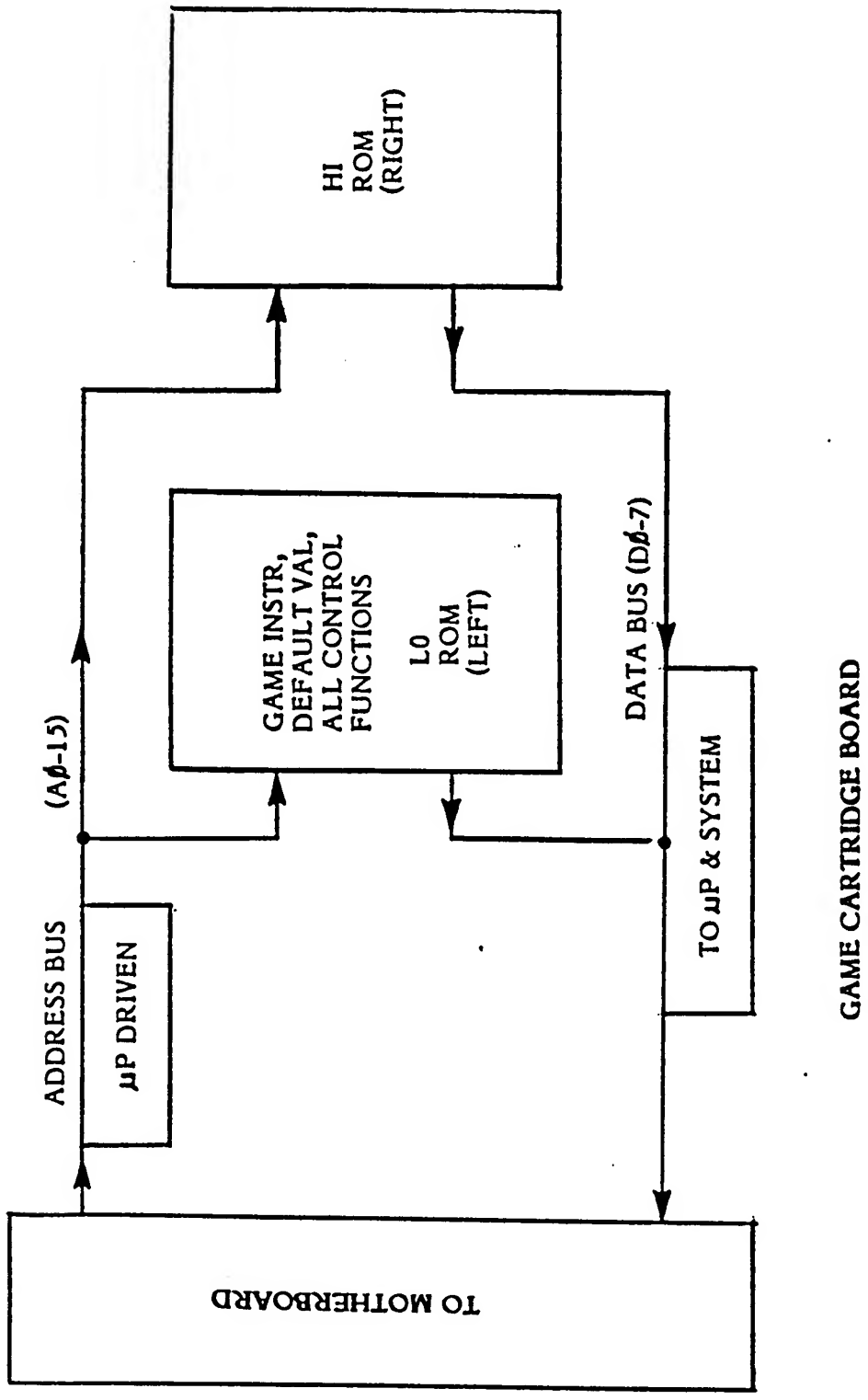

Figure 1-16. Game Cartridge Flow Diagram

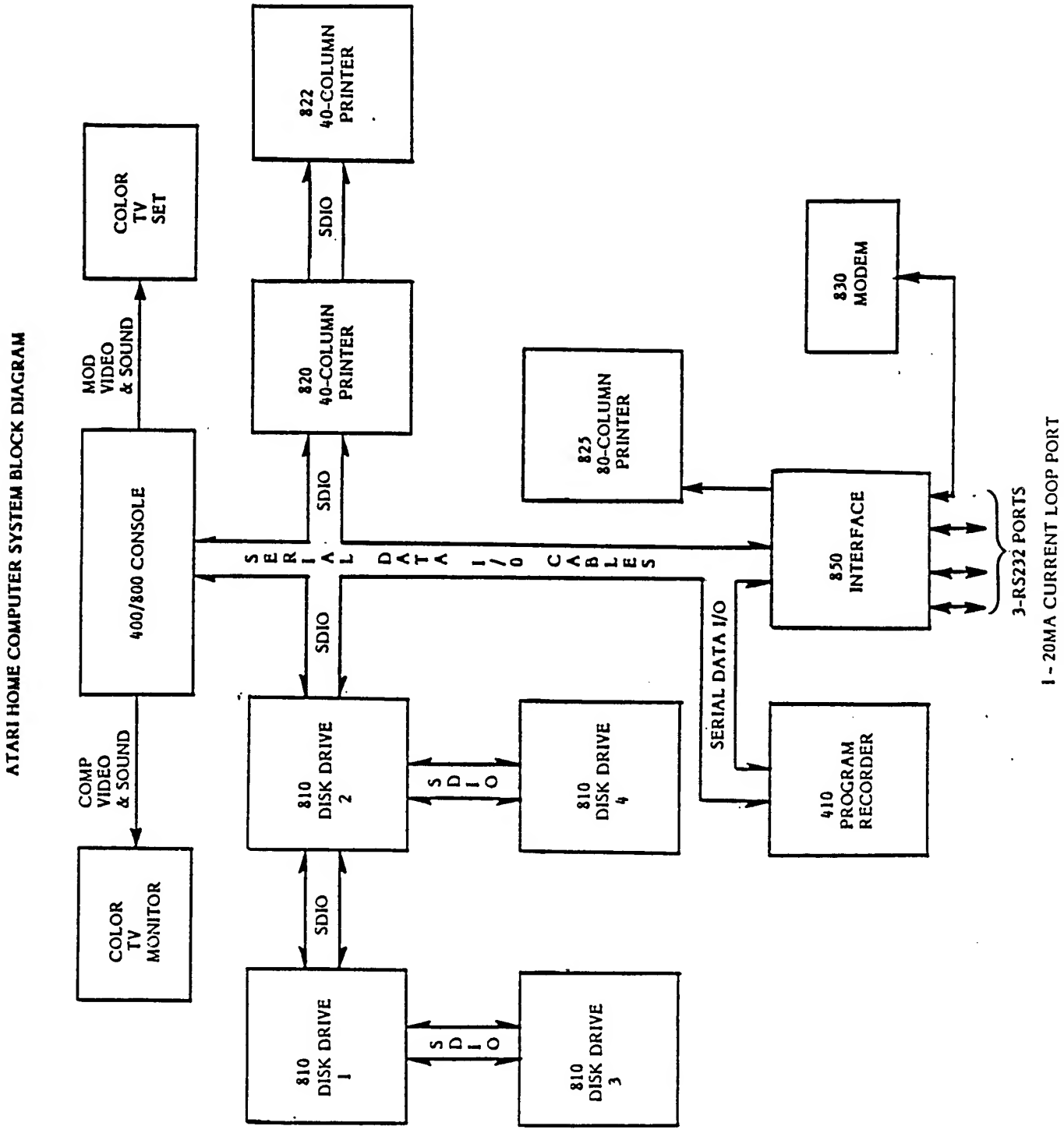

Figure 1-17. ATARI Home Computer System Block Diagram

SECTION 2

SILKSCREEN AND SCHEMATICS

The following pages contain representative silkscreens and schematics for the ATARI 400/800 Computer Consoles. Minor variations in design may be encountered depending upon the production date of the Console. These drawings provide all details required for an in-depth understanding of both the 400 and 800 Consoles.

THIS PAGE INTENTIONALLY LEFT BLANK

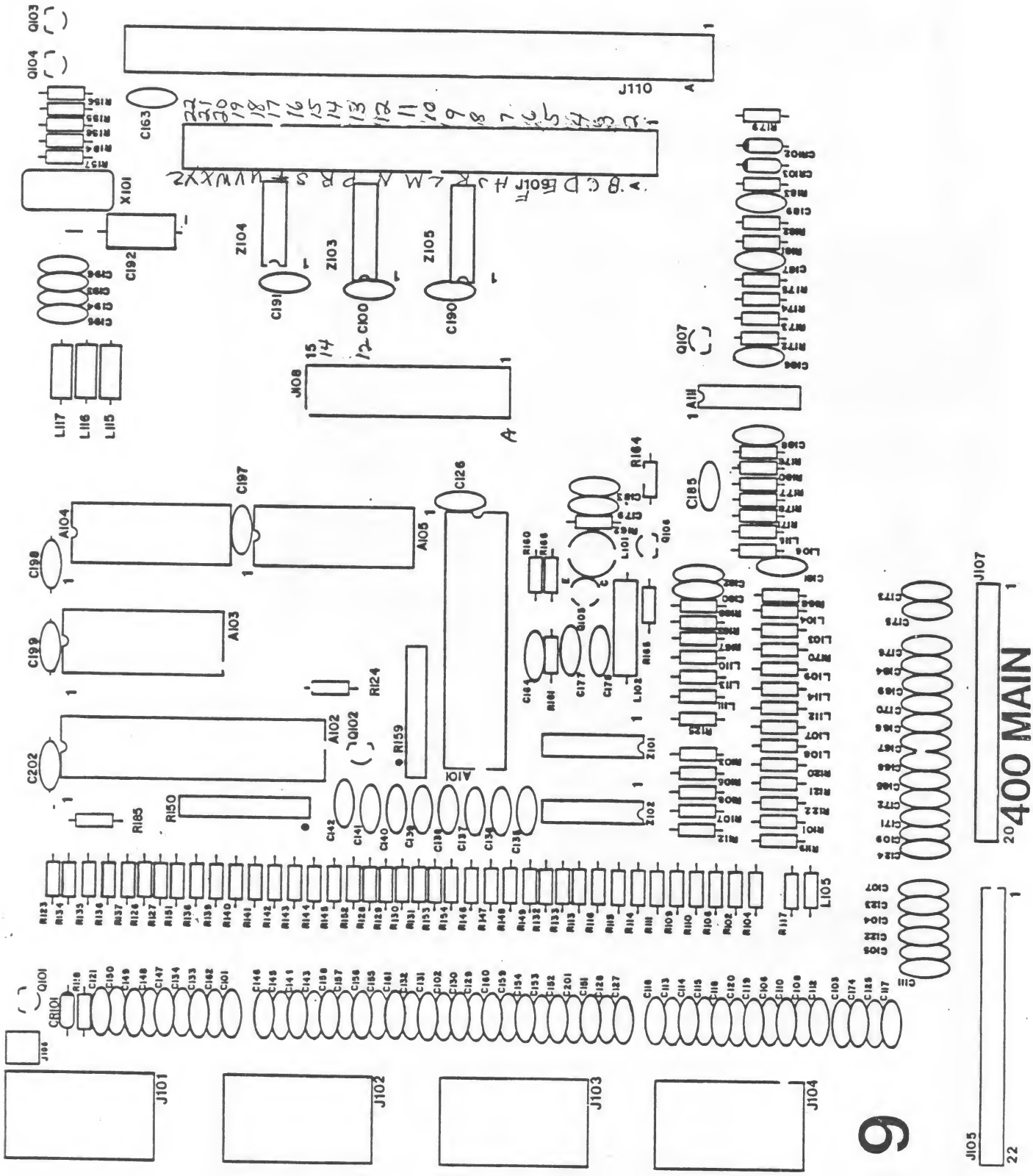

Figure 2-1. 400 Motherboard Silkscreen

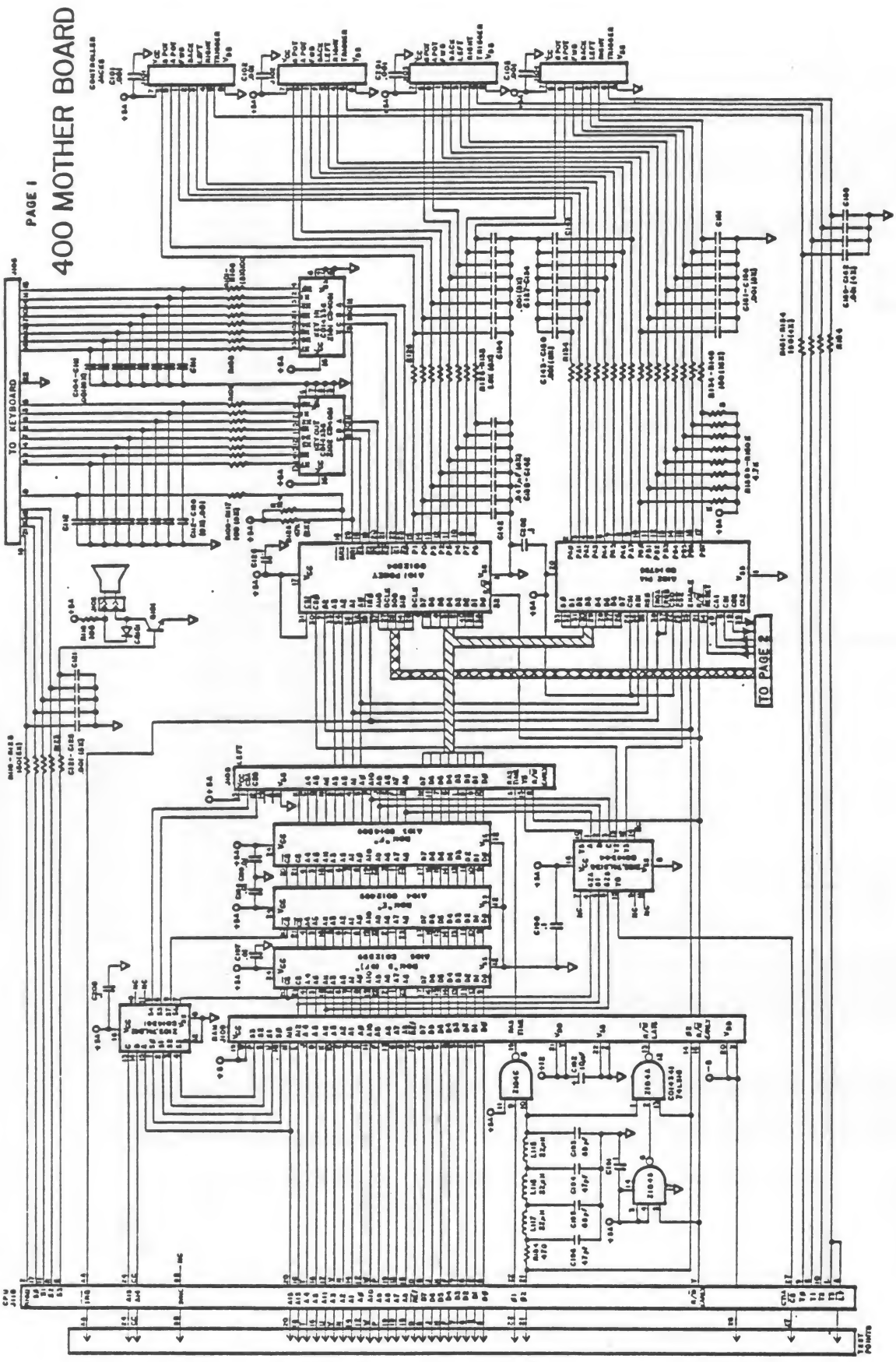

Figure 2-2. 400 Motherboard Scehmatic
Page 1 of 2

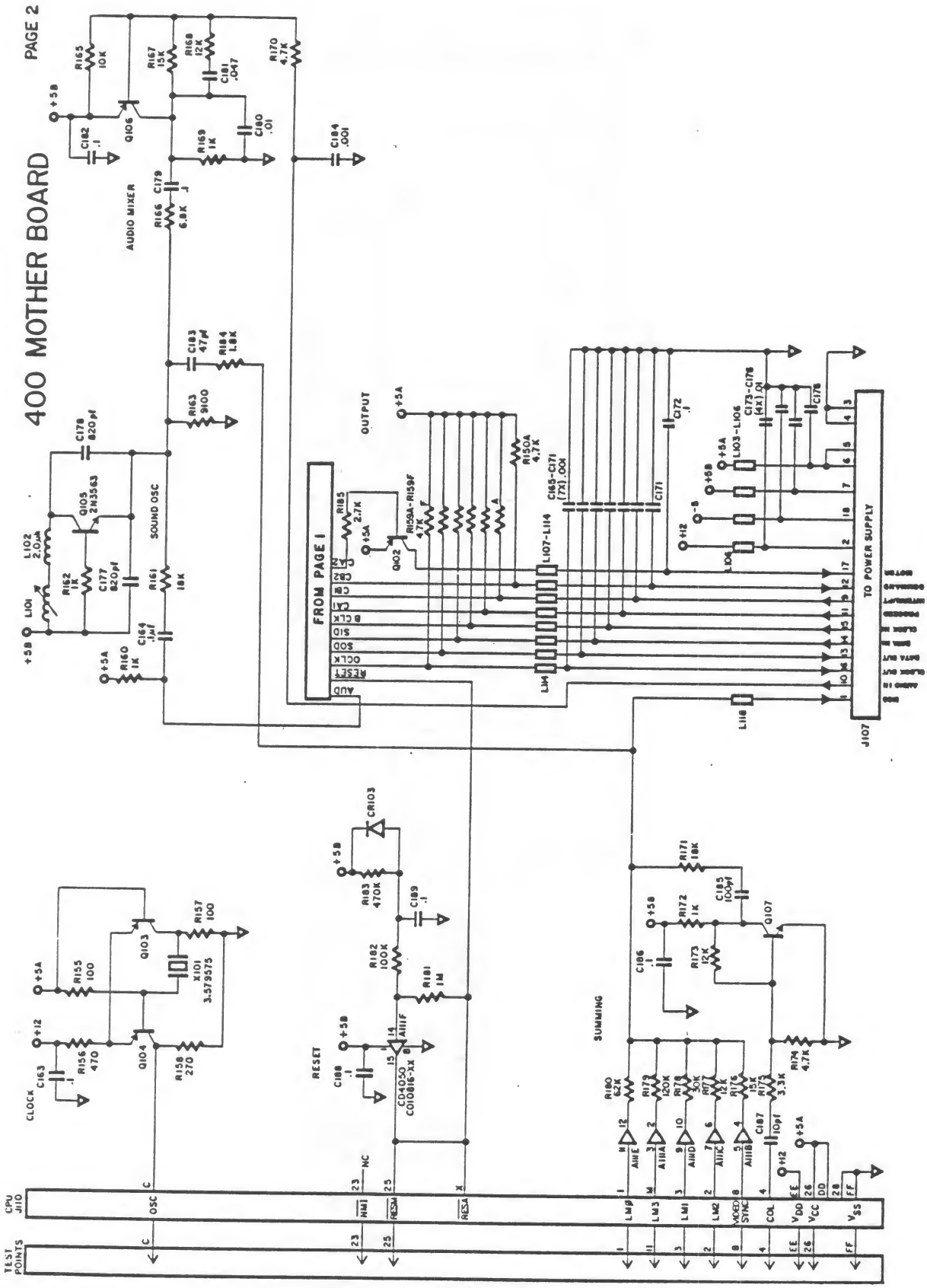

Figure 2-2. 400 Motherboard Scehmatic
Page 2 of 2

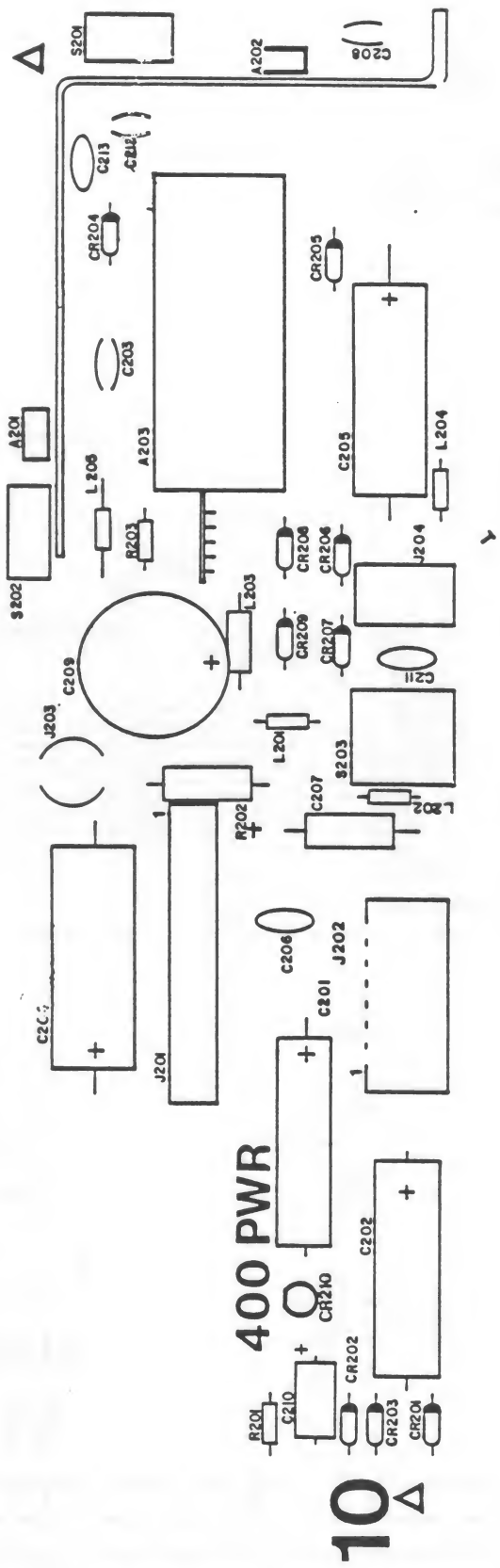

Figure 2-3. 400 Power Supply Silkscreen

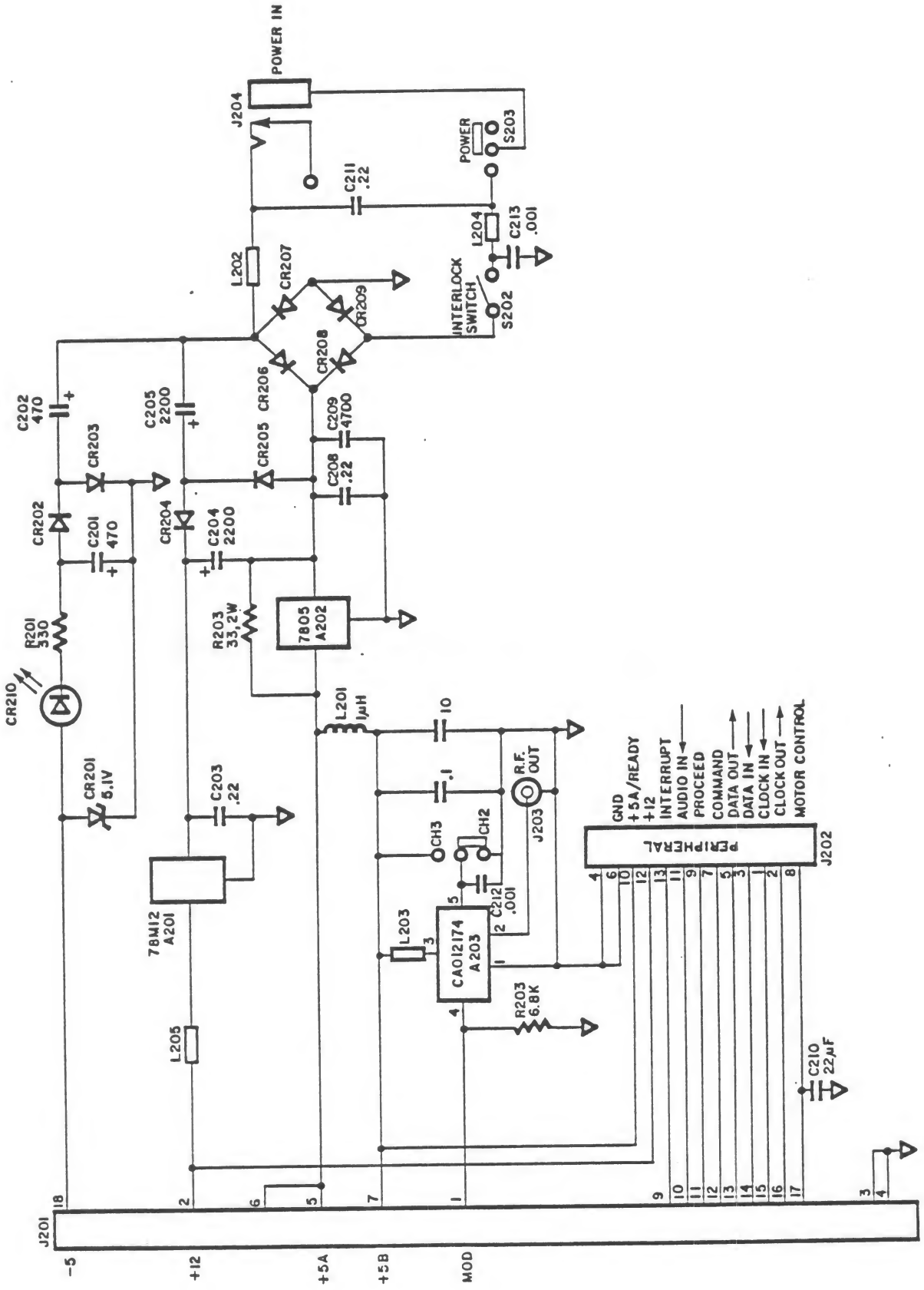

Figure 2-4. 400 Power Supply Schematic

THIS PAGE INTENTIONALLY LEFT BLANK

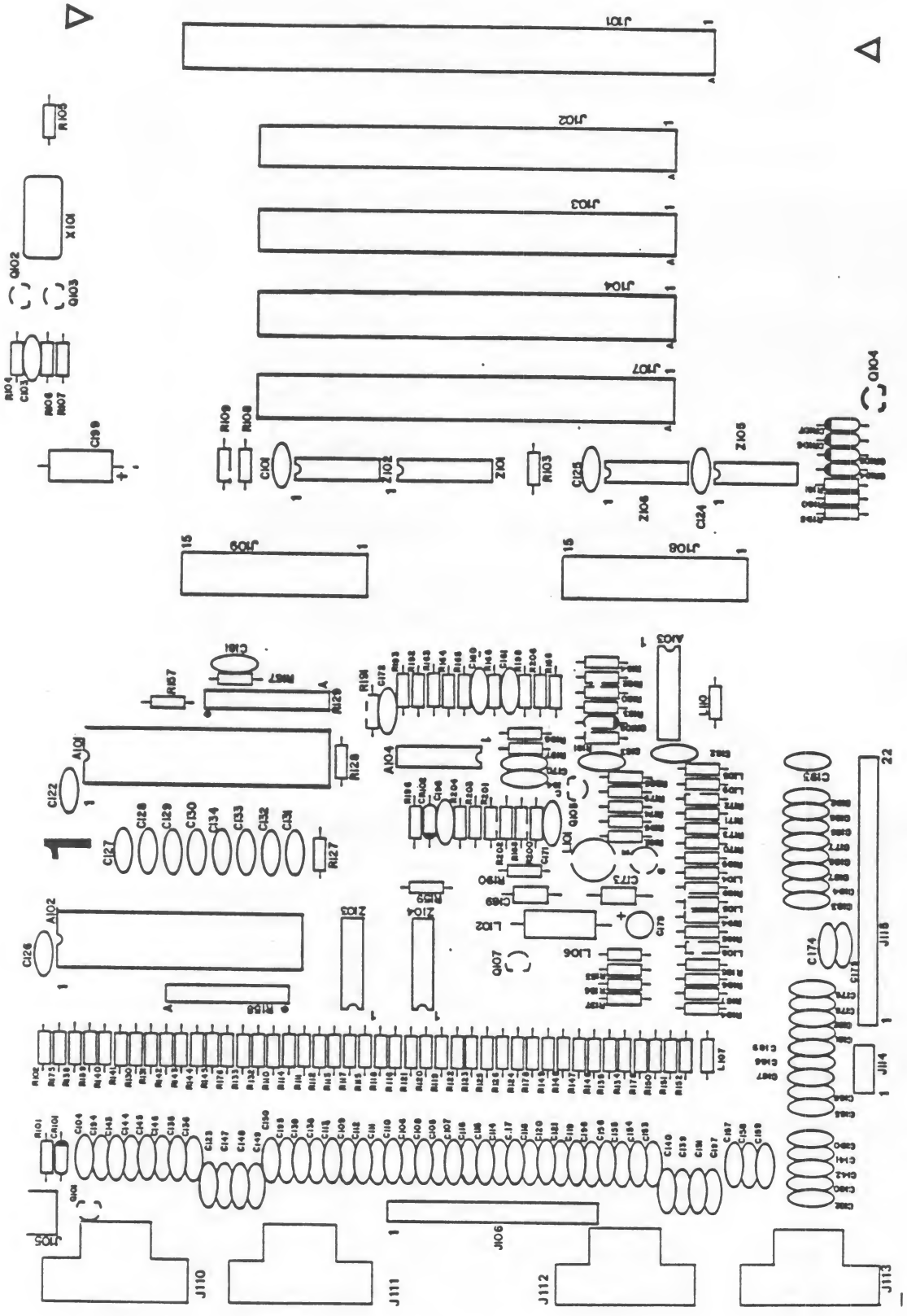

Figure 2-5. 800 Motherboard Silkscreen

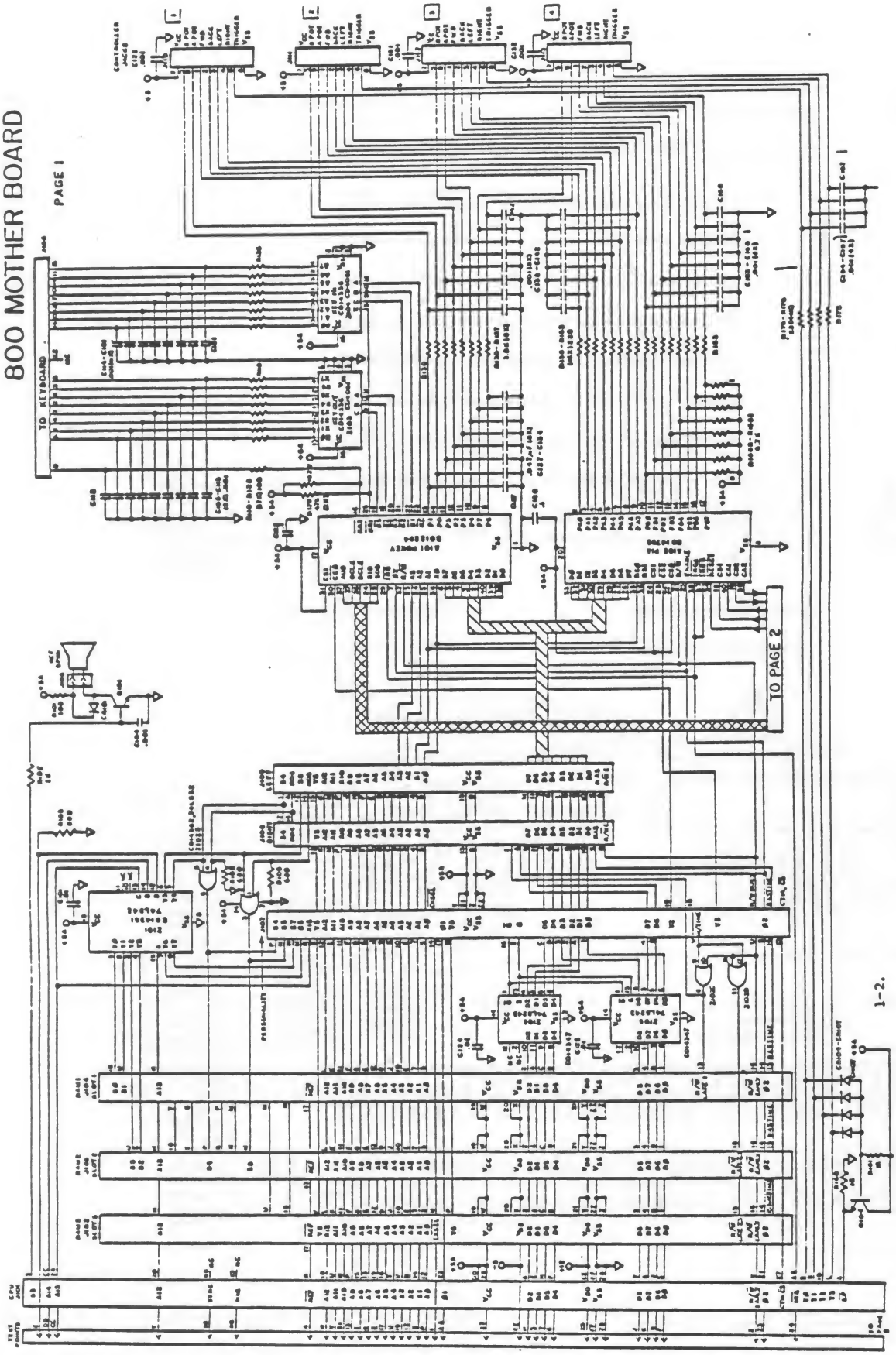

Figure 2-6. 800 Motherboard Schematic
Page 1 of 2

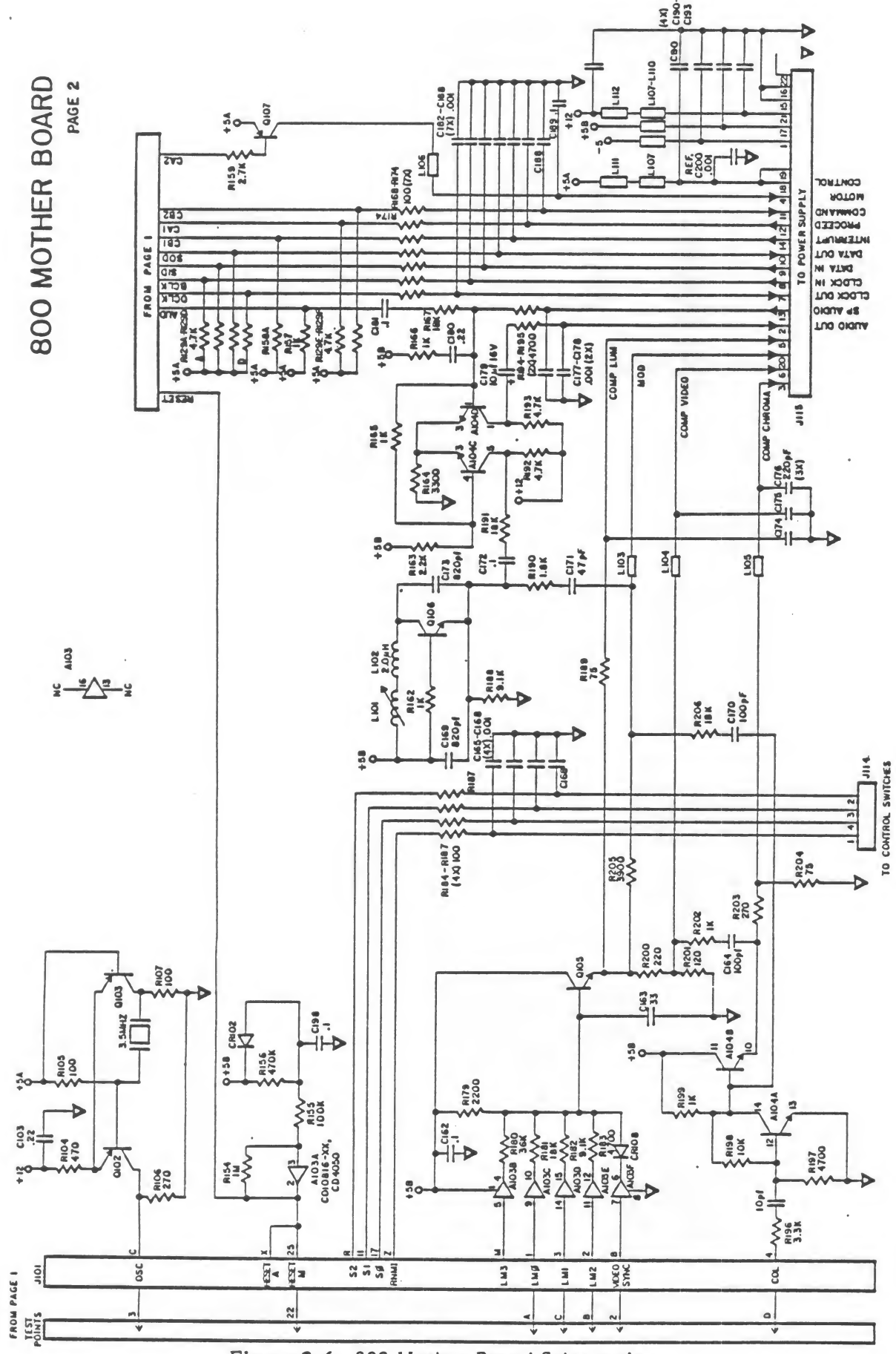

Figure 2-6. 800 Mother Board Schematic
Page 2 of 2

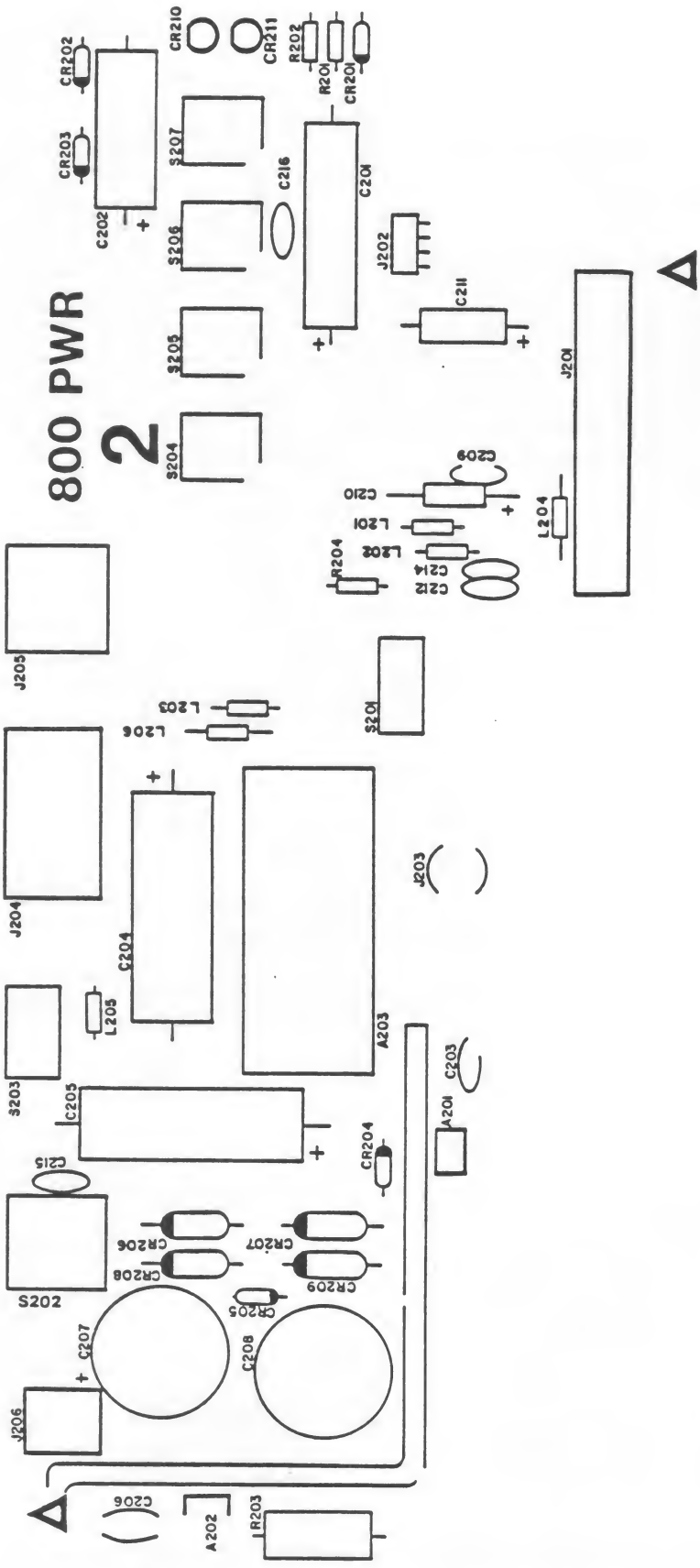

Figure 2-7. 800 Power Supply Silkscreen

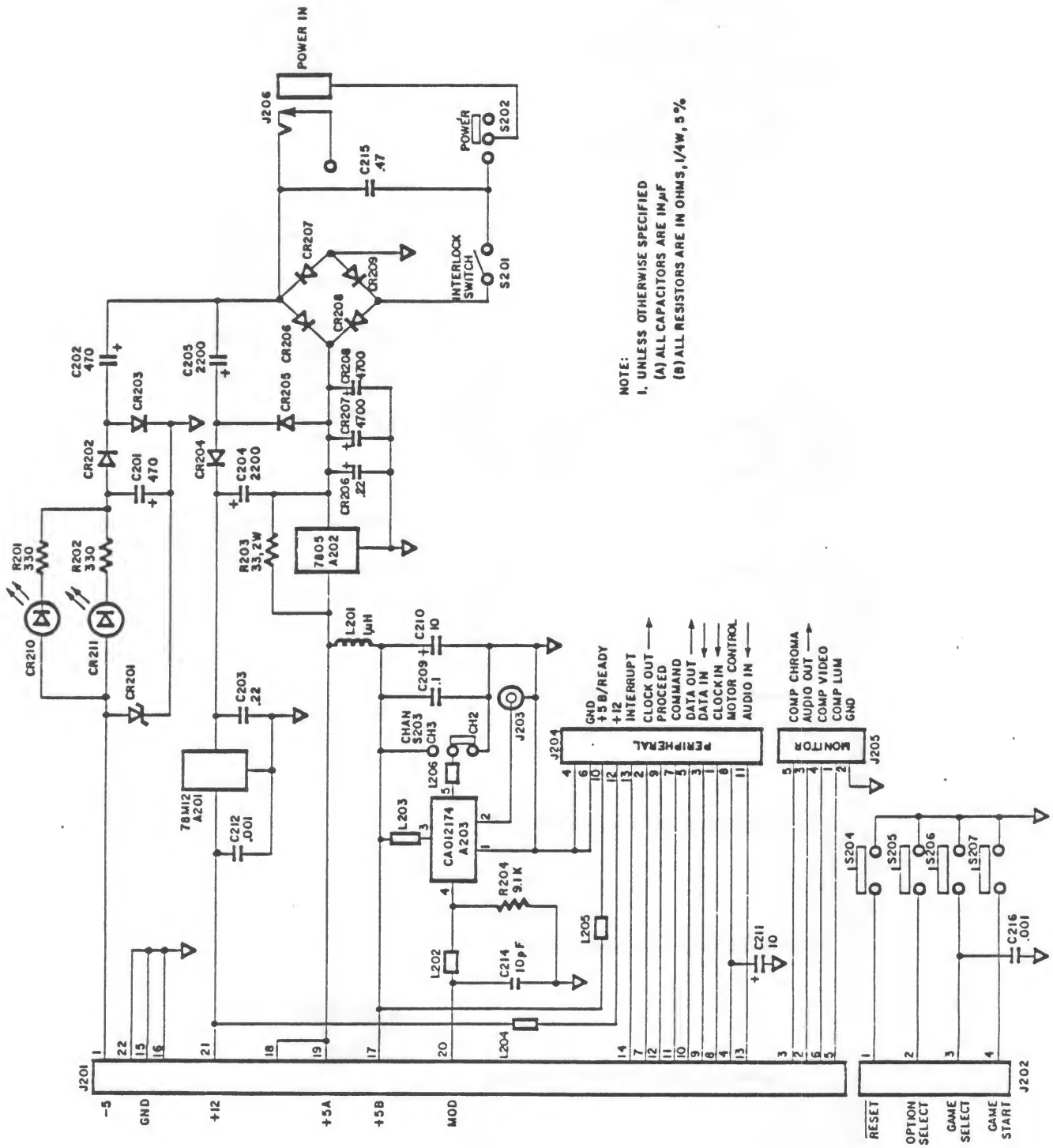

Figure 2-8. 800 Power Supply Schematic

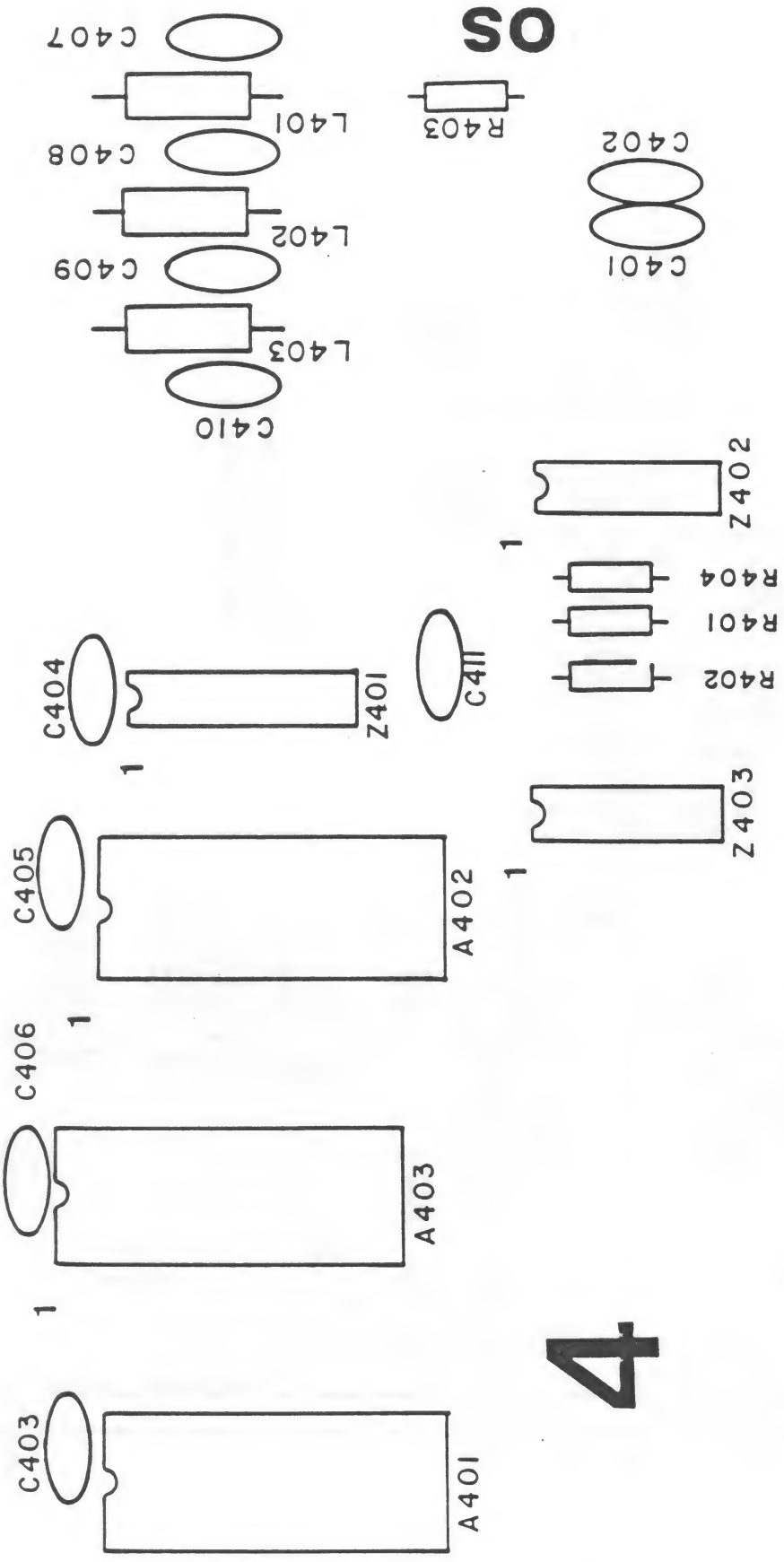

Figure 2-9. 800 Personality Board Silkscreen

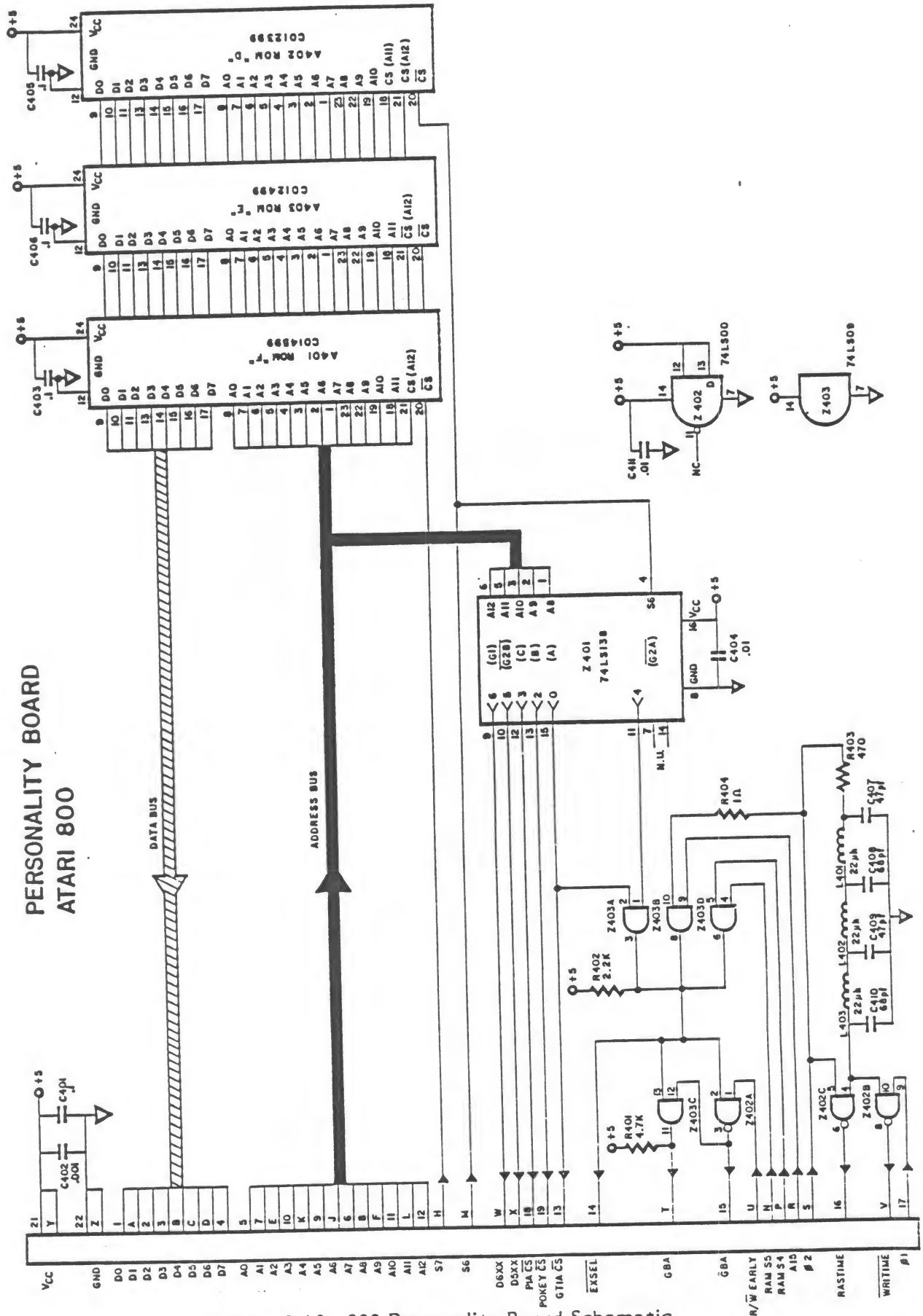

Figure 2-10. 800 Personality Board Schematic

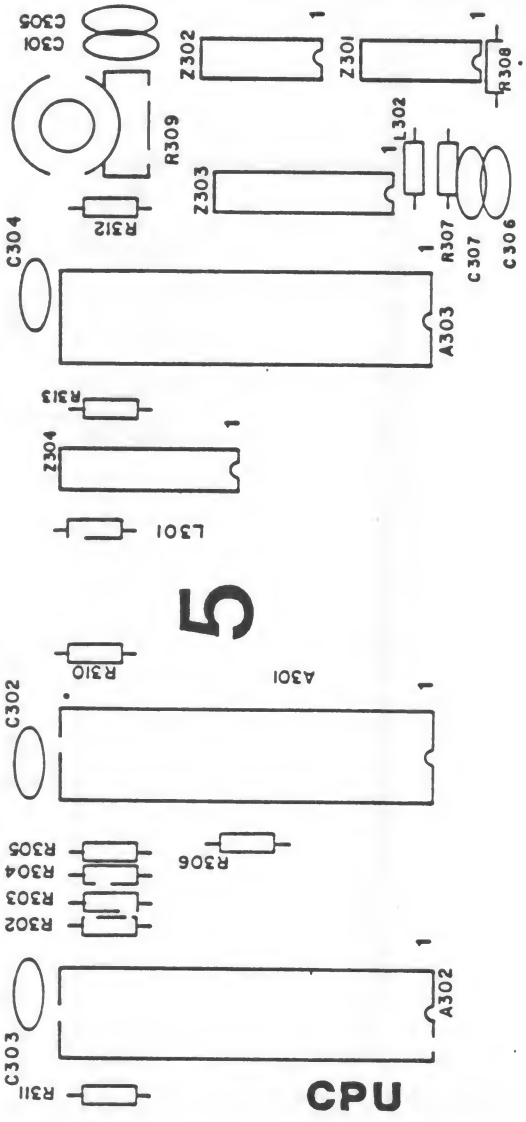

Figure 2-11. CPU Board Silkscreen

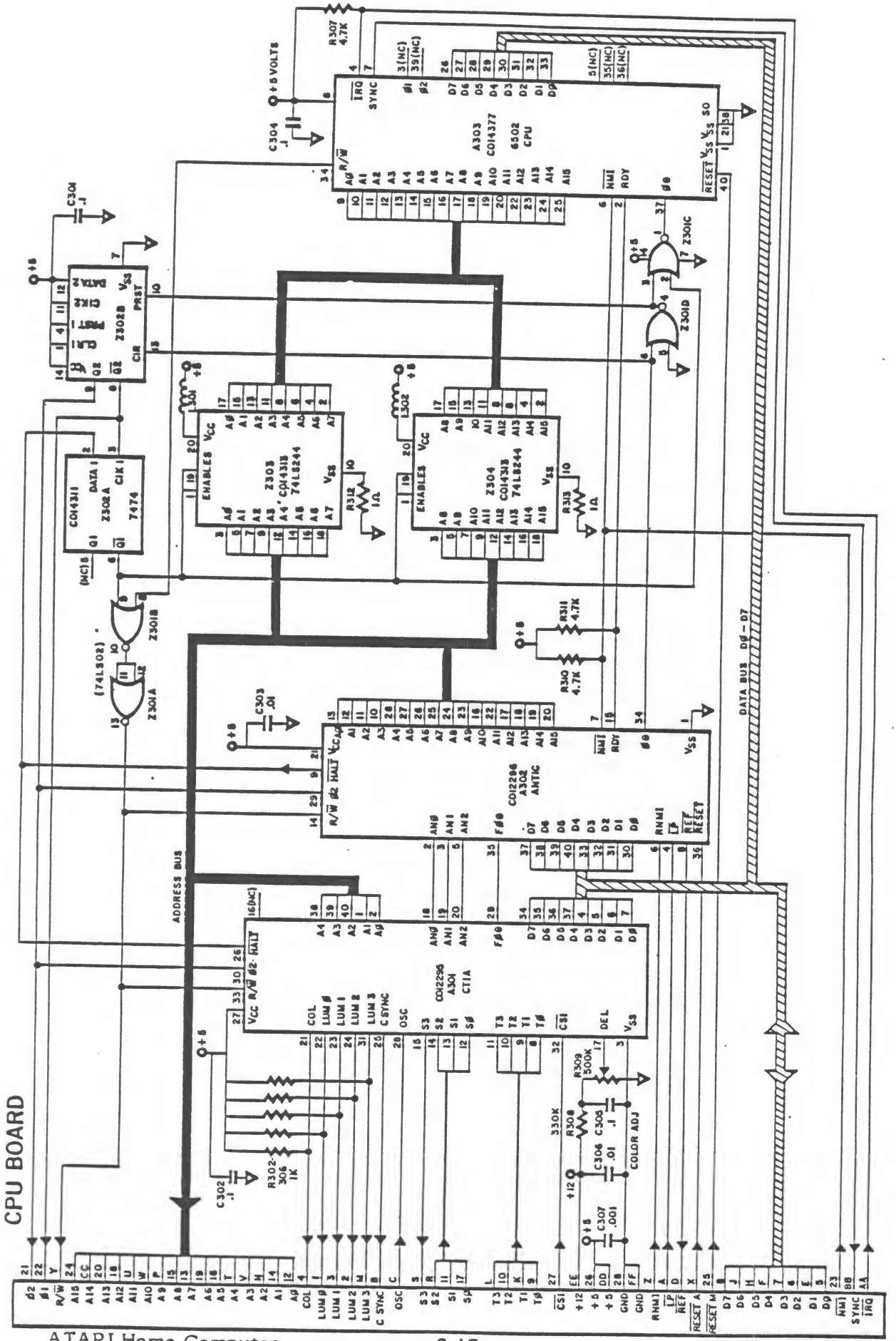

Figure 2-12. CPU Board Schematic

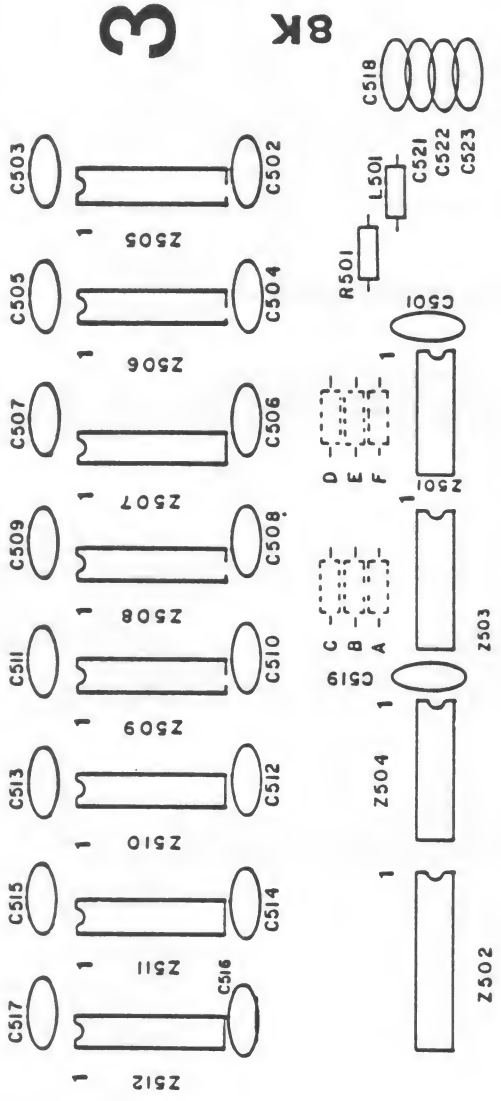

Figure 2-13. 8K RAM Board Silkscreen

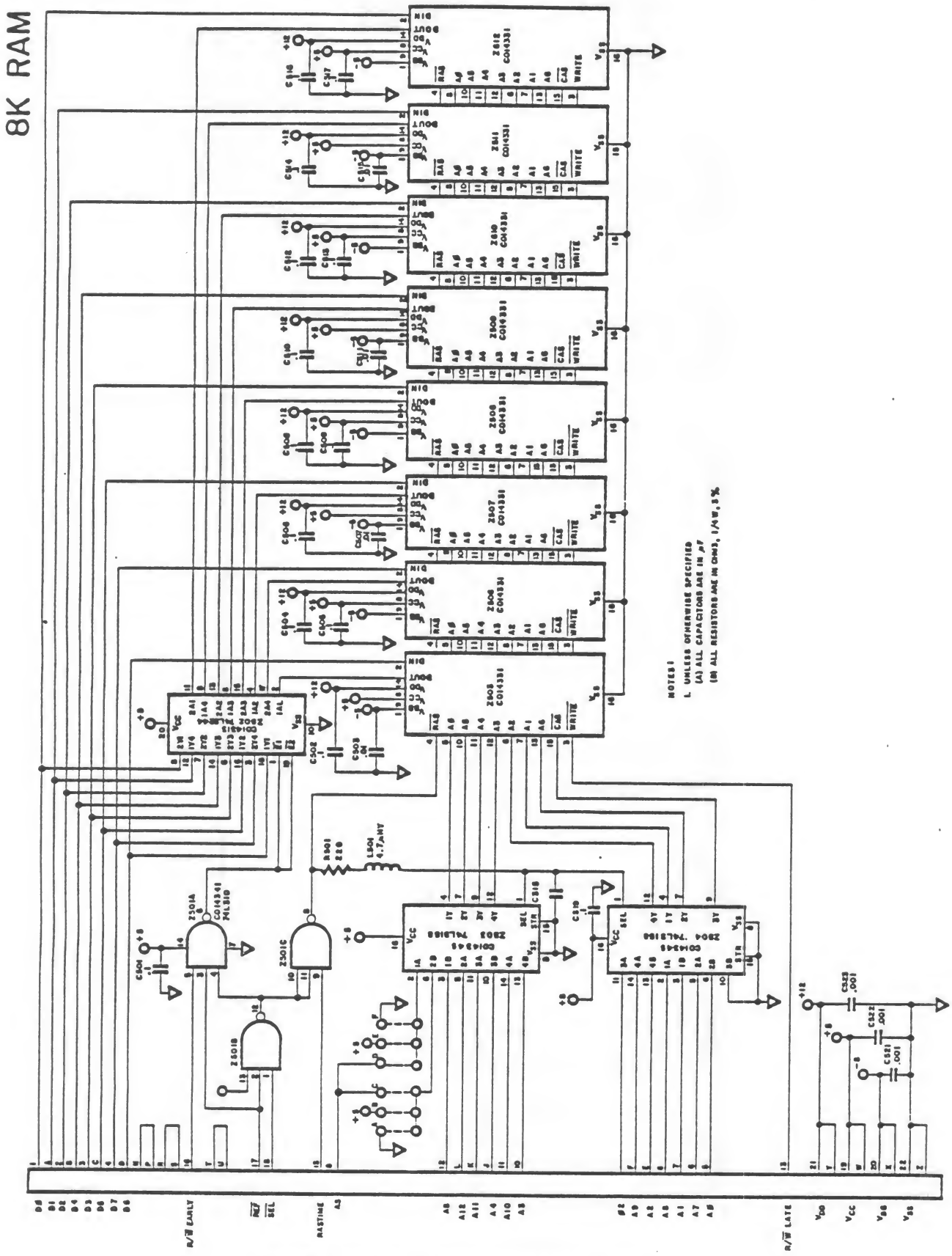

Figure 2-14. 8K RAM Board Schematic

Figure 2-15. 16K RAM Board Silkscreen

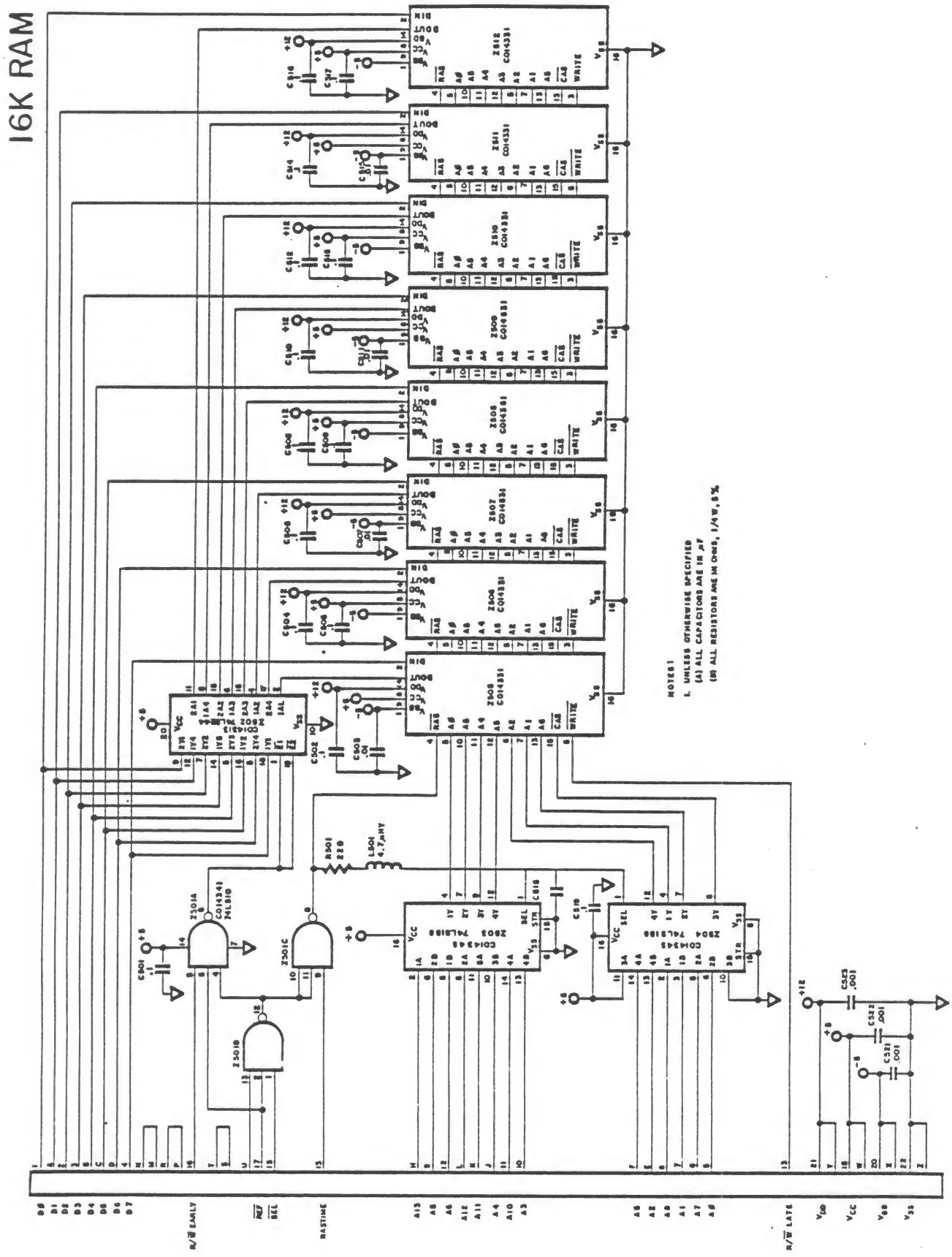

Figure 2-16. 16K RAM Board Schematic

16K RAM

SECTION 3

TROUBLESHOOTING AND TESTING

OVERVIEW

This section describes the procedures to maintain, troubleshoot, and test the ATARI 400/800 Computer Consoles. The section is divided into two major categories:

1. TESTS
2. TROUBLESHOOTING

TESTS

The following discussions pertain to the troubleshooting procedures required to checkout the ATARI 400/800 Home Computer Consoles.

Equipment Needed

You require six basic pieces of equipment in order to analyze the failures of the ATARI 400/800 Home Computer Console. These items include:

- 15MHz oscilloscope
- Stand Alone Test Cartridge (SALT II)
- Peripheral Port Test Connector
- Hand Controller Jack Test Connector
- Television Set (properly adjusted)
- Small Tool Kit

Testing With And Without The SALT II Cartridge

All tests are reviewed in this section. **Procedures for the use of the tests are detailed in Section 5, 400 Diagnostic Flowchart, and Section 7, 800 Diagnostic Flowchart.**

OVERVIEW OF TESTS

A variety of test routines assist you in identifying probable sources of problems within the computer console.

Power-Up Test

This test prepares the Console for the remainder of the tests. Should the Console fail this test, no other test results can be considered valid.

- Format: Connect the power adaptor to the Computer and the Computer to the television set. Make sure there is not a cartridge in the console —turn the POWER switch ON. The words ATARI COMPUTER - MEMO PAD should appear on the screen in the upper left corner.

Keyboard Test

This test verifies that all keys of the keyboard are properly functioning. This test also verifies that the POKEY chip's keyboard functions are operating properly. If one key fails, then the problem is likely the keyboard. If more than one key fails, you must perform further tests. (These tests are discussed later in this section.)

- Format: Depress each key of the keyboard. As you press each key, watch the screen to verify if the computer is echoing the key. Be certain to use the CTRL key with other keys. This checks special graphics functions not tested elsewhere (See Figure 3-1).

RAM and ROM Test

This test verifies that the CPU, RAM, and ROM chips are all properly functioning.

- Format: Due to the possible complexity of this test, it has been broken into four subsections.

    1. Turn the POWER off, insert the SALT II cartridge (for the 800, use the left cartridge slot), and turn the POWER on. The SALT Header should appear on the television screen (See Figure 3-2). This verifies that the CPU, Operating System (OS) ROMS, and the lower RAM are functioning.

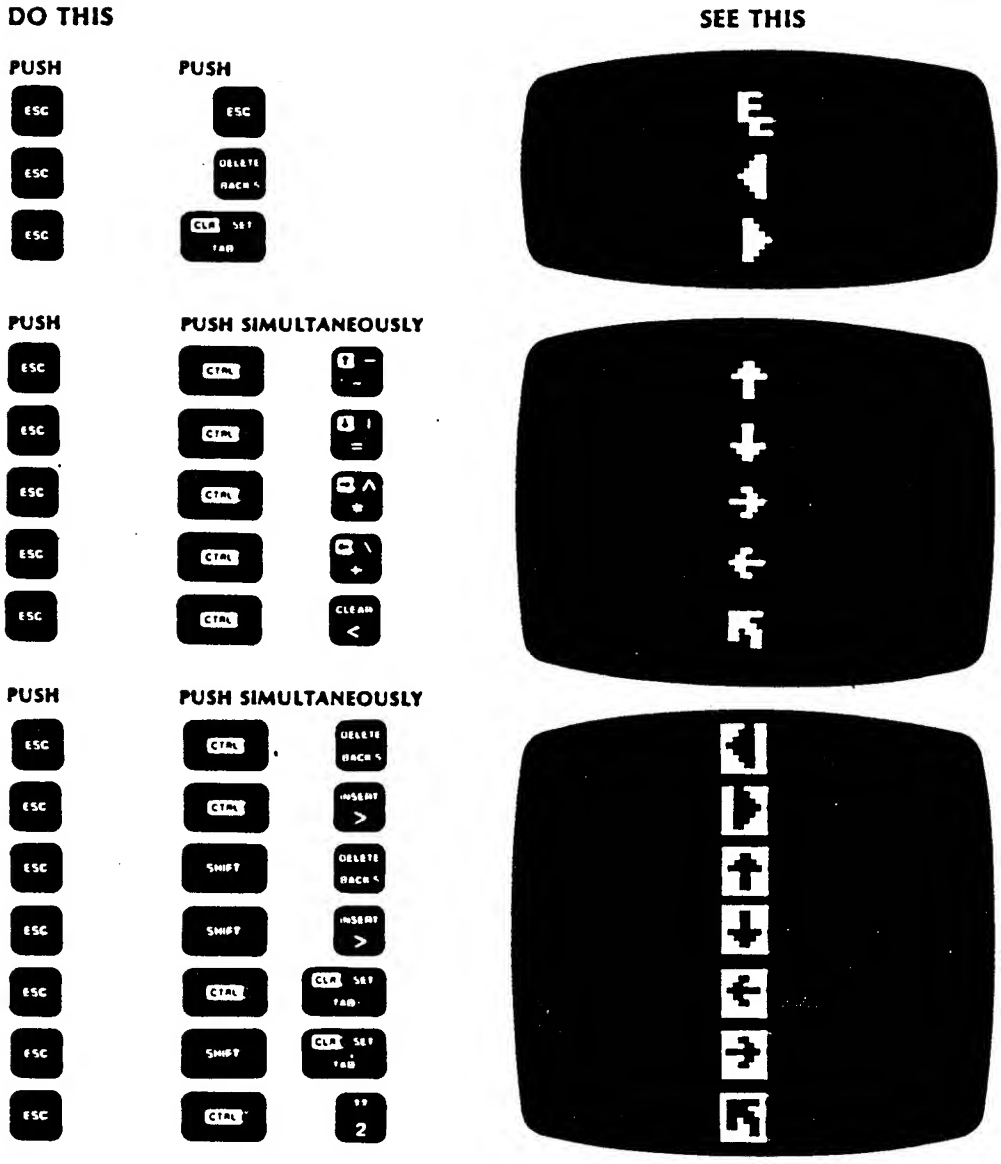

Figure 3-1. Special Graphics Test

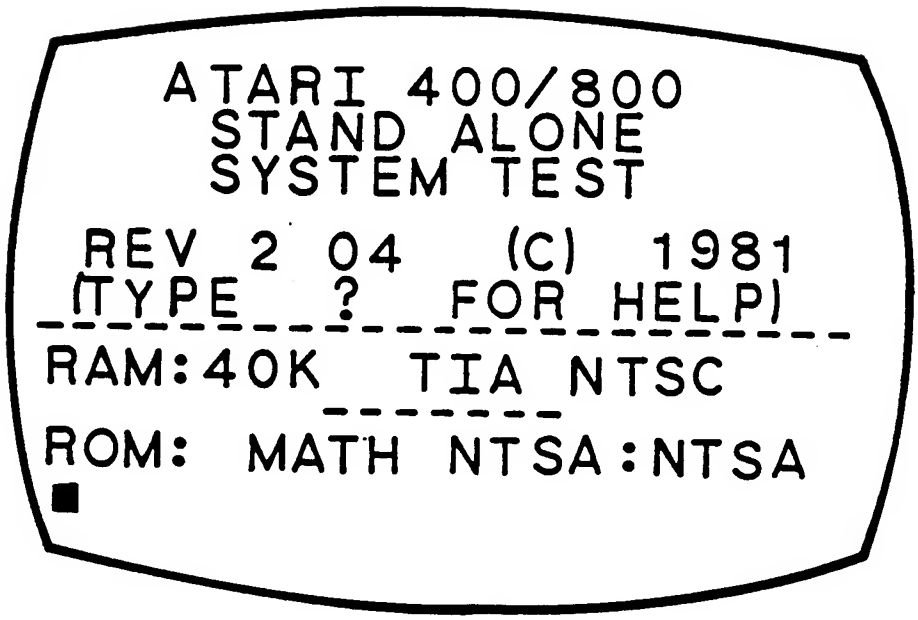

Figure 3-2. SALT Header

2. If a green/yellow colored screen is returned, this indicates a probable OS ROM malfunction. Swap-out the ROM set with a known good set (make certain to test after each ROM is replaced), this allows you to pinpoint the defective ROM.

3. If the words, **SYSTEM FAILURE** appear on the television screen, this indicates that the lower RAM is not functioning. When this happens and a 400 Computer is under test, turn the POWER off, swap-out the RAM board with a known good one and turn the Power on. If the SALT Header is returned to the screen, this indicates a probable malfunction in the RAM board which was removed. Refer to the DIAGNOSTIC FLOWCHARTS, Section 5 and 7 for troubleshooting procedures.

   If the 800 Computer is under test, turn the POWER off and swap-out the front RAM Card with a know good one. Place the suspected defective RAM CARD into the number 2 RAM slot (the third slot behind the OS), and turn the POWER back on. This lets the SALT II cartridge troubleshoot the suspected RAM CARD later in the DIAGNOSTIC FLOWCHARTS.

4. If RAM and ROM boards have been swapped and the condition continues to persist, swap the CPU board with a known good board to isolate the problems.

* * * NOTE * * *

Once you have isolated the problem to either the RAM, ROM, or CPU boards, clean the board edge connectors and retest the boards.

The SALT II cartridge takes you through the next phase of tests. Use the SALT II cartridge to perform the following tests.

SALT II Menu

Figure 3-3 illustrates the SALT II menu of tests. The highlighted character in Figure 3-3 is red on the screen and is the command letter for each test.

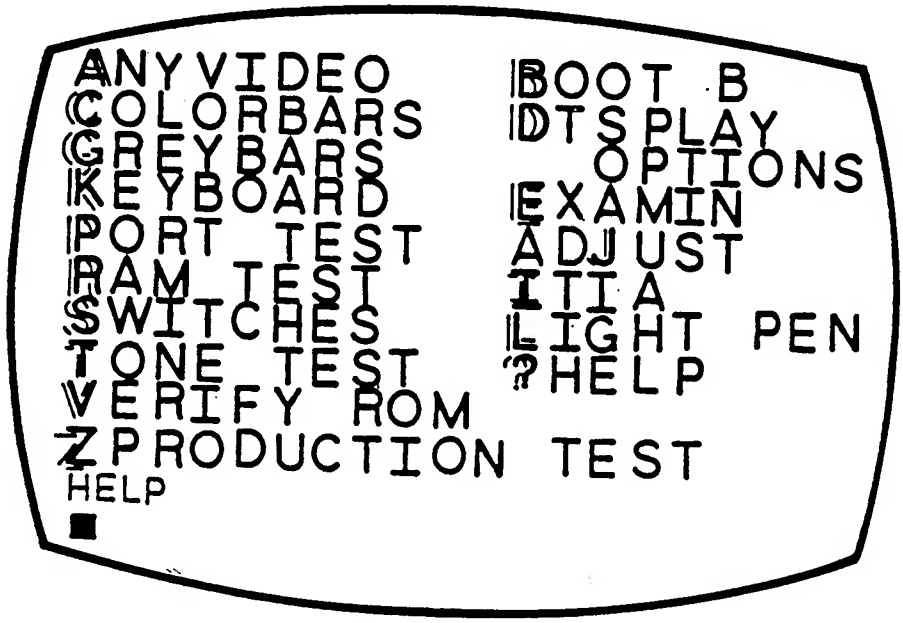

Figure 3-3. SALT II Menu

Color Bar Test

This test verifies and allows for adjustment to the color circuitry. With SALT II properly in place, enter the command letter **C** and press **RETURN.** Figure 3-4 is a black and white representation of what your television display screen should look like.

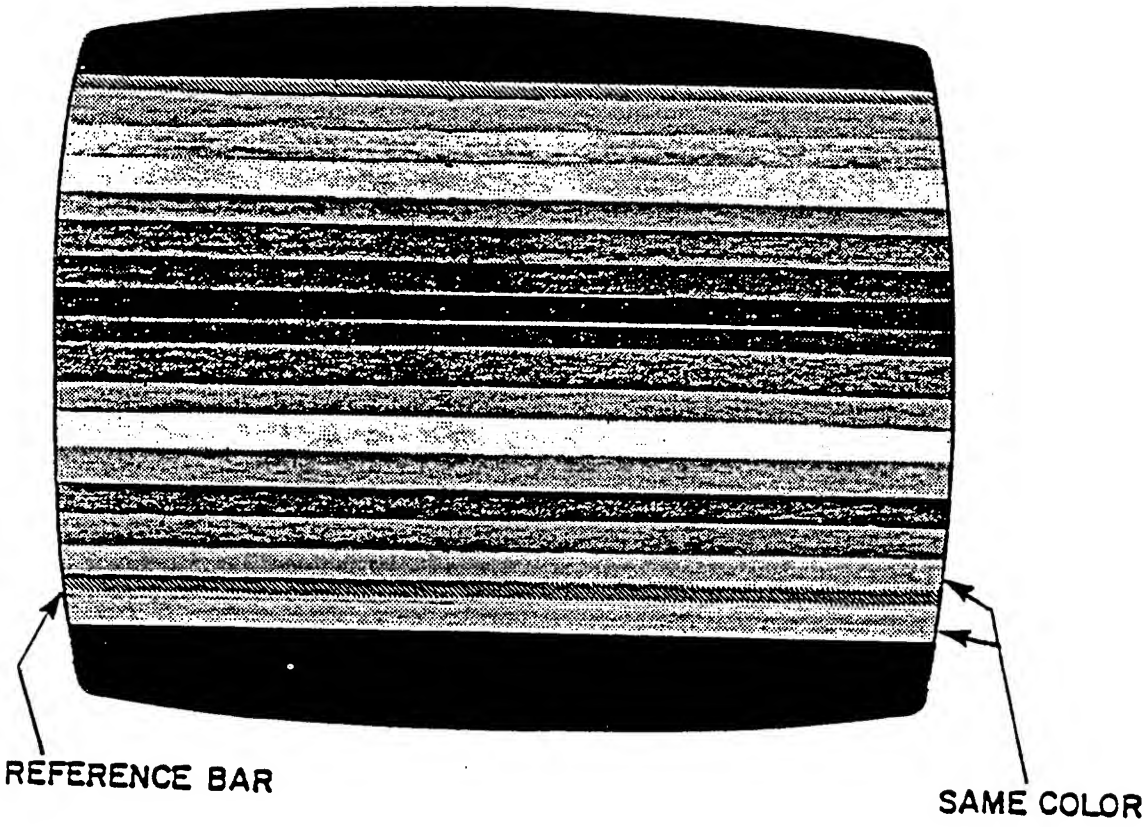

Figure 3-4. Color Bar Test Screen

A 15-color rainbow scale is displayed above the reference bar with a single color bar below. The color bars directly above and below the reference bar should be the same color (golden rod). If not, proper adjustment of R309 makes the color bars above and below the reference bar identical thus adjusting the color frequency of the console to the proper setting.

Proper operation of the unit is indicated by you being able to make this adjustment and by consistent color within the entire span of each bar on the screen. Minor glitches on the edges of the color bars are acceptable. Leave this test on for at least 60 seconds in order to catch any intermittent problems, such as a bar momentarily changing colors or blanking out.

Any Video Test

This test verifies the console's ability to generate a video (TV) display. This test also checks for pattern sensitivity of the ANTIC chip.

By entering the command letter **A** and pressing **RETURN**, this test is activated.

Figure 3-5 illustrates the screen display for the Any Video Test. **NOTE:** Figure 3-5 is a black and white representation of a colored screen.

The screen should have a black background with eight vertical bars. Half of the vertical bars should be narrow, and the other half, much wider. A horizontal bar should appear across the top of the screen. From the left to right, the shade of color on the horizontal bar should change. On the right of the bar, two Vs should be displayed, right side up; one in normal video and the other in inverse video.

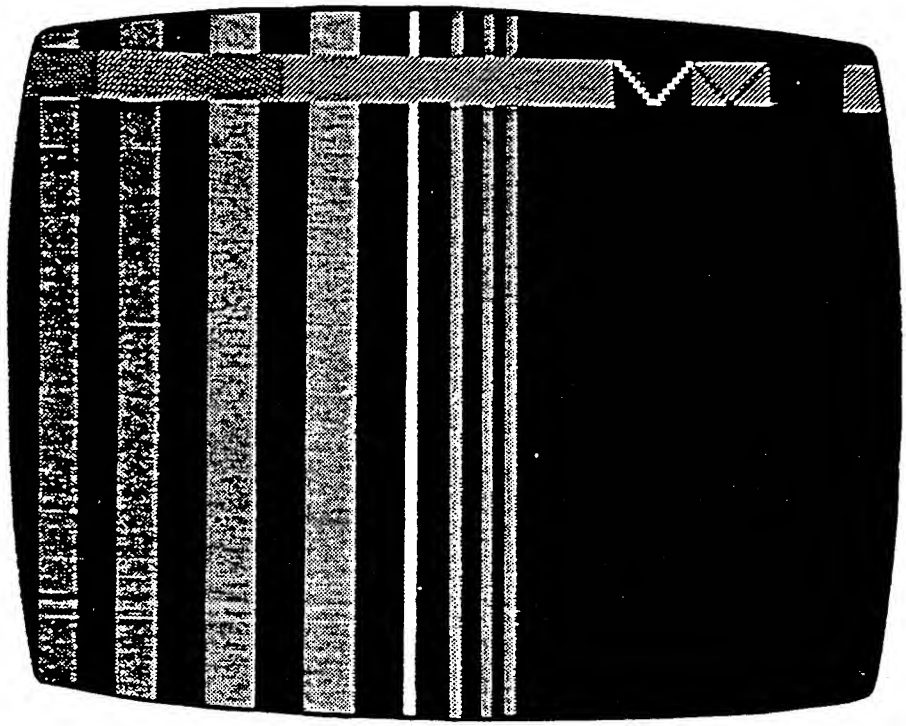

Figure 3-5. Any Video Test Screen

Gray Bar Test

This test verifies that the CTIA (GTIA) is generating the three LUM lines.

By pressing the command letter **G** and then **RETURN**, this test activates.

Figure 3-6 illustrates the screen display of the Gray Bar Test. The screen is divided into eight equal sized horizontal bars. The bar at the top of the screen should be black and subsequent bars should progress to white at bar eight. The bars should lighten in even shades. The screen should be steady and unchanging. These lines may have minor glitches at their edges. A thin white line should always appear just over the top (black) bar. No color should appear anywhere on the screen. The areas above the top (black) bar and below the bottom (white) bar are of no importance to this test. This test should be left on for at least 60 seconds to ensure that there is no "flashing" of color or shifting of the gray bars.



Figure 3-6. Gray Bar Test Screen

Keyboard Test

This test verifies the Console's ability to accurately accept operator input from the keyboard.

By pressing the command letter **K** and **RETURN**, this test is activated. You are to press each of the keys EXCEPT, the SPACE BAR, CNTL and both SHIFT keys. Each letter pressed is returned to the display screen. Once this portion of the test is completed, hold down the **CNTL** key and press the letter **A**. The letters **CTRL** are returned to the screen. Now, hold down the left **SHIFT** key and press **A**. The word **SHIFT** is returned to the screen. By holding down the right **SHIFT** key and pressing A, the word **SHIFT** is again returned to the display screen. Finally, press the **SPACE BAR** and then, **RETURN**. The words **KEYBOARD PASS** or **KEYBOARD FAIL** appear on the screen below the keyboard test. If the SALT II cartridge detects any key failures during the test, the defective keys appear on the screen in the color red.

Switch Test

This test verifies the proper operation of the four Console Switches (START, SELECT, OPTION, and SYSTEM RESET). By pressing the command letter **S** and pressing **RETURN**, this test is activated. Press the console switches in the following order: 1) **START**; 2) **SELECT**: 3) **OPTION**; and 4) **SYSTEM RESET**. Upon pressing **SYSTEM RESET**, either PASS or FAIL is returned to the screen.

Tone Test

This test verifies the ability of the POKEY to generate four sound registers through its sound generation circuits. Press the command letter **T** and **RETURN**. A prompt (question) is returned to the screen asking you which register you want to test. You must press the key with the number of the register you want to test (1, 2, 3, or 4) and then press **RETURN**.

The test generates eight tones in descending order. The first three tones are very high and may be inaudible to some people. Each tone begins at maximum volume and fades to minimum volume. You must enter the command letter before each register test. Make certain to test all four sound registers.

> **NOTE: The television volume control may have to be turned up in order for you to hear the first three tones.**

Display Options

This function, which is not a test, displays a diagnostic matrix when used in conjunction with either the RAM TEST or the PORT TEST. It allows you to identify which ROM chip has failed when used with the VERIFY ROM TEST.

By pressing command letter **D** and **RETURN** you access this function. The screen returns the prompt to enter a test format. To use the PASS/FAIL indicator, enter the command letter **P** and press **RETURN.** To display the ERROR TABLE, enter the command letter **E** and press **RETURN.** For the following PORT, VERIFY ROM, and RAM TESTs, press the command letter **E** and **RETURN.** The screen prompts you to enter the command letter **S** for a single test, or **C** for continuous testing.

You are now ready for the three tests. To terminate any of the following three tests, press the **SPACE BAR.** NOTE: The RAM test completes its current test before stopping.

Port Test

This test verifies the ability of the computer system to communicate through the controller jacks and the peripheral I/O port.

The command letter **P** and **RETURN** activates this test. Make certain that the Peripheral Jumpers are in place, and press **RETURN** again. Figure 3-7 illustrates the Port Test Matrix Display. This figure is a black and white representation of a color television screen. The zeros should be a blue tint.

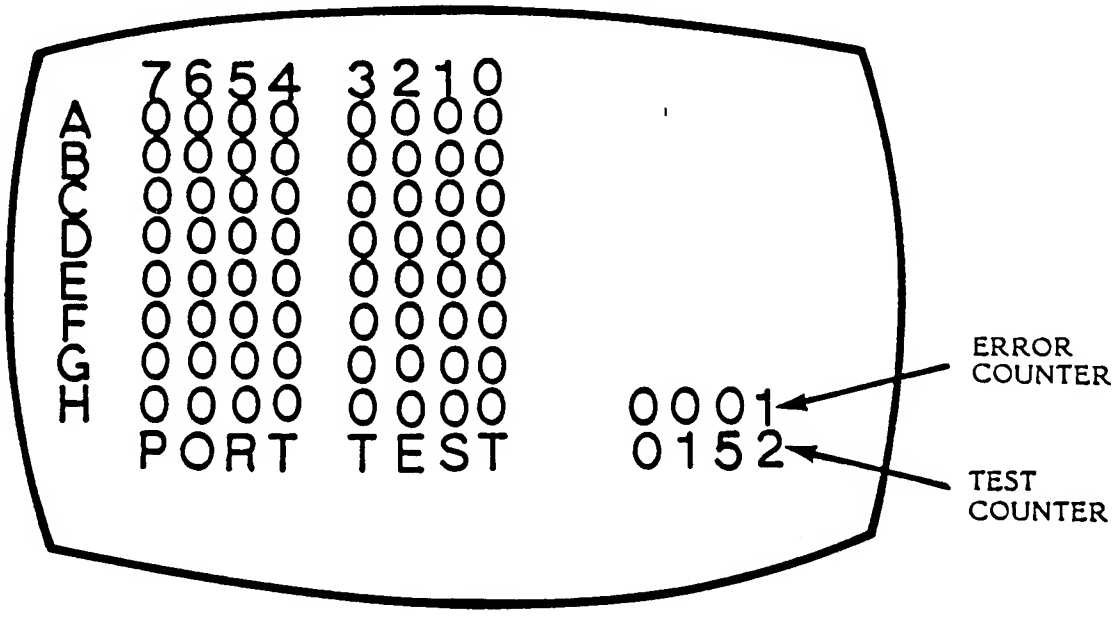

Figure 3-7. Port Test Screen

The four digit number in the lower-right corner of the display screen shows the number of tests completed. In addition, the four digit number above it in red is an error counter which indicates the number of times the test has failed.

If a failure occurs, a Red 1 is displayed in the matrix, this shows you the location of the errored condition. Table 3-1, Port Test Legend should be used to determine the cause of the failure condition. **(Please note, a blinking 1 at location A 5 does not indicate a failure.)**

A passing condition for all test is indicated by a 0 in that location (i.e., C0 or D4). If the failed test passes on the next pass, the 1 is replaced by a 0. The error counter in the lower-right corner of the screen increments by one for each error .

Verify ROM Test

This test checks the Console's ROMs by performing checksum tests on them. By entering the command letter **V** and pressing **RETURN** you activate this test. The screen displays a checksum for each ROM and the value returned by the MATH PACK together with a PASS or FAIL indicator for each. Upon completion of the test, the screen displays **VERIFY ROM** and either **PASS** or **FAIL** for the entire test. This test can be used to pinpoint which ROM is failing. If you suspect a ROM is intermittently failing; run this test for 15 or 20 minutes.

RAM Test

This automatically uses six different tests to verify the operation of the RAM boards. Enter the command letter **R** and press **RETURN** to begin this test. A prompt is returned to the screen asking how many 8K blocks of memory to check (maximum of five). Type the number of memory blocks in the unit and press **RETURN.** (Remember that, 1 equals each 8K RAM card and 2 equals each 16K RAM.)

The computer displays the amount of RAM it is testing. If the amount is not what you entered, one of two conditions may exist: 1) the unit does not contain the amount of memory you thought it did; or, 2) the unit has defective RAM card(s).

Figure 3-8 illustrates a defective RAM test system response screen. The four digit number in white at the bottom right of the screen indicates the number of tests completed. A red four digit number directly above this is used to count the number of failures.

Table 3-1

Port Test Legend

1
A
2
3
B
C
D
4
N
M
R
P
16
T
S
U
17
18
15
H
9
12
L
K
J
11
10
F
E
8
7
6

5
13
21
Y
19
W
20
X
22
Z

A
B
C
D
E
F G
H
I
J
K
L
M
N O
P Q
R
S
T
U V
W
X
Y
Z

14
G
I
O
Q
V
~~W~~

26
5
21

14 ~~[illegible]~~ used

1 ✓
✓ A ✗
2 ✓
3 ✓
✓ B ✗
✓ C ✗
✓ D ✗
4 ✓
✓ N ✗
✓ M ✗
✓ R ✗
✓ P ✗
16 ✓
✓ T ✗
✓ S ✗
✓ U ✗
17 ✓
18 ✓
15 ✓
✓ H ✗
9 ✓
12 ✓
✓ L ✗
✓ K ✗
✓ J ✗
11 ✓
10 ✓

5 ✓
13 ✓
21 ✓
✓ Y ✗
19 ✓
✓ W
20 ✓
✓ X ✗
22 ✓
✓ Z ✗

A ✓
B ✓
C ✓
D ✓
E ✓
F ✓
G
H ✓
I ✓
J ✓
K ✓
L ✓
M ✓
N ✓
O ✓
P ✓
Q ✓
R ✓
S ✓
T ✓
U ✓
V ✓
W ✓
X ✓
Y ✓
Z ✓

14
G ✓
I ✓
O ✓
Q ✓
V ✓
~~W~~ ✓

26
5
21

14 ~~[illegible]~~ used

CO 14795

18-19

39-40

18 Hi-pulse
19 Hi-pulse
39 Hi pulse
40 Hi pulse

As was the case with the PORT Test, failures appear as Red 1s in this display. If the pattern is in a state of constant change, one of the RAM boards probably has a set of defective 74LS158 chips. **If you replace the chips make certain that the new chips have the same manufacturer and the same date code.** This ensures compatibility. To determine which board(s) is(are) defective, perform the following three steps:

1) Turn off the power.

2) Remove one of the boards.

3) Start the test from Display Options, page 3-10.

If the pattern is stable, look at line B, Columns 4 thru 7 to determine which board is defective. (See Table 3-2).

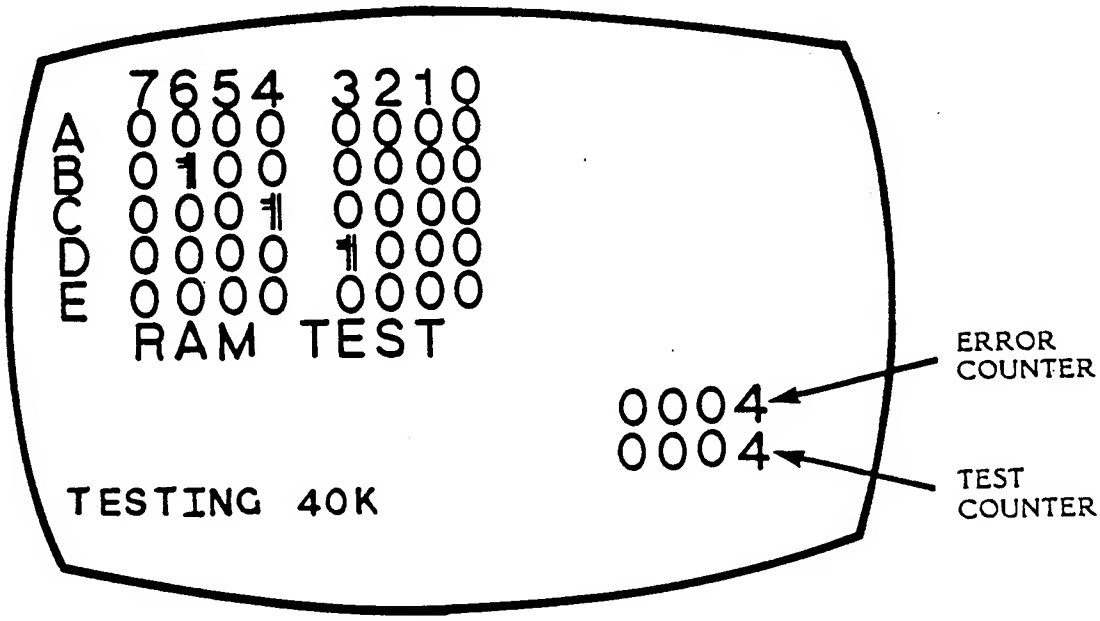

Figure 3-8. RAM Test Screen

Table 3-2

Defective RAM Boards

Defect	
Indicator	Description
B4	1st 8K Block
B5; or B4 and B5	2nd 8K Block
B6; or B4 and B6	3rd 8K Block
B5 and B6; or B4, B5 and B6	4th 8K Block
B7; or B4 and B7	5th 8K Block

Compare rows D and E, if there is a difference between any one column use Table 3-3 to identify specific defective chips. If more than one column is different replace the 74LS244 chip and retest.

Table 3-3

Defective RAM Identifier

Difference		
Column	Description	
	8K	16K
D0	Z512	Z512
D1	Z511	Z511
D2	Z510	Z510
D3	Z508	Z509
D4	Z509	Z508
D5	Z507	Z507
D6	Z505	Z506
D7	Z506	Z505

M Test

This test verifies the proper operation of the Video Buffer Chip (400-A111 and 800-A103).

To perform this test, turn off the Console POWER, remove the SALT II cartridge and insert the BASIC cartridge. Turn the POWER on and perform the following three entries:

1) Type: **NEW** and press **RETURN.**

2) Type: **10?"M"; :GOTO 10** and press **RETURN.**

3) Type: **RUN** and press **RETURN.**

The system starts printing Ms, character after character, line after line. If any are blurred and/or run together, the Video Buffer Chip or another of the discrete components in the video summing circuitry on the mainboard is probably defective.

To stop this test, press **BREAK** or **SYSTEM RESET.**

STAR RAIDER™ Test

If the Console has effectively passed all previous tests and performs this game without any visible problems, it is almost certainly operating properly.

Turn POWER off, remove the BASIC cartridge, insert the STAR RAIDER™ cartridge, and turn the POWER on. Now, go through the game's various screens and functions (play the game).

Shake Test

Grasp the unit firmly with both hands and shake it vigorously for approximately 10 to 20 seconds. DO NOT HIT or STRIKE the unit against the bench or other hard object without having your fingers between the unit and the surface being struck. Perform the MEMO PAD test to make certain that none of the connections, boards, and/or components have become unseated, and that the unit is properly operational.

Burnin

After the unit has successfully passed all the previous procedures and is operating correctly, it is ready for burnin

Burnin consists of operating the system continuouisly for a long period of time (recommended 8 hours). Use one of the following three methods.

1) Insert the SALT II cartridge and run it with continuous RAM or PORT test.

2) Insert Star Raider™ or another game cartridge and run it.

3) Perform the 400/800 Console Test (810 Disk Drive required).

At the end of the BURN-IN period, check the unit again for any malfunctions, using SALT II Test checks. Once the unit has passed all the final checkout procedures, it is ready to be returned to the customer.

DESCRIPTION OF THE OTHER FUNCTIONS FOLLOWS:

Production Test

Command letter **"Z"**. This function allows you to run through the series of test semi-automatically by pressing the space bar. It will ask you the serial number of the unit and print it out on a printer with the word **PASS** or **FAIL.**

Boot B

This function is not used at this time.

Examine

Command letter **"E"**. This allows you to test a specified RAM location (address).

Adjust

Command letter **"J"**. This is used to debug audio and serial port control lines (Motor Go & Command) on the system console. A fixed frequency audio signal is produced while PIA ports are exercised.

SUMMARY

This section has taken you step-by-step through all the tests and general troubleshooting steps required for evaluation of a suspect defective 400/800 console. Now read through the section, DISASSEMBLY and ASSEMBLY, before going on to Section 5, Diagnostic Flowcharts, and Section 7, 800 Diagnostic Flowchart.

SECTION 4

DISSASSEMBLLY/ASSEMBLY MAINTENANCE

ATARI 400 HOME COMPUTER CONSOLE - DISASSEMBLY

The following describes the procedures required to disassemble the 400 Computer Console. Read the following NOTES first, then proceed.

*** * * NOTE * * ***

1. **Be very careful about mixing screws. Plastic and aluminum parts can be easily stripped or damaged by puncture if the wrong size screw is used.**

2. **Excessive torque on screws can strip the plastic and aluminum parts.**

   - **Plastic - 6-inch pounds torque maximum.**
   - **Aluminum - 10-inch pounds torque maximum.**

3. **Protect the plastic surfaces of the console by working on a soft surface (a grounding pad works very well) when the Console is turned over, bottom up.**

4. **Use ALL static control precautions when handling any printed circuit board.**

KEYBOARD AND POWER SUPPLY ACCESS

To remove the top cover, perform the steps in the exact order given.

- Turn the unit side down.
- Remove four screws from the bottom cover (See Figure 4-1).

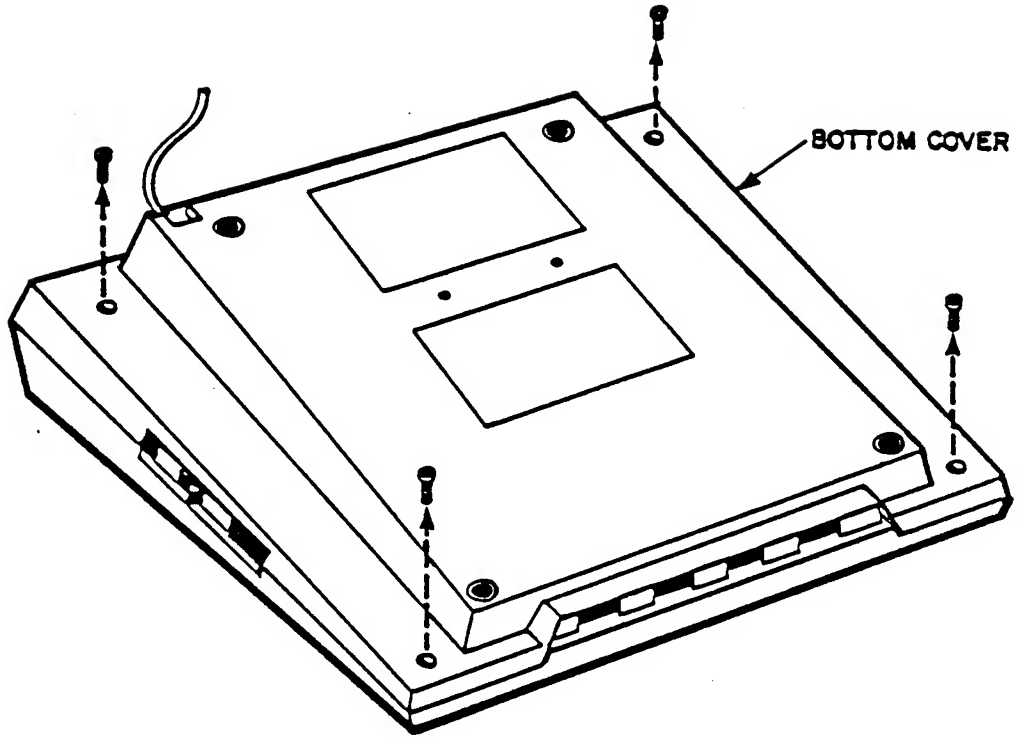

Figure 4-1. ATARI 400 Console, Bottom Cover Screw Location

- Turn unit upright.
- Unhook top cover from keyboard (see Figure 4-2).
- Open cartridge door.
- Lift top cover off.

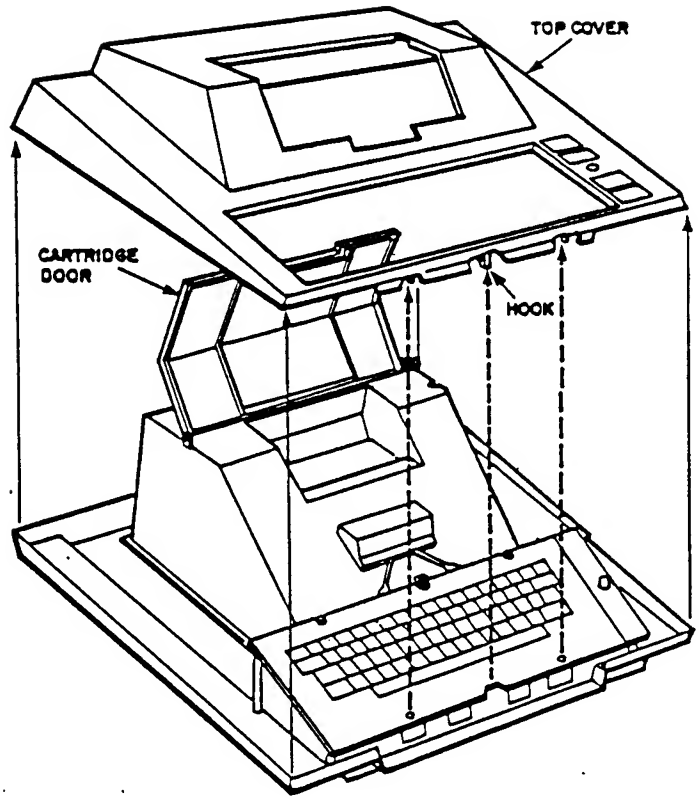

Figure 4-2. ATARI 400 Console Top Cover Removal

KEYBOARD REMOVAL

To remove the keyboard, perform the following steps in the exact order given. Use Figure 4-3 as a reference for the following two steps.

- Remove single keyboard screw.
- Lift left end of keyboard and disconnect keyboard ribbon cable.

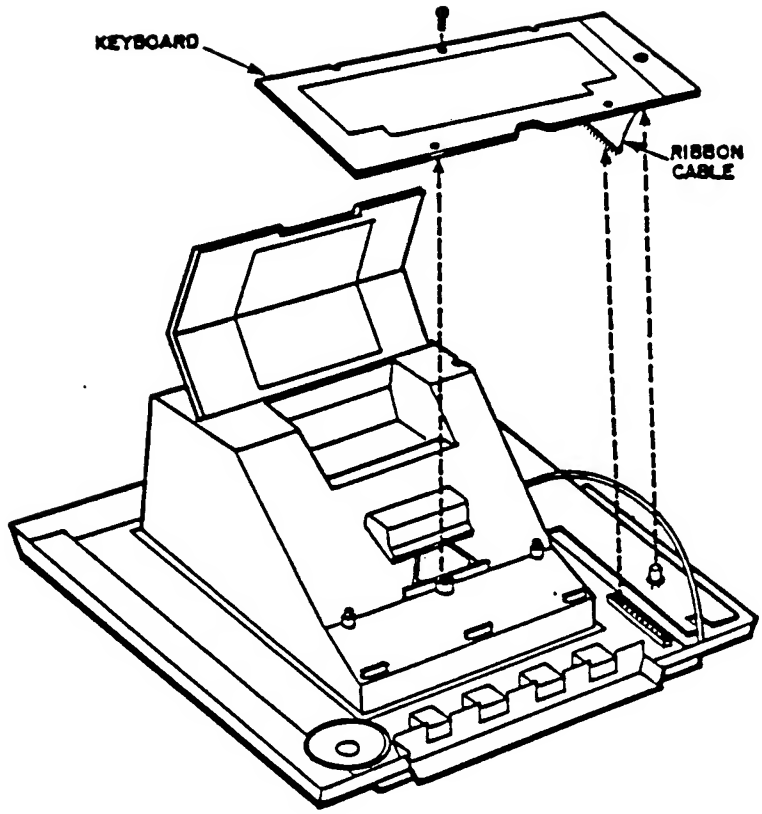

Figure 4-3. ATARI 400 Console, Keyboard Removal

POWER SUPPLY REMOVAL

To remove the power supply, perform the following steps in the exact order given. Use Figure 4-4 as a reference for the following four steps.

- Disconnect RF cable from power supply.
- Remove two screws from power supply.
- Gently pull power supply away from casting 1/4 inch and lift out the interlock switch plunger.
- Lift the power supply straight-up off the motherboard connector pins.

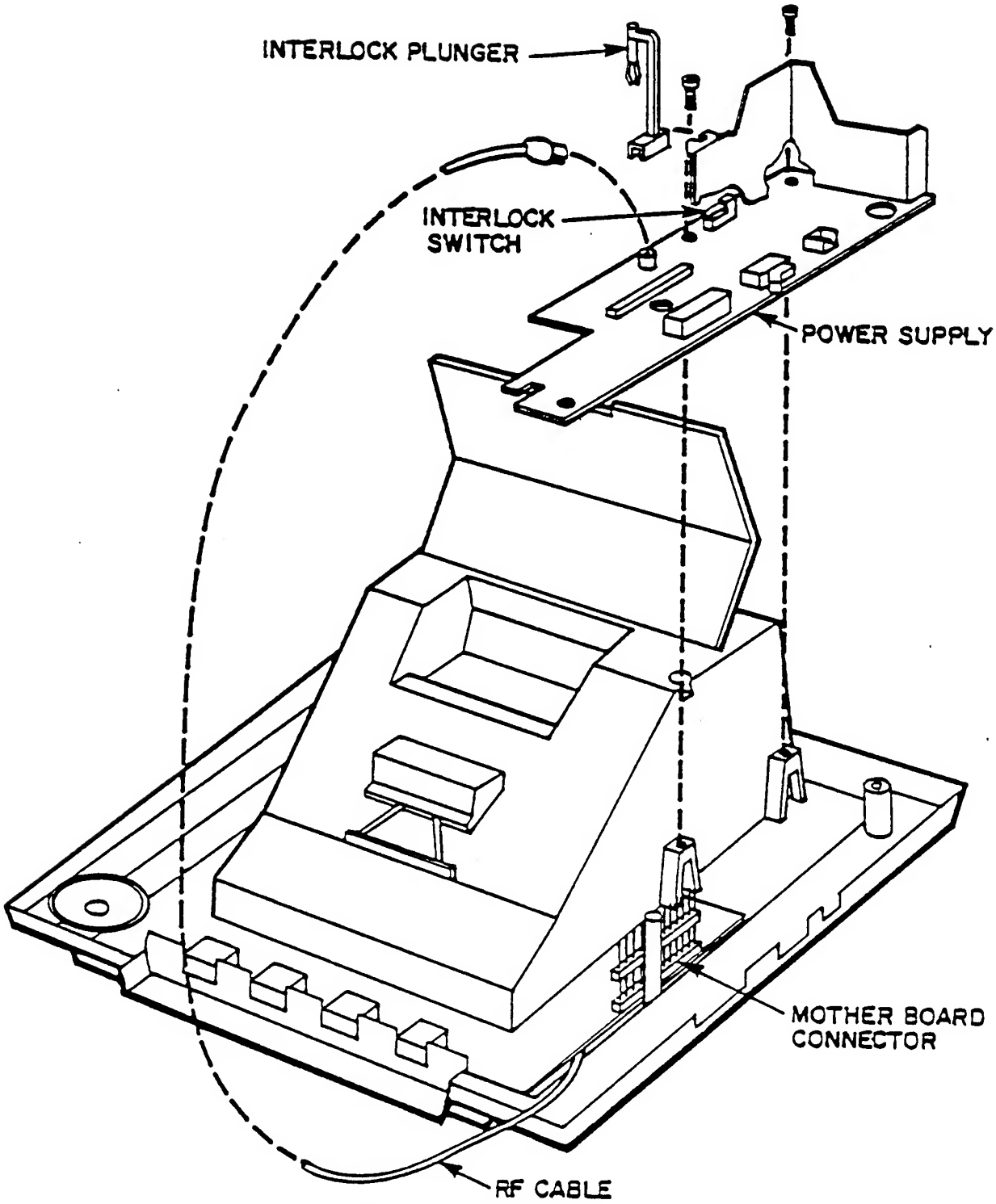

Figure 4-4. ATARI 400 Console, Power Supply Removal

CPU, RAM, AND MOTHERBOARD ACCESS

To remove the module assembly, perform the steps in the exact order given. Use Figure 4-5 as a reference for the following two steps.

- Disconnect and remove speaker assembly.
- Lift module assembly out of the bottom cover.

CPU AND RAM REMOVAL

To remove the CPU and RAM printed circuit boards, perform the steps in the exact order given. Use Figure 4-5 as a reference for the following six steps.

- Close and latch the cartridge door.
- Set the module on its back.
- Remove the eight screws from the bottom shield and lift off the shield.
- Lift the motherboard assembly out of the aluminum casting.
- Carefully unplug the CPU and/or RAM boards.
- Unhook and remove the plastic cartridge guide.

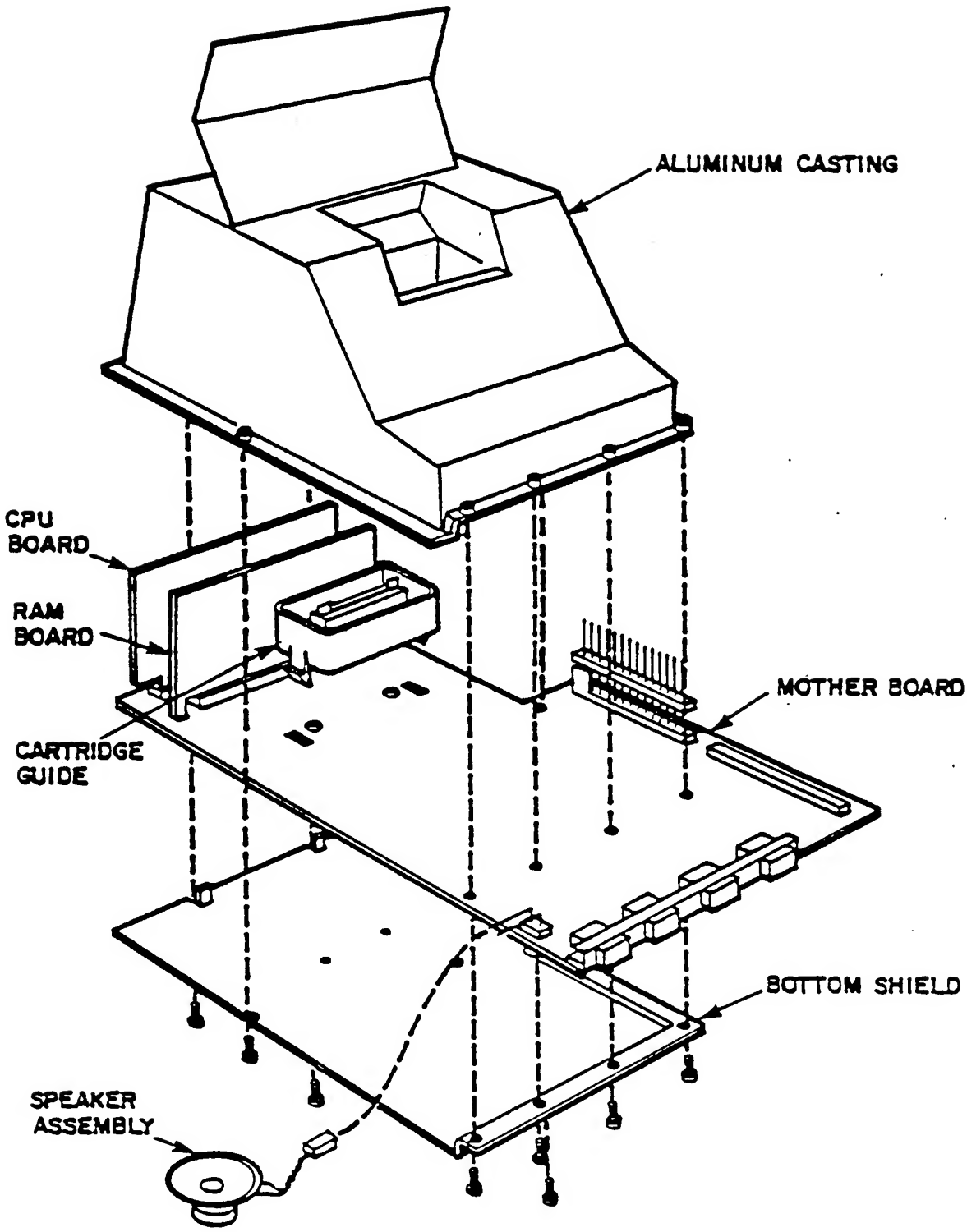

Figure 4-5. ATARI 400 Console, Module Assembly

This concludes the disassembly of the 400 computer console.

ATARI 800 HOME COMPUTER CONSOLE - DISASSEMBLY

The following describes the procedures required to disassemble the ATARI 800 Home Computer console. Read the NOTES on pages 4-1 thru 4- 3 first, and then proceed.

ACCESS TO RAM BOARDS AND ROM BOARD

To gain access to the RAM and ROM boards, perform the steps in the exact order given.

Remove the cartridge door assembly. Use Figure 4-6 as a reference for the following eight steps.

- Turn the system power switch to the OFF position.
- Open the cartridge door.
- Turn the cartridge door clamps towards the outside of the Console.
- Lift the cartridge door assembly 1/4 inch, pull it towards you, and lift it off.

Remove the RAM and ROM modules.

- Lift out the RAM module(s).
- Lift out the ROM module.
- Lift out any cartridge(s).
- Turn cartridge door clamps to original position.

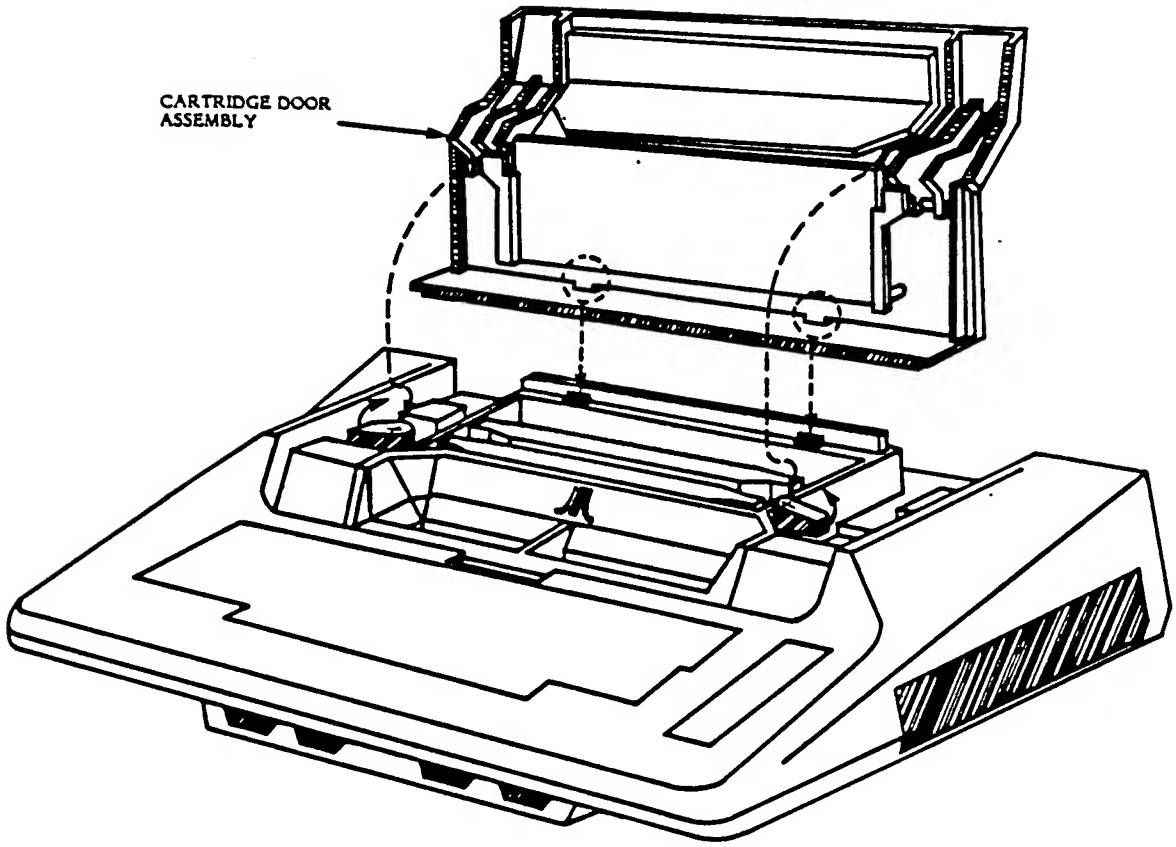

Figure 4-6. ATARI 800 Console, Cartridge Door Assembly Removal

ACCESS TO POWER SUPPLY AND KEYBOARD ASSEMBLY

To gain access to the power supply and keyboard assembly, perform the following steps in the exact order given.

REMOVE TOP COVER

Use Figure 4-7 as reference for the following three steps.

- Turn unit upside down.
- Remove five screws from the bottom cover.
- Tilt the back of the bottom cover up and towards you to remove it.

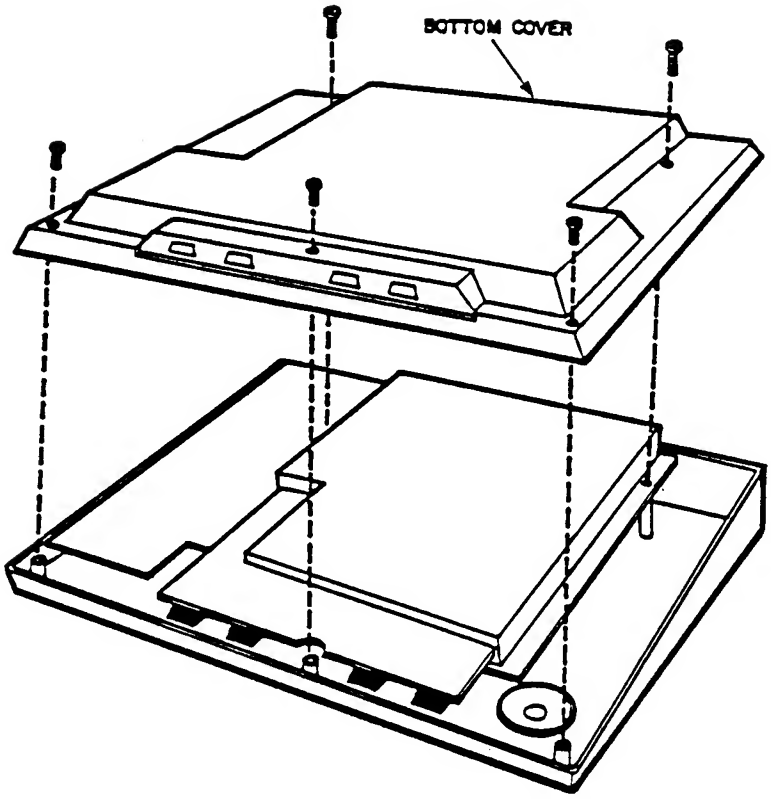

Figure 4-7. ATARI 800 Console, Bottom Cover Removal

REMOVE THE PCB MODULE

Use Figure 4-8 as a reference for the following seven steps.

- Remove two screws from the aluminum casting flange.
- Remove the single screw from the power supply board (lower left corner).
- Disconnect speaker cable, remove speaker and set it aside.
- Turn the unit over.
- Carefully pull the back of the console top cover assembly to 90° separating it from the PCB module.

- Reach over the top cover and unplug the keyboard's ribbon cable.
- Set the top cover assembly aside.
- Lift the power supply board straight up.
- Remove plastic cartridge guide by unhooking the latches from the bottom side of the motherboard.

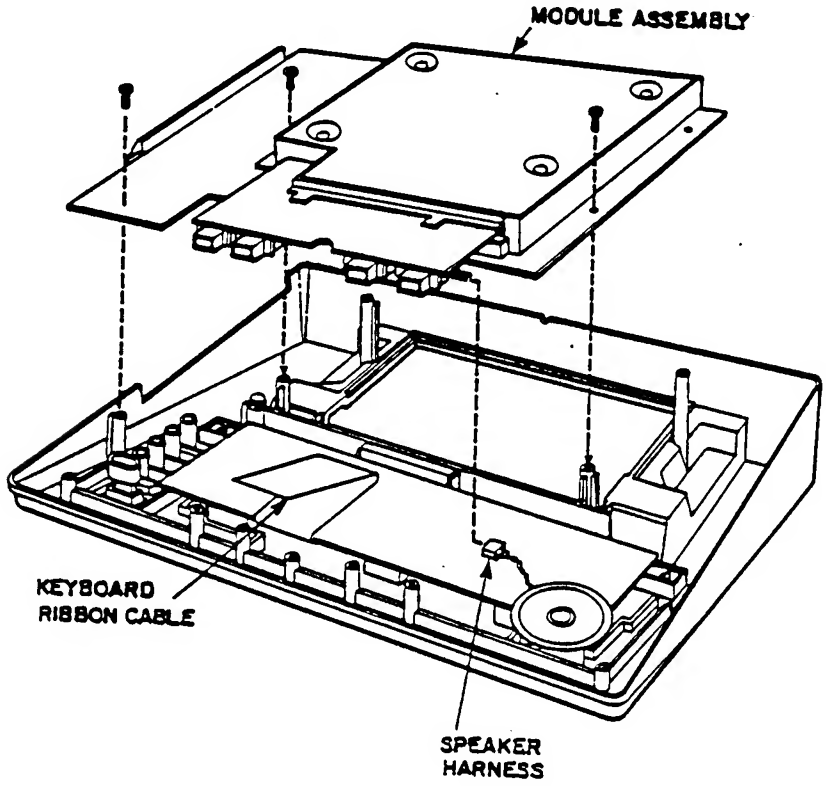

Figure 4-8. ATARI 800 Console, Module Assembly Removal

REMOVE THE POWER SUPPLY

Use Figure 4-9 as a reference for the following five steps.

- Unplug the RF cable from the power supply board.
- Unplug the power supply harness.
- Remove three screws from power supply board.

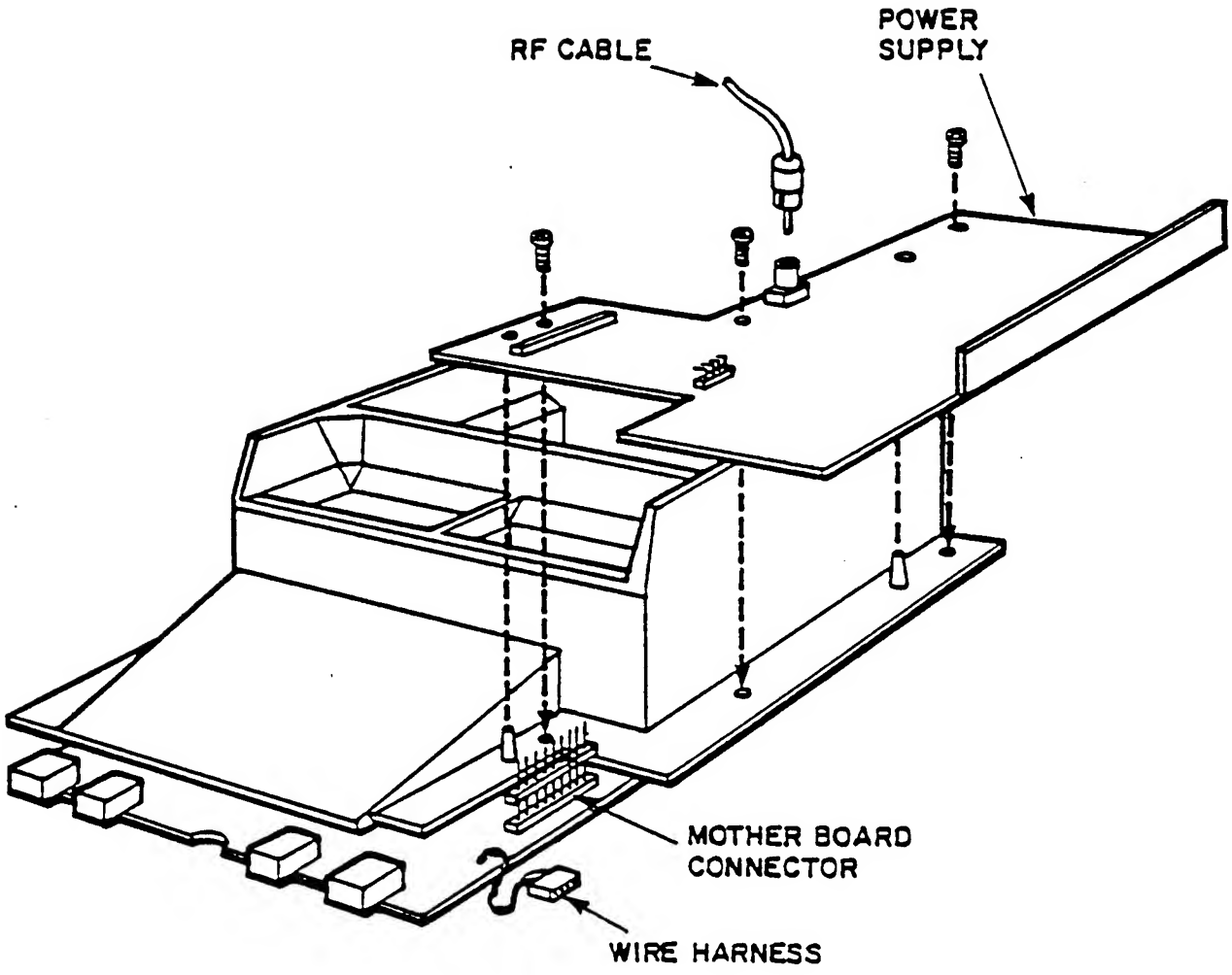

Figure 4-9. ATARI 800 Console, Power Supply Removal

ACCESS TO CPU PRINTED CIRCUIT BOARD

Use Figure 4-10 as reference for the following four steps.

- Turn the unit upside down.
- Remove the nine screws from the lower shield.
- Lift the motherboard and lower shield out of the aluminum casting.
- Remove the CPU PCB.

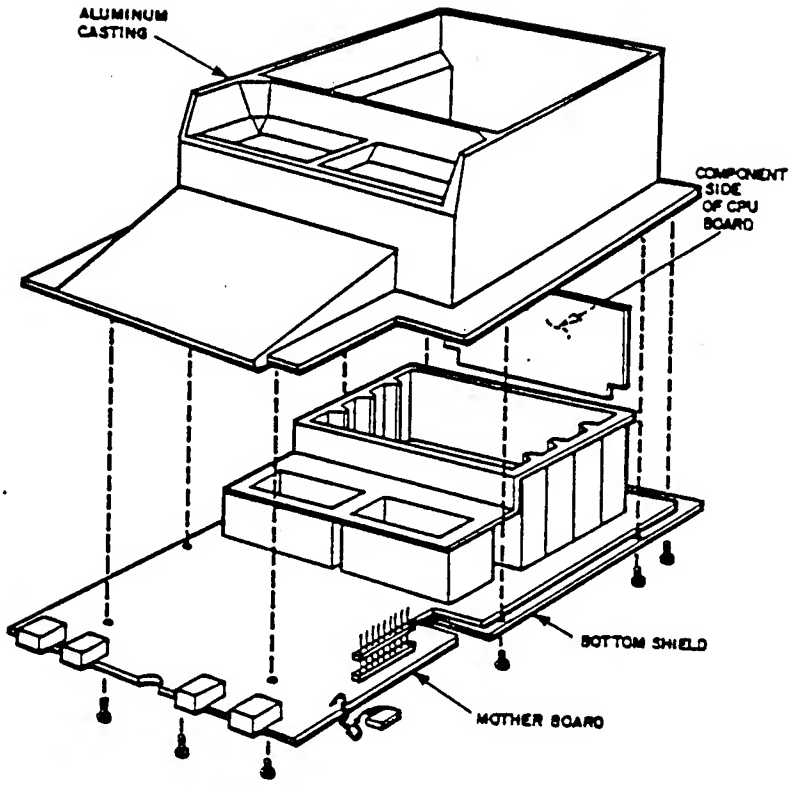

Figure 4-10. ATARI 800 Console, CPU Printed Circuit Board Removal

ACCESS TO MOTHERBOARD

Use Figure 4-11 as reference for the following three steps.

- Carefully slide the tip of a screwdriver underneath the motherboard next to the nylon clip. Gently raise the handle of the screwdriver, prying off the nylon clip. Repeat this operation for the remaining three nylon clips.

* * * CAUTION * * *

Be careful not to bend any of the pins on the Motherboard Connector.

Do NOT allow the tip of the screwdriver to damage traces.

- Lift the motherboard off the lower shield.
- Remove the plastic cartridge guide by unhooking the four latches from the bottom side of the motherboard.

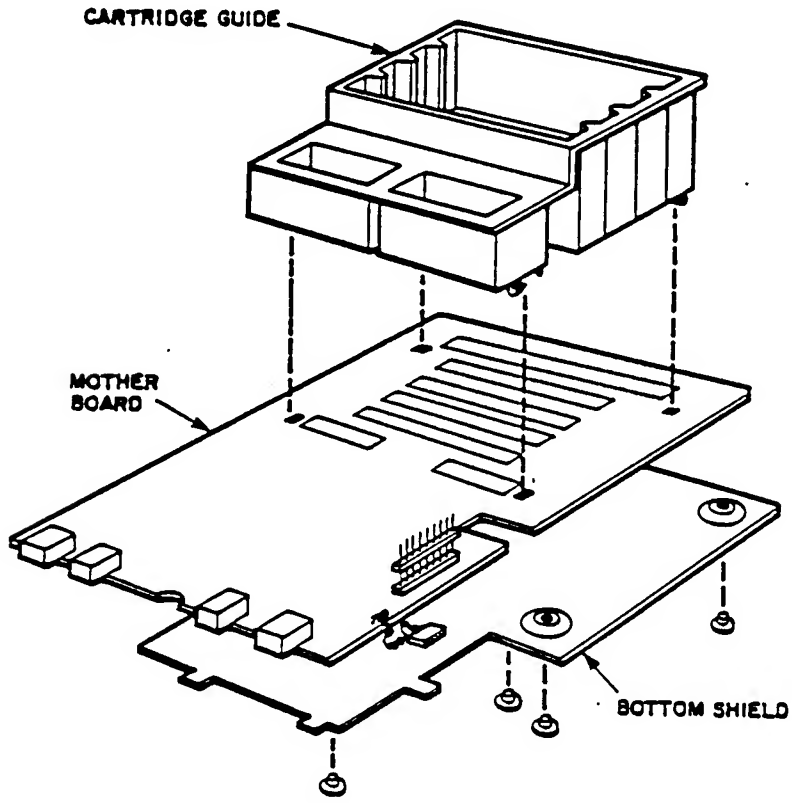

Figure 4-11. ATARI 800 Console, Motherboard Removal

KEYBOARD REMOVAL

Use Figure 4-12 as reference for the three steps, to remove the keyboard from its case.

- Turn the top cover upside down.
- Remove four screws from the four corners of the keyboard.
- Lift the keyboard out of the top cover.

This concludes the disassembly of the Atari 800 Home Computer console.

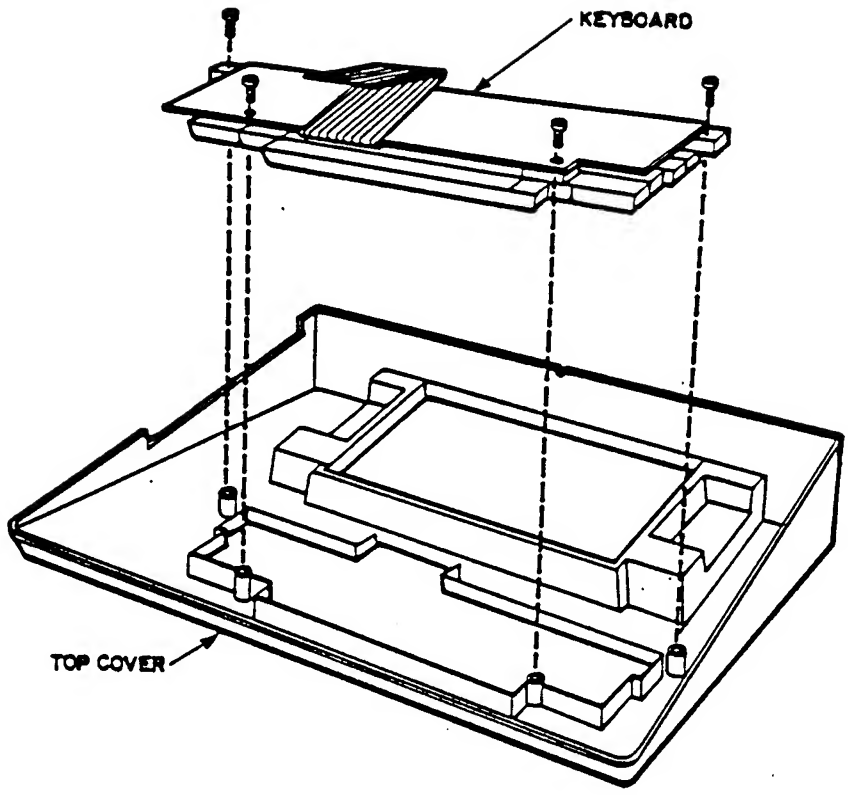

Figure 4-12. ATARI 800 Console, Keyboard Removal

ATARI 400 HOME COMPUTER CONSOLE ASSSEMBLY

The following outlines the steps required to reassemble the Atari 400 Home Computer console and it's related printed circuit boards.

MODULE ASSEMBLY REASSEMBLY

Refer to Figure 4-5 as reference for the following five steps.

- Snap the cartridge guide into the motherboard (it only goes in one way).
- Insert RAM and CPU printed circuit boards into the motherboard with the component side of the PCBs facing away from you. Before reassembling the PCBs, make certain that they have been cleaned and lubricated. (Refer to pages 4-21 and 4-22 for instructions.)
- Set aluminum casting upside down, invert the motherboard and gently lower it into the casting.

* * * NOTE * * *

The CPU PCB must fit into the guides in the aluminum casting.

- Install lower shield and secure it with eight screws.
- Install the module assembly in the bottom cover.

KEYBOARD INSTALLATION

Refer to Figure 4-3 as a reference for the following three steps.

- Plug the speaker cable into the motherboard (no Polarity) and set the speaker into the bottom cover.
- Plug the keyboard ribbon cable into the connector on the motherboard.
- Gently lower the keyboard over the Power-ON LED and guide posts on the aluminum casting.

POWER SUPPLY INSTALLATION

Use Figure 4-4 as reference for the following five steps.

- Align the power supply over the motherboard connector pins and bottom cover guide posts and gently press it down.
- Install the interlock switch plunger into the aluminum casting. Make certain that the lower end of the plunger is positioned over the interlock switch and the plunger shaft rides in its notch in the power supply heat sink.
- Insert and tighten the two power supply mounting screws.

* * * CAUTION * * *

Be sure that the RF cable is not trapped under the module assembly.

- Route the RF cable through its slot in the power supply board and plug it into the power supply jack.
- Insert and tighten the single keyboard mounting screw.

TOP COVER INSTALLATION

- Open the cartridge door.
- Slide the top cover down over the open cartridge door and the power-ON LED (Refer to Figure 4-2).
- Guide the top cover locator pins into the keyboard holes and snap the top cover hood under the keyboard.
- Close the cartridge door and set the console on its face.
- Align the top and bottom covers and insert the four screws into the bottom cover and tighten (Refer to Figure 4-1).

ATARI 800 HOME COMPUTER CONSOLE ASSEMBLY

The following outlines the steps required to reassemble the Atari 800 Home Computer Console and its related printed circuit boards.

KEYBOARD INSTALLATION

Refer to Figure 4-12 as reference for the following two steps.

- Set the top cover upside down with the keyboard in it.
- Insert and tighten the four mounting screws.

*** * * NOTE * * ***

Check the spacebar and keys to make sure that they are not binding before proceeding.

MOTHERBOARD INSTALLATION

Refer to Figure 4-11 as reference for the following two steps.

- Snap the plastic cartridge guide into the top side of the motherboard.
- With the motherboard right side up, snap on the four nylon clips of the lower shield. Make certain all four clips are firmly seated.

CPU PCB INSTALLATION

Refer to Figure 4-10 as reference for the following five steps.

- Plug in CPU PCB. Make certain the component side of the board faces away from the plastic cartridge guide and is firmly seated.
- Turn the aluminum casting over.
- Turn the motherboard upside down and set the motherboard and lower shield into the aluminum casting.

* * * CAUTION * * *

Make certain that the CPU PCB sets in its slot in the aluminum casting.

- Insert and secure the nine screws in the lower shield.
- Set the console on its feet.

POWER SUPPLY INSTALLATION

Refer to Figure 4-9 as reference for the following six steps.

- Carefully align the power supply connector with the motherboard pins.
- Set the power supply down over the guide pins on the aluminum casting and gently press down.
- Attach strip connector between power supply and motherboard.
- Insert and tighten the three screws of the power supply board.
- Recommend the power supply harness.

* * * CAUTION * * *

Plug the power supply harness cable from the motherboard to the power supply pins with the orange or purple wire towards the aluminum casting.

- Plug the RF cable, the short end, into the power supply jack.

MODULE ASSEMBLY INSTALLATION INTO TOP COVER

Refer to Figure 4-8 as reference for the following six steps.

- Set the top cover upside down.
- Invert the module assembly and lower it into the top cover. Turn the cartridge door latches toward the inside in order to clear the top cover.

*** * * CAUTION * * ***

Make certain that the RF cable is not trapped between the power supply board and the top cover standoff (upper left screw hole).

- Lift the motherboard one-inch out of the top cover and plug in the keyboard harness.
- Insert and tighten two screws into the front holes of the aluminum casting and into the top cover.
- Set the speaker into its receptacle foam side down.
- Connect the speaker cable to the jack (no polarity).

BOTTOM COVER INSTALLATION

Refer to Figure 4-7 as reference for the following four steps.

- Align the bottom cover with the four-hand-controller ports.
- Seat bottom cover firmly, all the way around. Make certain the RF cable exists through its hole and is not trapped between the covers.
- Insert and tighten the five bottom cover screws.
- Set the console right side up.

RAM AND ROM MODULE INSTALLATION

Refer to Figure 4-6 as reference for the following two steps.

- Insert the ROM Module in the slot closest to the keyboard.
- Insert a maximum of three RAM modules in the remaining slots.

CARTRIDGE DOOR ASSEMBLY

Refer to Figure 4-7 as reference for the following two steps.

- Set the cartridge door assembly on the top cover and slide it to the rear of the cover. This action engages the tab of the door into the aluminum casting.

- Lock the cartridge door assembly down with the two clamps next to the program cartridge slots.

PCB CONTACT CLEANING AND LUBRICATION

The following instructions explain the procedures required to properly clean and lubricate the PCB contacts of the CPU, RAM and ROM boards once they have been removed from the motherboard.

Tools Required

- ZEP Safety Solvent or Isopropyl Alcohol
- Dust-Free Cloth
- Acid Brush
- Board Cleaning Brush
- Libriplate (DS-ES Lubricant)

Procedures

1. Inspect the PCB contact for flux, dirt, foreign material, and deeply serated contact fingers.

2. Moisten the dust-free cloth with solvent and clean the finger contacts. Make sure both sides of the contacts are clean and free of residual lubricant and contamination.

* * * NOTE * * *

Avoid touching the contact after cleaning.

3. If corrosion or residue remain on the contacts it is necessary to clean the contacts further using the board cleaning brush. Use the following procedures.

   - Moisten the board cleaning brush with solvent and firmly brush the contacts. Four to six strokes is enough. Be careful and do not touch any other part of the board.
   - Perform step 2 again.

4. Dip the acid brush into the lubricant.

5. Apply an even coating of lubricant to the contact fingers on both sides of the PCB. The coating of lubricant should be thick enough to protect the contact fingers from corrosion. Do not spread the lubricant to areas other than the contact fingers.

VISUAL INSPECTION

The following instructions explain specific areas to check on the Consoles for damage or abuse.

1. Inspect the controller jacks and peripheral jacks for broken and/or bent pins.

2. Check the RF cable for cracks in the insulation, bare, or pinched areas.

3. With the console power ON and MEMO PAD on the screen, open the cartridge door to check the interlock switch. Using a small blade screwdriver, press the plunger down. Release the plunger and see that it is returns to its open position. In its open position the console is powered-down.

4. Inspect the cartridge slot for foreign objects or damage.

5. Inspect the power jack for bent and/or damaged pins.

If any of the above damage is found, repair the defective area. Use the disassembly and assembly instructions at the beginning of this section.

SECTION 5

400 DIAGNOSTIC FLOWCHART

The Diagnostic Flowchart is intended to be easy to use and the primary aid when troubleshooting the ATARI 400 Computer Console. Follow the prompts in the order presented. When a question is asked, follow the line from that box which best applies to the unit's situation. The flowchart leaves little to chance, it tells you when to perform a specific test and when to replace components.

Swap Out Procedure

At many places in the diagnostic flowchart, a box tells you to "swap-out" a chip or a number of chips in a particular order. The "swap-out" instruction means that you should replace the indicated components (one at a time) with a known good component of the same type. The 400 should then be tested with the new, known-good component in place to see whether the "swap-out" solved the problem being checked. If the swap-out did not fix the problem, the known-good component should be removed, and the original component reinserted. In this way, you avoid needlessly replacing good components.

CAUTION:

Extreme care should be taken when handling the integrated circuit chips. They are all very sensitive to static electricity and can easily be damaged by careless handling. Always keep the chips in their plastic carrier tubes or on conductive foam when not handling them. Make certain you are well grounded when handling the chips. Atari strongly recommends that you wear a conductive grounding band (which ties from your arm to ground) when handling the chips.

The chips are also susceptible to damage from stress when being removed from or inserted into the sockets. Always use a chip-puller when removing the chips. Do not pry the chip out with a screwdriver or any other tool.

Failure to follow the above guidlines results in unusally high chip failure rates and extra expense.

400 POWER-UP

CATASTROPHIC FAILURES AND BASIC OPERATIONS

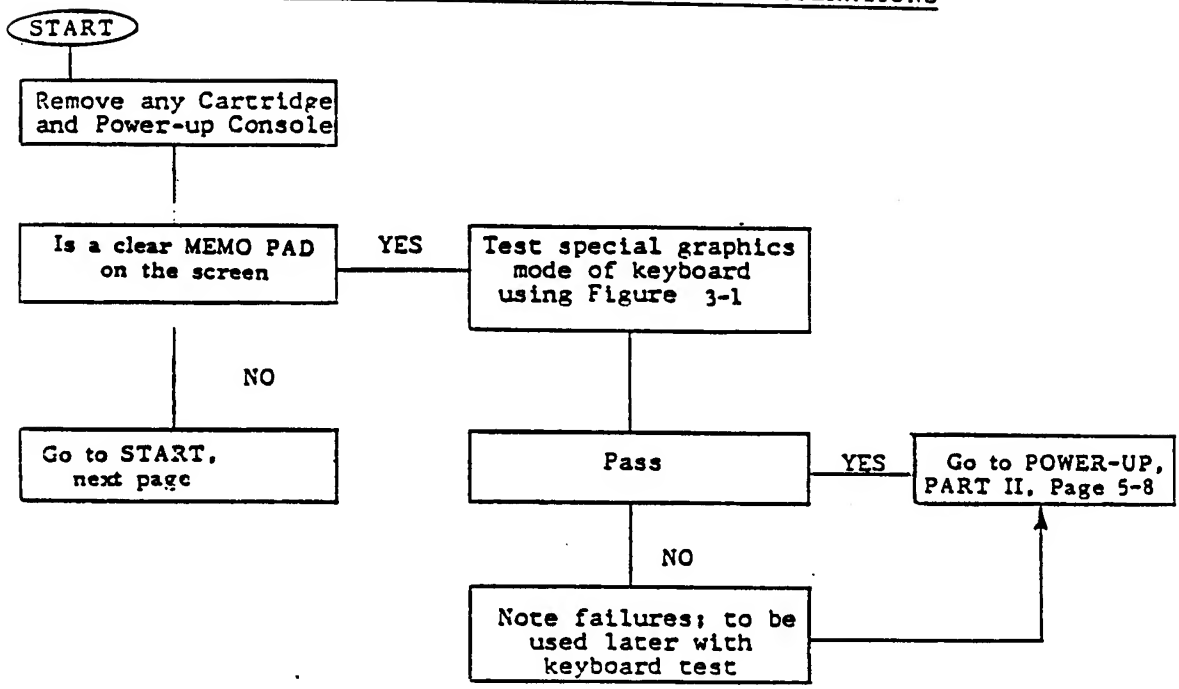

400 POWER-UP
CATASTROPHIC FAILURES AND BASIC OPERATIONS
SNOWY SCREEN

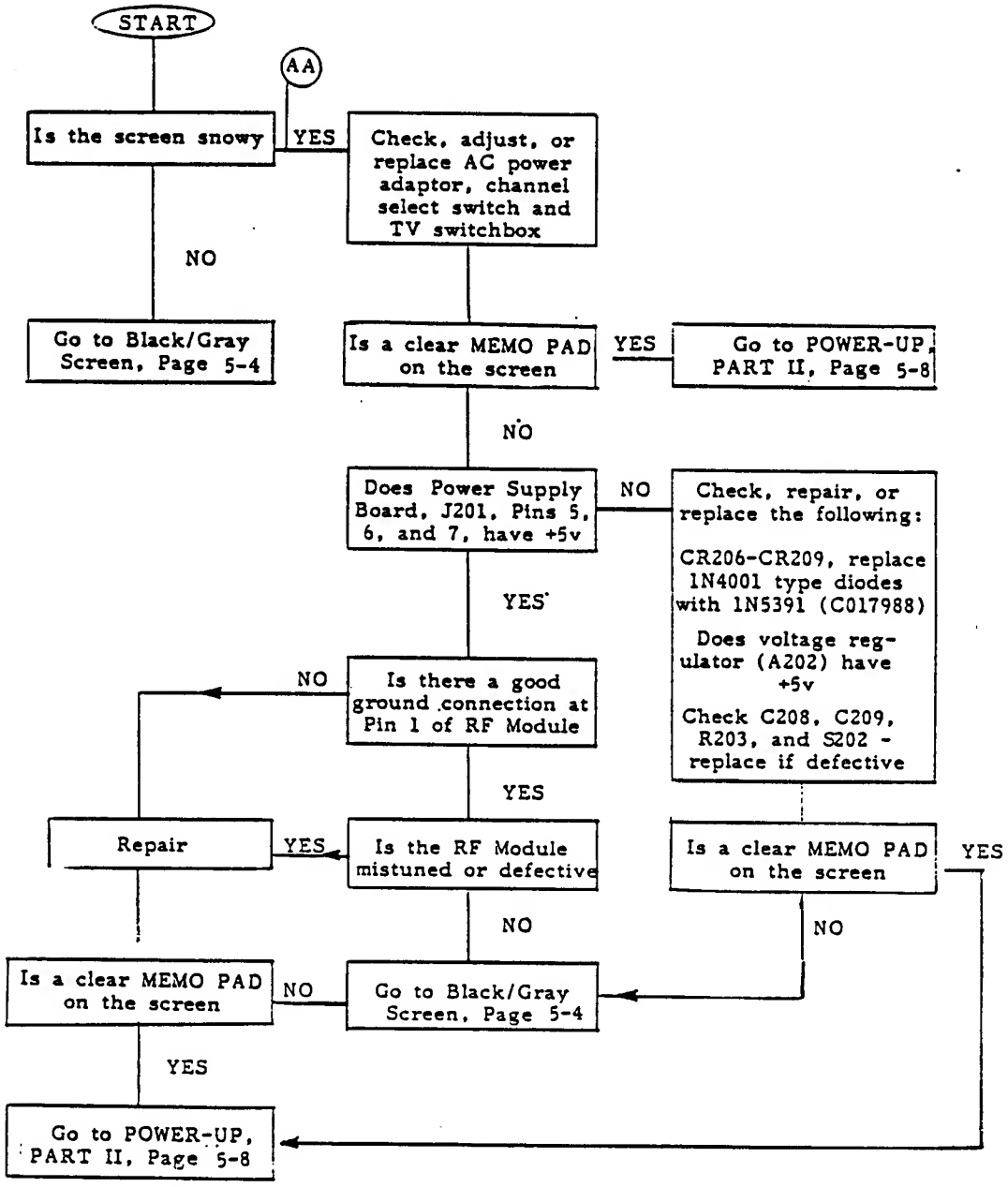

400 POWER-UP
CATASTROPHIC FAILURES AND BASIC OPERATIONS
BLACK/GREY SCREEN

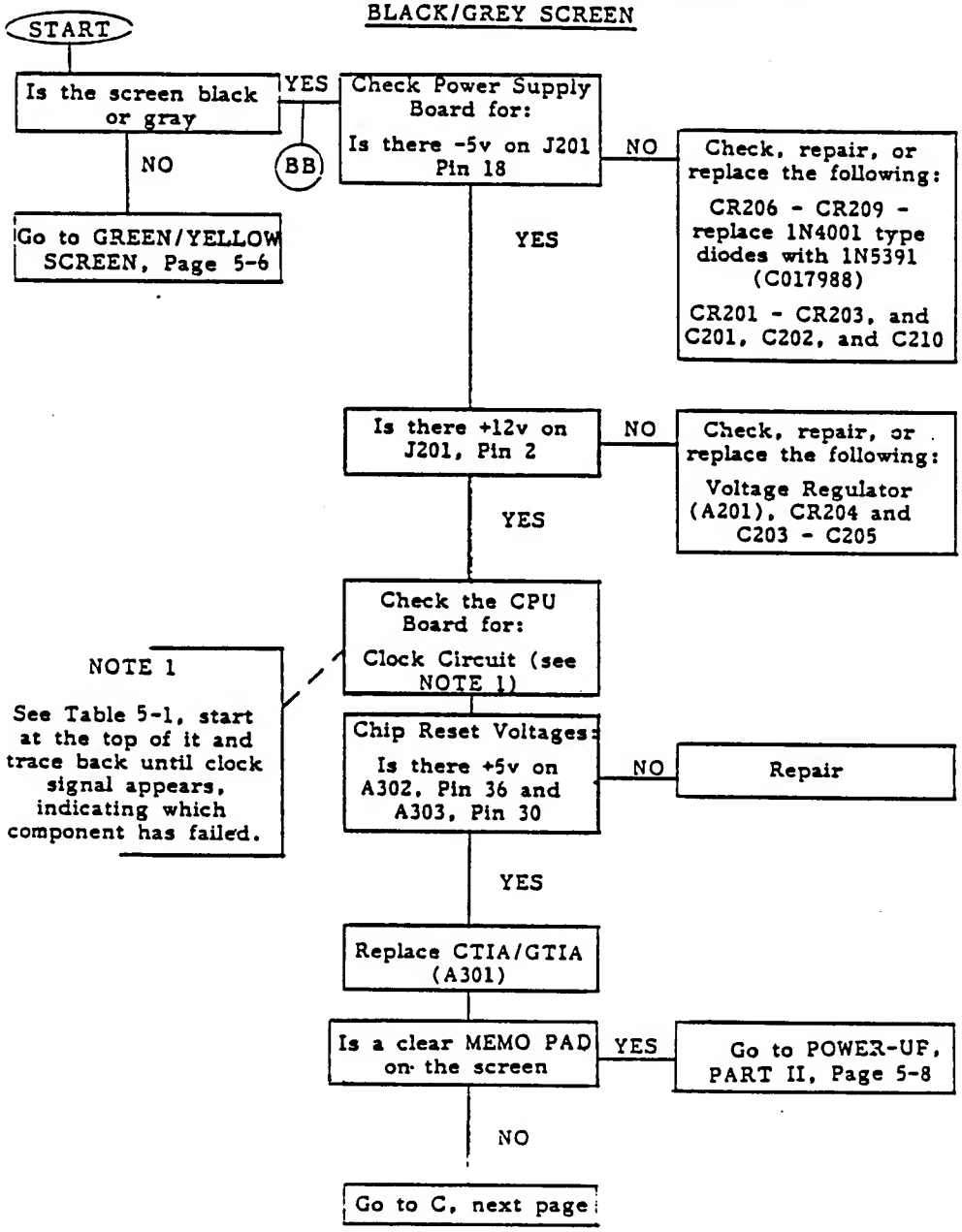

400 POWER-UP

CATASTROPHIC FAILURES AND BASIC OPERATIONS

BLACK/GREY SCREEN(cont)

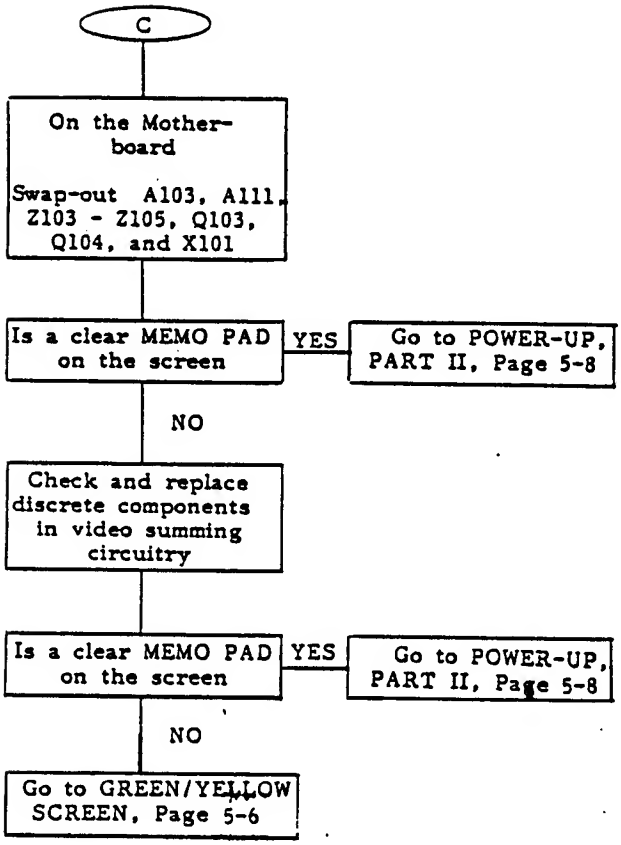

400 POWER-UP

CATASTROPHIC FAILURES AND BASIC OPERATIONS

GREEN/YELLOW SCREEN

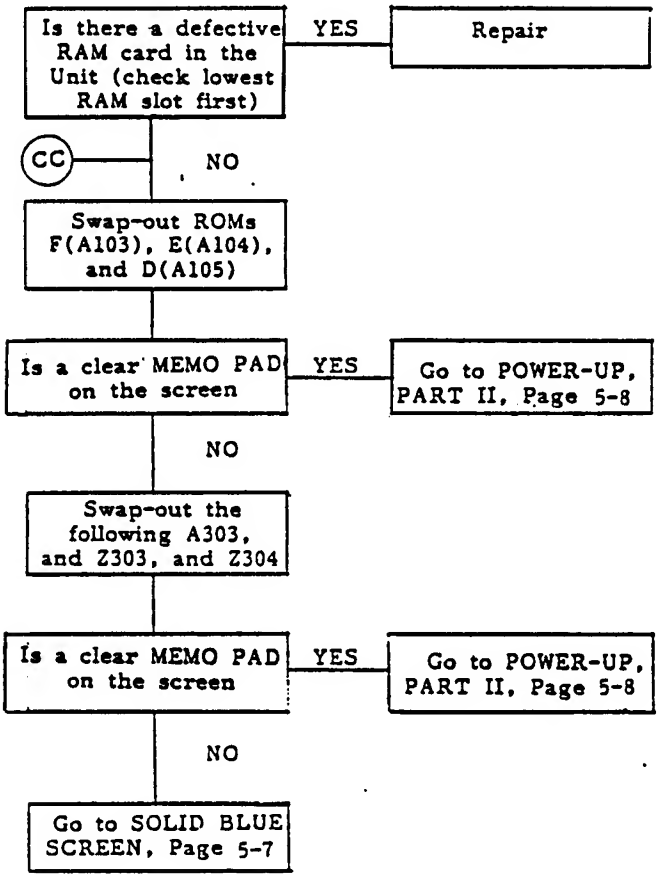

400 POWER-UP
CATASTROPHIC FAILURES AND BASIC OPERATIONS
SOLID BLUE SCREEN

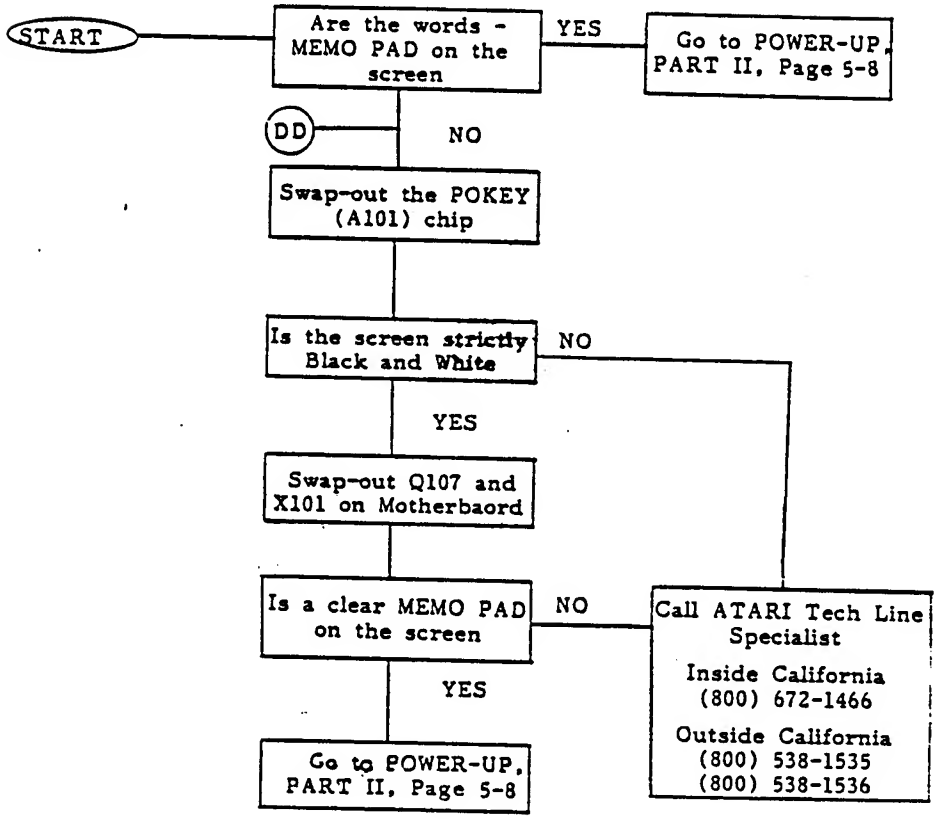

400 POWER-UP, PART II

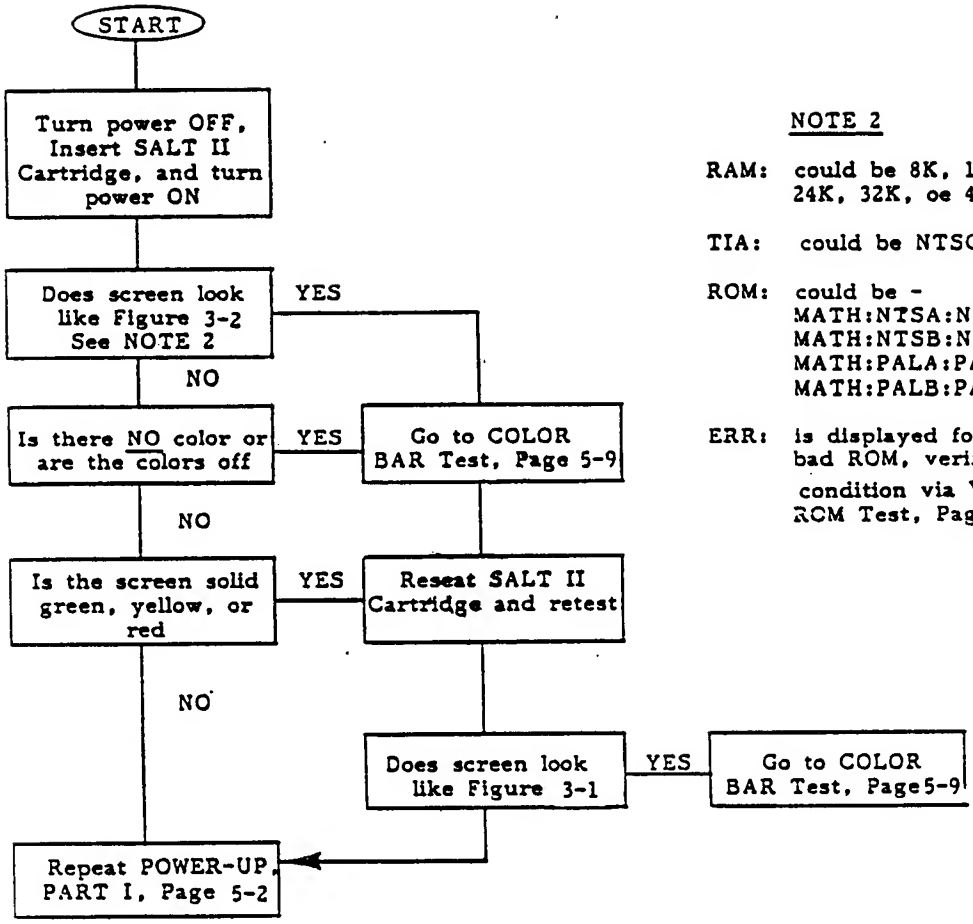

NOTE 2

RAM: could be 8K, 16K, 24K, 32K, oe 40K

TIA: could be NTSC or PAL

ROM: could be -
MATH:NTSA:NTSA
MATH:NTSB:NTSB
MATH:PALA:PALA
MATH:PALB:PALB

ERR: is displayed for any bad ROM, verify error condition via VERIFY ROM Test, Page 5-

COLOR BARS

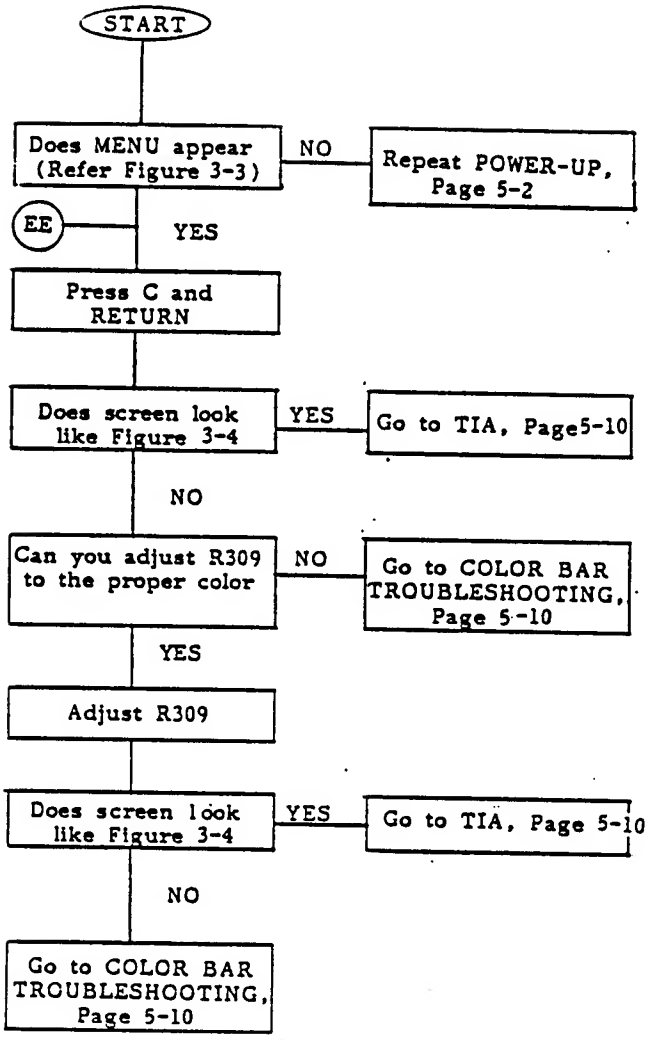
START
Does MENU appear (Refer Figure 3-3)
NO
Repeat POWER-UP, Page 5-2
EE
YES
Press C and RETURN
Does screen look like Figure 3-4
YES
Go to TIA, Page5-10
NO
Can you adjust R309 to the proper color
NO
Go to COLOR BAR TROUBLESHOOTING, Page 5-10
YES
Adjust R309
Does screen look like Figure 3-4
YES
Go to TIA, Page 5-10
NO
Go to COLOR BAR TROUBLESHOOTING, Page 5-10

400 COLOR BAR TROUBLESHOOTING

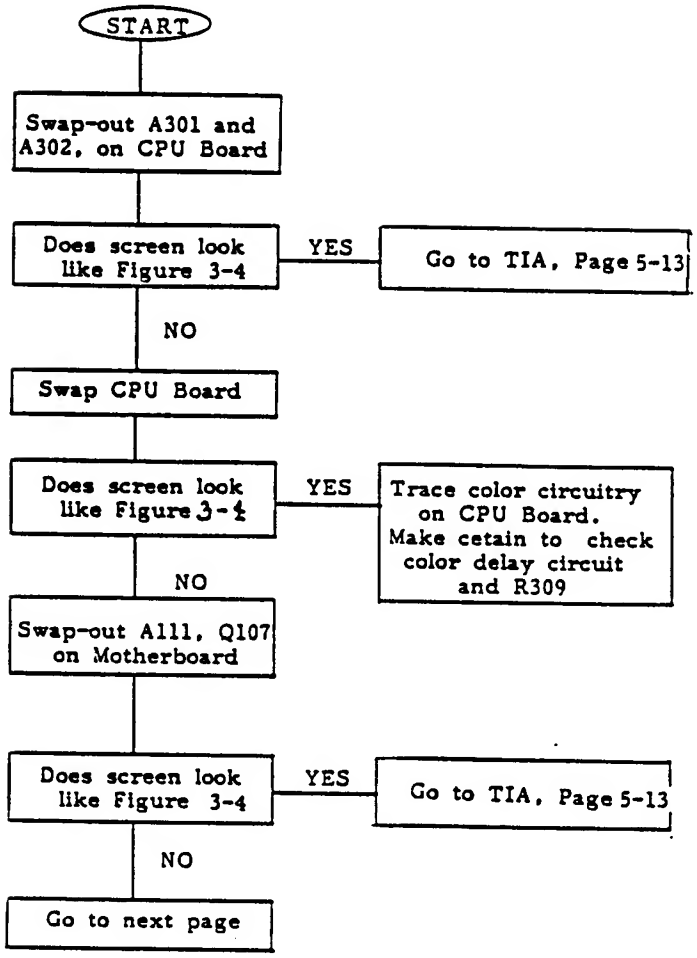

400 COLOR BAR
TROUBLESHOOTING (cont)

Verify that each of the following levels and/or signal wave forms exist before proceeding to the next step. Use SALT II, COLOR BARS, locked into the continuous mode.

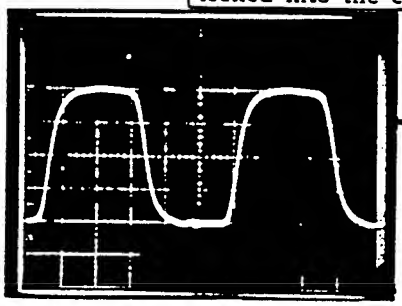

Is there 3.58MHz oscillation at R158 on Motherboard. Refer Figure

NO → Swap-out X101, Q103 and Q104

YES

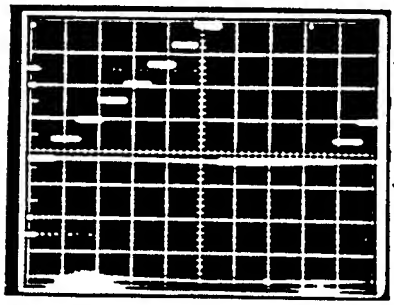

Is there input signal to base of Q107 Refer Figure

NO → Trace circuit back to previous step

YES

Is there output signal from collector on Q107 Refer Figure

NO → Trace circuit back to previous step

YES

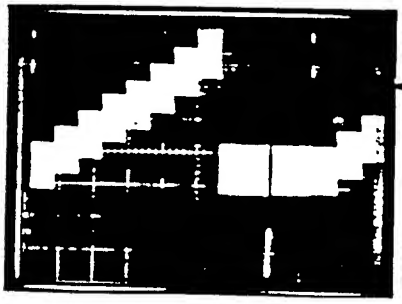

Is there signal at J107, Pin 1 Refer Figure

NO → Trace circuit back to previous step

YES

Go to next page

400 COLOR BAR TROUBLESHOOTING (cont)

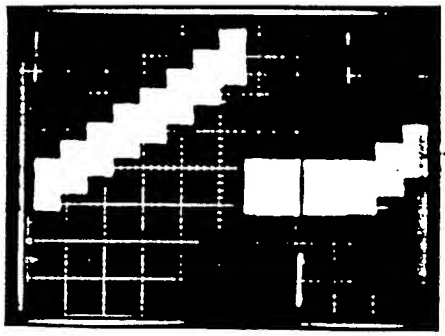

FF

Are the following present Refer Figure

- +5v on Modulator Pin 5
- Signal on Modulator Pin 4
- Signal on Modulator Pin 2

NO → Trace circuit back to previous step

YES

Does screen look like Figure 3-6

YES → Go to TIA, Page 5-18

NO

Call ATARI Tech Line Specialist

Inside California
(800) 672-1466

Outside California
(800) 538-1535
(800) 835-1536

TIA TEST

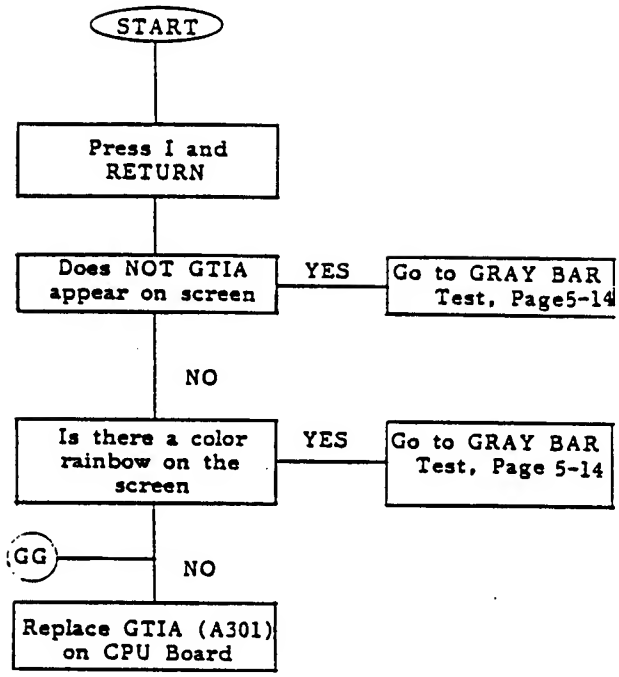
START
Press I and RETURN
Does NOT GTIA appear on screen
YES
Go to GRAY BAR Test, Page5-14
NO
Is there a color rainbow on the screen
YES
Go to GRAY BAR Test, Page 5-14
GG
NO
Replace GTIA (A301) on CPU Board

400 GREY BAR

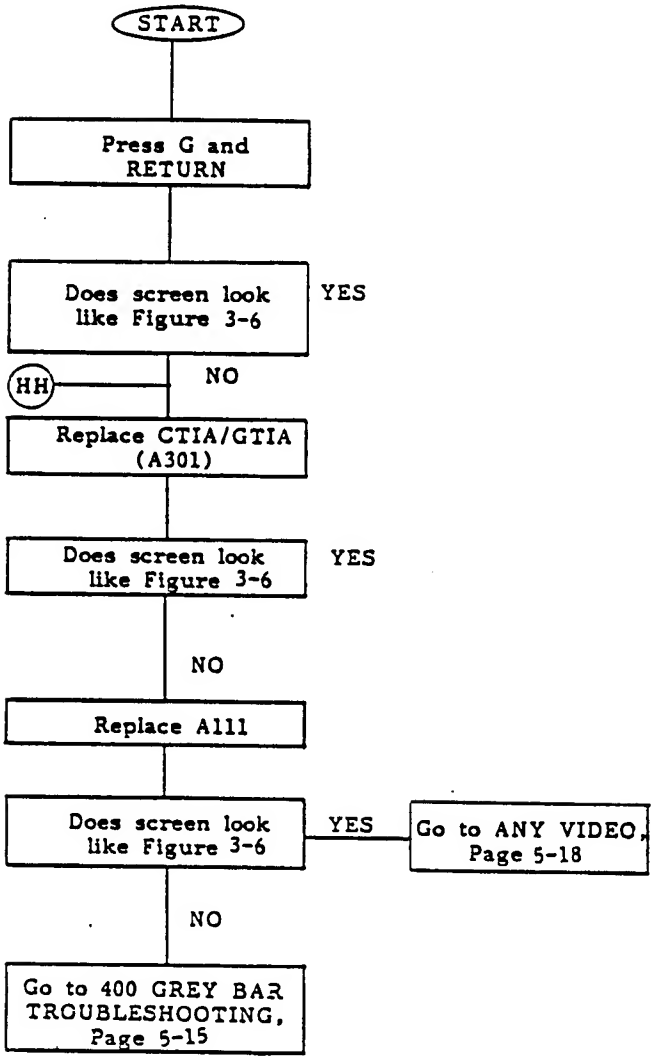
START
Press G and RETURN
Does screen look like Figure 3-6
YES
HH
NO
Replace CTIA/GTIA (A301)
Does screen look like Figure 3-6
YES
NO
Replace A111
Does screen look like Figure 3-6
YES
Go to ANY VIDEO, Page 5-18
NO
Go to 400 GREY BAR TROUBLESHOOTING, Page 5-15

400 GREY BAR TROUBLESHOOTING

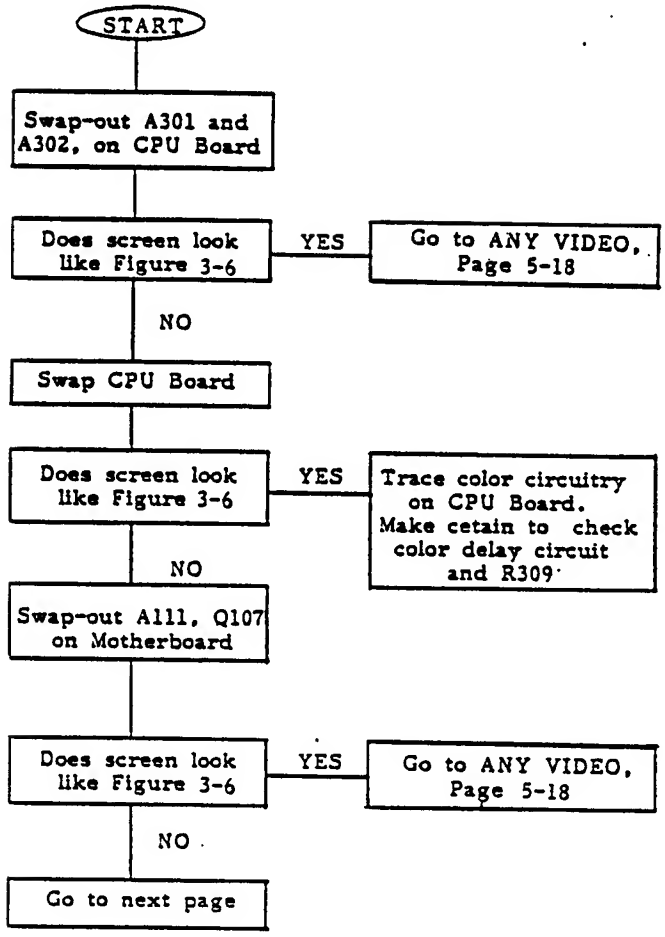

400 GREY BAR
TROUBLESHOOTING (cont)

Verify that each of the following levels and/or signal wave forms exist before proceeding to the next step. Use SALT II, COLOR BARS, locked into the continuous mode.

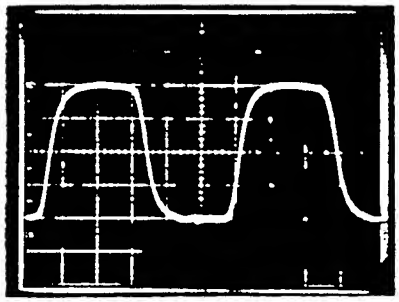

Is there 3.58MHz oscillation at R158 on Motherboard. Refer Figure

NO → Swap-out X101, Q103 and Q104

YES

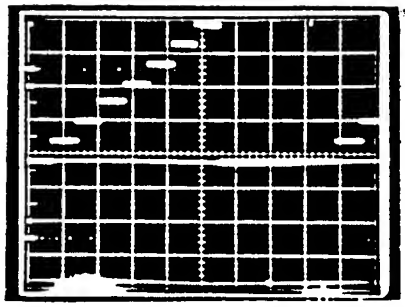

Is there input signal to base of Q107 Refer Figure

NO → Trace circuit back to previous step

YES

Is there output signal from collector on Q107 Refer Figure

NO → Trace circuit back to previous step

YES

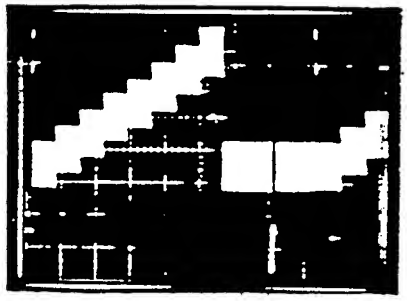

Is there signal at J107, Pin 1 Refer Figure

NO → Trace circuit back to previous step

YES

Go to next page

400 GREY BAR
TROUBLESHOOTING (cont)

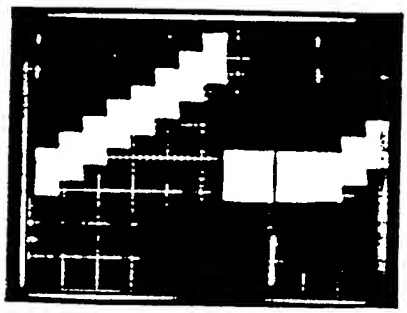

Are the following present. Refer

- +5v on Modulator Pin 5
- Signal on Modulator Pin 4
- Signal on Modulator Pin 2

NO → Trace circuit back to previous step

YES

Does screen look like Figure 3-6

YES → Go to ANY VIDEO, Page 5-18

NO

Call ATARI Tech Line Specialist

Inside California
(800) 672-1466

Outside California
(800) 538-1535
(800) 538-1536

400 ANY VIDEO

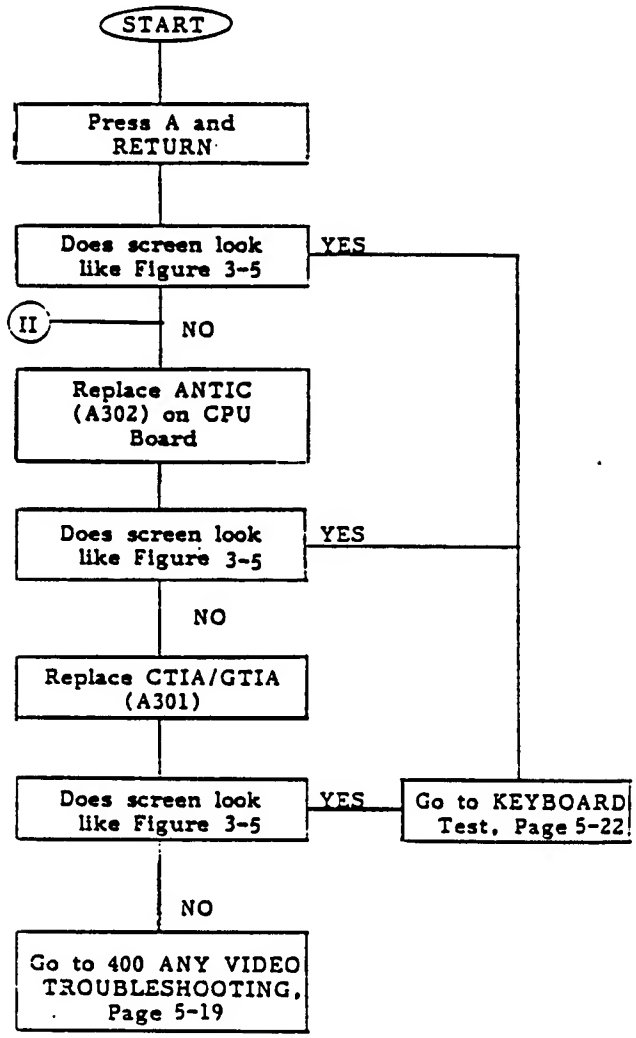

400 ANY VIDEO TROUBLESHOOTING

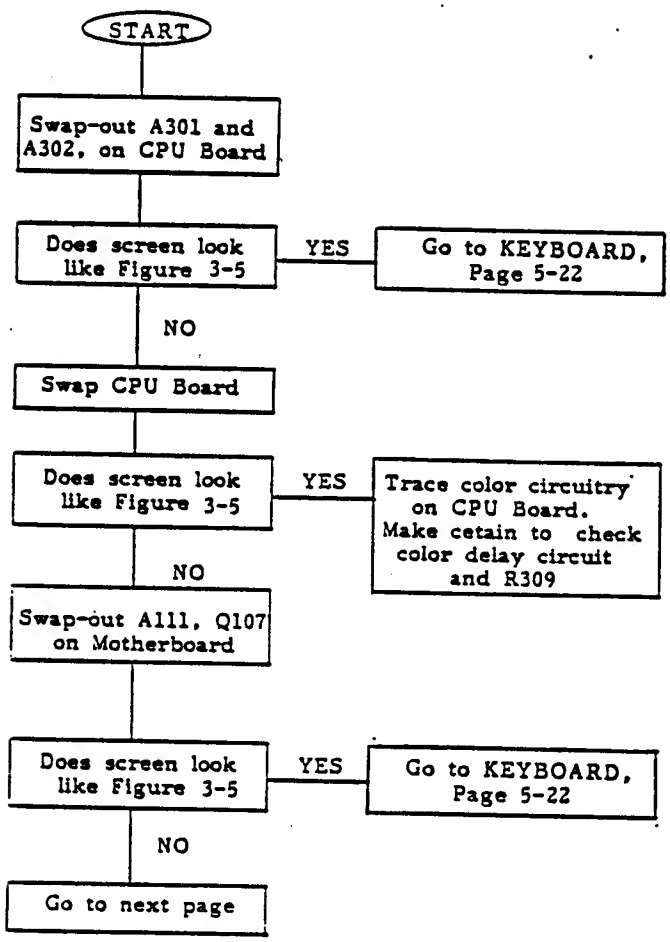

400 ANY VIDEO
TROUBLESHOOTING (cont)

Verify that each of the following levels and/or signal wave forms exist before proceeding to the next step. Use SALT II, COLOR BARS, locked into the continuous mode.

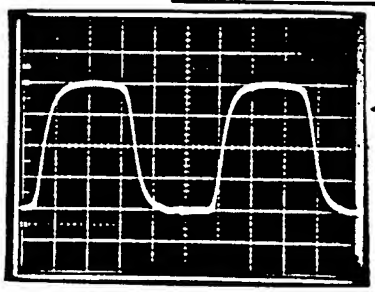

Is there 3.58MHz oscillation at R158 on Motherboard. Refer Figure

NO → Swap-out X101, Q103 and Q104

YES

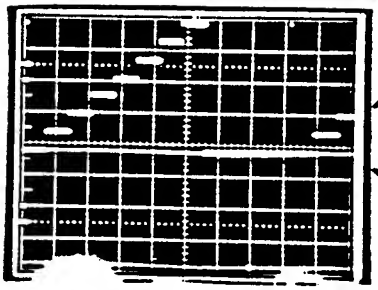

Is there input signal to base of Q107 Refer Figure

NO → Trace circuit back to previous step

YES

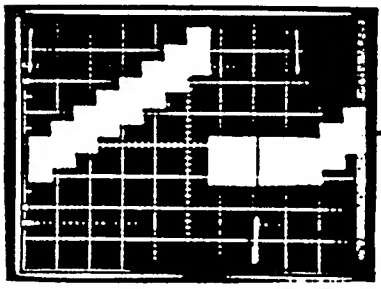

Is there output signal from collector on Q107 Refer Figure

NO → Trace circuit back to previous step

YES

Is there signal at J107, Pin 1 Refer Figure

NO → Trace circuit back to previous step

YES

Go to next page

400 ANY VIDEO
TROUBLESHOOTING (cont)

JJ

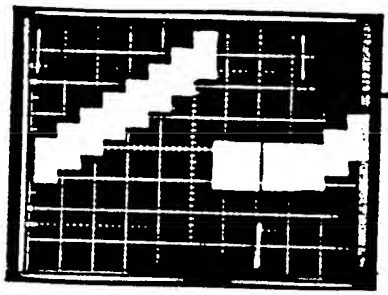

Are the following present Refer Figure

+5v on Modulator Pin 5

Signal on Modulator Pin 4

Signal on Modulator Pin 2

NO → Trace circuit back to previous step

YES

Does screen look like Figure 3-5

YES → Go to KEYBOARD,. Page 5-22

NO

Call ATARI Tech Line Specialist

Inside California
(800) 672-1466

Outside California
(800) 538-1535
(800) 538-1536

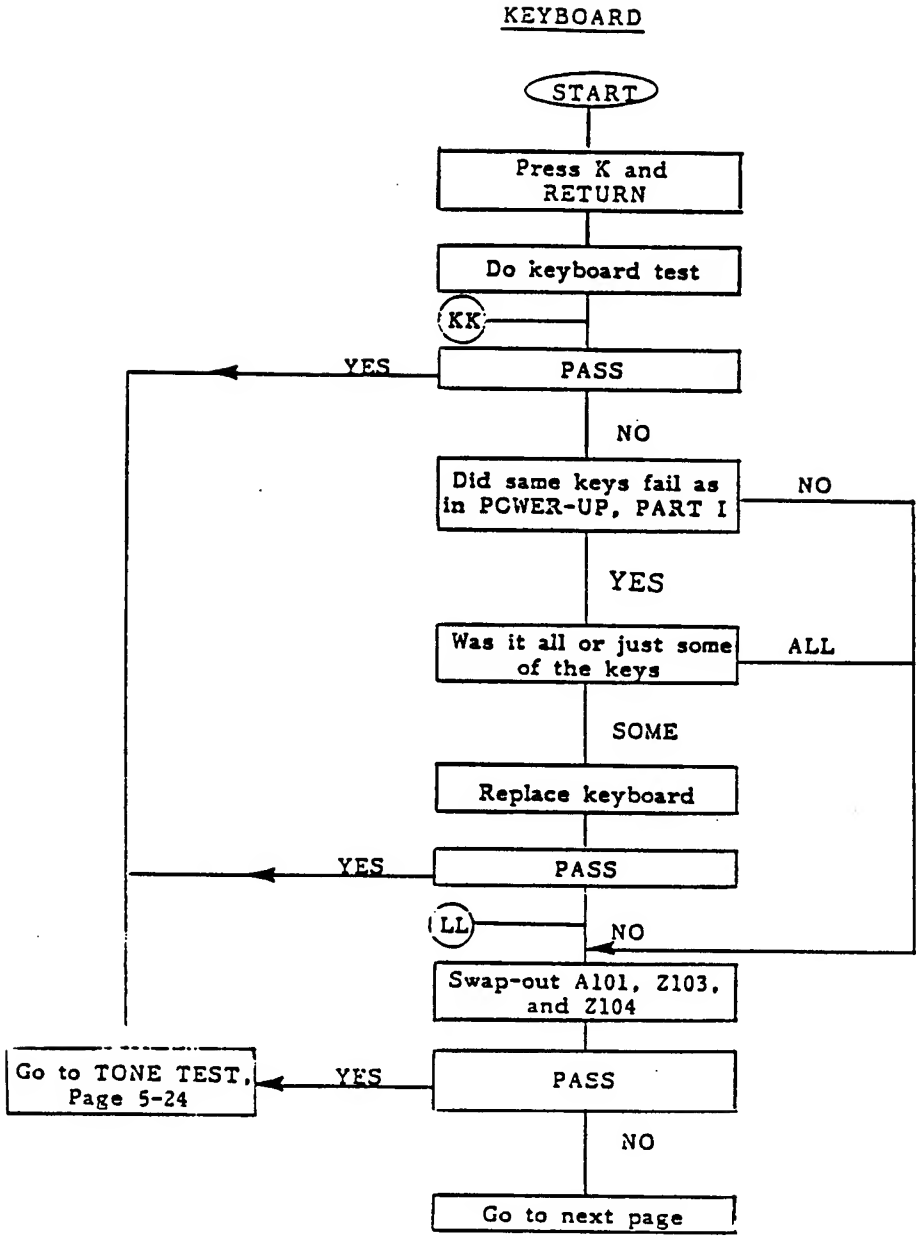
KEYBOARD
START
Press K and RETURN
Do keyboard test
KK
YES
PASS
NO
Did same keys fail as in POWER-UP, PART I
NO
YES
Was it all or just some of the keys
ALL
SOME
Replace keyboard
YES
PASS
LL
NO
Swap-out A101, Z103, and Z104
Go to TONE TEST, Page 5-24
YES
PASS
NO
Go to next page

KEYBOARD (cont)

Troubleshoot, using following information and Keyboard schematic, Page 5-3

TYPICAL KEYBOARD OUTPUT

Sample made from Z104, Pin 14 with W key depressed.

SCOPE:
.1v/DIV,.5mS/DIV
SYNC:
CH1, + Trigger

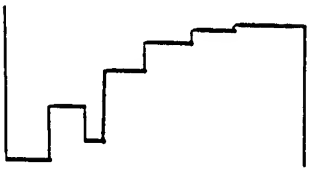

TYPICAL DECODER OUTPUT

Sample made from Z104, Pin 3 with W key depressed

SCOPE:
.1v/DIV, .2mS/DIV
SYNC:
CH1, + Trigger



Pass — YES → Go to TONE TEST, Page 5-24

NO

Call ATARI Tech Line Specialist

Inside California
(800) 672-1466

Outside California
(800) 538-1535
(800) 538-1536

400 TONE TEST

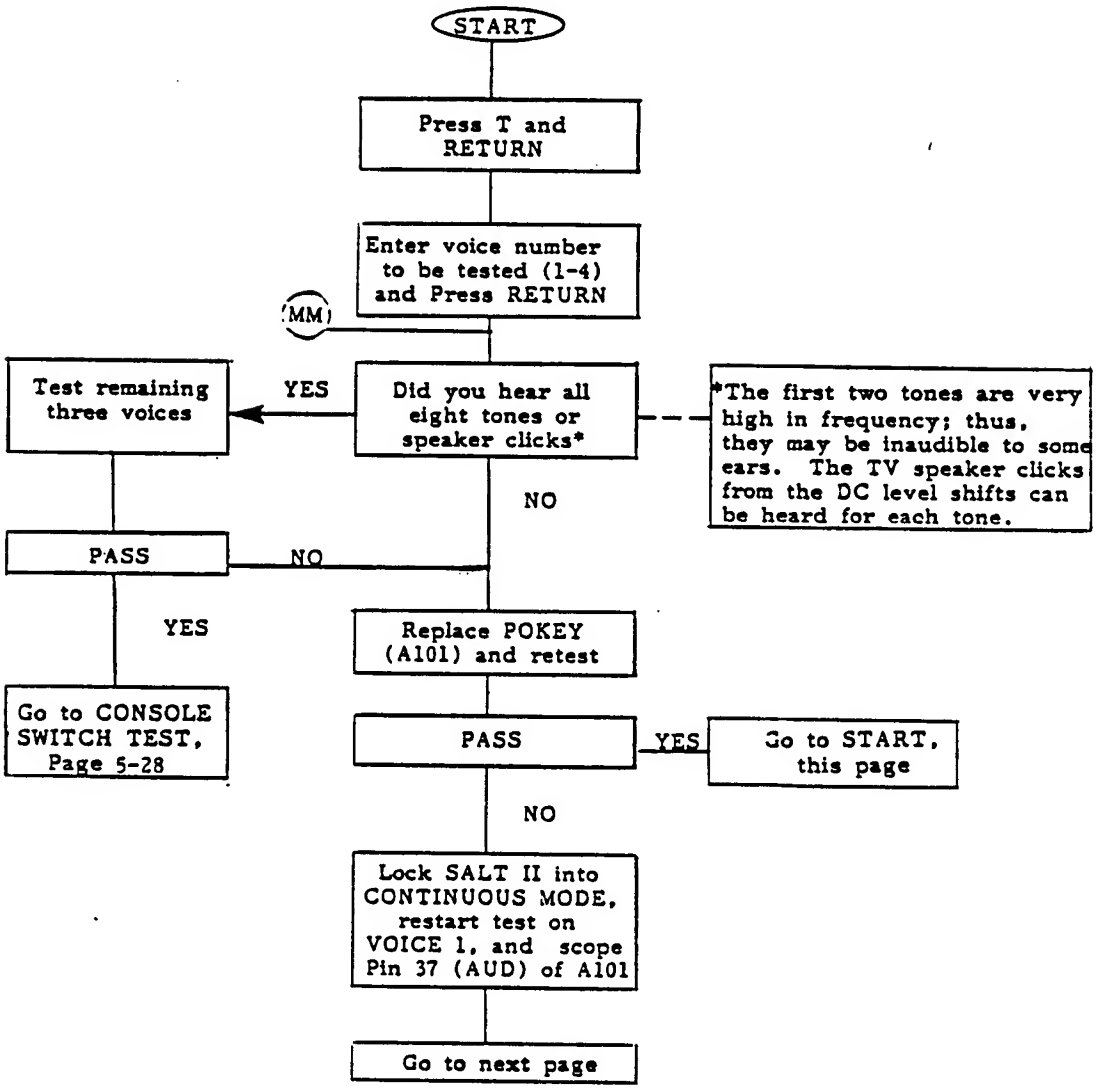

400 TONE TEST (cont)

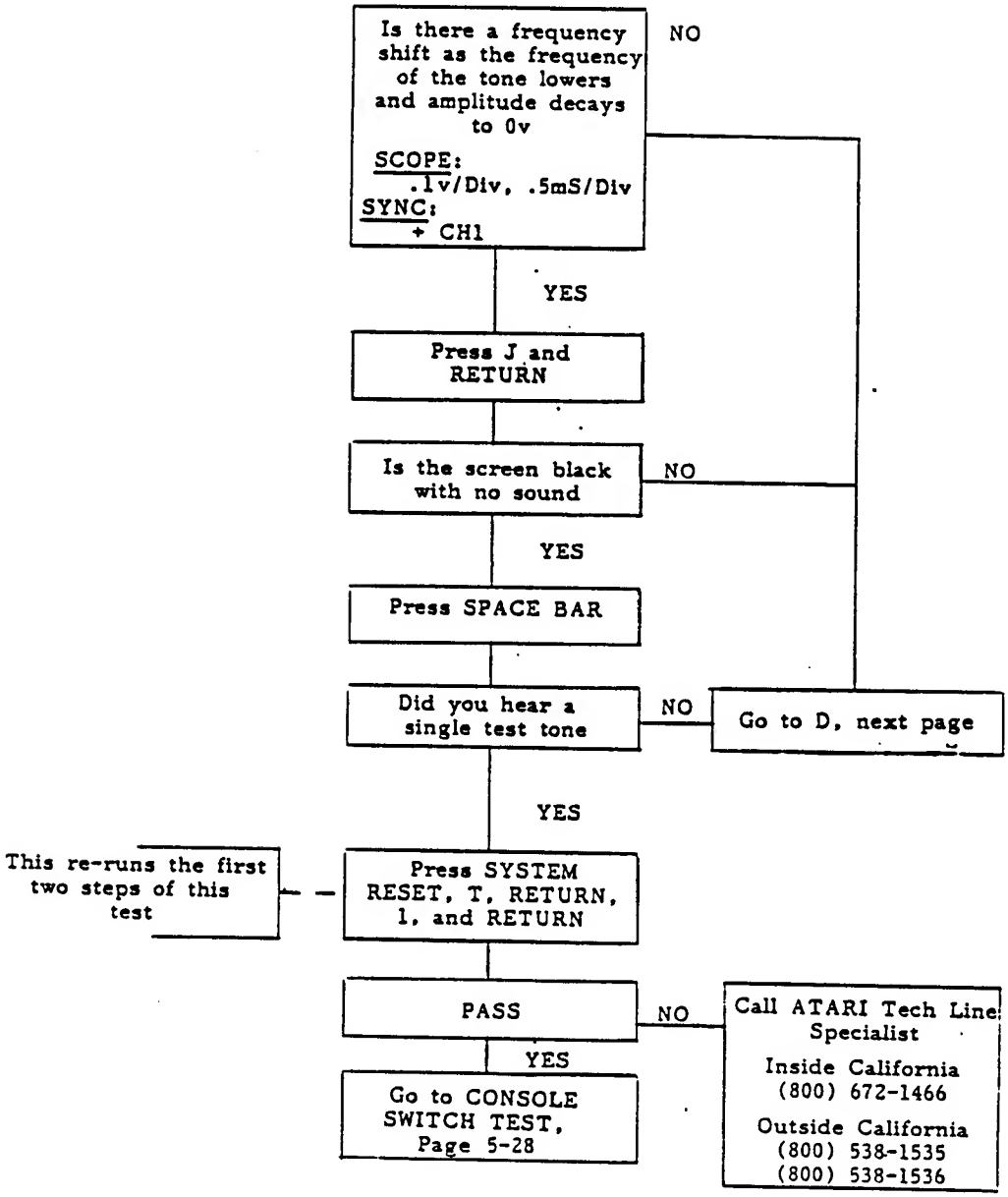

400 TONE TEST (cont)

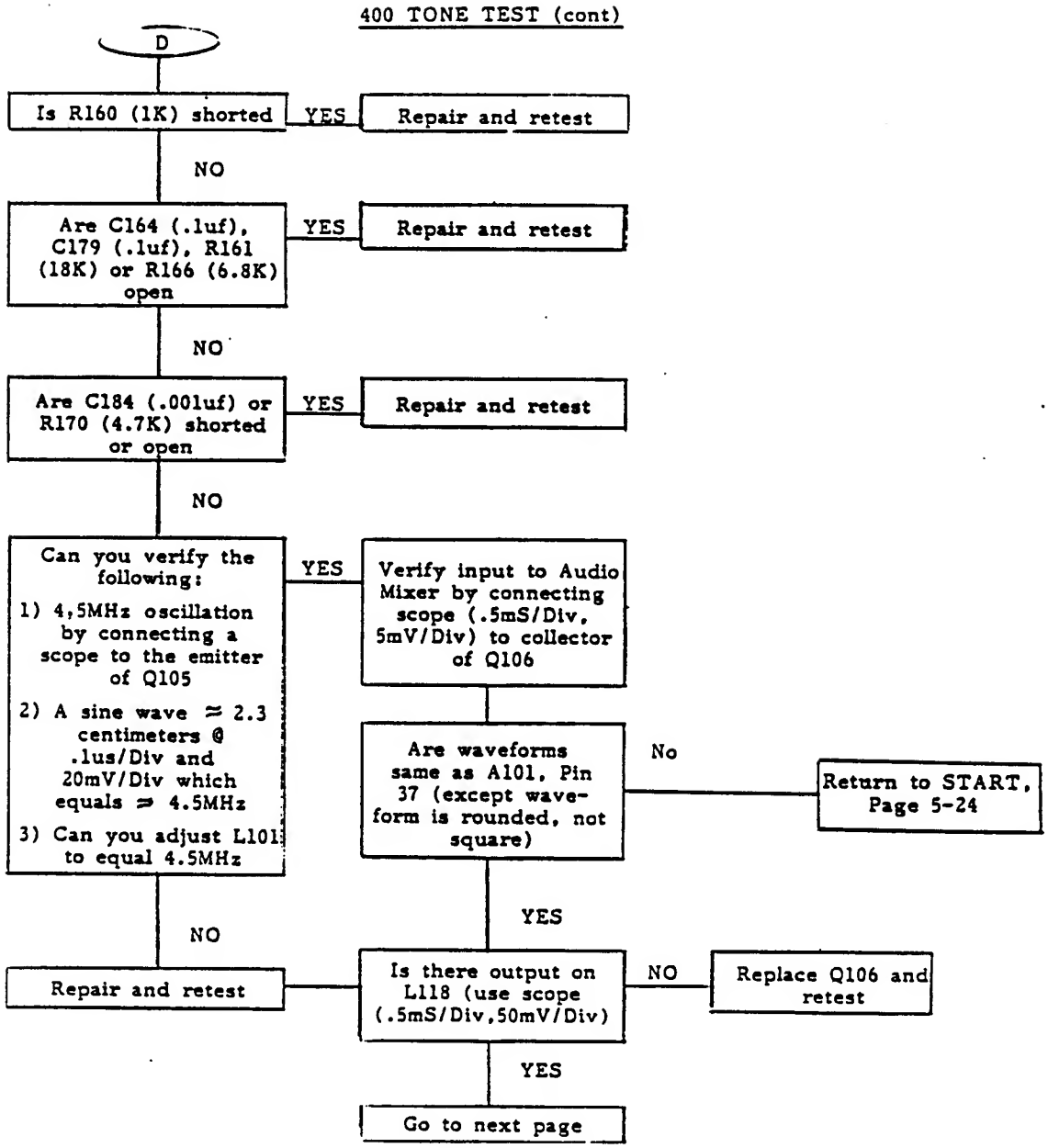

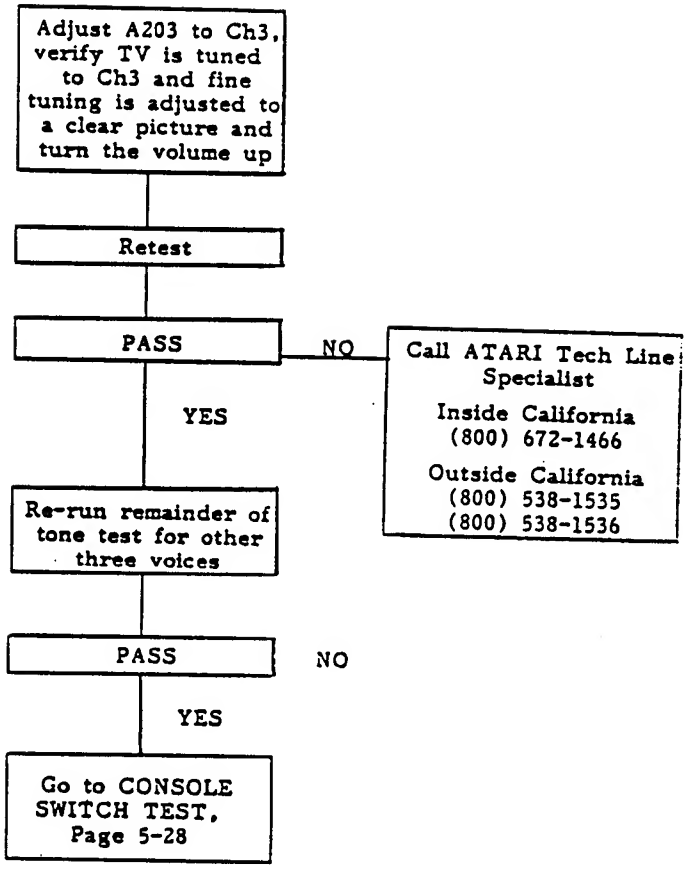
Adjust A203 to Ch3, verify TV is tuned to Ch3 and fine tuning is adjusted to a clear picture and turn the volume up
Retest
PASS
NO
Call ATARI Tech Line Specialist
Inside California
(800) 672-1466
Outside California
(800) 538-1535
(800) 538-1536
YES
Re-run remainder of tone test for other three voices
PASS
NO
YES
Go to CONSOLE SWITCH TEST, Page 5-28

400 CONSOLE SWITCH TEST

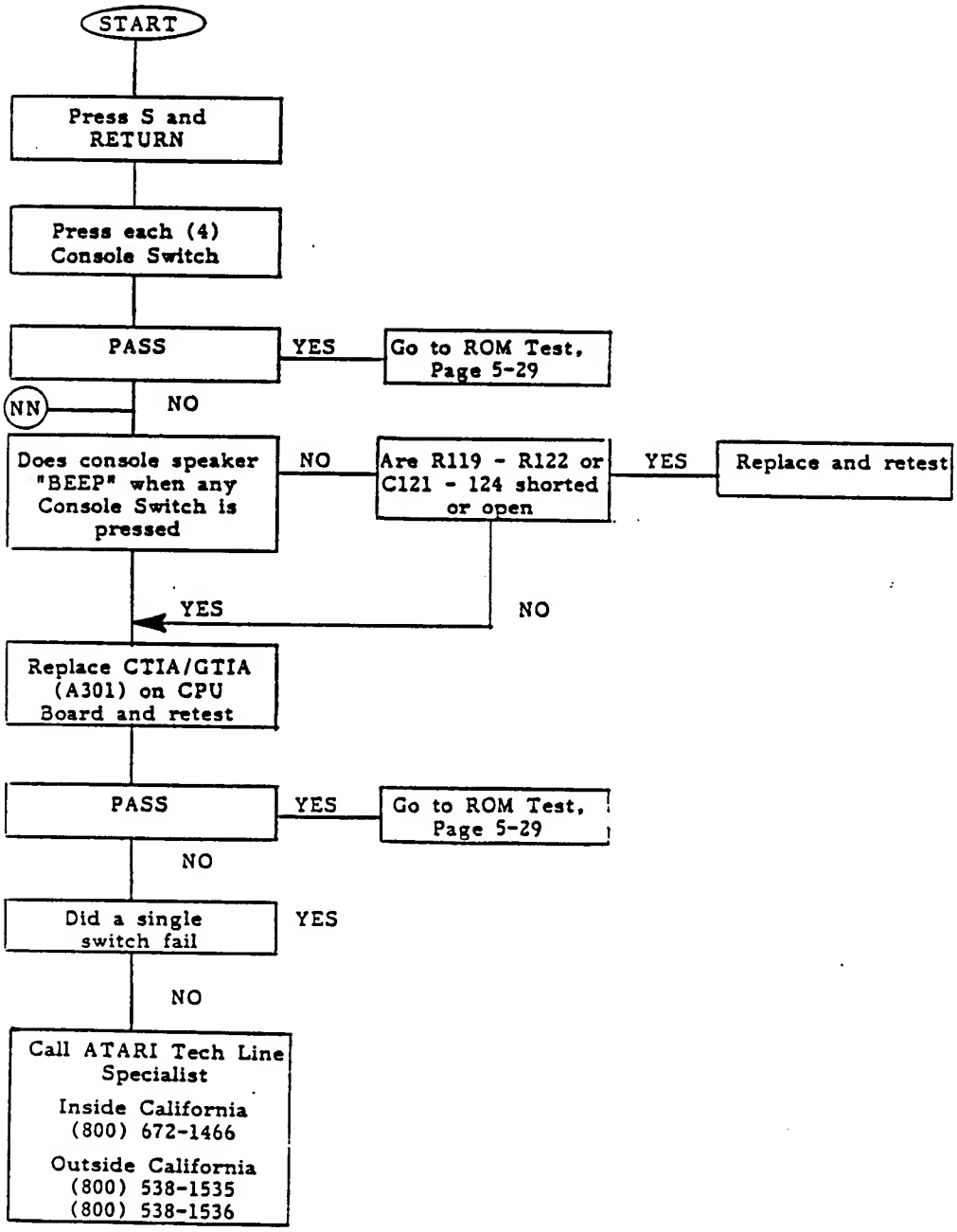

400 VERIFY ROM

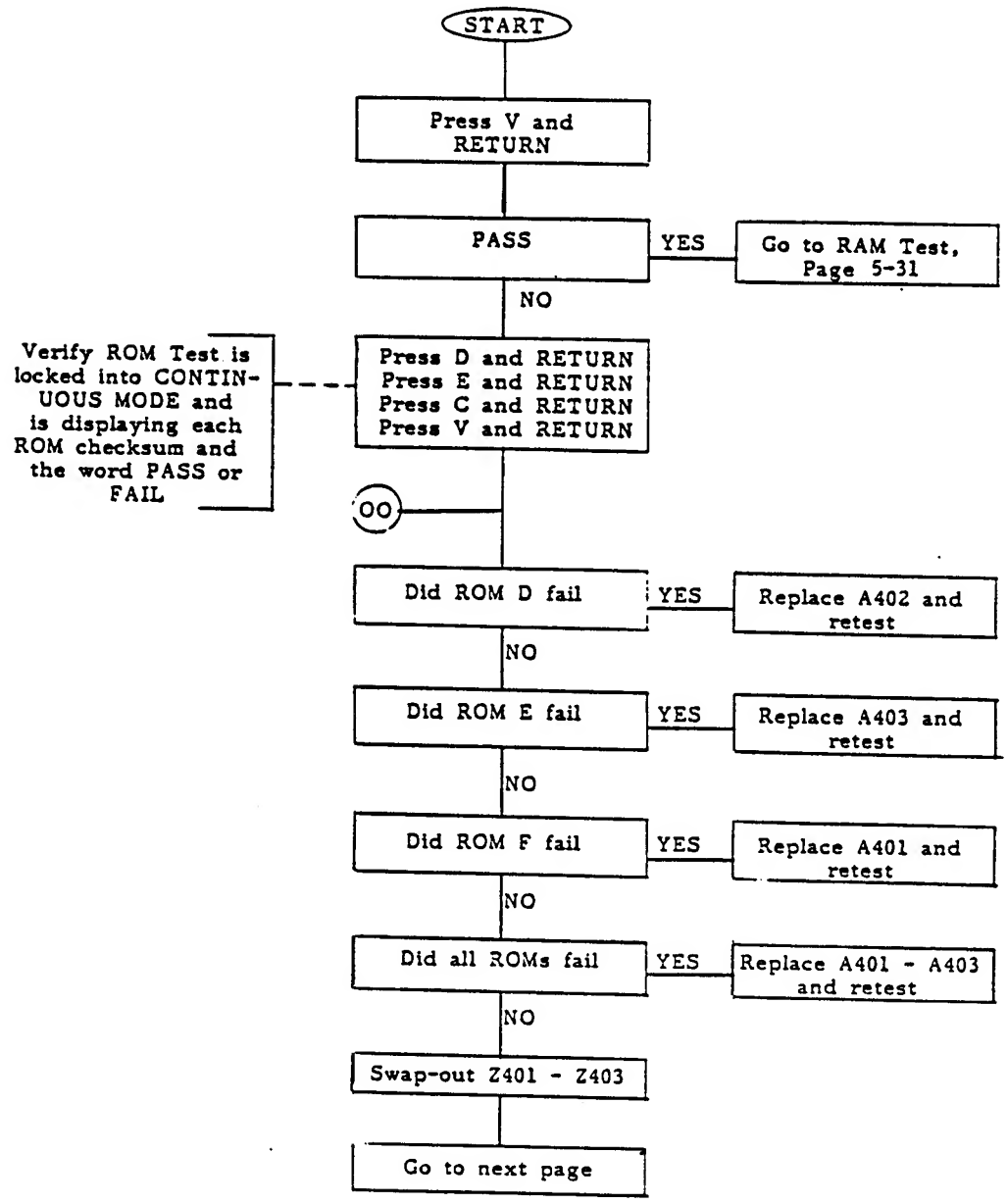

400 VERIFY ROM (cont)

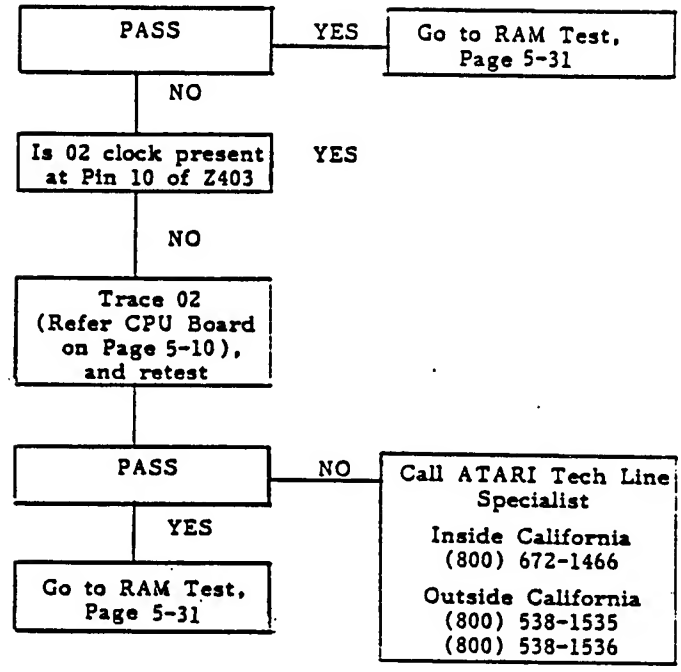

400 RAM

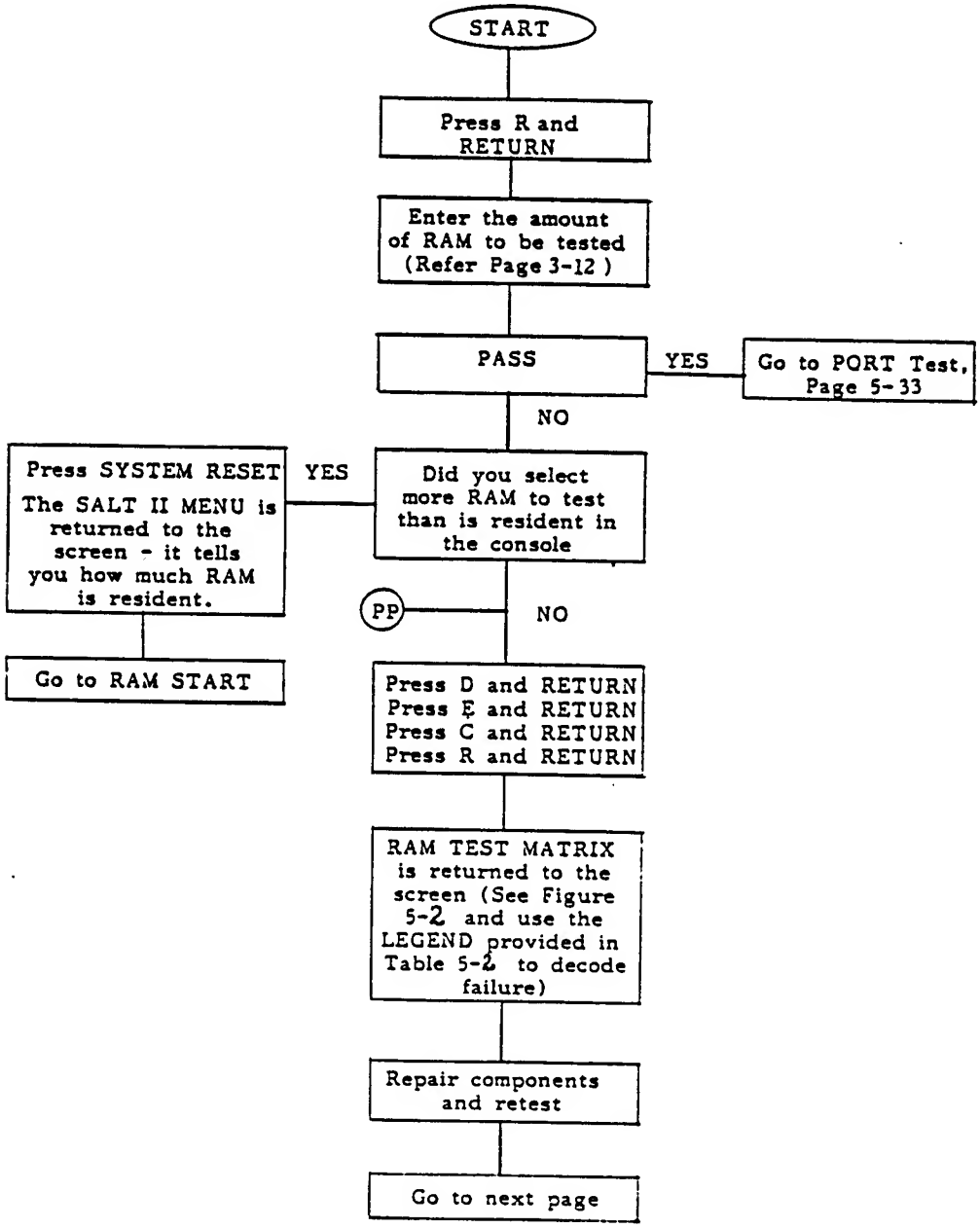
START
Press R and RETURN
Enter the amount of RAM to be tested (Refer Page 3-12)
PASS
YES
Go to PORT Test, Page 5-33
NO
Press SYSTEM RESET
The SALT II MENU is returned to the screen - it tells you how much RAM is resident.
YES
Did you select more RAM to test than is resident in the console
PP
NO
Go to RAM START
Press D and RETURN
Press E and RETURN
Press C and RETURN
Press R and RETURN
RAM TEST MATRIX is returned to the screen (See Figure 5-2 and use the LEGEND provided in Table 5-2 to decode failure)
Repair components and retest
Go to next page

400 RAM (cont)

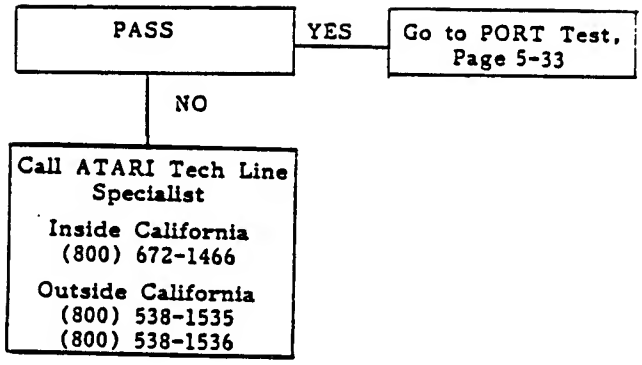
PASS
YES
Go to PORT Test, Page 5-33
NO
Call ATARI Tech Line Specialist
Inside California
(800) 672-1466
Outside California
(800) 538-1535
(800) 538-1536

400 PORT

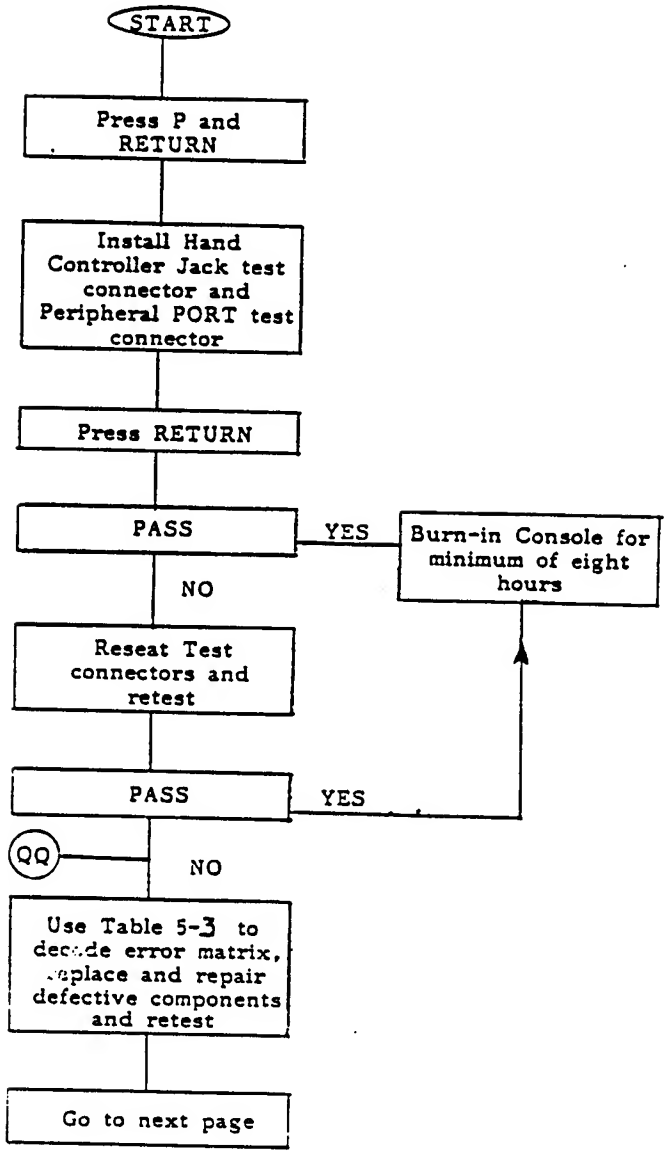
START
Press P and RETURN
Install Hand Controller Jack test connector and Peripheral PORT test connector
Press RETURN
PASS
YES
Burn-in Console for minimum of eight hours
NO
Reseat Test connectors and retest
PASS
YES
QQ
NO
Use Table 5-3 to decode error matrix, replace and repair defective components and retest
Go to next page

400 PORT (cont)

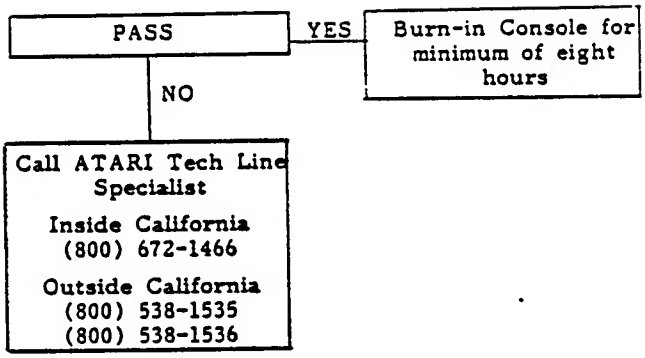

THIS PAGE INTENTIONALLY LEFT BLANK

Table 5-1
CLOCK CIRCUIT

PIN NUMBER	BOARD	FREQUENCY	SCOPE CHART # *
21 of J101	CPU	1.789	1
22 of J101	CPU	1.789	2
8 of Z302	CPU	1.789	2
9 of Z302	CPU	1.789	1
10 of Z302	CPU	1.789	2
13 of Z302	CPU	1.789	3
37 of A303	CPU	1.140	4
6 of Z301	CPU	1.789	3
34 of A302	CPU	1.789	3
35 of A302	CPU	3.579	5
29 of A301	CPU	3.579	5
28 of A301	CPU	3.579	6
Collector of Q102	800 Main Board	3.579	6
Collector of Q104	400 Main Board	3.579	6
7 of A101	400/800 Main Board	1.789	1
25 of A102	400/800 Main Board	1.789	1

* Use Scope Waveform Legend on next page to see illustration of waveform.

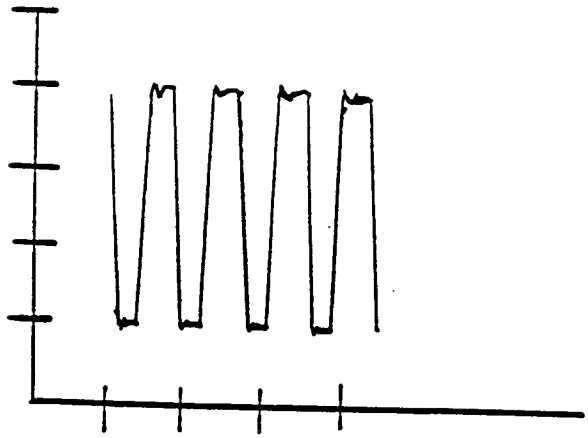

Scope Waveform 1 IuS/DIV IV/DIV

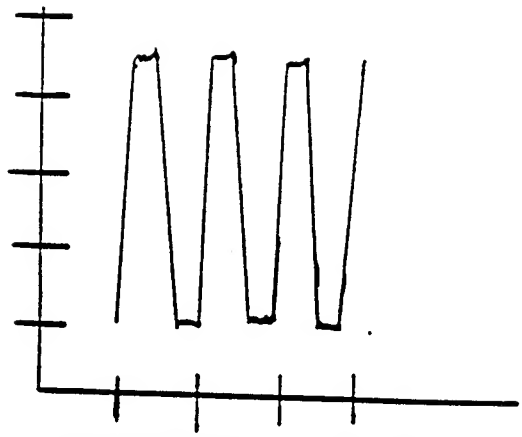

Scope Waveform 2 IuS/DIV IV/DIV

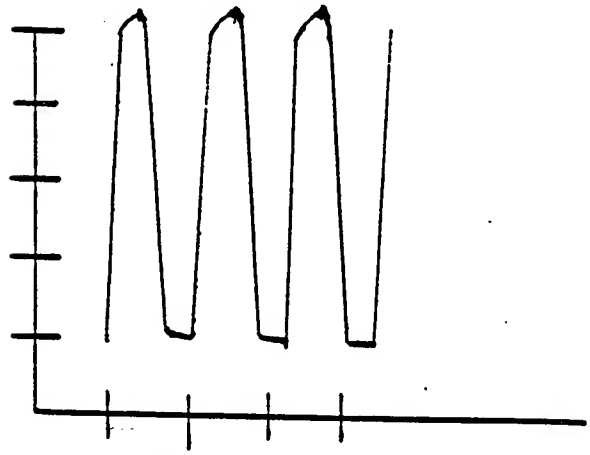

Scope Waveform 3 IuS/DIV IV/DIV

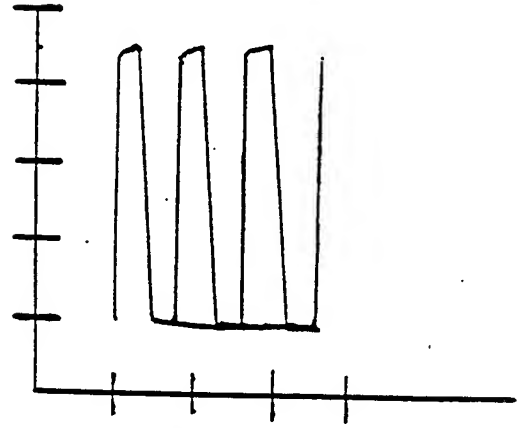

Scope Waveform 4 IuS/DIV IV/DIV

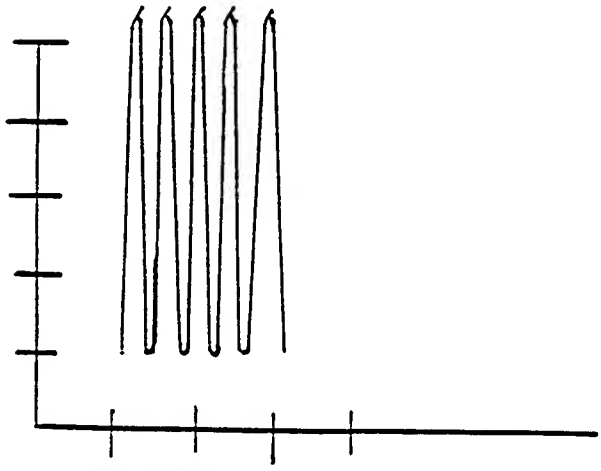

Scope Waveform 5 IuS/DIV IV/DIV

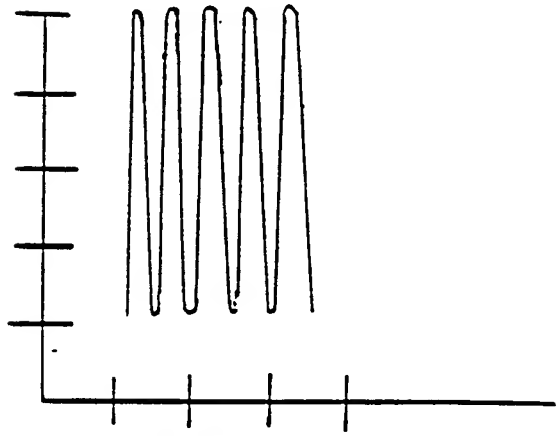

Scope Waveform 6 Ius/DIV IV/DIV

Scope Waveform Legend

Keyboard Connection Chart

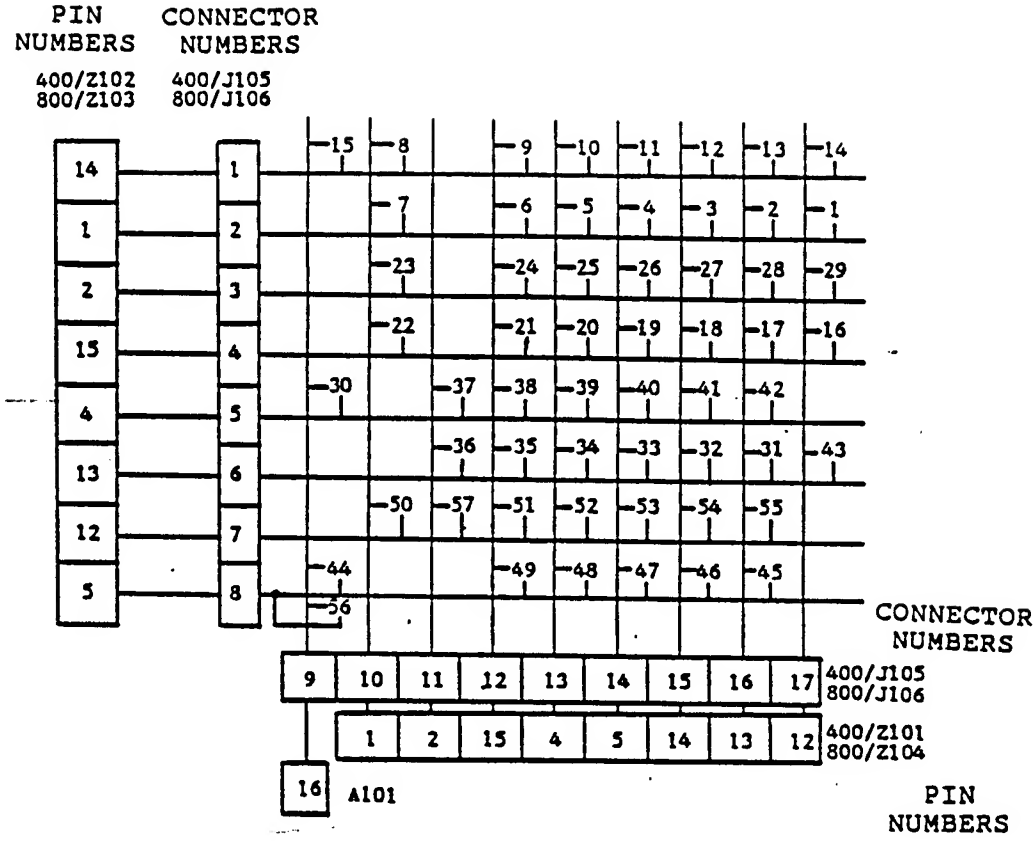

Legend

1. ESC	15. BREAK	29. RETURN	43. CAPS LOWR
2. ! 1	16. CLR SET TAB	30. CRTL	44. SHIFT
3. " 2	17. Q	31. A	45. Z
4. # 3	18. W	32. S	46. X
5. $ 4	19. E	33. D	47. C
6. % 5	20. R	34. F	48. V
7. & 6	21. T	35. G	49. B
8. ' 7	22. Y	36. H	50. N
9. @ 8	23. U	37. J	51. M
10. (9	24. I	38. K	52. [,
11.) 0	25. O	39. L	53.] .
12. CLEAR <	26. P	40. ; :	54. ? /
13. INSERT >	27. ↑ _ −	41. ← + \	55. / | \
14. DELETE BACK S	28. ↓ = |	42. → * ^	56. SHIFT
	57. SPACE BAR		

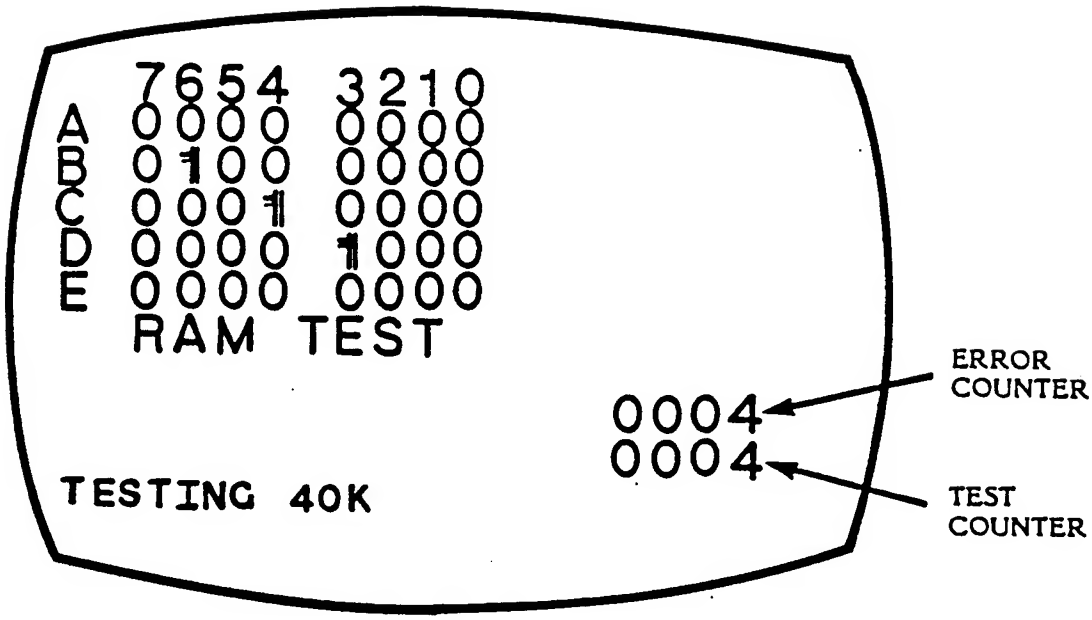

Defective RAM Boards

Defect	
Indicator	Description
B4	1st 8K Block
B5; or B4 and B5	2nd 8K Block
B6; or B4 and B6	3rd 8K Block
B5 and B6; or B4, B5 and B6	4th 8K Block
B7; or B4 and B7	5th 8K Block

Defective RAM Identifier

Difference		
Column	Description	
	8K	16K
D0	Z512	Z512
D1	Z511	Z511
D2	Z510	Z510
D3	Z508	Z509
D4	Z509	Z508
D5	Z507	Z507
D6	Z505	Z506
D7	Z506	Z505

Figure and Table 5-2

Table 5-3

Port Test Legend

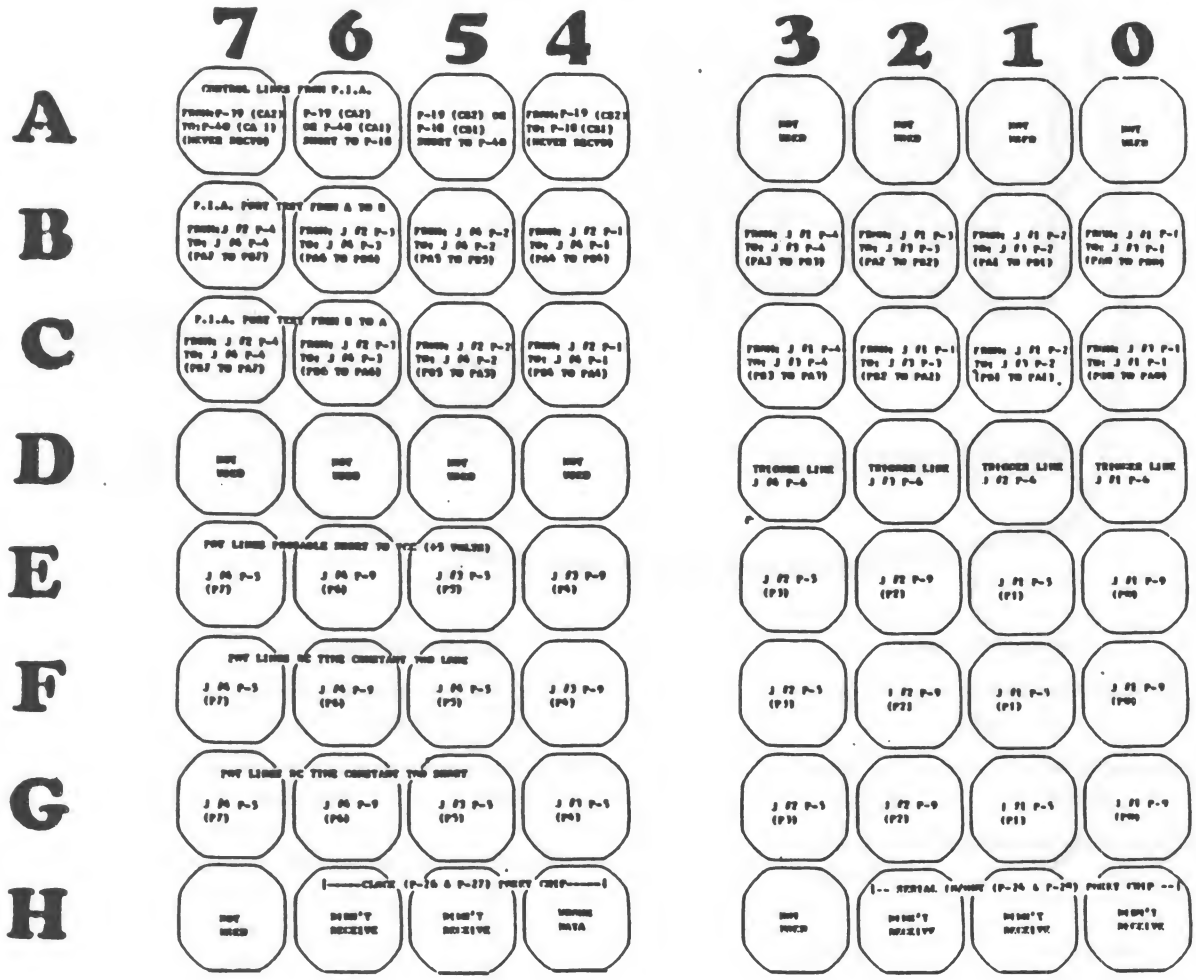

SECTION 6

SYMPTOM CHECKLIST

The Symptom Checklist is designed to assist the experience technician arrive at a rapid diagnosis for problems. The checklist is not intended to replace the Diagnostic Flowchart as the primary troubleshooting guide, but rather, to supplement the flowchart.

Each symptom is accompanied by some possible causes and the best point to enter the Diagnostic Flowchart to locate the problem.

Symptom	Possible Cause	Diagram Entry Point
Snowy Screen	SW Box, AC Adaptor CH. Select SW, Modulator Adjustment, RF Cable Damage	AA 400, Page 5-3 800, Page 7-3
Black/Gray Screen	Verify +5V, -5V & +12V Power Supplies, CR201-209, C201-205, C210, A201, A302, A303, A301, A103, A111, Z103-Z105, Q103-4, X101	BB 400, Page 5-4 800, Page 7-4
Green/Yellow Screen	Z103-5, A03, Z303 & 4 all on ROM Board	CC 400, Page 5-6 800, Page 7-6
Solid Blue Screen	A101, Q107, X101	DD 400, Page 5-7 800, Page 7-7
No Color or Bad Color Bars with SALT II	R309 Adjust, A301-2 on CPU Board; A111, Q107 on Mainboard, X101, Q103, Q104	EE 400, Page 5-9 800, Page 7-9
	Modulator Adjustment	FF 400, Page 5-12 800, Page 7-12
No Color Bars on TIA Test	A301 on CPU Board	GG 400, Page 5-12 800, Page 7-12

Symptom	Possible Cause	Diagram Entry Point
No Gray Bars	A301, A111, Q107 R309 Adjustment X101, Q103 & 4 Modulator	HH 400, Page 5-14 800, Page 7-14
Upside Down Alpha/ Numerics or Player Field	A302 on CPU Board, A301 A111, Q107	II 400, Page 5-1 800, Page 7-14
	Modulator	JJ 400, Page 5-21 800, Page 7-21
Some Keyboard Keys Fail	Keyboard Failure	KK 400, Page 5-22 800, Page 7-22
All Keyboard Keys Fail	A101, Z103 & 4	LL 400, Page 5-22 800, Page 7-22
Tones Missing During Sound or Games	A101, R160, R161, R166, R170 C164, C179, C184, Q105 L101, Q106, L118, A203	MM 400, Page 5-24 800, Page 7-24
Console (Game) Switches Will Not Function	A301 on CPU Board, R119-122 C121-124	NN 400, Page 5-28 800, Page 7-28
ROM Test Failed	A401-403 on ROM Board 1403	OO 400, Page 5-29 800, Page 7-29
RAM Test Failed	See RAM test Matrix, Figure 5 Table 5	PP 400, Page 5-31 800, Page 7-31
Hand Controllers Will Not Work	See Port Test Matrix, Table 5	QQ 400, Page 5-33 800, Page 7-33

SECTION 7

800 DIAGNOSTIC FLOWCHART

The Diagnostic Flowchart is intended to be easy to use and the primary aid when troubleshooting the ATARI 800 Computer Console. Follow the prompts in the order presented. When a question is asked, follow the line from that box which best applies to the unit's situation. The flowchart leaves little to chance, it tells you when to perform a specific test and when to replace components.

Swap Out Procedure

At many places in the diagnostic flowchart, a box tells you to "swap-out" a chip or a number of chips in a particular order. The "swap-out" instruction means that you should replace the indicated components (one at a time) with a known good component of the same type. The 800 should then be tested with the new, known-good component in place to see whether the "swap-out" solved the problem being checked. If the swap-out did not fix the problem, the known-good component should be removed, and the original component reinserted. In this way, you avoid needlessly replacing good components.

CAUTION:

Extreme care should be taken when handling the integrated circuit chips. They are all very sensitive to static electricity and can easily be damaged by careless handling. Always keep the chips in their plastic carrier tubes or on conductive foam when not handling them. Make certain you are well grounded when handling the chips. Atari strongly recommends that you wear a conductive grounding band (which ties from your arm to ground) when handling the chips.

The chips are also susceptible to damage from stress when being removed from or inserted into the sockets. Always use a chip-puller when removing the chips. Do not pry the chip out with a screwdriver or any other tool.

Failure to follow the above guidelines results in unusally high chip failure rates and extra expense.

800 POWER-UP

CATASTROPHIC FAILURES AND BASIC OPERATIONS

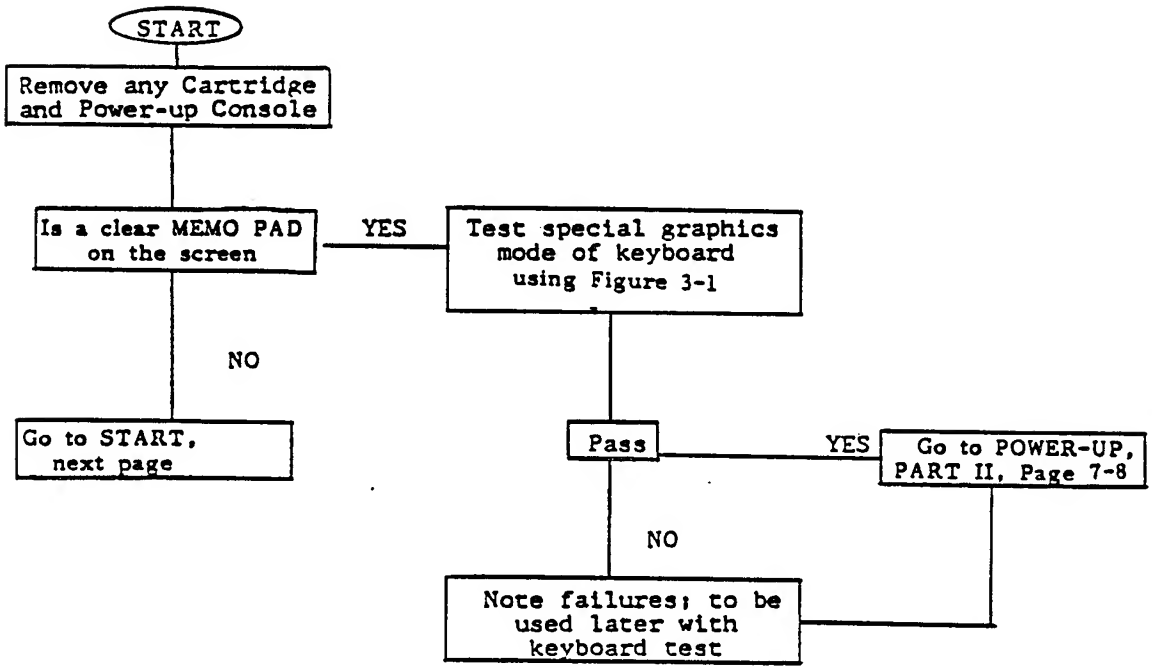

800 POWER-UP

CATASTROPHIC FAILURES AND BASIC OPERATIONS

SNOWY SCREEN

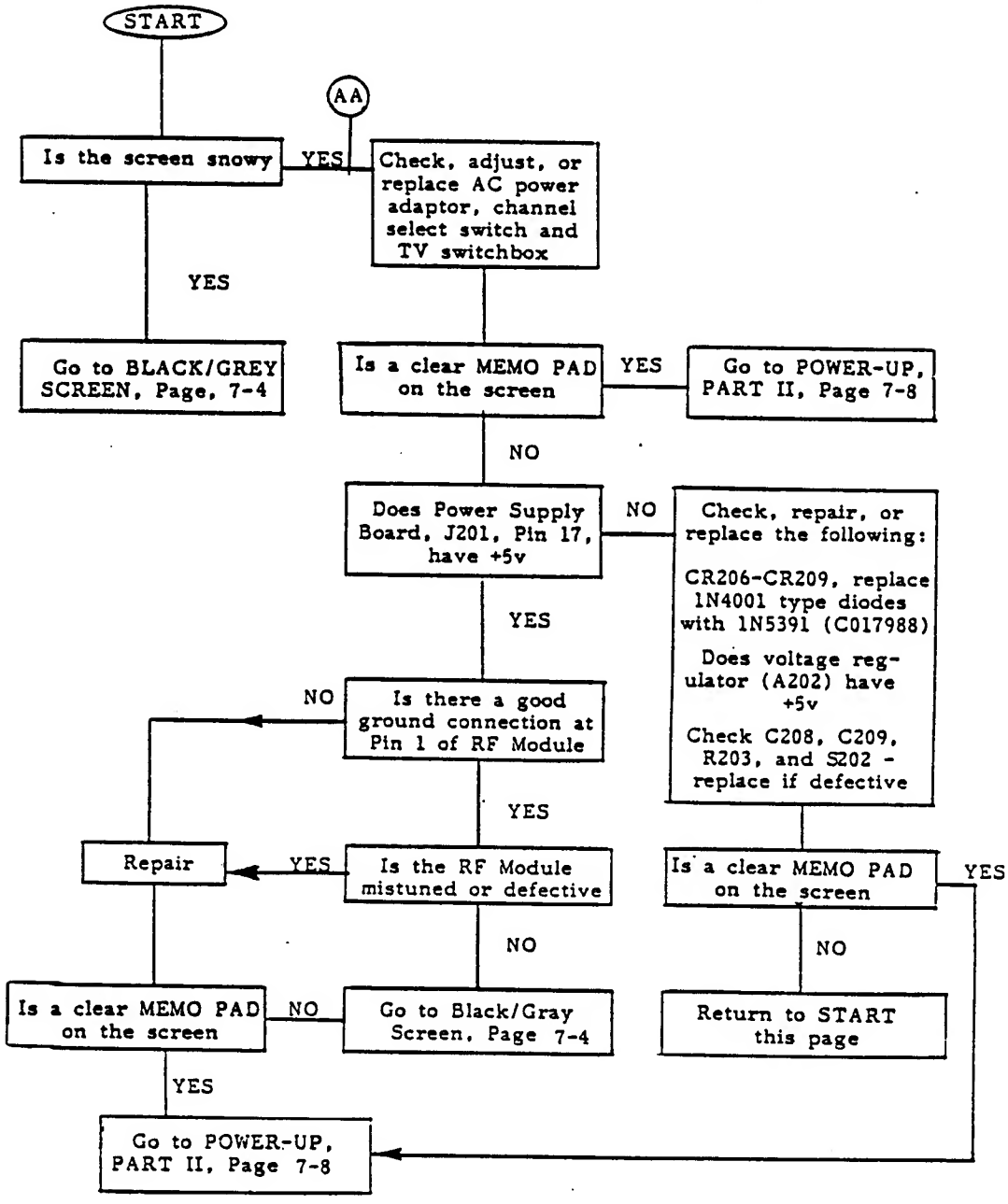

800 POWER-UP

CATASTROPHIC FAILURES AND BASIC OPERATIONS

BLACK/GREY SCREEN

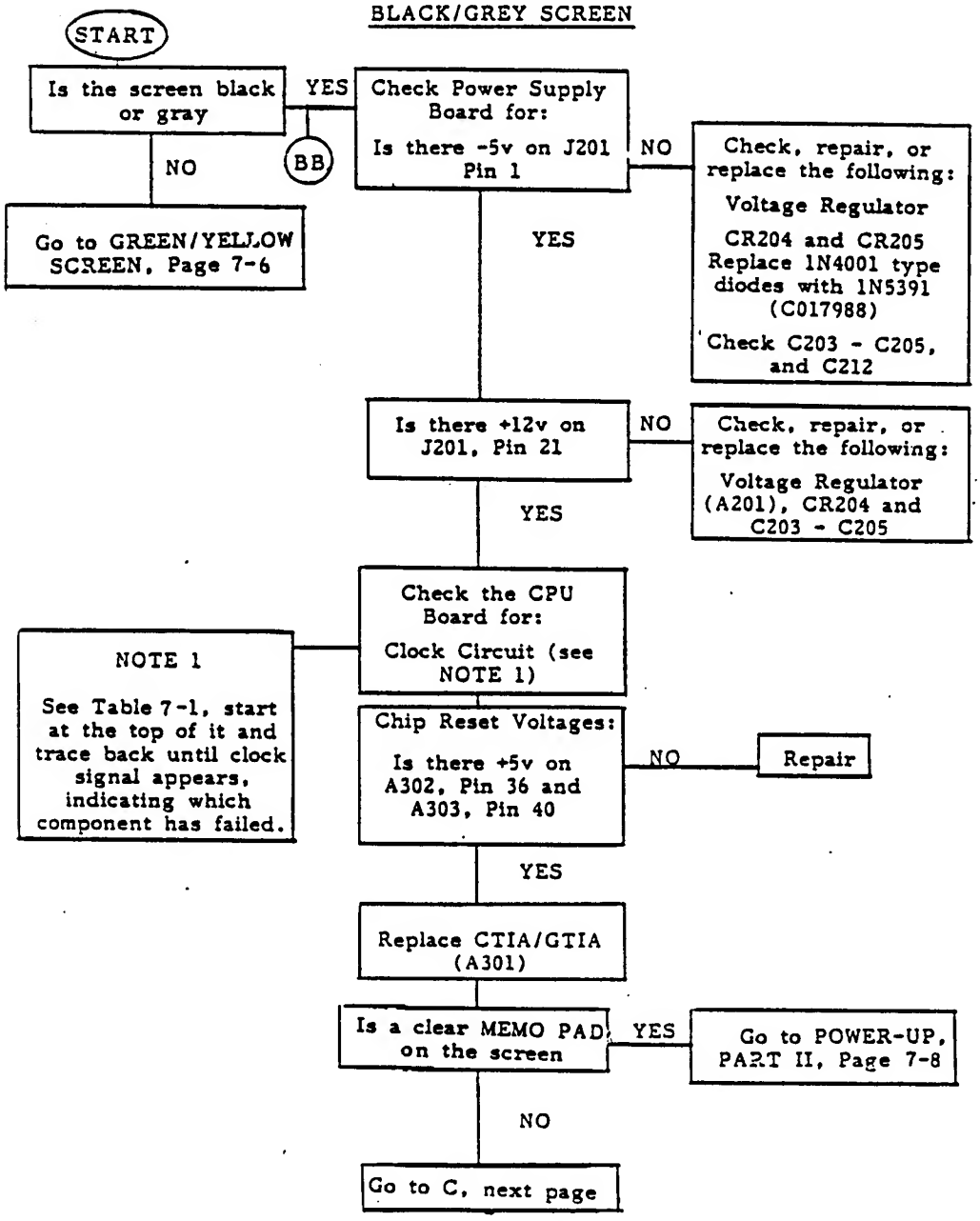

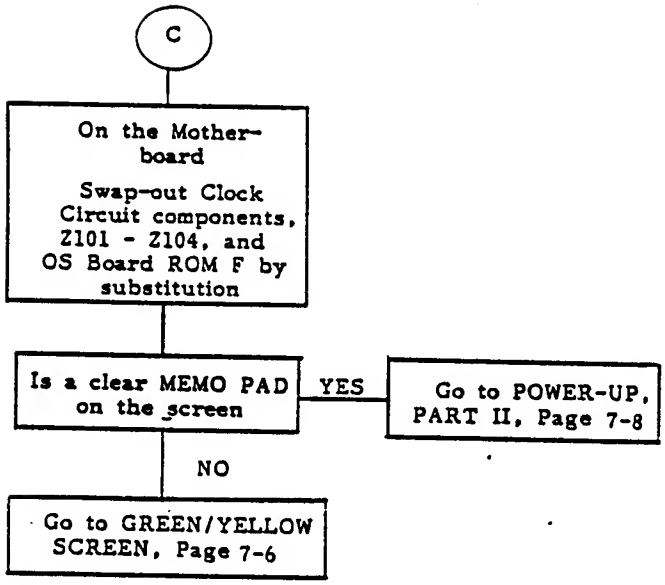
C
On the Mother-board
Swap-out Clock Circuit components, Z101 - Z104, and OS Board ROM F by substitution
Is a clear MEMO PAD on the screen
YES
Go to POWER-UP, PART II, Page 7-8
NO
Go to GREEN/YELLOW SCREEN, Page 7-6

800 POWER-UP

CATASTROPHIC FAILURES AND BASIC OPERATIONS

GREEN/YELLOW SCREEN

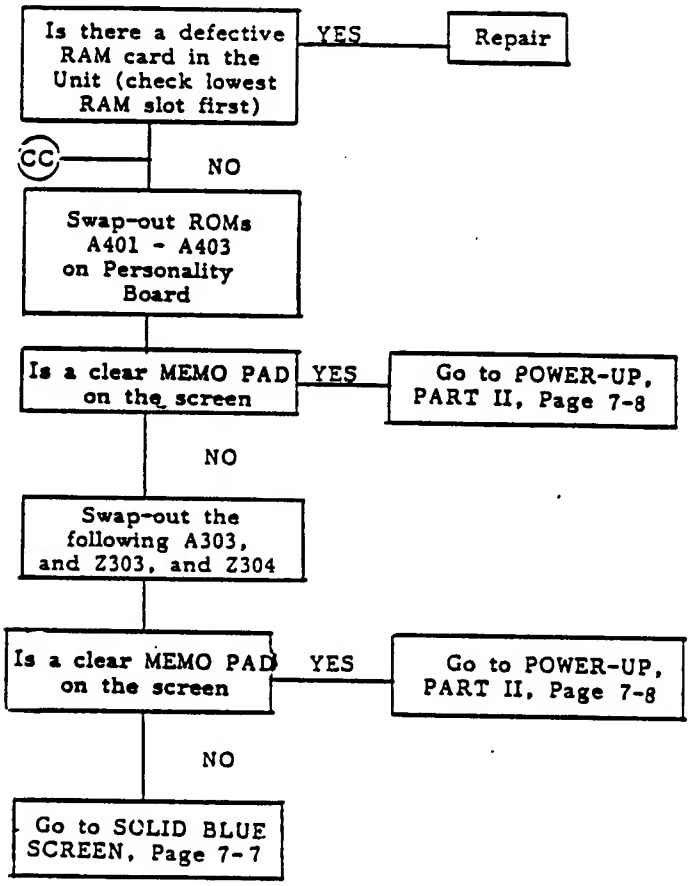

800 POWER-UP
CATASTROPHIC FAILURES AND BASIC OPERATIONS
SOLID BLUE SCREEN

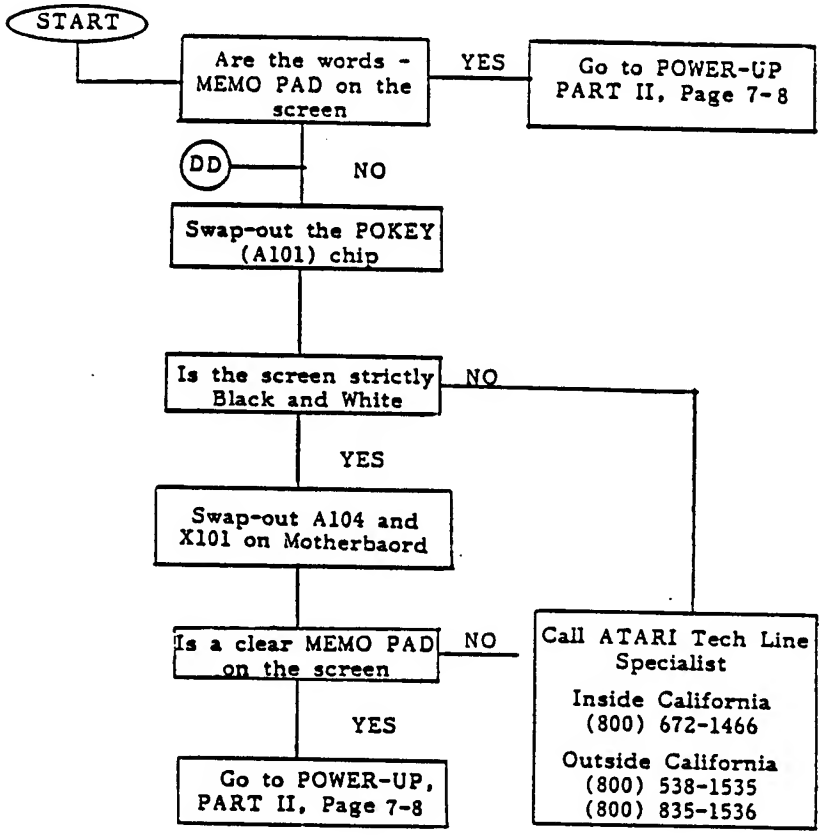

800 POWER-UP, PART II

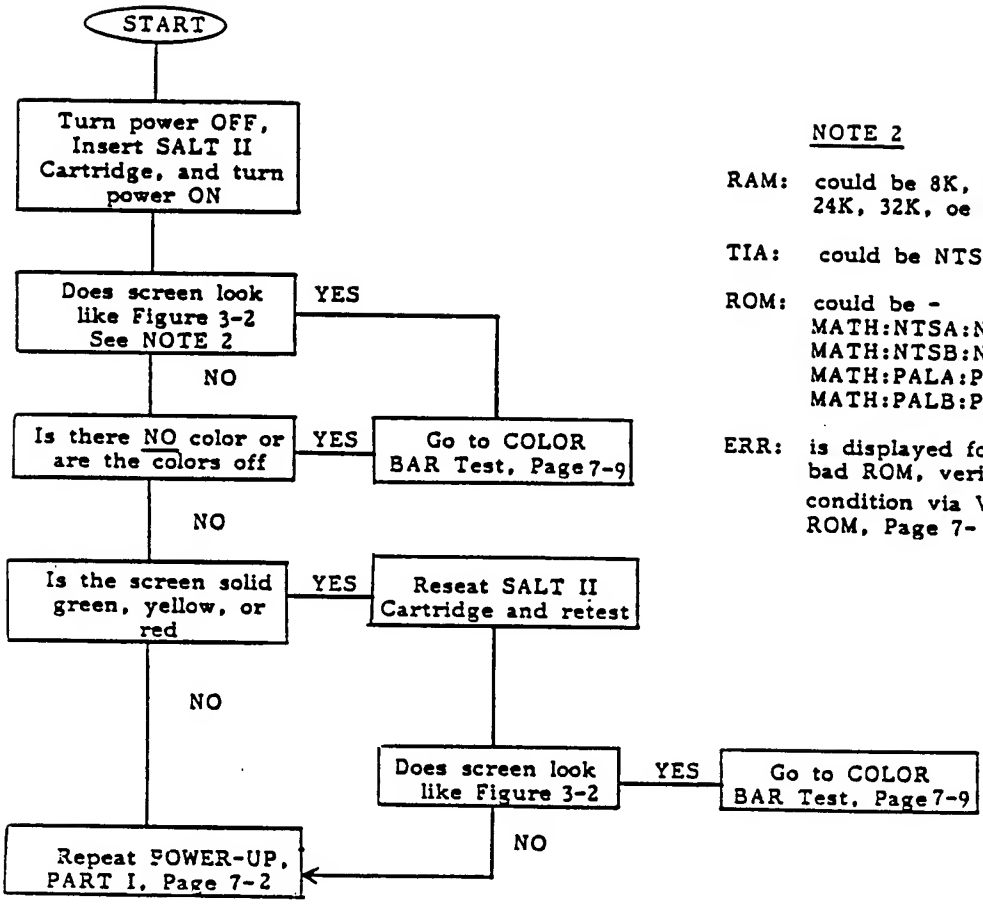

NOTE 2

RAM: could be 8K, 16K, 24K, 32K, oe 40K

TIA: could be NTSC or PAL

ROM: could be -
MATH:NTSA:NTSA
MATH:NTSB:NTSB
MATH:PALA:PALA
MATH:PALB:PALB

ERR: is displayed for any bad ROM, verify error condition via VERIFY ROM, Page 7-

COLOR BARS

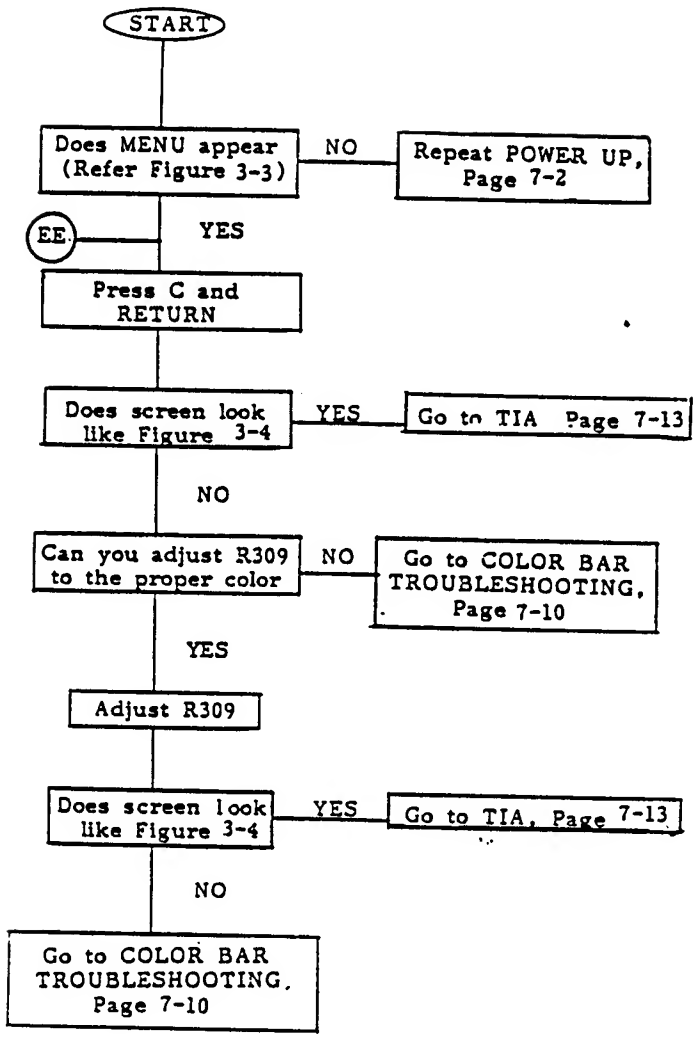
START
Does MENU appear (Refer Figure 3-3)
NO
Repeat POWER UP, Page 7-2
EE
YES
Press C and RETURN
Does screen look like Figure 3-4
YES
Go to TIA Page 7-13
NO
Can you adjust R309 to the proper color
NO
Go to COLOR BAR TROUBLESHOOTING, Page 7-10
YES
Adjust R309
Does screen look like Figure 3-4
YES
Go to TIA, Page 7-13
NO
Go to COLOR BAR TROUBLESHOOTING, Page 7-10

800 COLOR BAR TROUBLESHOOTING

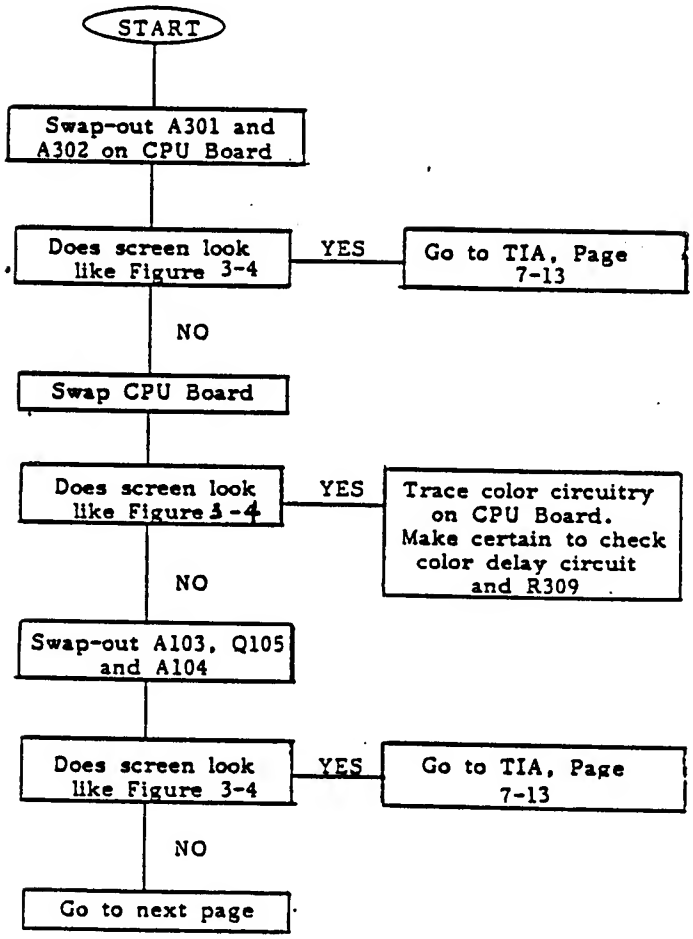

800 COLOR BAR
TROUBLESHOOTING (cont)

Verify that each of the following levels and/or signal wave forms exist before proceeding to the next step. Use SALT II, COLOR BARS, locked into the continuous mode.

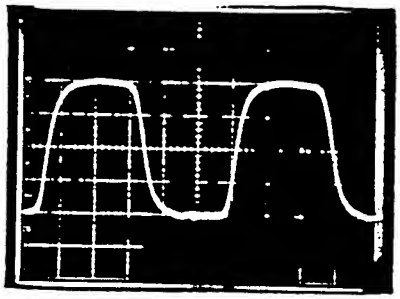

Is there 3.58MHz oscillation at R106 on Motherboard Refer Figure

NO → Swap-out X101, Q102 and Q103

YES

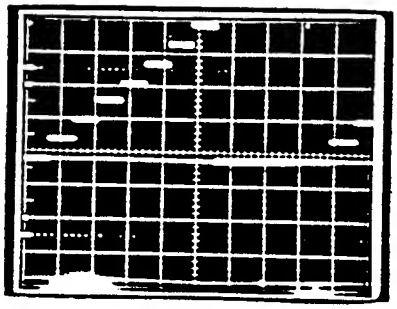

Is there input signal to base of Q105, Pin 2 Refer Figure

NO → Trace circuit back to previous step

YES

Is there output signal from emitter of Q105 Refer Figure

NO → Trace circuit back to previous step

YES

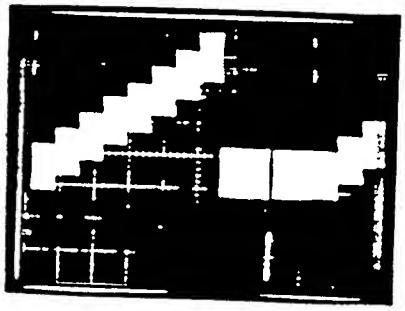

Is there signal at J115, Pin 20 Refer Figure

NO → Trace circuit back

YES

Go to next page

800 COLOR BAR TROUBLESHOOTING (cont)

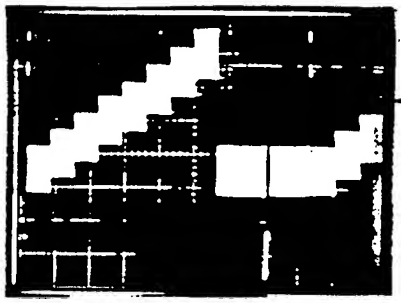

(FF)

Is there signal at both ends of L202 Refer Figure

NO → Trace circuit back to previous step

YES

Are the following present Refer Figure

+5 on Modulator, Pin 5

Signal on Modulator, Pins 2 and 4

NO → Trace circuit back to previous step

Verify Power Supply voltage at Pin 19 of J115

YES

Does screen look like Figure 3-4

YES → Go to TIA, Page 7-13.

NO

Call ATARI Tech Line Specialist

Inside California
(800) 672-1466

Outside California
(800) 538-1535
(800) 538-1536

TIA TEST

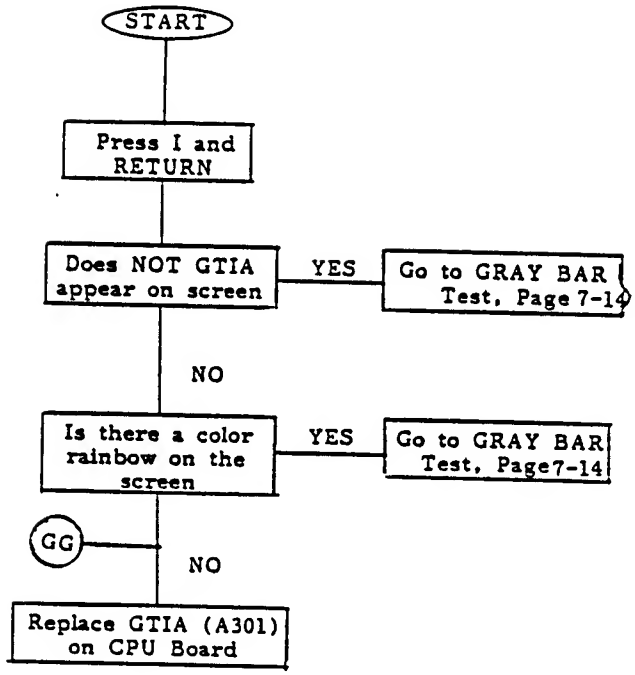
START
Press I and RETURN
Does NOT GTIA appear on screen
YES
Go to GRAY BAR Test, Page 7-14
NO
Is there a color rainbow on the screen
YES
Go to GRAY BAR Test, Page7-14
GG
NO
Replace GTIA (A301) on CPU Board

800 GREY BAR

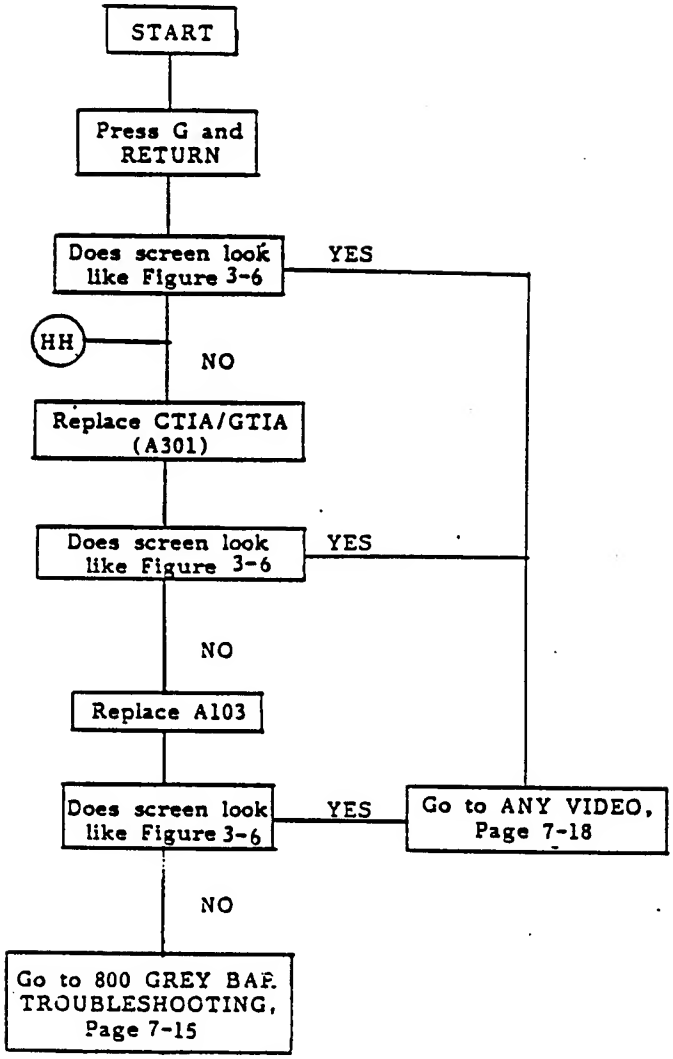
START
Press G and RETURN
Does screen look like Figure 3-6
YES
HH
NO
Replace CTIA/GTIA (A301)
Does screen look like Figure 3-6
YES
NO
Replace A103
Does screen look like Figure 3-6
YES
Go to ANY VIDEO, Page 7-18
NO
Go to 800 GREY BAR TROUBLESHOOTING, Page 7-15

800 GREY BAR TROUBLESHOOTING

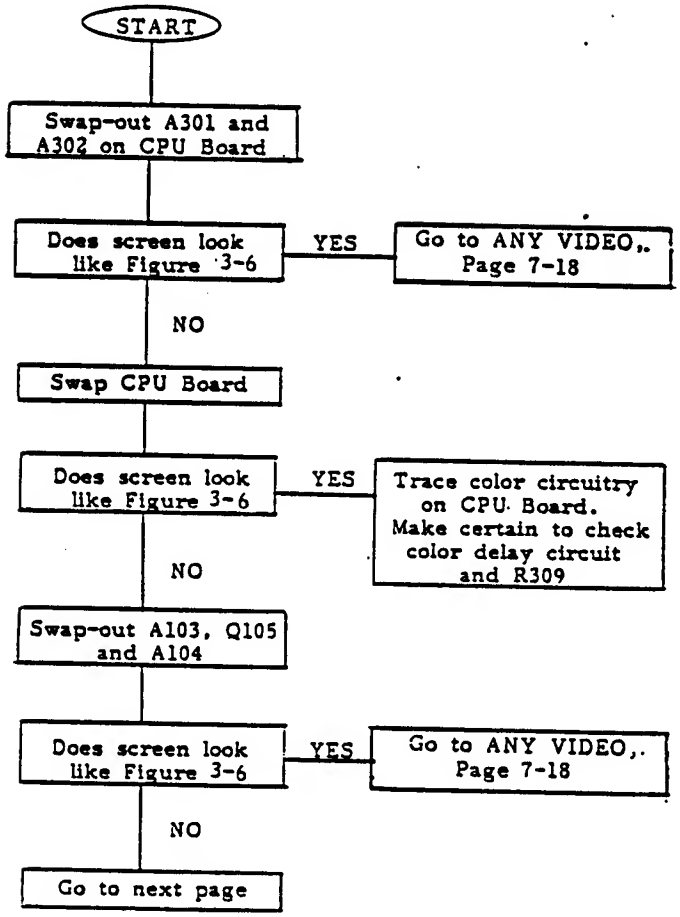

800 GREY BAR
TROUBLESHOOTING (cont)

Verify that each of the following levels and/or signal wave forms exist before proceeding to the next step. Use SALT II, COLOR BARS, locked into the continuous mode.

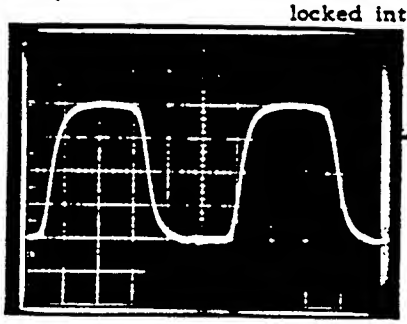

Is there 3.58MHz oscillation at R106 on Motherboard Refer Figure

NO → Swap-out X101, Q102 and Q103

YES

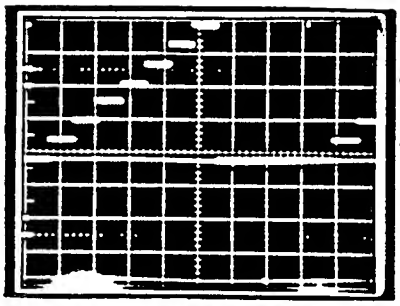

Is there input signal to base of Q105, Pin 2 Refer Figure

NO → Trace circuit back to previous step

YES

Is there output signal from emitter of Q105 Refer Figure

NO → Trace circuit back to previous step

YES

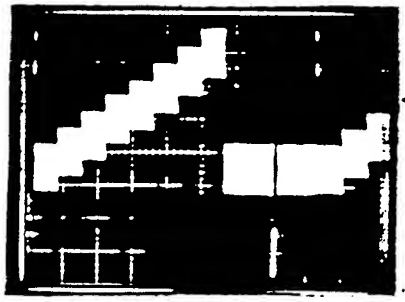

Is there signal at J115, Pin 20 Refer Figure

NO → Trace circuit back

YES

Go to next page

800 GREY BAR
TROUBLESHOOTING (cont)

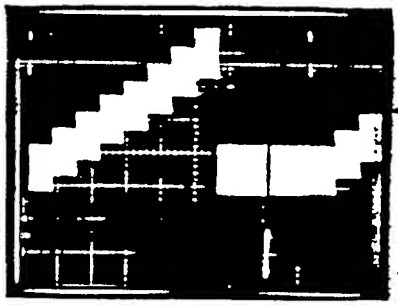

Is there signal at both ends of L202 Refer Figure

NO → Trace circuit back to previous step

YES

Are the following present Refer Figure

+5 on Modulator, Pin 5

Signal on Modulator, Pins 2 and 4

NO → Trace circuit back to previous step

Verify Power Supply voltage at Pin 19 of J115

YES

Does screen look like Figure 3-6.

YES → Go to ANY VIDEO, Page 7-18

NO

Call ATARI Tech Line Specialist

Inside California
(800) 672-1466

Outside California
(800) 538-1535
(800) 538-1536

800 ANY VIDEO

