MOTOROLA
SEMICONDUCTORS
3501 ED BLUESTEIN BLVD., AUSTIN, TEXAS 78721

MC6847
Non-Interlace
MC6847Y
Interlace

MOS
(N-CHANNEL, SILICON-GATE)

VIDEO DISPLAY GENERATOR

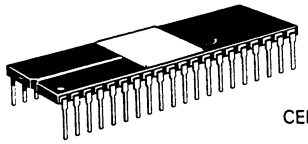

L SUFFIX
CERAMIC PACKAGE
CASE 715

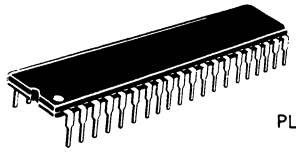

P SUFFIX
PLASTIC PACKAGE
CASE 711

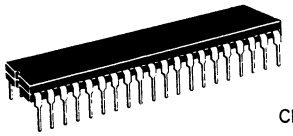

S SUFFIX
CERDIP PACKAGE
CASE 734

MC6847/MC6847Y VIDEO DISPLAY GENERATOR (VDG)

The video display generator (VDG) provides a means of interfacing the M6800 microprocessor family (or similar products) to a standard color or black and white NTSC television receiver. Applications of the VDG include video games, process control displays, home computers, education, communications, and graphics applications.

The VDG reads data from memory and produces a video signal which will allow the generation of alphanumeric or graphic displays. The generated video signal may be modulated to either channel 3 or 4 by using the compatible MC1372 (TV chroma and video modulator). This modulated signal is suitable for reception by a standard unmodified television receiver. A typical TV game is shown in Figure 1.

- Compatible with the M6800 Family, the M68000 Family, and Other Microprocessor Families
- Generates Four Different Alphanumeric Display Modes, Two Semigraphic Modes, and Eight Graphic Display Modes
- The Alphanumeric Modes Display 32 Characters Per Line by 16 Lines Using Either the Internal ROM or an External Character Generator
- Alphanumeric and Semigraphic Modes May Be Mixed on a Character-by-Character Basis
- Alphanumeric Modes Support Selectable Inverse on a Character-by-Character Basis
- Internal ROM May Be Mask Programmed with a Custom Pattern
- Full Graphic Modes Offer 64 × 64, 128 × 64, 128 × 96, 128 × 192, or 256 × 192 Densities
- Full Graphic Modes Use One of Two 4-Color Sets or One of Two 2-Color Sets
- Compatible with the MC1372 and MC1373 Modulators Via Y, R-Y (ϕA), and B-Y (ϕB) Interface
- Compatible with the MC6883 (74LS783) Synchronous-Address Multiplexer
- Available in Either an Interlace (NTSC Standard) or Non-interlace Version

PIN ASSIGNMENT

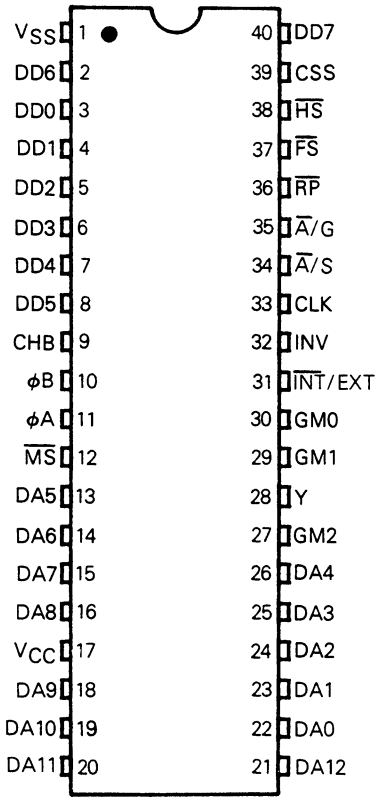

©MOTOROLA INC., 1984

FIGURE 1 — BLOCK DIAGRAM OF A TV GAME USING THE VDG AND THE MC6809E MPU

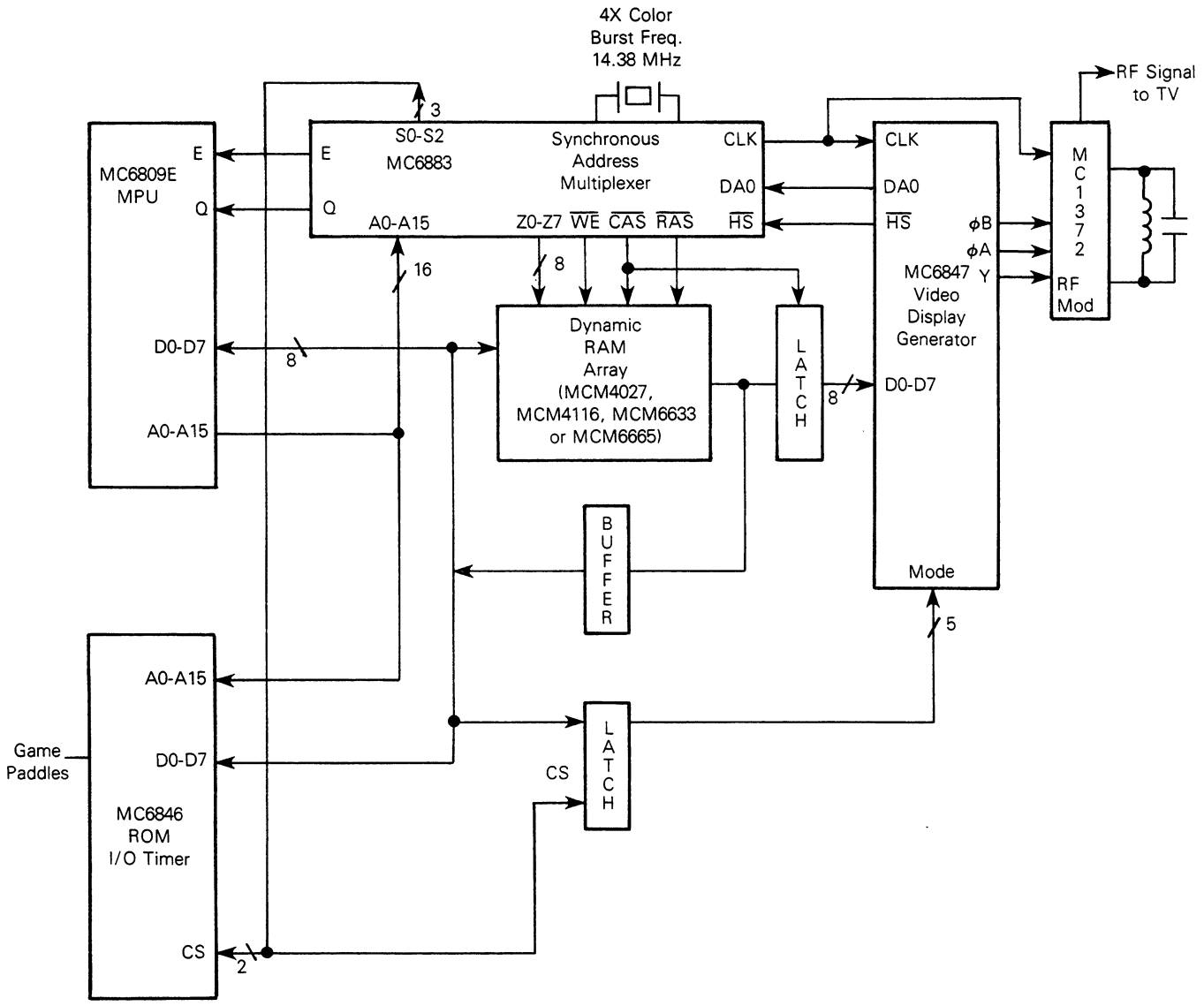

ELECTRICAL SPECIFICATIONS

ABSOLUTE MAXIMUM RATINGS

Characteristics	Symbol	Value	Unit
Supply Voltage	V_{CC}	−0.3 to +7.0	V
Input Voltage Any Pin	V_{in}	−0.3 to +7.0	V
Operating Temperature	T_A	0 to +70	°C
Storage Temperature	T_{stg}	−65 to +150	°C

This device contains circuitry to protect the inputs against damage due to high static voltages or electric fields; however, it is advised that normal precautions be taken to avoid application of any voltage higher than maximum rated voltages to this high impedance circuit. Reliability of operation is enhanced if unused inputs are tied to an appropriate logic voltage (e.g., either V_{SS} or V_{CC}).

THERMAL CHARACTERISTICS

Characteristics	Symbol	Value	Unit
Thermal Resistance Ceramic Plastic Cerdip	θ_{JA}	 50 100 60	°C/W

DC (STATIC) CHARACTERISTICS (V_{CC} = 5.0 V ±5%, V_{SS} = 0.0 V, T_A = 0°C to 70°C unless otherwise noted)

Characteristic	Symbol	Min	Typ	Max	Unit
Input High Voltage CLK Other Inputs	V_{IH}	 V_{SS}+2.4 V_{SS}+2.0	 – –	 V_{CC} V_{CC}	V
Input Low Voltage CLK Other Inputs	V_{IL}	 V_{SS}−0.3 V_{SS}−0.3	 – –	 V_{SS}+0.6 V_{SS}+0.8	V
Input Leakage Current, Force 5.25 V on Pin Under Test, V_{CC} = 5.5 V CLK, GM0-GM2, INV, $\overline{INT}$/EXT, $\overline{MS}$, V_{SS}, DD0-DD7, $\overline{A}$/S, $\overline{A}$/G	I_{in}	–	–	2.5	μA
Three-State (Off State) Input Current DA0-DA12 Force 2.4 V and 0.4 V on Pin Under Test	I_{OL}	–	–	±10	μA
Output High Voltage (C_{Load} = 30 pF, I_{Load} = −100 μA — $\overline{RP}$, $\overline{HS}$, $\overline{FS}$	V_{OH}	2.4	–	–	V
Output High Voltage (C_{Load} = 55 pF, I_{Load} = −100 μA) — DA0-DA12	V_{OH}	2.4	–	–	V
Output Low Voltage (C_{Load} = 30 pF, I_{Load} = 1.6 mA) — RP, HS, FS	V_{OL}	–	–	V_{SS}+0.4	V
Output Low Voltage (C_{Load} = 55 pF, I_{Load} = 1.6 mA) — DA0-DA12	V_{OL}	–	–	V_{SS}+0.4	V
Output High Current (Sourcing) (V_{OH} = 2.4 V) — All Outputs (Except φA, φB, Y, and CHB)	I_{OH}	−100	–	–	μA
Output Low Current (Sinking) (V_{OL} = 0.4 V) — All Outputs (Except φA, φB, Y, and CHB)	I_{OL}	1.6	–	–	mA
Input Capacitance (V_{in} = 0, T_A = 25°C, f = 1.0 MHz) — All Inputs	C_{in}	–	–	7.5	pF
Internal Power Dissipation (Measured at T_A = 0 to 70°C)	P_{INT}	–	–	600	mW
Chroma φA Voltage (Figure 3) (C_{Load} = 20 pF, R_{Load} = 100 kΩ) (Note 1)	V_{IH} V_R V_{OL}	1.8 1.34 0.8	2.0 1.5 1.0	2.2 1.66 1.2	V
Chroma φB Voltage (Figure 3) (C_{Load} = 20 pF, R_{Load} = 100 kΩ) (Note 1)	V_{IH} V_R V_{OL} V_{Burst}	1.8 1.34 0.80 1.07	2.0 1.5 1.0 1.25	2.2 1.66 1.2 1.43	V
Luminance Y Voltage (Figure 3) (C_{Load} = 20 pF, R_{Load} = 100 kΩ) (Voltage Synchronization) (Voltage Blank) (Voltage Black) (Voltage White Low) (Voltage White Medium) (Voltage White High) (Note 1)	 V_S V_{Blank} V_{Black} V_{WL} V_{WM} V_{WH}	 0.9 0.63 0.58 0.51 0.40 0.27	 1.0 0.77 0.72 0.65 0.54 0.42	 1.1 0.9 0.83 0.75 0.65 0.53	V
Chroma Bias Voltage (C_{Load} = 20 pF, R_{Load} = 100 kΩ)	V_R	0.27 V_{CC}	0.3 V_{CC}	0.33 V_{CC}	V
Resistor % of V_{SS} Tracking (Analog Outputs Linearity Error)	R_T	–	1.0	3.0	%

NOTE 1: The specified minimum and maximum number reflect performance of the VDG of the specified temperature range. Overlapping voltage levels will not occur. Refer to Figure 2.

POWER CONSIDERATIONS

The average chip-junction temperature, T_J, in °C can be obtained from:

$$T_J = T_A + (P_D \bullet \theta_{JA}) \quad (1)$$

Where:

$T_A \equiv$ Ambient Temperature, °C

$\theta_{JA} \equiv$ Package Thermal Resistance, Junction-to-Ambient, °C/W

$P_D \equiv P_{INT} + P_{PORT}$

$P_{INT} \equiv I_{CC} \times V_{CC}$, Watts — Chip Internal Power

$P_{PORT} \equiv$ Port Power Dissipation, Watts — User Determined

For most applications $P_{PORT} \ll P_{INT}$ and can be neglected. P_{PORT} may become significant if the device is configured to drive Darlington bases or sink LED loads.

An approximate relationship between P_D and T_J (if P_{PORT} is neglected) is:

$$P_D = K \div (T_J + 273°C) \quad (2)$$

Solving equations 1 and 2 for K gives:

$$K = P_D \bullet (T_A + 273°C) + \theta_{JA} \bullet P_D^2 \quad (3)$$

Where K is a constant pertaining to the particular part. K can be determined from equation 3 by measuring P_D (at equilibrium) for a known T_A. Using this value of K the values of P_D and T_J can be obtained by solving equations (1) and (2) iteratively for any value of T_A.

FIGURE 2 — PSEUDO ANALOG LUMINANCE RESISTOR CHAIN

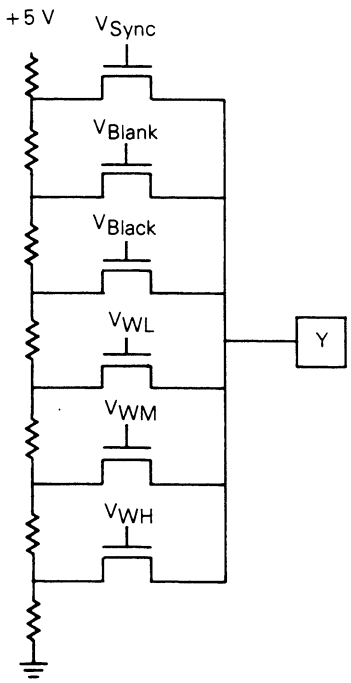

NOTE: The chrominance output chain is similar in design to the luminance chain.

AC (DYNAMIC) CHARACTERISTICS (V_{CC} = 5.0 V ±5%, T_A = 0°C to 70°C) (Load Circuit of Figure 3)

Characteristic		Symbol	Min	Max	Unit	Figure
CLK (Frequency (3.579545 Color Burst Frequency)		f	3.579535	3.597555	MHz	4
CLK Duty Cycle		CLK_{dc}	45	55	%	4
Clock Rise Time		t_{CLKr}	–	50	ns	4
Clock Fall Time		t_{CLKf}	–	50	ns	4
Clock Pulse Width		PW_{CLK}	120	160	ns	4
Horizontal Display Address Delay from Counter	DA0-DA3	t_{HDAD}	–	490	ns	4, 5, 6
	DA4	t_{HDA4D}	–	550	ns	5, 6
Horizontal Display Address Hold Time		t_{HDAH}	0	–	ns	4, 5, 6
		t_{HDA4H}	0	–		
Display Data Setup Time	CSS, INV, $\overline{A}$/S, $\overline{INT}$/EXT, DD0-DD7	t_{DDS}	70	–	ns	4, 5, 6
Display Data Hold Time	CSS, INV, $\overline{A}$/S, $\overline{INT}$/EXT, DD0-DD7	t_{DDH}	140	–	ns	4, 5, 6
Horizontal Sync ($\overline{HS}$) Delay	Fall	t_{DHSf}	–	550	ns	7
	Rise	t_{DHSr}	–	740		
Row Preset ($\overline{RP}$) Delay	Fall	t_{DRPf}	–	660	ns	7
	Rise	t_{DRDr}	–	540		
Vertical Display Address Delay from Counter	DA5-DA12	t_{VDAD}	–	6.0	µs	7
Vertical Display Address Hold Time		t_{VDAH}	–	220	ns	7
Field Sync ($\overline{FS}$) Delay	Fall	t_{DFSf}	–	520	ns	8
	Rise	t_{DFSr}	–	600		
Memory Select Low to Display Address High-Impedance		t_{DMST}	–	80	ns	9
Memory Select High to Display Address Valid		t_{DMSV}	–	400	ns	9
Chroma Rise and Fall Times						
(φA Rise Time)		$t_{rC\phi A}$	–	100	ns	12
		$t_{r\phi A}$	–	100		
(φA Fall Time)		$t_{fC\phi A}$	–	100		
		$t_{f\phi A}$	–	100		
(φB Rise Time)		$t_{rC\phi B}$	–	100		
		$t_{r\phi B}$	–	100		
(φB Fall Time)		$t_{fC\phi B}$	–	100		
		$t_{f\phi B}$	–	100		
Color Burst Rise Time on φB Output		t_{CBr}	–	100	ns	12
Color Burst Fall Time on φB Output		t_{CBf}	–	100	ns	12
Chroma Phase Delay (Measured with Respect to "Y" Output)						
φA		t_{YA}	–50	140	ns	11
φB		t_{YB}	–50	140		
Luminance Rise Time		t_{ry}	–	100	ns	12
Luminance Fall Time		t_{fy}	–	100	ns	12
Horizontal Sync Rise Time on Y Output		t_{Hr}	–	100	ns	12
Horizontal Sync Fall Time on Y Output		t_{Hf}	–	100	ns	12
Horizontal Blanking Rise Time on Y Output		t_{HBr}	–	100	ns	12
Horizontal Blanking Fall Time on Y Output		t_{HBf}	–	100	ns	12
Front Porch Duaration Time (7 × 1/f)		t_{FP}	1.8	2.4	µs	12
Back Porch Duration Time (17.5 × 1/f)		t_{BP}	4.5	5.1	µs	12
Left Border Duration Time (29.5 × 1/f)		t_{LB}	7.5	8.3	µs	12
Right Border Duration Time (28 × 1/f)		t_{RB}	7.5	8.3	µs	12
Color Burst Duration Time (10.5 × 1/f)		t_{CB}	2.7	3.2	µs	12

FIGURE 3 — TEST LOADS

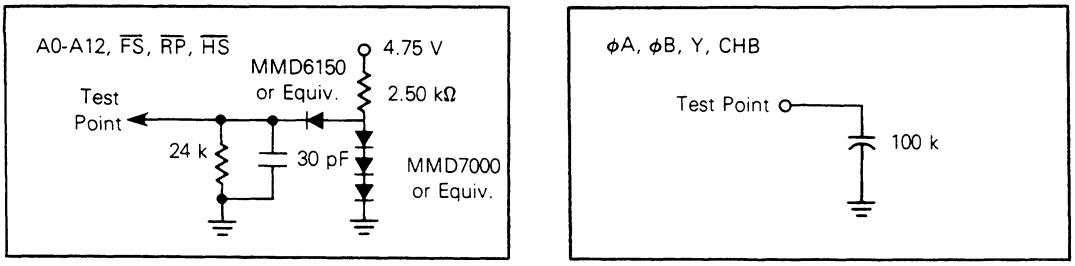

FIGURE 4 — CLOCK AND LONG CYCLE HORIZONTAL ACCESS TIMING

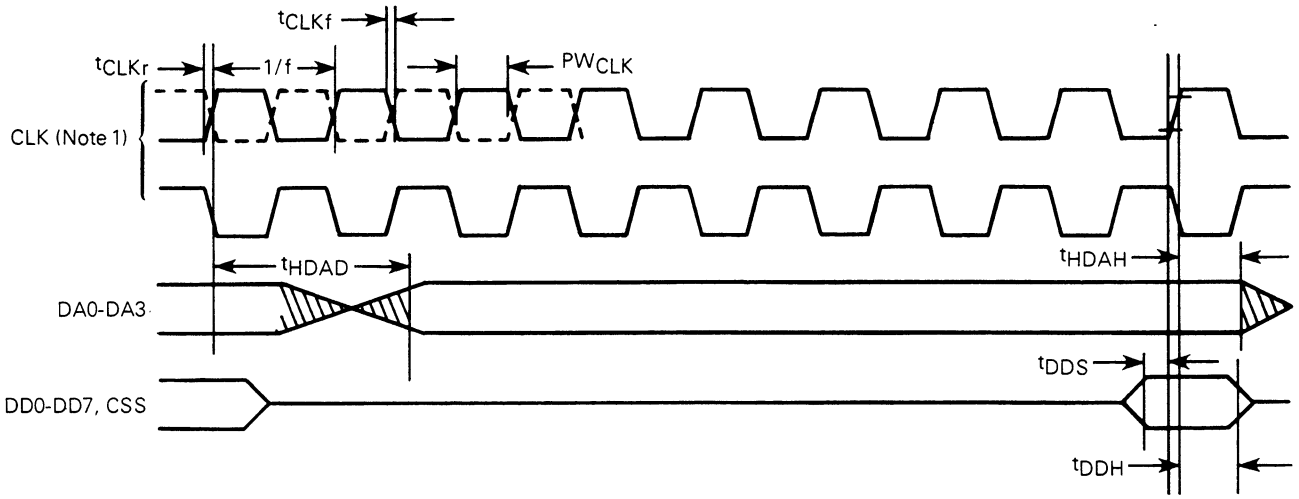

NOTES:
1. The VDG may power-up using either the rising or falling edge of the clock (dotted line).
2. Transitions of DA4-DA12 occur outside the display area. DA0-DA3 access the 16 bytes of data displayed during each scan line in the display area.
3. Long cycle timing applies to CG1, RG1, RG2, and RG3 modes (see Table 3). $\overline{A}/G$ is high; AS, $\overline{INT}/EXT$, and INV input levels do not affect the VDG in long cycle modes.
4. Usable RAM access time for the long cycle may be calculated using the following equation:
   $t_{RACL} = 8 \bullet 1/f_{max} - t_{HDAD_{max}} - t_{DDS_{min}} - t_{CLKr}$
   If address and data buffers are used, the access time must be adjusted accordingly.
5. All timing is measured to and from a low voltage of 0.8 volts and a high voltage of 2.0 volts unless otherwise specified.

FIGURE 5 — SHORT CYCLE HORIZONTAL ACCESS TIMING

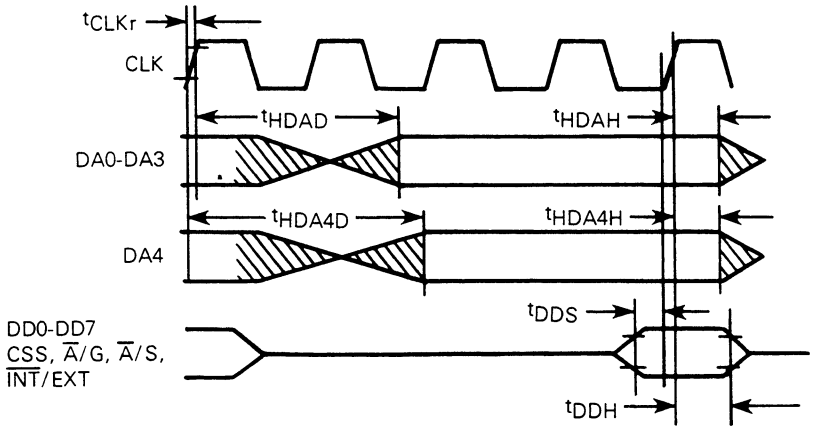

NOTES:
1. The VDG may power-up using either the rising or falling edge of the clock as shown in Figure 4.
2. Transitions of DA5-DA12 occur outside the display area. DA0-DA4 access the 32 bytes of data displayed during each scan line in the display area.
3. Short cycle timing applies to the four alphanumeric modes, two semigraphic modes, and to the CG2, CG3, CG6, RG6 modes (see Table 3). For the four graphic modes, $\overline{A}/G$ is high and the $\overline{A}/S$, $\overline{INT}/EXT$, and INV input levels do not affect the VDG.
4. Usable RAM access time for the short cycle may be calculated using the following equation:
   $t_{RACS} = 4 \bullet 1/f_{max} - t_{HDA4D_{max}} - t_{DDS_{min}} - t_{CLKr}$
   If address and data buffers are used, the access time must be adjusted accordingly.
5. All timing is measured to and from a low voltage of 0.8 volts and a high voltage of 2.0 volts unless otherwise specified.

FIGURE 6 — HORIZONTAL ADDRESS AND VALID DATA SETUP AND HOLD TIMING
(Timing Relationships Shown From Beginning of Line)

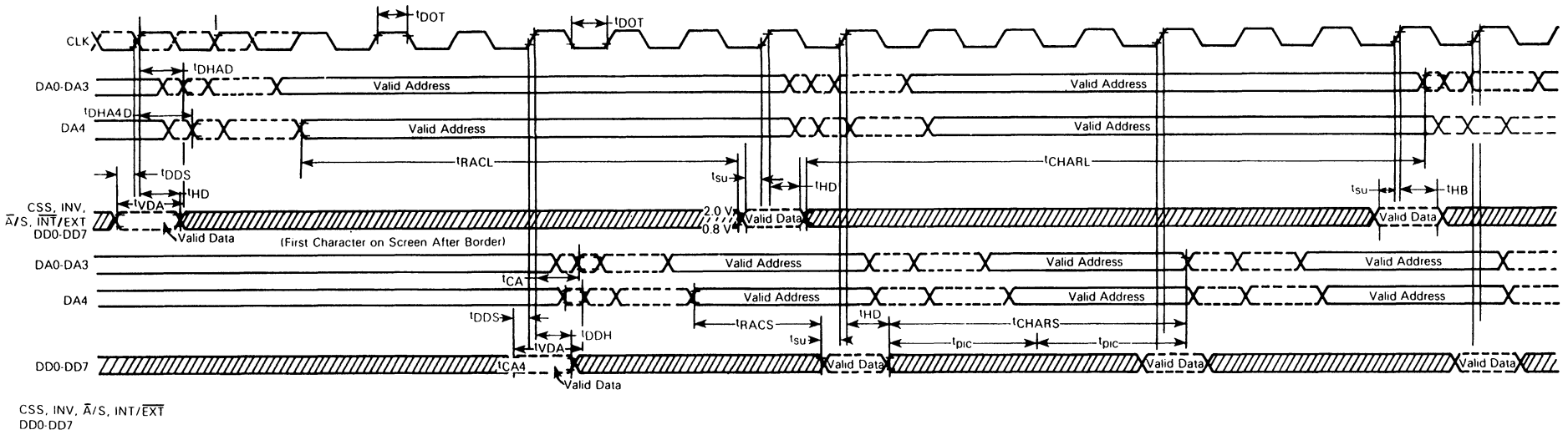

*Long element/access modes: CG1, RG1, RG2, RG3
**Short element/access mode: CG2, CG3, CG6, RG6, Alphanumerics, Semigraphics

FIGURE 7 — VERTICAL ADDRESS, ROW PRESET AND HORIZONTAL SYNCHRONIZATION TIMING

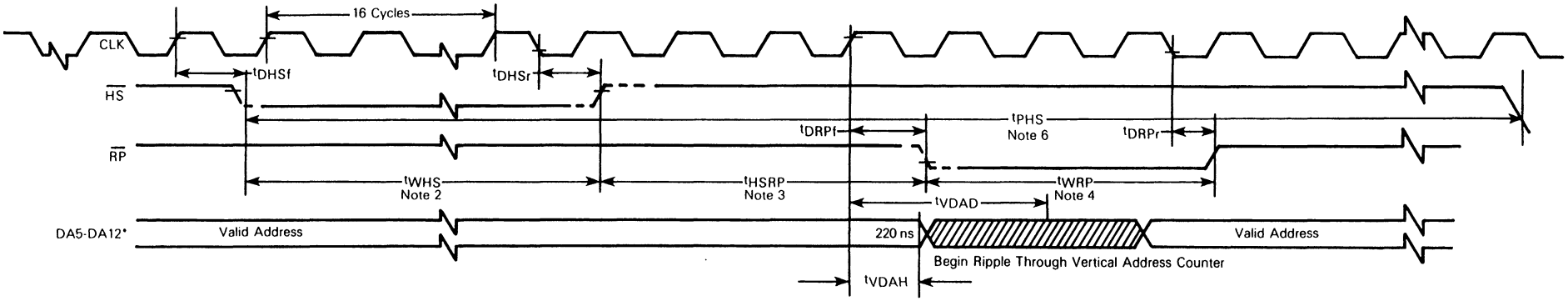

NOTES:
1. All timing is measured to and from a low voltage of 0.8 volts and a high voltage of 2.0 volts unless otherwise specified.
2. HS pulse width may be determined by $t_{WHS} = 16.5 \cdot 1/f - t_{DHSF} + t_{DHSr}$.
3. HS to RP may be determined by $t_{HSRP} = 3.5 \cdot 1/f - t_{DHSr} + t_{DRPf}$.
4. RP pulse width may be determined by $t_{WRP} = 3.5 \cdot 1/f - t_{DRPf} + t_{DRPr}$.
5. DA5-DA12 will change during the inactive portion of the display.
6. $t_{PHS} = 227.5 \cdot 1/f$.
7. $t_{DOT} = 1/f$.

FIGURE 8 — FIELD SYNC ($\overline{FS}$) TIMING

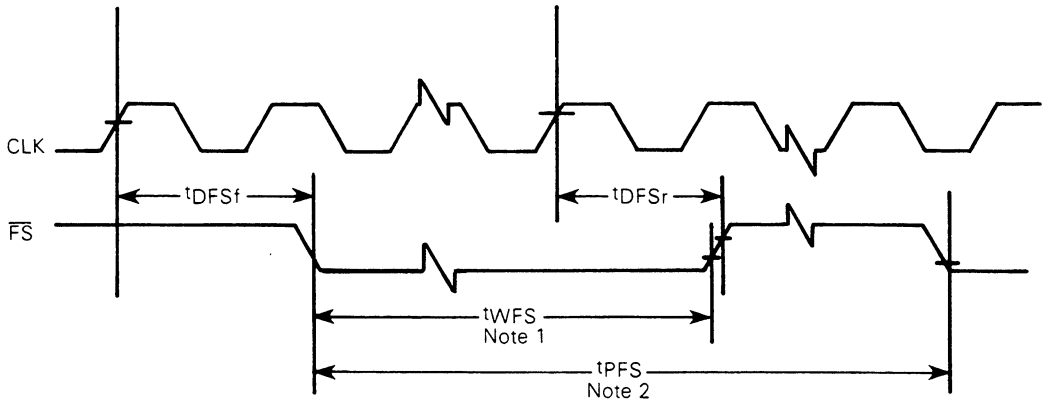

NOTES:
1. $t_{WFS} = 32 \cdot t_{PHST} = 32 \cdot (277.5 \cdot 1/f)$
2. $t_{PFS} = 262 \cdot t_{PHST} = 262 \cdot (227.5 \cdot 1/f)$ for MC6847
   $t_{PFS} = 262.5 \cdot t_{PHST} = 262.5 \cdot (227.5 \cdot 1/f)$ for MC6847Y

FIGURE 9 — MEMORY SELECT ($\overline{MS}$) TIMING

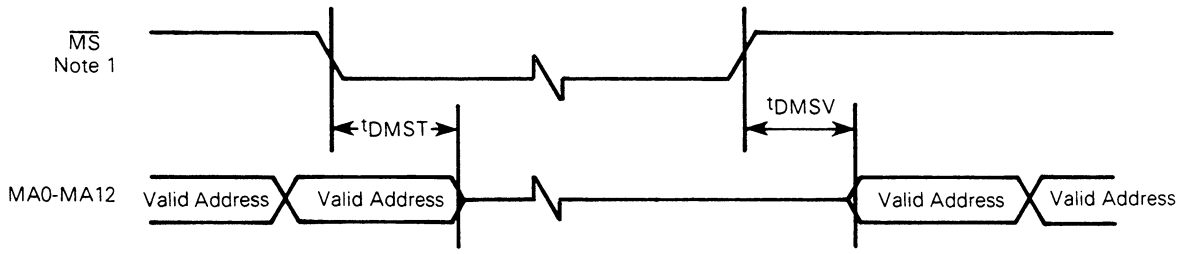

NOTES:
1. MS is asserted asynchronously with respect to CLK.

FIGURE 10 — VIDEO AND CHROMINANCE OUTPUT WAVEFORM RELATIONSHIPS

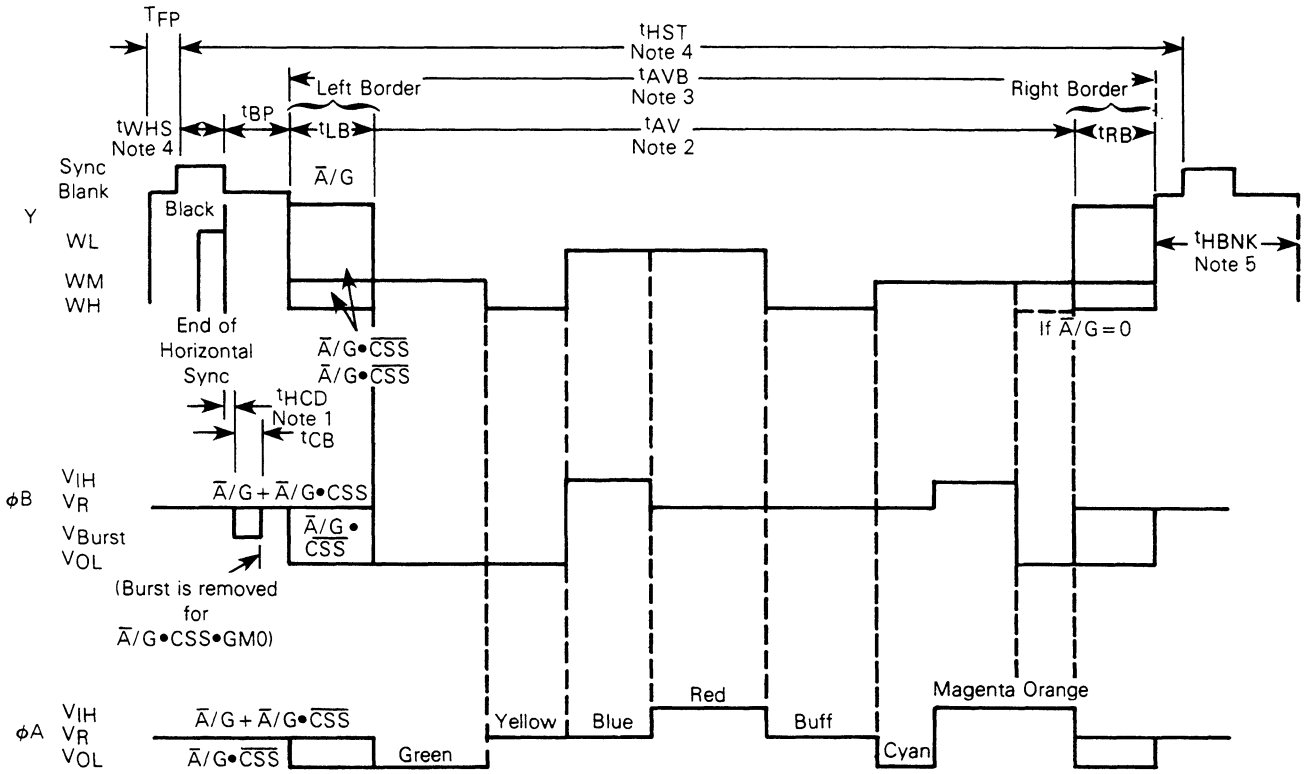

NOTES:
1. $t_{HCD} = 3.5 \cdot 1/f$
2. $t_{AV} = 128 \cdot 1/f$
3. $t_{AVB} = 185.5 \cdot 1/f$
4. Refer to Figure 7
5. $t_{HBNK} = 42 \cdot 1/f$

FIGURE 11 — CHROMA PHASE DELAY

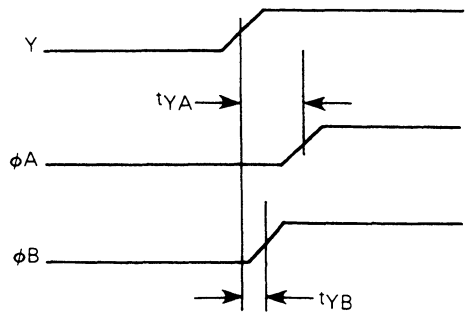

FIGURE 12 — TIMING DIAGRAMS
VIDEO RISE AND FALL TIMES (Illustrates Beginning of One Horizontal Line)

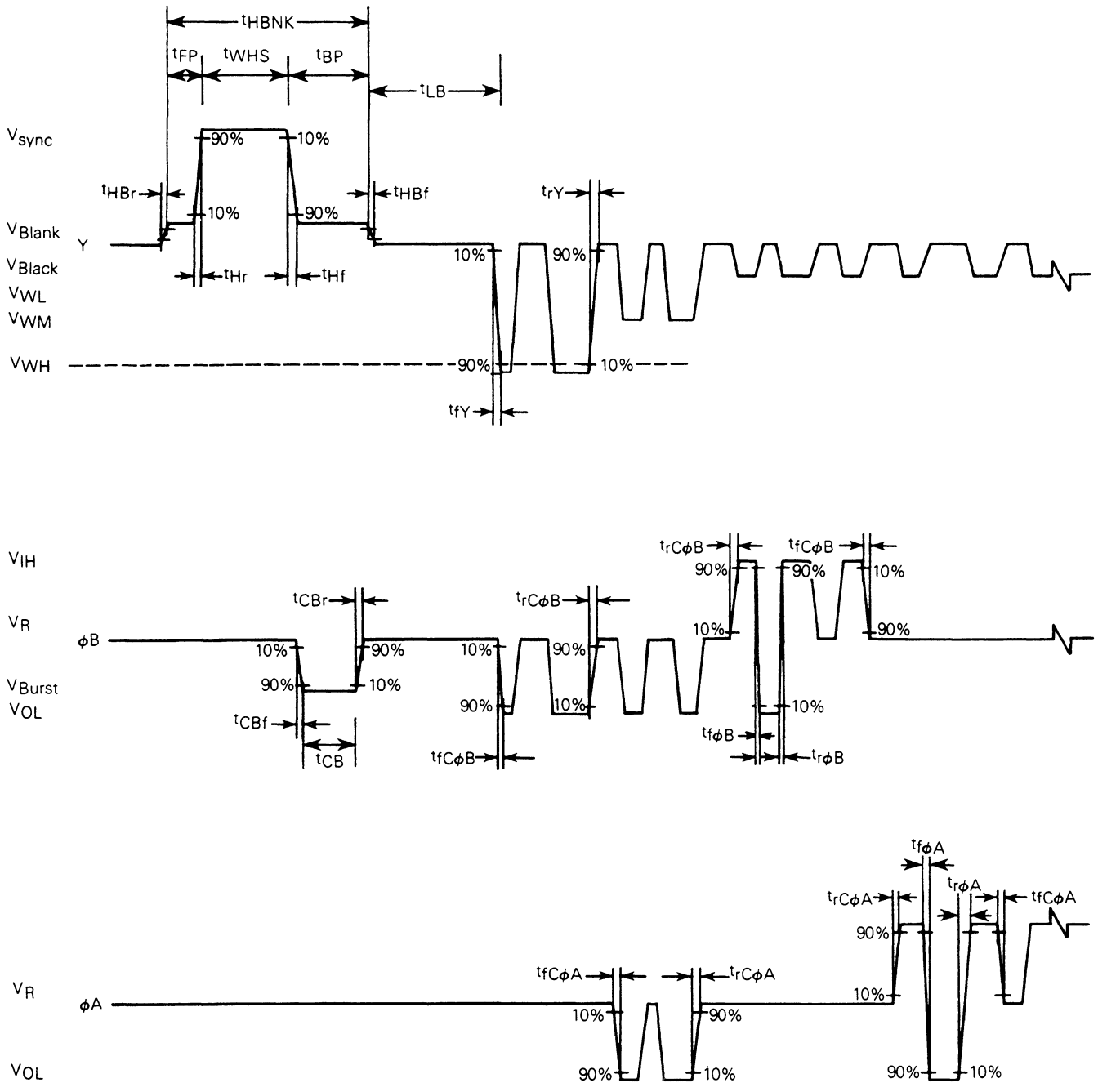

FIGURE 13 — DISPLAY AREA TIMING

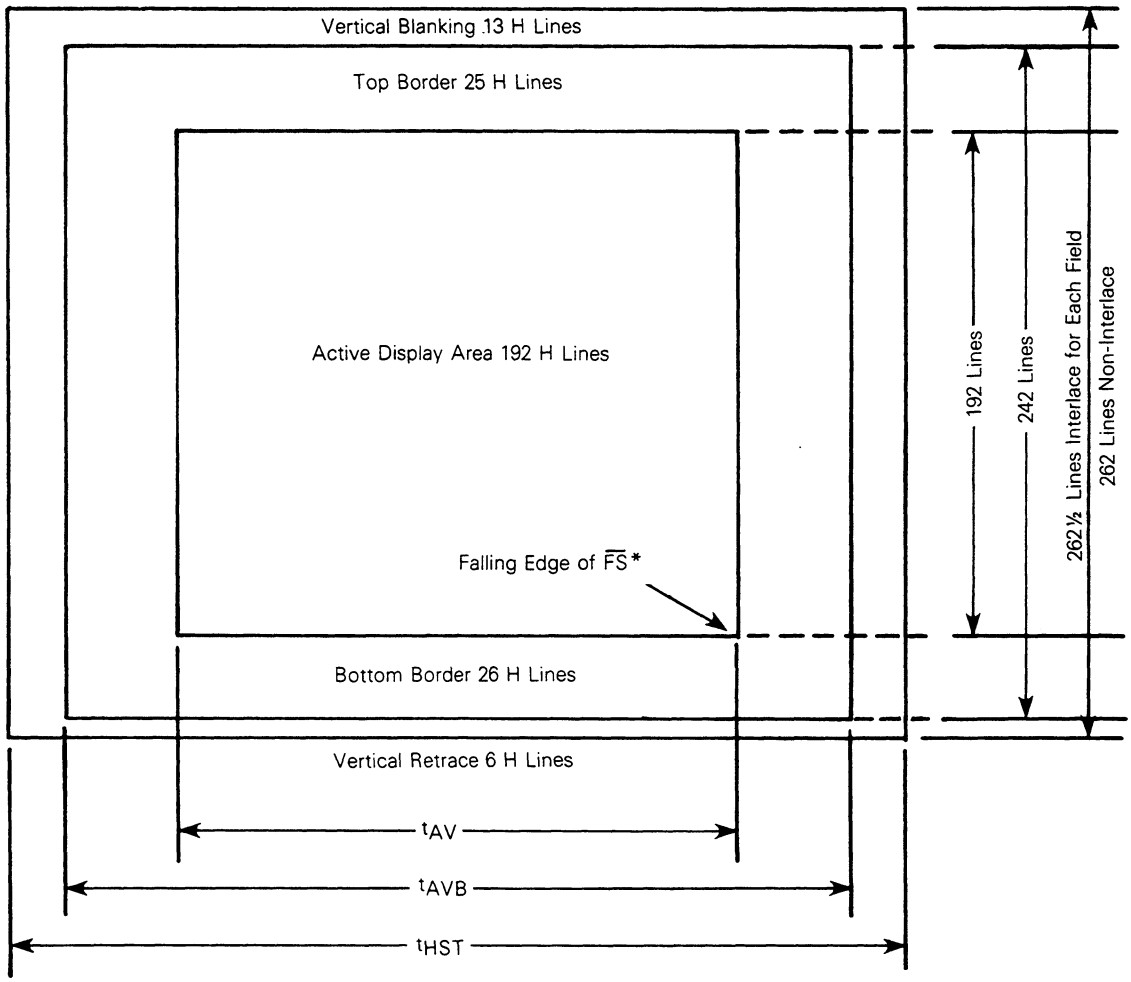

*Typically 2.4 μs after start of vertical blank.

FIGURE 14 — TYPICAL FORMAT OF THE TELEVISION SCREEN

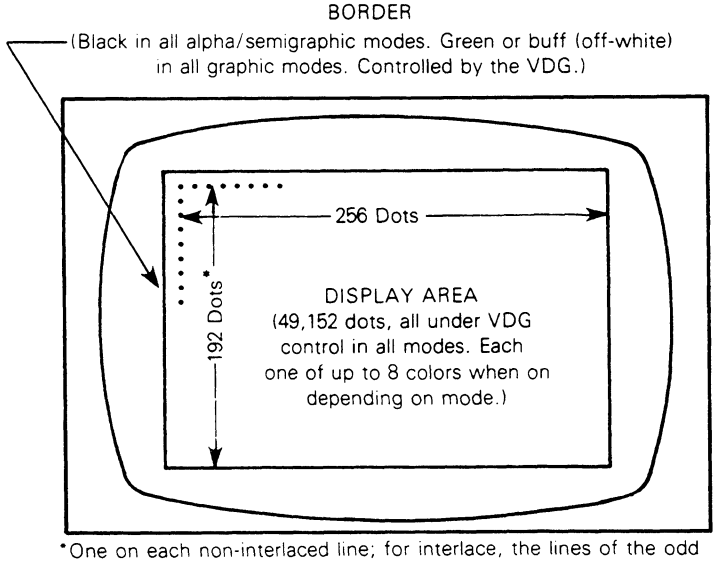

*One on each non-interlaced line; for interlace, the lines of the odd field are copied into the even field thus doubling the number of displayed dots.

VIDEO DISPLAY GENERATOR DESCRIPTION

The MC6847/MC6847Y video display generators provide a simple interface for display of digital information on a color monitor or standard color/black and white television receiver.

Television transmissions in North and South America and Japan conform to the National Television System Committee (NTSC) standards. This system is based on a field repetition rate of 60 fields per second. There are 525 interlaced lines per frame or one-half this number per field.

The MC6847 scans one field of 262 lines 60 times per second. The MC6847 non-interlace VDG is recommended for use in systems (i.e., TV games and personal computers) where absolute NTSC compatibility is not required. If NTSC compatibility is required, perhaps for caption overlays on broad-case signals, then the MC6847Y interlace VDG is recommended.

NOTE

A system with the MC6847 VDG and the MC1372 video modulator forms a transmitter, transmitting at 61.2 MHz (channel 3) or 67.25 MHz (channel 4) depending on component values chosen. This being a Class I TV device, care must be taken to meet FCC requirements Part 15, Subpart H. However, if the composite video output from the MC1372 were to drive the television directly, Section 15.7 of the FCC specification must be adhered to.

SIGNAL DESCRIPTION

DISPLAY ADDRESS OUTPUT LINES (DA0-DA12)

Thirteen address lines are used by the VDG to scan the display memory as shown in Figures 4-7. The starting address of the display memory is located at the upper left corner of the display screen. As the television sweeps from the left to right and top to bottom, the VDG increments the RAM display address. The timing for two accesses starting at the beginning of the line is shown in Figure 6. These lines are TTL compatible and may be forced into a high-impedance state whenever MS (pin 12) goes low. A0-A3 change during the active display area. A4 changes during the active display area in the alphanumerics, semigraphics, CG2, CG3, CG6, and RG6 modes. A5-A12 do not toggle within the active display area but instead, ripple through the address during border and blanking time.

DATA INPUTS (DD0-DD7)

Eight TTL compatible data lines are used to input data from RAM to be processed by the VDG. The data is then interpreted and transformed into luminance (Y) and chroma outputs (ϕA and ϕB).

POWER INPUTS — V_{CC} requires +5 volts ±5%. V_{SS} requires zero volts and is normally ground. The tolerance and current requirements of the VDG are specified in the Electrical Characteristics.

VIDEO OUTPUTS (ϕA, ϕB, Y, CHB) — These four analog outputs are used to transfer luminance and color information to a standard NTSC color television receiver, either via the MC1372 RF modulator or via drivers directly into Y, ϕA, ϕB television video inputs (see Figures 10, 11, and 12).

Luminance (Y) — This six level analog output contains composite sync, blanking and four levels of video luminance.

ϕA — This three level analog output is used in combination with ϕB and Y outputs to specify one of eight colors.

ϕB — This four level output is used in combination with ϕA and Y outputs to specify one of eight colors. Additionally, one analog level is used to specify the time of the color burst reference signal.

Chroma Bias (CHB) — This pin is an analog output and provides a DC reference corresponding to the quiescent value of ϕA and ϕB. CHB is used to guarantee good thermal tracking and minimize the variation between the MC1372 and MC6847. This pin, when pulled low, resets certain registers within the chip. In a user's system, this pin should not normally be used as an input. It is used mainly to enhance test capabilities within the factory.

FIGURE 15 — COLOR COMPOSITE VIDEO TO COLOR MONITOR

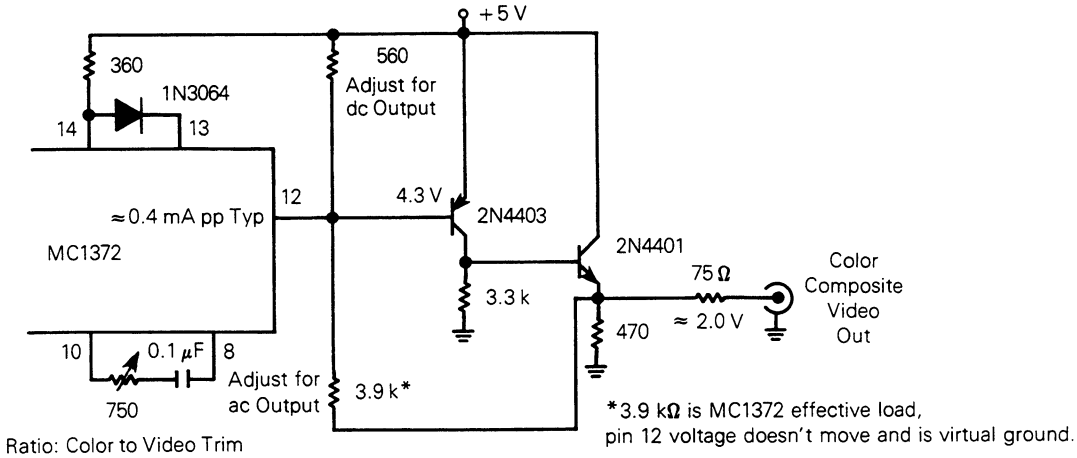

SYNCHRONIZING INPUTS ($\overline{MS}$, CLK)

THREE-STATE CONTROL — ($\overline{MS}$) is a TTL compatible input which, when low, forces the VDG address lines into a high-impedance state, as shown in Figure 9. This may be done to allow other devices (such as an MPU) to address the display memory (RAM).

CLOCK (CLK) — The VDG clock input (CLK) requires a 3.579545 MHz (standard color burst) TV crystal frequency square wave. The duty cycle of this clock must be between 45 and 55% since it controls the width of alternate dots on the television screen. The MC1372 RF modulator may be used to supply the 3.579545 MHz clock and has provisions for a duty cycle adjustment. The VDG will power-up using either the rising or falling edge of the clock. The dotted line on the CLK signal in Figure 4 indicates this characteristic of latching in data on either clock edge.

SYNCHRONIZING OUTPUTS ($\overline{FS}$, $\overline{HS}$, $\overline{RP}$)

Three TTL compatible outputs provide circuits, exterior to the VDG, with timing references to the following internal VDG states:

FIELD SYNC ($\overline{FS}$) — The high-to-low transition of the $\overline{FS}$ output coincides with the end of active display area (see Figure 8). During this time interval, an MPU may have total access to the display RAM without causing undesired flicker on the screen. The low-to-high transition of $\overline{FS}$ coincides with the trailing edge of the vertical synchronization pulse.

HORIZONTAL SYNC ($\overline{HS}$) — The $\overline{HS}$ pulse coincides with the horizontal synchronization pulse furnished to the television receiver by the VDG (see Figure 7). The high-to-low transition of the $\overline{HS}$ output coincides with the leading edge of the horizontal synchronization pulse and the low-to-high transition coincides with the trailing edge.

ROW PRESET ($\overline{RP}$) — If desired, an external character generator ROM may be used with the VDG. However, an external four bit counter must be added to supply row addresses. The counter is clocked by the $\overline{HS}$ signal and is cleared by the $\overline{RP}$ signal. $\overline{RP}$ pulses occur in all alphanumeric and semigraphics modes; no pulses are output in the full graphic modes. $\overline{RP}$ occurs after the first valid 12 lines. Therefore, use an $\overline{FS}$ clocked preloadable counter such as a 74LS161 as shown in Figures 7, 14, and 23.

MODE CONTROL LINES INPUT ($\overline{A}$/G, $\overline{A}$/S, $\overline{INT}$/EXT, GM0, GM1, GM2, CSS, INV)

Eight TTL compatible inputs are used to control the operating mode of the VDG. $\overline{A}$/S $\overline{INT}$/EXT, CSS, and INV may be changed on a character-by-character basis. The CSS pin is used to select between two possible alphanumeric colors when the VDG is in the alphanumeric mode and between two color sets when the VDG is in the Semigraphics 6 or full graphic modes. Table 1 illustrates the various modes that can be obtained using the mode control lines. There are two different types of memory access concerning these modes, they are a short and a long access cycle, which differ by a

FIGURE 16 — EXTERNAL CHARACTER GENERATOR ROW COUNTER FOR MC6847

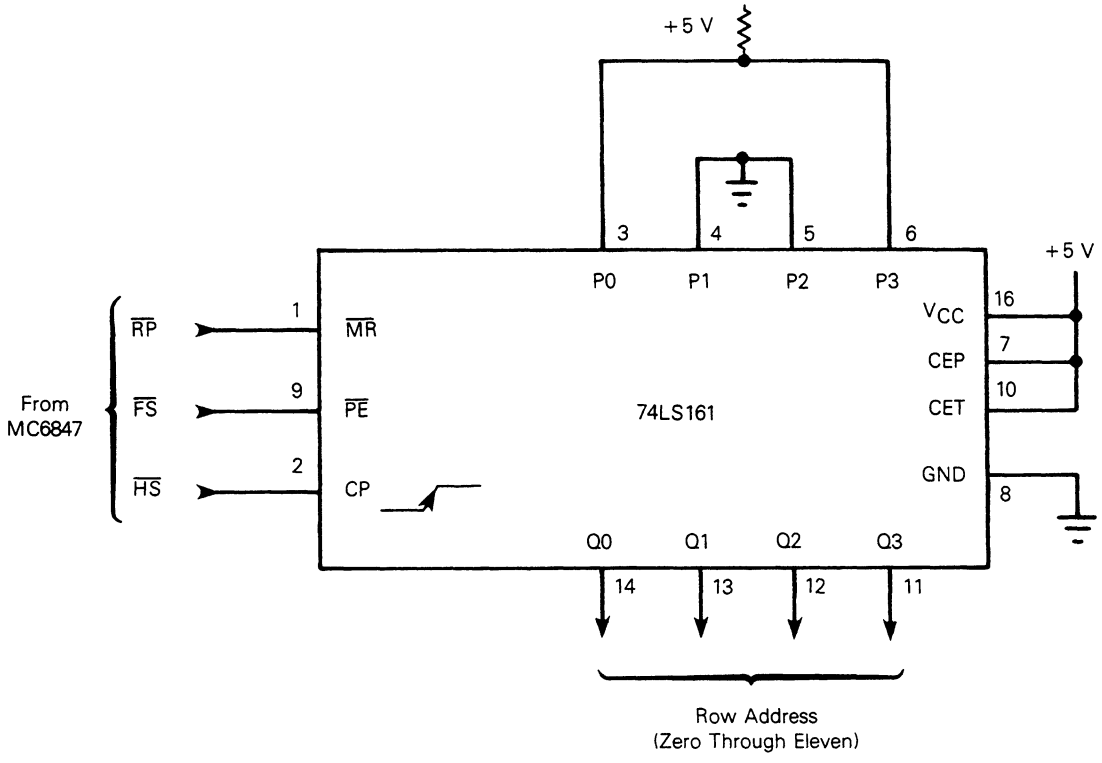

TABLE 1 — MODE CONTROL LINES (INPUTS)

$\overline{A}/G$	$\overline{A}/S$	$\overline{INT}/EXT$	INV	GM2	GM1	GM0	Alpha/Graphic Mode Select	# of Colors
0	0	0	0	X	X	X	Internal Alphanumerics	2
0	0	0	1	X	X	X	Internal Alphanumerics Inverted	
0	0	1	0	X	X	X	External Alphanumerics	
0	0	1	1	X	X	X	External Alphanumerics Inverted	
0	1	0	X	X	X	X	Semigraphics 4 (SG4)	8
0	1	1	X	X	X	X	Semigraphics 6 (SG6)	8
1	X	X	X	0	0	0	64 × 64 Color Graphics One (CG1)	4
1	X	X	X	0	0	1	128 × 64 Resolution Graphics One (RG1)	2
1	X	X	X	0	1	0	128 × 64 Color Graphics Two (CG2)	4
1	X	X	X	0	1	1	128 × 96 Resolution Graphics Two (RG2)	2
1	X	X	X	1	0	0	128 × 96 Color Graphics Three (CG3)	4
1	X	X	X	1	0	1	128 × 192 Resolution Graphics Three (RG3)	2
1	X	X	X	1	1	0	128 × 192 Color Graphics Six (CG6)	4
1	X	X	X	1	1	1	256 × 192 Resolution Graphics Six (RG6)	2

shift of one full 3.58 MHz cycle. One of the differences between these access times, in the short access time frame, is a shift of one full 3.58 MHz cycle from the corresponding normal long access time frame, as shown in Figure 6. The modes using short access times read memory twice as often as the long access modes.

OPERATION OF THE VDG

A simplified block diagram of the VDG is shown in Figure 17a and a detailed block diagram is shown in Figure 17b.

The externally generated 3.58 MHz color burst clock drives the VDG. Referring to Figures 11 and 12, note that the horizontal screen span from blanking to blanking is 193.1 clock periods ($\approx 53.95\ \mu s$). The display window is offset from the left-hand edge by 283 periods and lasts for 128 periods ($35.75\ \mu s$). Of the 242 lines on the vertical screen from blanking to blanking, 192 lines are used for the display. The display window is offset from the top by 25 lines. Under the constraint of the master clock, the smallest display element possible for the VDG is half period of the 3.58 MHz clock wide by one scan line high. All other display elements are multiples of this basic size.

DISPLAY MEMORY ADDRESS DRIVERS

The address drivers normally drive the video refresh address into the display memory so characters may be displayed on the CRT. When the memory select pin (MS) is pulled low by an external decoder, the driver outputs go to a high-impedance state so external three-state drivers may switch the MPU produced address onto the display memory address bus; the MPU may directly manipulate data in the display memory.

VIDEO TIMING AND CONTROL

This subsystem of the VDG includes the mode decoding, timing generation, and associated row counter logic, and uses the 3.58 MHz color frequency to generate horizontal and vertical timing information (via linear shift register counters), which the video and chroma encoder uses to generate color video information. The horizontal timing for the VDG is summarized in Figure 7. Ten and one-half cycles of the 3.58 MHz subcarrier are transmitted on the back porch of every horizontal blanking period. This color burst is suppressed during vertical sync and equalizing intervals. Color burst is also suppressed in the most dense two color graphic modes. This leads to some interesting rainbow effects on the display which is frequency and pattern dependent. The vertical timing for the VDG is given in Figure 18. Vertical retrace is initiated by the luminance signal being brought to the blanking level. The vertical blanking period begins with three lines of equalizing pulses followed by three lines of serrated vertical sync pulses followed by three more lines of equalizing pulses. The remaining vertical blanking period contains the normal horizontal sync pulses. The equalizing and serration pulses are at half line frequency. Notice the difference in spacing between the last horizontal sync pulse and the first equalizing pulse in even and odd fields. It is the half line difference between fields that produces the interlaced picture in a frame. Vertical timing between fields for the non-interlaced VDG, on the other hand, is identical. The equalizing and serration pulses are, however, at the horizontal frequency.

The 3.58 MHz color frequency is also used to clock the video shift register load counter. This counter and the video shift clock inhibit circuitry derive the dot-clock for the output of the video shift registers and the load signals for the video shift registers' input latches. The vertical and horizontal address counters generate the addresses for the external display memory.

INTERNAL CHARACTER GENERATOR ROM

Since many uses of the VDG will involve the display of alphanumeric data, a character-generator ROM is included on the chip. This ROM will generate 64 standard 5 × 7 dot matrix characters from standard 6-bit ASCII input. A standard character set is included in the MC6847 although the ROM is custom programmable.

INTERNAL/EXTERNAL CHARACTER GENERATOR MULTIPLEXER

The internal/external multiplexer allows the use of either the internal ROM or an external character generator. This multiplexer may be switched on a character-by-character basis to allow mixed internal and external characters on the CRT. The external character may be any desired dot-pattern in the standard 8 × 12 one-character display matrix, thus allowing the maximum 256 × 192 screen density.

FIGURE 17a — SIMPLIFIED VDG BLOCK DIAGRAM

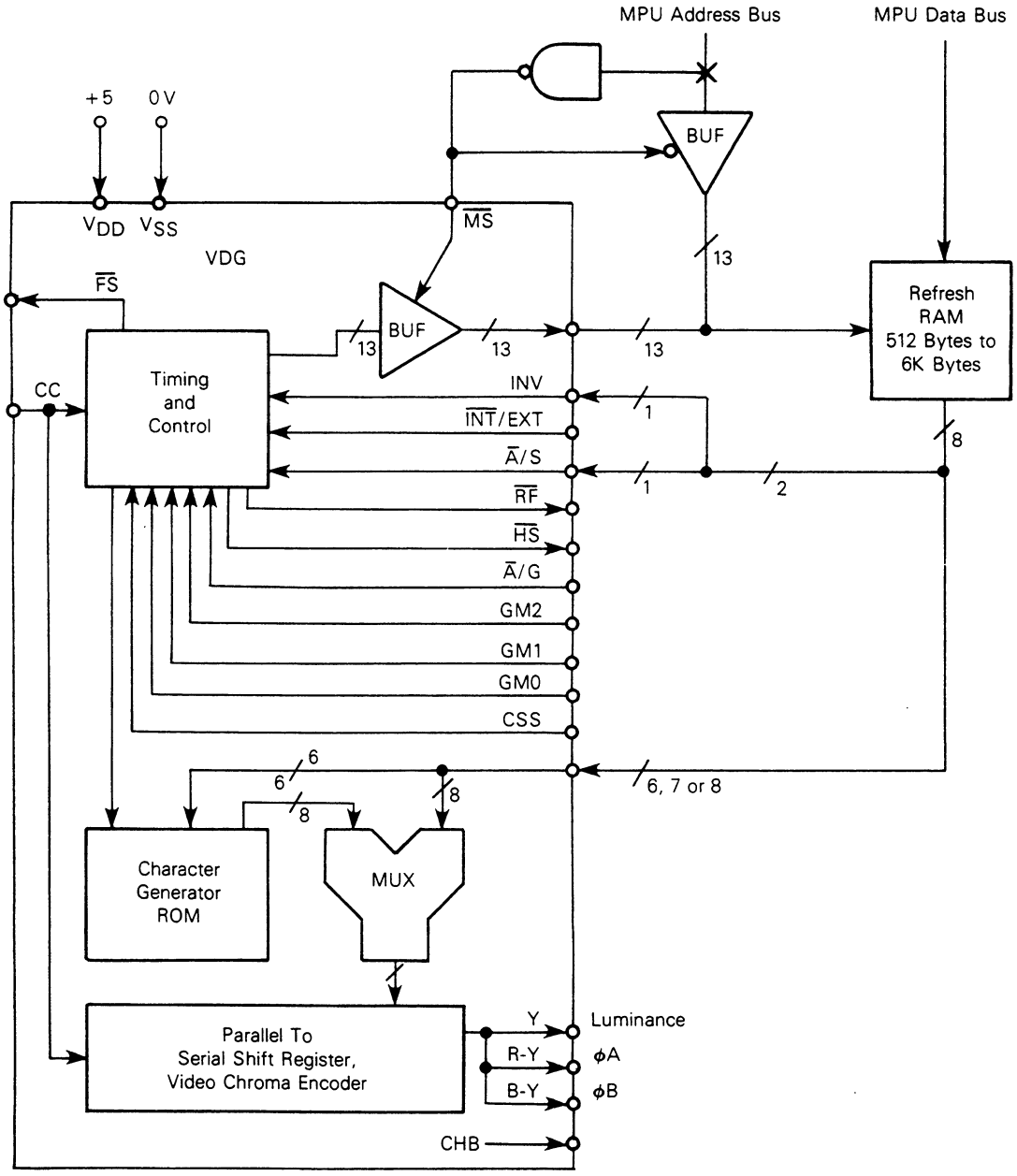

VIDEO AND COLOR SUBSYSTEM

The 8-bit output of the internal/external multiplexer is serialized in an 8-bit shift register clocked at the dot-clock frequency.

The luminance information from the shift register is summed with the horizontal and vertical sync signals to produce a composite video signal less the chrominance information, called Y. The luminance signal, Y, and the two chrominance outputs, ϕA (R-Y) and ϕB (B-Y), can be combined (modulated) by an MC1372 into a composite video signal with color. Figures 8, 9, 10, and 16 show the relationship between the luminance and chrominance signals and the resultant color.

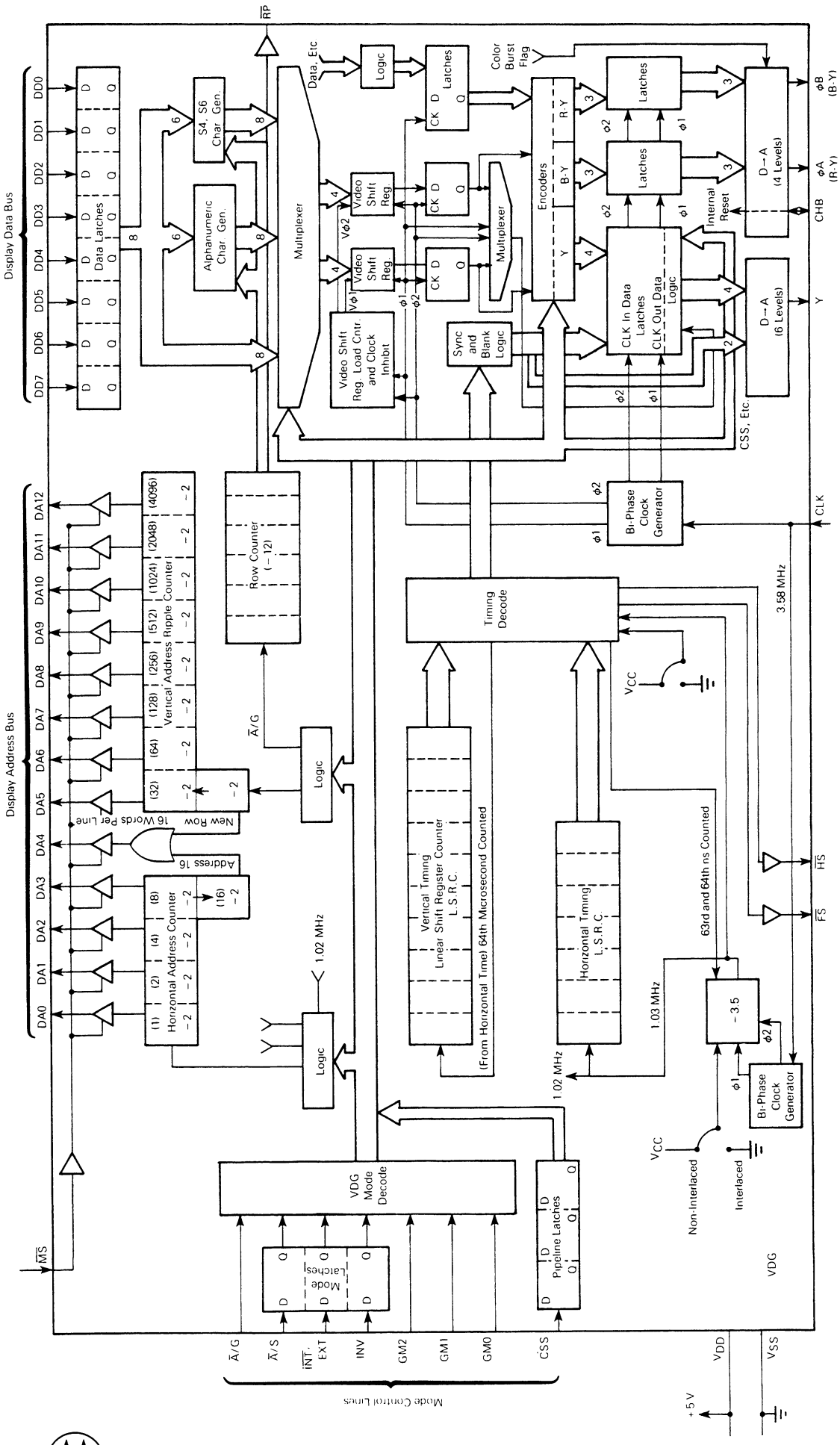

FIGURE 17b — DETAILED VDG BLOCK DIAGRAM

FIGURE 18 — NON-INTERLACE VERTICAL TIMING
(For Interlace Vertical Timing Use Inserts)

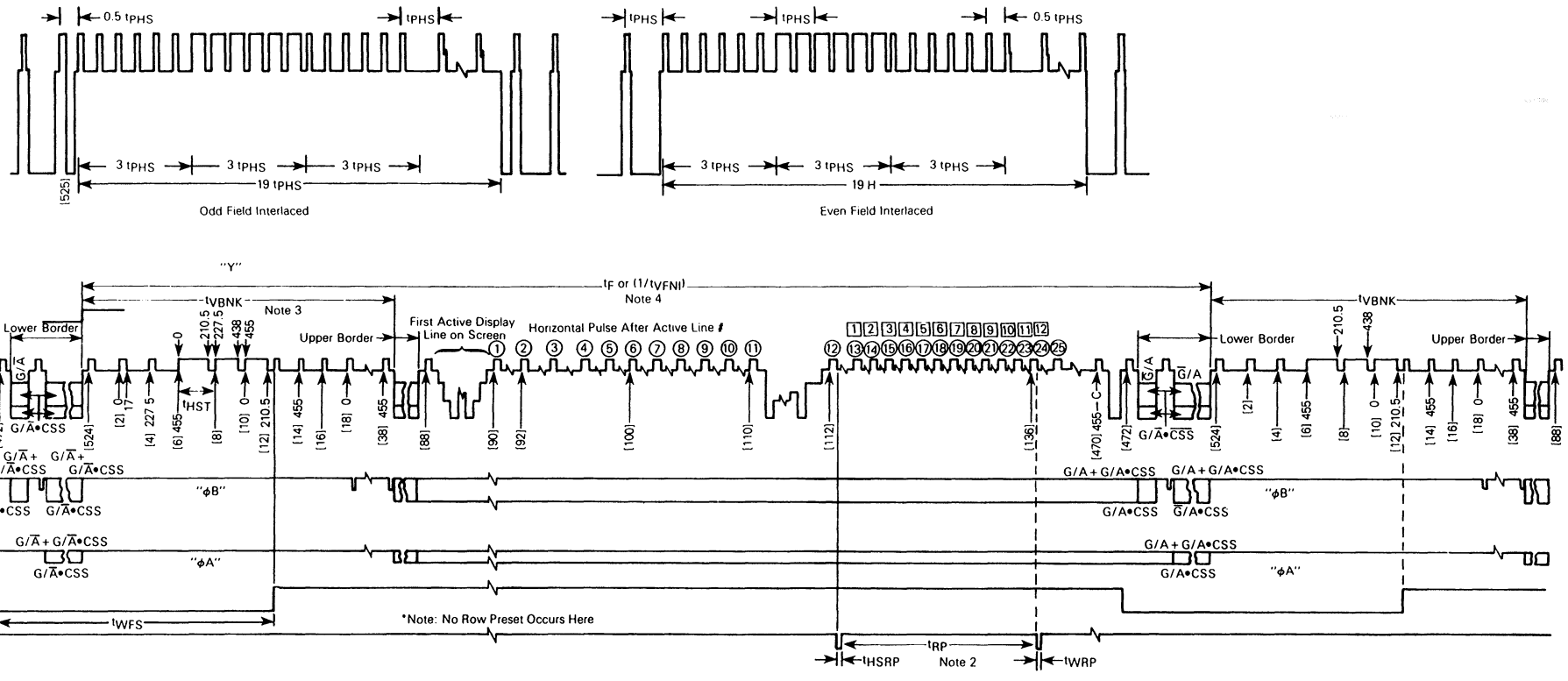

NOTES: 1 [ ] # of 31.468 kHz clocks
(1/31.468 kHz) = 31.7783 μs
Non-Parentheses = # of 3.58 MHz Clocks
1/3.58 MHz = 279.366 ns
Time marks 455 and 0 are the same points in time.

Example Timing Calculations:
t_{HST} = (227.5-0) × 279.366 ns = 63.5μs
= (455-227.5) × 279.366 ns = 63.5 μs
t_{WHS} = (455-438) × 279.366 ns = 4.75 μs
Lower Border = (524-472) × 31.7783 μs-t_{HBNK}
= 1.6525 ms-11.6 ns = 1.64 ms

Upper Border = (88 – 38) × 31.7783 μs – t_{HBNK} =
= 1.5889 μs-11.6 μs = 1.58 ms

2. t_{RP} = 12 horizontal scan lines.
3. t_{VBNK} = 20•t_{PHS} = 20•(227.5•1/f)
4. t_F = 262•t_{PHS} = 262•(227.5•1/f) for Non-Interlace.
t_F = 262.5•T_{PHS} = 262.5•(227.5•1/f) for Interlace.

*t_{HBNK} could actually be considered as part of the border – especially for purposes of writing to the screen. The same holds true for the upper border.

DISPLAY MODES

There are two major display modes in the VDG. Major mode 1 contains four alphanumeric and two limited graphic modes. Major mode 2 contains eight graphic modes. Of these, four are full color graphic and four restricted color graphic modes. The mode selection for the VDG is summarized in Table 2. The mnemonics of these fourteen modes are explained in the following sections.

In major mode 1 the display window is divided into 32 columns by 16 character element rows thus requiring 512 bytes of memory. Each character element is 8 half periods by 12 scan lines in size as shown in Figure 19. The area outside the display window is black.

The VDG has a built-in character generator ROM containing the 64 ASCII characters in a 5 x 7 format (see Figure 20).

The 5 x 7 character font is positioned two columns to the right and three rows down within the 8 x 12 character element. Six bits of the 8-bit data word are typically used for the internal ASCII character generator. The remaining two bits may be used to implement inverse video, color switching, or external character generator ROM selection on a character-by-character basis. For those who wish to display lower case letters, special characters, or even limited-graphics, an external ROM may be used. If such external ROM is used, all of the 8 x 12 picture elements, or pixels, in the character element can be utilized. Characters may be either green on a dark green background or orange on a dark orange background, depending on the state of the CSS pin. The invert pin can be used to display dark characters on a bright background.

TABLE 2 — SUMMARY OF MAJOR MODES

Major Mode 1 — Alpha Modes

Title	Memory	Display Elements	Colors	Title	Memory	Display Elements	Colors
Alphanumerics (Internal)	512 x 8	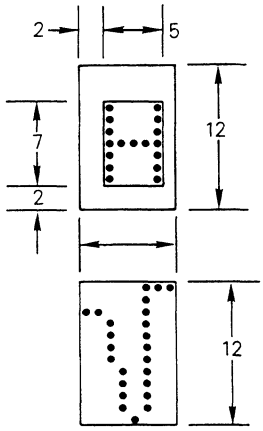	2	Semigraphic 4	512 x 8	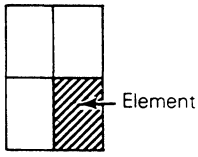	8
Alphanumerics (External)	512 x 8		2	Semigraphic 6	512 x 8	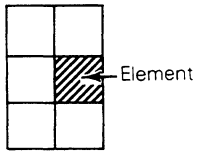	4

Major Mode 2 — Graphics Modes

Title	Memory	Colors	Comments
64 x 64 Color Graphic	1 k x 8	4	Matrix 64 x 64 Elements
128 x 64 Graphics*	1 k x 8	2	Matrix 128 Elements Wide by
128 x 64 Color Graphic	2 k x 8	4	64 Elements High
128 x 96 Graphics*	1.5 k x 8	2	Matrix 128 Elements Wide by
128 x 96 Color Graphic	3 k x 8	4	96 Elements High
128 x 192 Graphics*	3 k x 8	2	Matrix 128 Elements Wide by
128 x 192 Color Graphic	6 k x 8	4	192 Elements High
256 x 192 Graphics	6 k x 8	2	Matrix 256 Elements Wide by 192 Elements High

*Graphics mode turns on or off each element. The color may be one of two.

TABLE 3 — DETAILED DESCRIPTION OF VDG MODES

VDG Pins									Color			TV Screen		VDG Data Bus	Comments
MS	G/A	S/A	EXT/INT	GM2	GM1	GM0	CSS	INV	Character Color	Background	Border	Display Mode	Detail		
1	0	0	0	X	X	X	0 1	0 1 0 1	Green Black Orange Black	Black Green Black Orange	Black Black	32 Characters per row 16 Characters in rows	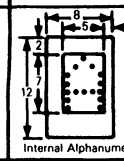 Internal Alphanumerics		The ALPHANUMERIC INTERNAL mode uses an internal character generator (which contains the following five dot by seven dot characters: ,@ABCDEFGHIJKLMNOPQRSTUVWXYZ [\]↑← SP !"#$%&'()*+,-./0123456789:;<=>?. The six bit ASCII code leaves two bits free and these may be externally connected to the mode pins (G/A, S/A, EXT/INT, GM2, GM1, GM0, CSS or INV).
1	0	0	1	X	X	X	0 1	0 1 0 1	Green Black Orange Black	Black Green Black Orange	Black Black	32 Characters per row 16 Characters in rows	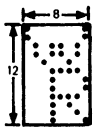	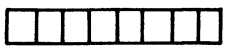 One Row of Custom Characters	The ALPHANUMERIC EXTERNAL mode uses an external character generator as well as a row counter. Thus, custom character fonts or graphic symbol sets with up to 256 different 8 x 12 dot "characters" may be displayed.
1	0	1	0	X	X	X	X	X	Lx C2 C1 C0 Color 0 X X X Black 1 0 0 0 Green 1 0 0 1 Yellow 1 0 1 0 Blue 1 0 1 1 Red 1 1 0 0 Buff 1 1 0 1 Cyan 1 1 1 0 Magenta 1 1 1 1 Orange	Black	64 Display elements per row 32 Display elements in rows	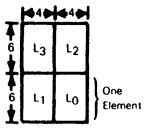	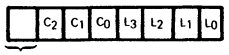	The SEMIGRAPHICS FOUR mode uses an internal "course graphics" generator in which a rectangle (eight dots by twelve dots) is divided into four equal parts. The luminance of each part is determined by a corresponding bit on the VDG data bus. The color of illuminated parts is determined by three bits.
1	0	1	1	X	X	X	0 1	X	Lx C1 C0 Color 0 X X Black 1 0 0 Green 1 0 1 Yellow 1 1 0 Blue 1 1 1 Red 0 X X Black 1 0 0 Buff 1 0 1 Cyan 1 1 0 Magenta 1 1 1 Orange	Black	64 Display elements per row 48 Display elements in rows	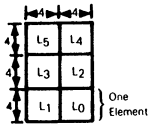	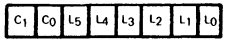	The SEMIGRAPHIC SIX mode is similar to the SEMIGRAPHIC FOUR mode with the following differences. The eight dot by twelve dot rectangle is divided into six equal parts. Color is determined by the two remaining bits.
1	1	X	X	0	0	0	0 1	X	C1 C0 Color 0 0 Green 0 1 Yellow 1 0 Blue 1 1 Red 0 0 Buff 0 1 Cyan 1 0 Magenta 1 1 Orange	Green Buff	64 Display elements per row 64 Display elements	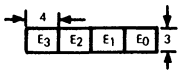	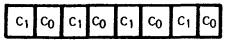	The COLOR GRAPHICS ONE mode uses a maximum of 1024 bytes of display RAM in which one pair of bits specifies one picture element.
1	1	X	X	0	0	1	0 1	X	Lx 0 1 0 1 Color Black Green Black Buff	Green Buff	128 Display elements per row 64 Display elements in rows	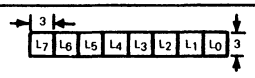	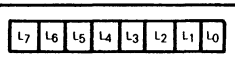	The RESOLUTION GRAPHICS ONE mode uses a maximum of 1024 bytes of display RAM in which one bit specifies one picture element.
1	1	X	X	0	1	0	0 1	X	Same color as Color Graphics One	Green Buff	128 Display elements per row 64 Display elements in rows	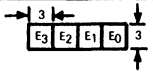	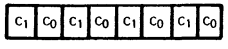	The COLOR GRAPHICS TWO mode uses a maximum of 2048 bytes of display RAM in which one pair of bits specifies one picture element.
1	1	X	X	0	1	1	0 1	X	Same color as Resolution Graphics One	Green Buff	128 Display elements per row 96 Display elements in rows	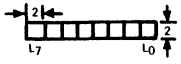	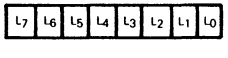	The RESOLUTION GRAPHICS TWO mode uses a maximum of 1536 bytes of display RAM in which one bit specifies one picture element.
1	1	X	X	1	0	0	0 1	X	Same color as Color Graphics One	Green Buff	128 Display elements per row 96 Display elements in rows	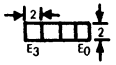	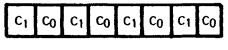	The COLOR GRAPHICS THREE mode uses a maximum of 3072 bytes of display RAM in which one pair of bytes specifies one picture element.
1	1	X	X	1	0	1	0 1	X	Same color as Resolution Graphics One	Green Buff	128 Display elements per row 192 Display elements in rows	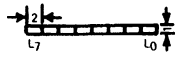	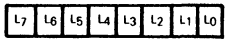	The RESOLUTION GRAPHICS THREE mode uses a maximum of 3072 bytes of display RAM in which one bit specifies one picture element.
1	1	X	X	1	1	0	0 1	X	Same color as Color Graphics One	Green Buff	128 Display elements per row 192 Display Elements in rows	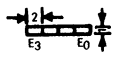	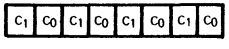	The COLOR GRAPHICS SIX mode uses a maximum of 6144 bytes of display RAM in which one pair of bits specifies one picture element.
1	1	X	X	1	1	1	0 1	X	Same color as Resolution Graphics One	Green Buff	256 Display elements per row 192 Display elements in rows	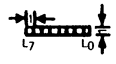	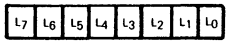	The RESOLUTION GRAPHICS SIX mode uses a maximum of 6144 bytes of display RAM in which one bit specifies one picture element.

FIGURE 19 — ALPHANUMERIC MODE (INTERNAL)

512 Characters (32 × 16)
Typical Character

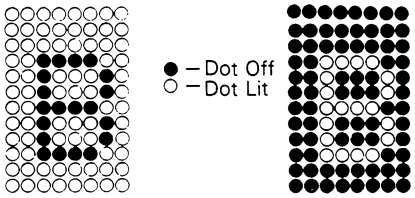

Inverted
Black Character
Orange or Green
Background (Selectable)

Normal
Black Background
Orange or Green
Character (Selectable)

Character Source:
Internal — 6 Bit ASCII Generator ROM On Chip or User Definable
External — Users ROM

FIGURE 20 — AVAILABLE ALPHANUMERICS

MD4 = INV = D4
MD7 = AS = D7

O = Inverted Character — Illuminated Background, Dark Character

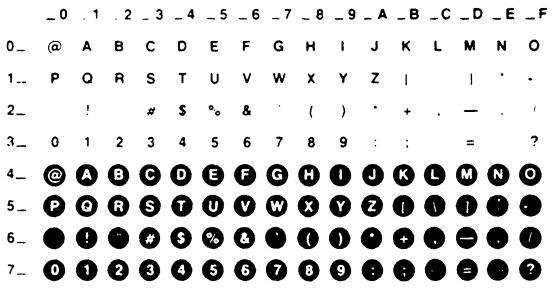

The two limited graphic modes are Semigraphics 4 and Semigraphics 6. In Semigraphics 4, the 8 × 12 dot character block is divided into four pixels (each pixel is four half-clocks by six scan lines). The four low-order bits (DD0-DD3) of each incoming byte of data select one of sixteen possible illumination patterns while the next three bits (DD4-DD6) determine the color of the illuminated elements. The most significant bit is unused. Figure 21 shows the color and pattern selections. In Semigraphics 6 the 8 × 12 dot character block is divided into six pixels, each four half-clocks by four scan lines. The six low-order bits of each byte of incoming data select one of 64 possible illumination patterns while the CSS input and the high-order data bits (DD6-DD7) determine the color of the illuminated elements.

The display window in major mode 2 (full graphics) has a less rigorous format than in major mode 1. The display elements vary from one scan line to three scan lines in height. The length of the display element is either eight or sixteen half-periods wide. Each display element is divided into four or eight pixels. The former corresponds to a full color mode while the latter a restricted color mode, like the semigraphics modes, represents illumination data. When it is high the pixel is illuminated with the color chosen by the color set select (CSS) pin. When it is low the pixel is black. In the full color modes, pairs of data bits choose one of four colors in one of two color sets defined by the CSS pin. Depending on the state of the CSS pin, the area outside the display window is either green or buff. The display formats and color selection for this major mode are summarized in Figure 19.

THE 64 × 64 COLOR GRAPHICS ONE (CG1) MODE — The 64 × 64 color graphics mode generates a display matrix of 64 elements wide by 64 elements high. Each element may be one of four colors. A 1k × 8 display memory is required. The display RAM is accessed 16 times per horizontal line. Each pixel equals four half-clocks by three scan lines.

THE 128 × 64 RESOLUTION GRAPHICS ONE (RG1) MODE — The 128 × 64 graphics mode generates a matrix 128 elements wide by 64 elements high. Each element may be either ON or OFF. However, the entire display may be one of two colors, selected by using the color set select pin. A 1k × 8 display memory is required. The display RAM is accessed 16 times per horizontal line. Each pixel equals two half-clocks by three scan lines.

THE 128 × 64 COLOR GRAPHICS TWO (CG2) MODE — The 128 × 64 color graphics mode generates a display matrix 128 elements wide by 64 elements high. Each element may be one of four colors. A 2k × 8 display memory is required. The display RAM is accessed 32 times per horizontal line. Each pixel equals two half-clocks by three scan lines.

THE 128 × 96 RESOLUTION GRAPHICS TWO (RG2) MODE — The 128 × 96 graphics mode generates a display matrix 128 elements wide by 96 elements high. Each element may be either ON or OFF. However, the entire display may be one of two colors selected by using the color set select pin. A 1.5k × 8 display memory is required. The display RAM is accessed 16 times per horizontal line. Each pixel equals two half-clocks by two scan lines.

THE 128 × 96 COLOR GRAPHICS THREE (CG3) MODE — The 128 × 96 color graphics mode generates a display 128 elements wide by 96 elements high. Each element may be one of four colors. A 3k × 8 display memory is required. The display RAM is accessed 32 times per horizontal line. Each pixel equals two half-clocks by two scan lines.

THE 128 × 192 RESOLUTION GRAPHICS THREE (RG3) MODE — The 128 × 192 graphics mode generates a display matrix 128 elements wide by 192 elements high. Each element may be either ON or OFF, but the ON element may be one of two colors selected with the color set select pin. A 3k × 8 display memory is required. The display RAM is accessed 16 times per horizontal line. Each pixel equals two half-clocks by one scan line.

THE 128 × 192 COLOR GRAPHICS SIX (CG6) MODE — The 128 × 192 color graphics mode generates a display 128 elements wide by 192 elements high. Each element may be one of four colors. A 6k × 8 display memory is required. The display RAM is accessed 32 times per horizontal line. Each pixel equals two half-clocks by one scan line.

THE 256 × 192 RESOLUTION GRAPHICS SIX (RG6) MODE — The 256 × 193 graphics mode generates a display 256 elements wide by 192 elements high. Each element may be either ON or OFF, but the ON element may be one of two colors selected with the color set select pin. A 6k × 8 display memory is required. The display RAM is accessed 32 times per horizontal line. Each pixel equals one half-clock by one scan line.

FIGURE 21 — SEMIGRAPHIC MODE ENCODING

(a) Data and Display Formats

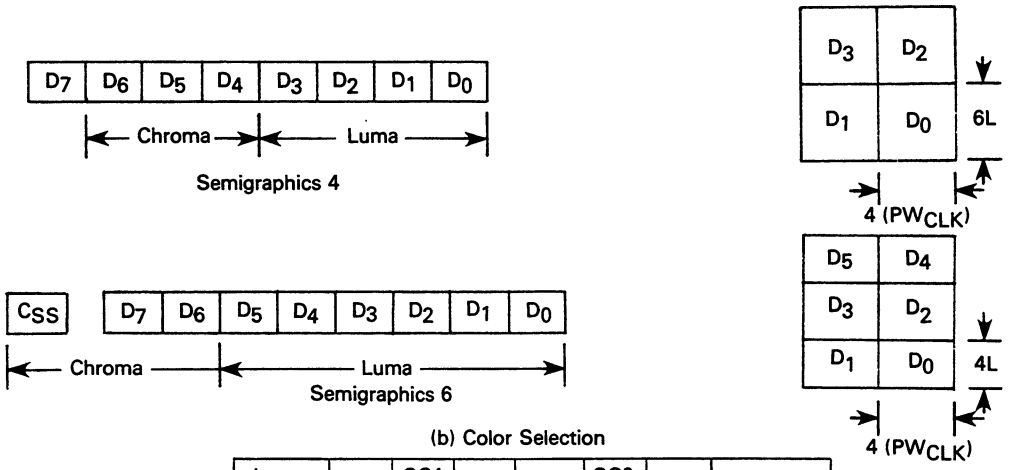

(b) Color Selection

Luma DN	SG4 D6	SG4 D5	SG4 D4	CSS	SG6 D7	SG6 D6	Color
0	X	X	X	X	X	X	Black
1	0	0	0	0	0	0	Green
1	0	0	1	0	0	1	Yellow
1	0	1	0	0	1	0	Blue
1	0	1	1	0	1	1	Red
1	1	0	0	1	0	0	Buff
1	1	0	1	1	0	1	Cyan
1	1	1	0	1	1	0	Magenta
1	1	1	1	1	1	1	Orange

FIGURE 22 — GRAPHIC MODE ENCODING

(a) Data Format

(b) Display Format

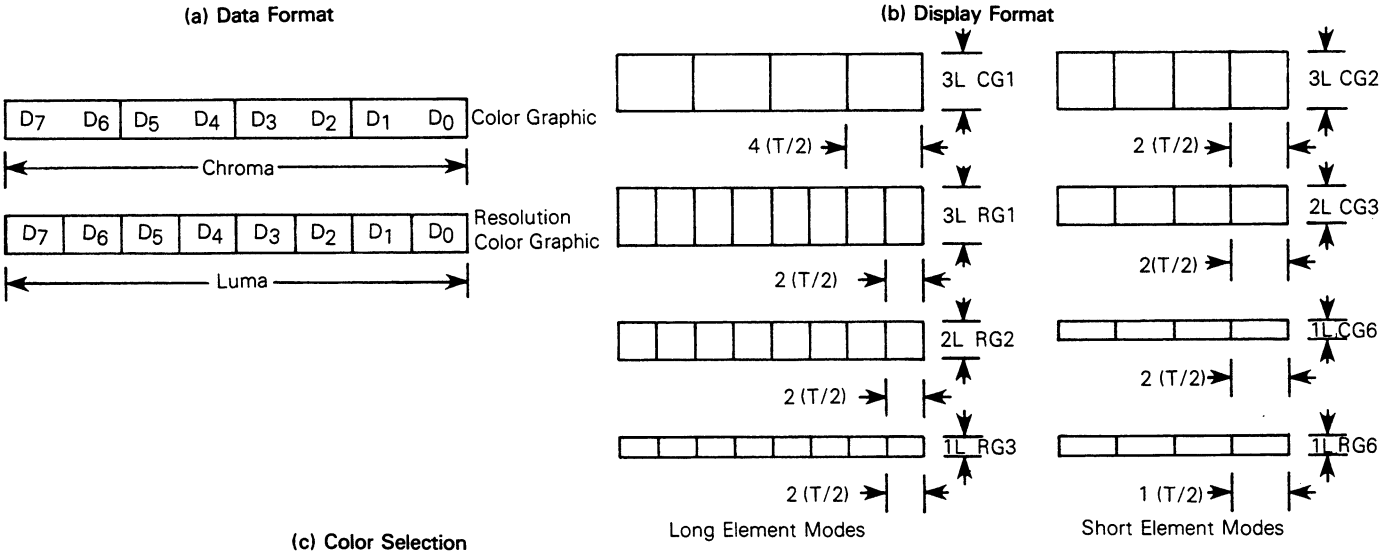

(c) Color Selection

CSS	Border	Resolution Color Mode DN	Resolution Color Mode Color	Color Mode DN+1	Color Mode DN	Color Mode Color
0	Green	0	Black	0	0	Green
0	Green	1	Green	0	1	Yellow
0	Green	1	Green	1	0	Blue
0	Green	1	Green	1	1	Red
1	Buff	0	Black	0	0	Buff
1	Buff	1	Buff	0	1	Cyan
1	Buff	1	Buff	1	0	Magenta
1	Buff	1	Buff	1	1	Orange

TYPICAL SYSTEM IMPLEMENTATION

The block diagram in Figure 23 shows how the VDG is related to other functional blocks in a typical system (non-6883). A negative row preset signal ($\overline{RP}$) generated by the VDG initializes the row scan counter for the external character generator once every twelve scan lines, while the negative horizontal sync ($\overline{HS}$) acts as clock to this counter. The negative field sync ($\overline{FS}$) generates an interrupt to the MPU, signifying that the display memory can be updated without interference with the VDG display function. This signal must not be confused with the system vertical sync signal. Field sync is activated by the end of the vertical display window and deactivated by the trailing edge of vertical sync. This gives the MPU a total of thirty-two scan lines or 2.03 ms to update the display memory. The MPU acknowledges the interrupt request from the VDG by bringing the negative memory select input (MS) to the VDG low. This puts the address bus output from the VDG into high-impedance state, thus relinquishing bus control to the MPU. The timing relationship of horizontal sync, row preset, and field sync are shown in Figures 7, 8, and 13.

The display memory is an element-by-element map of the display window on the screen. The VDG addresses the display memory storage locations in succession and translates their contents into luminance and chrominance levels. The frequency of address update is dependent on the length of the display element. Recall that display elements in major mode 1 are four periods and major mode 2 are either four or eight periods of the master clock. Data from the display memory is latched on every address transition. Hence, the data for the first display element must be stable four or eight periods before the horizontal display window depending on the display mode selected. This timing requirement is illustrated in Figure 6.

Examination of Figures 21 and 22 reveal that all display elements within major mode 1 are similar while those within major mode 2 are largely dissimilar. Therefore, mode switching between alphanumeric modes and semigraphic modes can be carried out freely. Care must be taken, however, when performing mode switching in major mode 2. The only compatible modes are between CG1 and RG1, and between CG6 and RG6. Minor mode switching within the same major mode in a given element row can be achieved as long as it is between compatible modes. It should be quite apparent that major mode switching on an element-by-element basis is impractical. It can be achieved, however, at the expense of added component count. The element formats in the VDG lend themselves to major mode switching between element rows. The presence of row preset in major mode 1 serves as a flag for the beginning of a new element row. Detection of this signal can initiate a major mode switch from 1 to 2.

Display memory size is a function of the display density. Quite often a graphic display contains shapes that are several times larger than that of the display elements in the VDG. This is particularly true of certain video games. Much of the display consists of a fixed background. The vertical size of a display element can be doubled or quadrupled by simply ignoring the lowest order or the first two low order vertical addresses, respectively, from the VDG. Reduction of address lines naturally leads to reduction in memory size. Another method of memory reduction is to store objects or object fragments in ROM and store their display addresses in the RAM portion of display memory. Here, the larger the object fragment, the greater the memory saving.

ASSOCIATED DEVICES

MC6883 — SYNCHRONOUS ADDRESS MULTIPLEXER (SAM)

This device, a linear bipolar companion to the MC6800 or MC6809E (external clock inputs), is primarily a VDG transparent-access controller. It allows the microprocessor to load and store to VDG display memory ("screen RAM") without waiting for a blank screen interval. Figure 1 shows a typical system using the SAM and the MC6809E. The inherent interleaved direct memory accesses (IDMA) which occur, continuously keep the VDG updated with the proper data (independently of mode), as well as keeping the dynamic memory (used as system memory with the MC6833) refreshed. This is done through a IDMA process as well, during the time the VDG does not need display data (horizontal and vertical sync times).

In addition to being a transparent memory access and dynamic memory controller, the SAM also functions as an external clock generator for the MC6800/6809E (slight additional circuitry is required for the MC6800).

MC1372/1373 CHROMA/RF MODULATOR

The MC1372 is a chrominance phase-shift modulator with built in RF up-converter. The part may be used without the RF modulator for chroma only, or the RF oscillator may be defeated and composite chrominance and luminance can be obtained.

The MC1373 is an RF modulator only (similar to the second half of the MC1372) and can be used to up-modulate separate luma and chroma signals at the receiver for high quality video reception.

FIGURE 23 — TYPICAL VDG SYSTEM

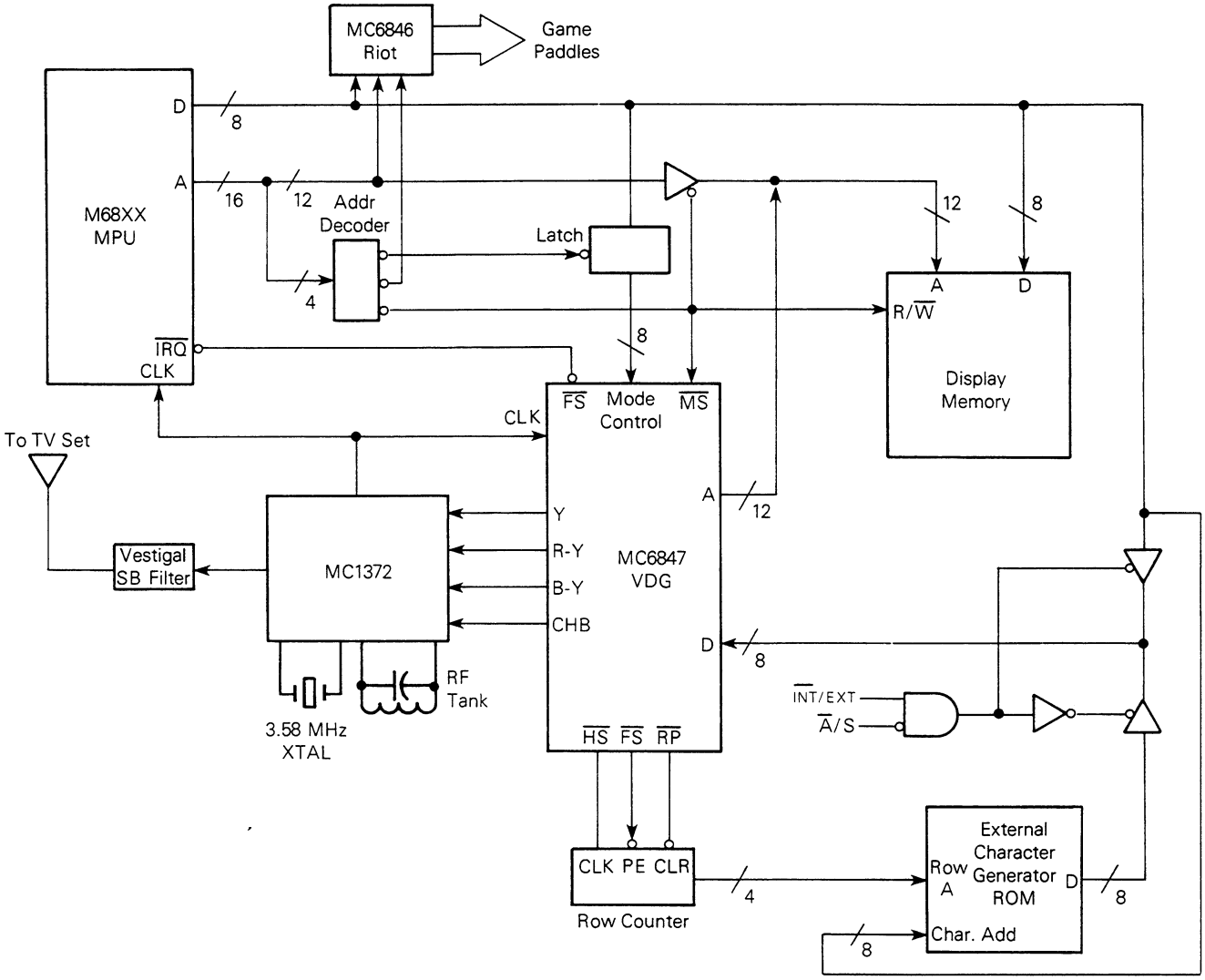

APPENDIX A
CUSTOM MC6847 ORDERING INFORMATION

The following information is required when ordering a custom MCU. This information may be transmitted to Motorola in the following media:

PROM(s) MCM2716s or MCM2708s

MDOS disk file

To initiate a ROM pattern for the MCU it is necessary to first contact your local field service office, local sales person, or your local Motorola representative.

PROMs — The MCM2708 or MCM2716 type PROMs, programmed with the customer program (positive logic sense for address and data), may be submitted for pattern generation. The PROMs must be clearly marked to indicate which PROM corresponds to which address space (000-3FF HEX), (400-7FF) or (000-7FF). See Figure 24 for recommended marking procedure.

After the PROM(s) are marked they should be placed in conductive IC carriers and securely packed. Do not use styrofoam.

FIGURE 24 — PROM MARKING

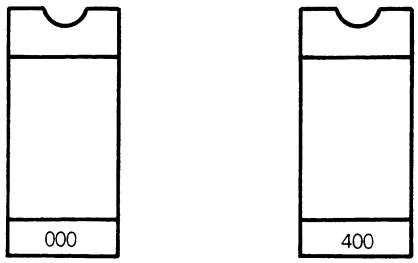

xxx = Customer ID

VERIFICATION MEDIA

All original pattern media (PROMs or Floppy Disk) are filed for contractual purposes and are not returned. A computer listing of the ROM code will be generated and returned along with a listing verification form. The listing should be thoroughly checked and the verification form completed, signed, and returned to Motorola. The signed verification form constitutes the contractual agreement for creation of the customer mask. If desired, Motorola will program a blank

2716 EPROM (supplied by the customer) from the data file used to create the custom mask to aid in the verification process.

ROM VERIFICATION UNITS

Ten MC6847s containing the customer's ROM pattern will be sent for program verification. These units will have been made using the custom mask but are for the purpose of ROM verification only. For expediency they are usually unmarked, packaged in ceramic, and tested only at room temperature and 5 volts. These RVUs are included in the mask charge and are not production parts.

FLEXIBLE DISKS

The disk media submitted must be single-sided, single-density, 8-inch, MDOS compatible floppies. The customer must write the binary file name and company name on the disk with a felt-tip pen. The floppies are not to be returned by Motorola as they are used for archival storage. The minimum MDOS system files must be on the disk as well as the absolute binary object file (filename.LO type of file). An object file made from a memory dump using the ROLLOUT command is also admissable. Consider submitting a source listing as well as the following files: filename.LX (EXORciser® loadable format) and filename.SA (ASCII Source Code). These files will of course be kept confidential and are used 1) to speed up the process in house if any problems arise, and 2) to speed up our customer to factory interface if a user finds any software errors and needs assistance quickly from the factory representatives.

MDOS is Motorola's Disk Operating System available on development systems such as EXORcisers, or EXORsets, etc.

FIGURE A-2

Customer Name _____

Address _____

City _____

Phone (_____)_____State _____Zip _____

Contact Ms/Mr _____

Customer Part Number _____

Pattern Media
2708 PROM
2716 PROM

MDOS Disk
(Note 2) _____

Other (NOTE: Other media requires prior factory approval)

Signature _____

Title _____

® Registered trademark of Motorola Inc.

EXORset is a trademark of Motorola Inc.

OUTLINE DIMENSIONS

P SUFFIX
PLASTIC PACKAGE
CASE 711-03

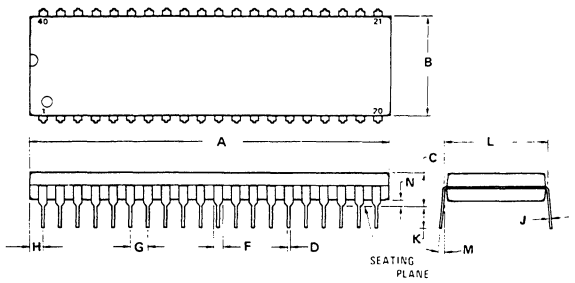

DIM	MILLIMETERS MIN	MILLIMETERS MAX	INCHES MIN	INCHES MAX
A	51.69	52.45	2.035	2.065
B	13.72	14.22	0.540	0.560
C	3.94	5.08	0.155	0.200
D	0.36	0.56	0.014	0.022
F	1.02	1.52	0.040	0.060
G	2.54 BSC		0.100 BSC	
H	1.65	2.16	0.065	0.085
J	0.20	0.38	0.008	0.015
K	2.92	3.43	0.115	0.135
L	15.24 BSC		0.600 BSC	
M	0°	15°	0°	15°
N	0.51	1.02	0.020	0.040

NOTES:
1. POSITIONAL TOLERANCE OF LEADS (D), SHALL BE WITHIN 0.25 mm (0.010) AT MAXIMUM MATERIAL CONDITION, IN RELATION TO SEATING PLANE AND EACH OTHER.
2. DIMENSION L TO CENTER OF LEADS WHEN FORMED PARALLEL.
3. DIMENSION B DOES NOT INCLUDE MOLD FLASH.

L SUFFIX
CERAMIC PACKAGE
CASE 715-04

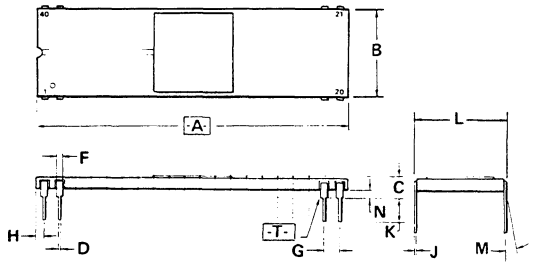

DIM	MILLIMETERS MIN	MILLIMETERS MAX	INCHES MIN	INCHES MAX
A	50.29	51.31	1.980	2.020
B	14.63	15.49	0.576	0.610
C	3.05	4.32	0.120	0.170
D	0.38	0.53	0.015	0.021
F	0.76	1.40	0.030	0.055
G	254 BSC		0.100 BSC	
J	0.20	0.33	0.008	0.013
K	2.54	4.19	0.100	0.165
L	14.99	15.65	0.590	0.616
M	–	10°	–	10°
N	1.02	1.52	0.040	0.060

NOTES:
1. DIMENSION -A- IS DATUM.
2. POSITIONAL TOLERANCE FOR LEADS:

   ⌖ 0.25 (0.010) Ⓜ T A Ⓜ

3. -T- IS SEATING PLANE.
4. DIMENSION "L" TO CENTER OF LEADS WHEN FORMED PARALLEL.
5. DIMENSIONING AND TOLERANCING PER ANSI Y14.5, 1973.

OUTLINE DIMENSIONS (CONTINUED)

S SUFFIX
CERDIP PACKAGE
CASE 734-03

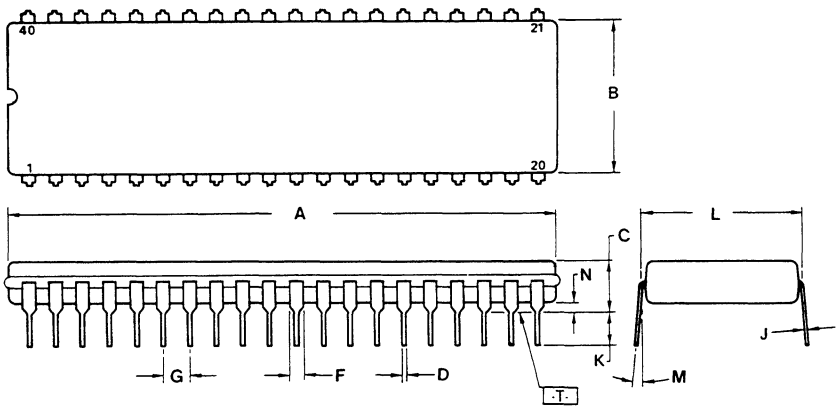

DIM	MILLIMETERS MIN	MILLIMETERS MAX	INCHES MIN	INCHES MAX
A	51.31	53.24	2.020	2.096
B	12.70	15.49	0.500	0.610
C	4.06	5.84	0.160	0.230
D	0.38	0.56	0.015	0.022
F	1.27	1.65	0.050	0.065
G	2.54 BSC		0.100 BSC	
J	0.20	0.30	0.008	0.012
K	3.18	4.06	0.125	0.160
L	15.24 BSC		0.600 BSC	
M	5°	15°	5°	15°
N	0.51	1.27	0.020	0.050

NOTES:
1. DIMENSION-A-IS DATUM.
2. POSITIONAL TOLERANCE FOR LEADS:
   ⌖ | ⌀ 0.25 (0.010) Ⓜ | T | A Ⓜ
3. -T- IS SEATING PLANE.
4. DIMENSION L TO CENTER OF LEADS WHEN FORMED PARALLEL.
5. DIMENSION A AND B INCLUDES MENISCUS.

This page intentionally left blank.

Motorola reserves the right to make changes without further notice to any products herein. Motorola makes no warranty, representation or guarantee regarding the suitability of its products for any particular purpose, nor does Motorola assume any liability arising out of the application or use of any product or circuit, and specifically disclaims any and all liability, including without limitation consequential or incidental damages. "Typical" parameters can and do vary in different applications. All operating parameters, including "Typicals" must be validated for each customer application by customer's technical experts. Motorola does not convey any license under its patent rights nor the rights of others. Motorola products are not designed, intended, or authorized for use as components in systems intended for surgical implant into the body, or other applications intended to support or sustain life, or for any other application in which the failure of the Motorola product could create a situation where personal injury or death may occur. Should Buyer purchase or use Motorola products for any such unintended or unauthorized application, Buyer shall indemnify and hold Motorola and its officers, employees, subsidiaries, affiliates, and distributors harmless against all claims, costs, damages, and expenses, and reasonable attorney fees arising out of, directly or indirectly, any claim of personal injury or death associated with such unintended or unauthorized use, even if such claim alleges that Motorola was negligent regarding the design or manufacture of the part. Motorola and Ⓜ are registered trademarks of Motorola, Inc. Motorola, Inc. is an Equal Opportunity/Affirmative Action Employer.

Literature Distribution Centers:
USA: Motorola Literature Distribution; P.O. Box 20912; Phoenix, Arizona 85036.
EUROPE: Motorola Ltd.; European Literature Centre; 88 Tanners Drive, Blakelands, Milton Keynes, MK14 5BP, England.
JAPAN: Nippon Motorola Ltd.; 4-32-1, Nishi-Gotanda, Shinagawa-ku, Tokyo 141, Japan.
ASIA PACIFIC: Motorola Semiconductors H.K. Ltd.; Silicon Harbour Center, No. 2 Dai King Street, Tai Po Industrial Estate, Tai Po, N.T., Hong Kong.



MOTOROLA

A11724-5 PRINTED IN USA(1994) MPS/POD

MC6847/D

