MOTOROLA

SN74LS783/ MC6883 SN74LS785

SYNCHRONOUS ADDRESS MULTIPLEXER

LOW POWER SCHOTTKY

SYNCHRONOUS ADDRESS MULTIPLEXER

The SN74LS783/MC6883 and SN74LS785 bring together the MC6809E (MPU), the MC6847 (Color Video Display Generator) and dynamic RAM to form a highly effective, compact and cost effective computer and display system.

The SN74LS783/MC6883 is designed to support 4K x 1, 16K x 1 and 64K x 1 (128 column refresh) dynamic RAMs. The SN74LS785 has been modified to support the above listed products as well as 16K x 4 and 64K x 1 (256 column refresh) dynamic RAMs. A further enhancement allows the LS785 to support low power dynamic ROMs (such as MCM68364) without additional logic.

- MC6809E, MC6800, MC6801E, MC68000 and MC6847 (VDG) Compatible
- Transparent MPU/VDG/Refresh
- RAM size — 4K, 8K, 16K, 32K or 64K Bytes (Dynamic or Static)
- Addressing Range — 96K Bytes
- Single Crystal Provides All Timing
- Register Programmable:
  - VDG Addressing Modes
  - VDG Offset (0 to 64K)
  - RAM Size
  - Page Switch
  - MPU Rate (Crystal ÷ 16 or ÷ 8)
  - MPU Rate (Address Dependent or Independent)
- System "Device Selects" Decoded 'On Chip'
- Timing is Optimized for Standard Dynamic RAMs
- +5.0 V Only Operation
- Easy Synchronization of Multiple SAM Systems
- DMA Mode

TYPICAL SYSTEM BLOCK DIAGRAM

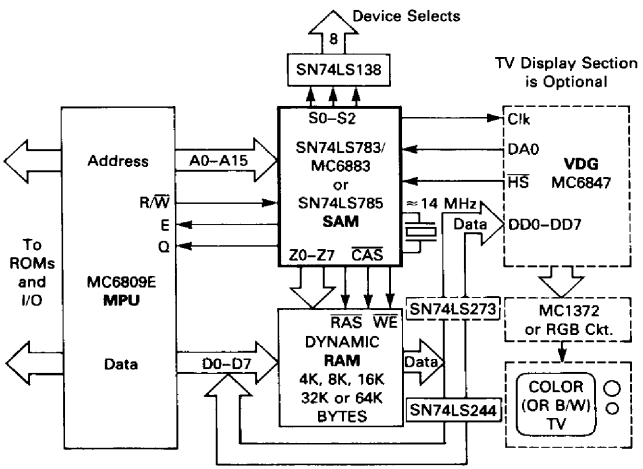

PIN ASSIGNMENT

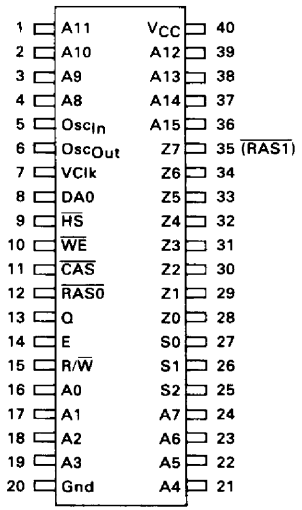

5

This Material Copyrighted By Its Respective Manufacturer

MAXIMUM RATINGS (T_A = 25°C unless otherwise noted.)

Rating	Symbol	Value	Unit
Power Supply Voltage	V_{CC}	−0.5 to +7.0	Vdc
Input Voltage (Except Osc_{In})	V_I	−0.5 to 10	Vdc
Input Current (Except Osc_{In})	I_I	−30 to +5.0	mA
Output Voltage	V_O	−0.5 to +7.0	Vdc
Operating Ambient Temperature Range	T_A	0 to +70	°C
Storage Temperature Range	T_{stg}	−65 to +150	°C
Input Voltage Osc_{In}	$V_{IOsc_{In}}$	−0.5 to V_{CC}	Vdc
Input Current Osc_{In}	$I_{IOsc_{In}}$	−0.5 to +5.0	mA

GUARANTEED OPERATING RANGES

Parameter	Symbol	Min	Typ	Max	Unit
Supply Voltage	V_{CC}	4.75	5.0	5.25	V
Operating Ambient Temperature Range	T_A	0	25	75	°C
Output Current High	I_{OH}				mA
$\overline{RAS0}$, $\overline{RAS1}$, $\overline{CAS}$, $\overline{WE}$		—	—	−1.0	
All Other Outputs		—	—	−0.2	
Output Current Low	I_{OL}				mA
$\overline{RAS0}$, $\overline{RAS1}$, $\overline{CAS}$, $\overline{WE}$		—	—	8.0	
VClk		—	—	0.8	
All Other Outputs		—	—	4.0	

DC CHARACTERISTICS (Unless otherwise noted specifications apply over recommended power supply and temperature ranges.)

Characteristic	Symbol	Min	Typ	Max	Units
Input Voltage — High Logic State	V_{IH}	2.0	—	—	V
Input Voltage — Low Logic State	V_{IL}	—	—	0.8	V
Input Clamp Voltage (V_{CC} = Min, I_{in} = −18 mA) All Inputs Except Osc_{In}	V_{IK}	—	—	−1.5	V
Input Current — High Logic State at Max Input Voltage	I_I				μA
(V_{CC} = Max, V_{in} = 5.25 V) VClk Input		—	—	200	
(V_{CC} = Max, V_{in} = 5.25 V) DA0 Input		—	—	100	
(V_{CC} = Max, V_{in} = 5.25 V Osc_{In} = Gnd) Osc_{Out} Input		—	—	250	
(V_{CC} = Max, V_{in} = 7.0 V) All Other Inputs Except Osc_{In}		—	—	100	
Input Current High Logic State All Inputs Except VClk, (V_{CC} = Max, V_{in} = 2.7 V) DA0 Osc_{In}, Osc_{Out}	I_{IH}	—	—	20	μA
Input Current — Low Logic State	I_{IL}				mA
(V_{CC} = Max, V_{in} = 0.4 V) DA0 Input		—	—	−1.2	
(V_{CC} = Max, V_{in} = 0.4 V) VClk Input		—	−30	−60	
(V_{CC} = Max, V_{in} = 0.4 V, Osc_{In} = Gnd) Osc_{Out} Input		—	—	−8	
(V_{CC} = Max, V_{in} = 0.4 V) All Other Inputs Except Osc_{In}		—	—	−.4	
Output Voltage — High Logic State					V
(V_{CC} = Min, I_{OH} = −1.0 mA) $\overline{RAS0}$, $\overline{RAS1}$, $\overline{CAS}$, $\overline{WE}$	$V_{OH(C)}$	3.0	—	—	
(V_{CC} = Min, I_{OH} = −0.2 mA) E, Q	$V_{OH(E)}$	V_{CC} − 0.75	—	—	
(V_{CC} = Min, I_{OH} = −0.2 mA) All Other Outputs	V_{OH}	2.7	—	—	
Output Voltage — Low Logic State					V
(V_{CC} = Min, I_{OL} = 8.0 mA) $\overline{RAS0}$, $\overline{RAS1}$, $\overline{CAS}$, $\overline{WE}$	$V_{OL(C)}$	—	—	0.5	
(V_{CC} = Min, I_{OL} = 4.0 mA) E, Q Outputs	$V_{OL(E)}$	—	—	0.5	
(V_{CC} = Min, I_{OL} = 0.8 mA) VClk Output	$V_{OL(V)}$	—	—	0.6	
(V_{CC} = Min, I_{OL} = 4.0 mA) All Other Outputs	V_{OL}	—	—	0.5	
Power Supply Current	I_{CC}	—	180	230	mA
Output Short-Circuit Current	I_{OS}	30	—	225	mA

5

This Material Copyrighted By Its Respective Manufacturer

AC CHARACTERISTICS ($4.75 V \le V_{CC} \le 5.25$ V and $0 \le T_A \le 70°C$, unless otherwise noted).

Characteristic	Symbol	Min	Typ	Max	Units
Propagation Delay Times (See Circuit in Figure 9) Oscillator-In ↘ to Oscillator-Out ↗	$t_{d(OL-OH)}$	—	3.0	—	ns
Oscillator-In ↗ to Oscillator-Out ↘	$t_{d(OH-OL)}$	—	20	—	
(C_L = 195 pF) A0 thru A15 to Z0, Z1, Z2 thru Z7	$t_{d(A-Z)}$	—	28	—	
(C_L = 30 pF) A0 thru A15, R/W to S0, S1, S3	$t_{d(A-S)}$	—	18	—	
(C_L = 95 pF) Oscillator-Out ↘ to $\overline{RAS0}$ ↗	$t_{d(OL-R0H)}$	—	20	—	
(C_L = 95 pF) Oscillator-Out ↘ to $\overline{RAS0}$ ↘	$t_{d(OL-R0L)}$	—	18	—	
(C_L = 95 pF) Oscillator-Out ↘ to $\overline{RAS1}$ ↗	$t_{d(OL-R1H)}$	—	22	—	
(C_L = 95 pF) Oscillator-Out ↘ to $\overline{RAS1}$ ↘	$t_{d(OL-R1L)}$	—	20	—	
(C_L = 195 pF) Oscillator-Out ↘ to $\overline{CAS}$ ↗	$t_{d(OL-CH)}$	—	20	—	
(C_L = 195 pF) Oscillator-Out ↘ to $\overline{CAS}$ ↘	$t_{d(OL-CL)}$	—	20	—	
(C_L = 195 pF) Oscillator-Out ↘ to $\overline{WE}$ ↗	$t_{d(OL-WH)}$	—	22	—	
(C_L = 195 pF) Oscillator-Out ↘ to $\overline{WE}$ ↘	$t_{d(OL-WL)}$	—	40	—	
(C_L = 100 pF) Oscillator-Out ↘ to E ↗	$t_{d(OL-EH)}$	—	55	—	
(C_L = 100 pF) Oscillator-Out ↘ to E ↘	$t_{d(OL-EL)}$	—	25	—	
(C_L = 100 pF) Oscillator-Out ↘ to Q ↗	$t_{d(OL-QH)}$	—	55	—	
(C_L = 100 pF) Oscillator-Out ↘ to Q ↘	$t_{d(OL-QL)}$	—	25	—	
(C_L = 30 pF) Oscillator-Out ↗ to VClk ↗	$t_{d(OH-VH)}$	—	50	—	
(C_L = 30 pF) Oscillator-Out ↗ to VClk ↘	$t_{d(OH-VL)}$	—	65	—	
(C_L = 195 pF) Oscillator-Out ↘ to Row Address	$t_{d(OL-AR)}$	—	36	—	
(C_L = 195 pF) Oscillator-Out ↘ to Column Address	$t_{d(OL-AC)}$	—	33	—	
(C_L = 15 pF) Oscillator-Out ↘ to DA0 ↗ Earliest[1]	$t_{d(OL-DH)}$	—	−15	—	
(C_L = 15 pF) Oscillator-Out ↘ to DA0 ↗ Latest[1]	$t_{d(OL-DH)}$	—	+15	—	
(C_L = 95 pF on $\overline{RAS}$, C_L = 195 pF on $\overline{CAS}$) $\overline{CAS}$ ↘ to $\overline{RAS}$ ↗	$t_{d(CL-RH)}$	—	208	—	
Setup Time for A0 thru A15, R/$\overline{W}$ Rate = ÷16	$t_{su(A)}$	—	28	—	ns
Rate = ÷8		—	28		
Hold Time for A0 thru A15, R/$\overline{W}$ Rate = ÷16	$t_{h(A)}$	—	30	—	ns
Rate = ÷8		—	30	—	
Width of $\overline{HS}$ Low [2]	$t_{WL(HS)}$	2.0	5.0	6.0	μs

Notes: 1. When using the SAM with an MC6847, the rising edge of DA0 is confined within the range shown in the timing diagrams (unless the synchronizing process is incomplete.) The synchronization process requires a maximum of 32 cycles of Osc_{Out} for completion.
2. $t_{WL(HS)}$ wider than 6.0 μs may yield more than 8 sequential refresh addresses.

5

FIGURE 1 — PROPAGATION DELAY TIMES versus LOAD CAPACITANCE

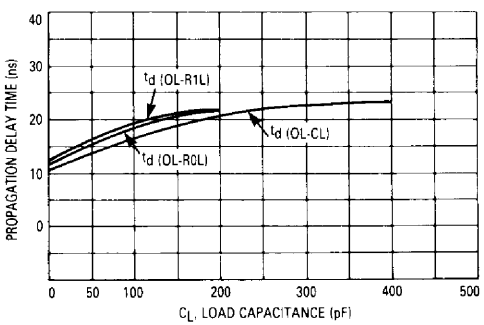

This Material Copyrighted By Its Respective Manufacturer

PIN DESCRIPTION TABLE

		Name	No.	Function
Input Pins	Power	V_{CC}	40	Apply + 5 volts ± 5%. SAM draws less than 230 mA.
		Gnd	20	Return Ground for +5 volts.
	MPU Address and Control	A15	36	Most Significant Bit.
		A14	37	
		A13	38	MPU address bits A0-A15. These 16 signals come directly from the MPU and are used to directly address up to 64K memory locations or to indirectly address up to 96K memory locations. (See pages 17 and 18 for memory maps). Each input is approximately equivalent to one low power Schottky load.
		A12	39	
		A11	1	
		A10	2	
		A9	3	
		A8	4	
		A7	24	
		A6	23	
		A5	22	
		A4	21	
		A3	19	
		A2	18	
		A1	17	
		A0	16	Least Significant Bit.
		R/$\overline{W}$	15	MPU READ or $\overline{WRITE}$. This signal comes directly from the MPU and is used to enable writing to the SAM control register, dynamic RAM (via $\overline{WE}$), and to enable device select #0.
	VDG Control	Osc_{In}	5	Apply 14.31818* MHz crystal and 2.5–30 pF trimmer to ground. See page 12.
		DA0	8	Display Address DA0. The primary function of this pin is to input the least significant bit of a 16-bit video display address. The more significant 15-bits are outputs from an internal 15-bit counter which is clocked by DA0. The secondary function of this pin is to indirectly input the logic level of the VDG "$\overline{FS}$" (field synchronization pulse) for vertical video address updating.
		$\overline{HS}$	9	Horizontal Synchronization. The primary function of this pin is to detect the falling edge of VDG "$\overline{HS}$" pulse in order to initiate eight dynamic RAM refresh cycles. The secondary function is to reset up to 4 least significant bits of the internal video address counter.
		VClk	7	VDG Clock. The primary function of this pin is to **output** a 3.579545 MHz square wave** to the VDG "Clk" pin. The secondary function resets the SAM when this VClk pin is pulled to logic "0" level, acting as an **input**.
Output Pins		Osc_{Out}	6	Apply 1.5 kΩ resistor to 14.31818* MHz crystal and 33 pF capacitor to ground. See page 12.
	Device Selects	S2	25	Most Significant Bit (Device Select Bits). The binary value of S2, S1, S0 selects one of eight "chunks" of MPU address space (numbers 0 through 7). Varying in length, these "chunks" provide efficient memory mapping for ROMs, RAMs, Input/Output devices, and MPU Vectors. (Requires 74LS 138-type demultiplexer).
		S1	26	
		S0	27	Least Significant Bit.
	MPU Clocks	E	14	E (Enable Clock) "E" and "Q" are 90° out of phase and are both used as MPU clocks for the MC6809E. For the MC6800 and MC6801E, only "E" is used. "E" is also used for many MC6800 peripheral chips.
		Q	13	Q (Quadrature Clock).
	RAM Address	Z7†	35	Most Significant Bit
		Z6†	34	First, the least significant address bits from the MPU or "VDG" are presented to Z0–Z5 (4K x 1 RAMs) or Z0–Z6 (16K x 1 RAMs) or Z0–Z7 (64K x 1 RAMs). Next, the most significant address bits from the MPU or "VDG" are presented to Z0–Z5 (4K x 1 RAMs) or Z0–Z6 (16K x 1 RAMs) or Z0–Z7 (64K x 1 RAMs). Note that for 4K x 1 and 16K x 1 RAMs, Z7 (Pin 35) is not needed for address information. Therefore, Pin 35 is used for a second row address select which is labeled ($\overline{RAS1}$).
		Z5†	33	
		Z4†	32	
		Z3†	31	
		Z2†	30	
		Z1†	29	
		Z0†	28	Least Significant Bit.
	RAM Control	$\overline{RAS1}$†	35	Row Address Strobe One. This pulse strobes the least significant 6,7 or 8 address bits into dynamic RAMs in Bank #1.
		$\overline{RAS0}$†	12	Row Address Strobe Zero. This pulse strobes the least significant 6,7 or 8 address bits into dynamic RAMs in Bank #0.
		$\overline{CAS}$†	11	Column Address Strobe. This pulse strobes the most significant 6,7 or 8 address bits into dynamic RAMs.
		$\overline{WE}$†	10	Write Enable. When low, this pulse enables the MPU to write into dynamic RAM.

*14.31818 MHz is 4 times 3.579545 MHz television color subcarrier. Other frequencies may be used. (See page 12.)
**When VDG and SAM are not yet synchronized the "square wave" will stretch (see page 10.)
† Due to fast transitions, ferrite beads in series with these outputs may be necessary to avoid high frequency (≈ 60 MHz) resonances.

5

This Material Copyrighted By Its Respective Manufacturer

FIGURE 2 — TIMING WAVEFORMS for MPU RATE = SLOW

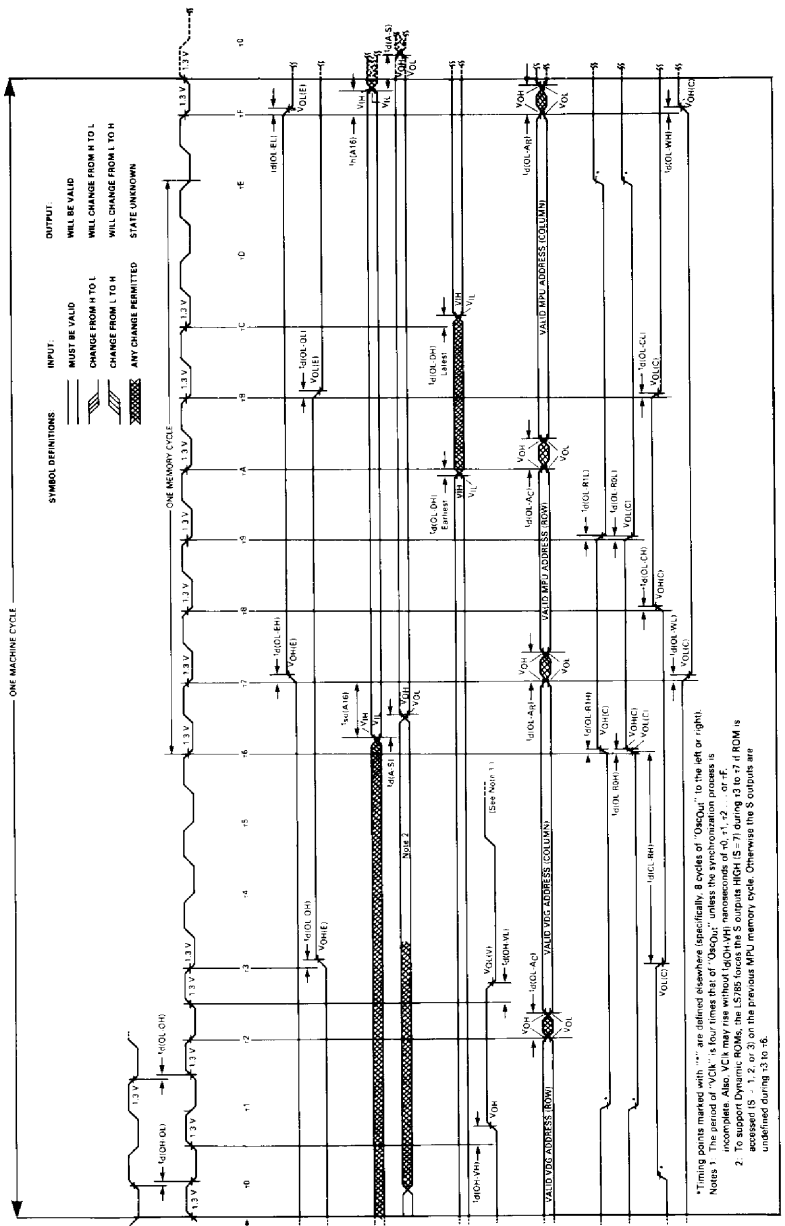

This Material Copyrighted By Its Respective Manufacturer

5

FIGURE 3 — TIMING WAVEFORMS for MPU RATE = FAST

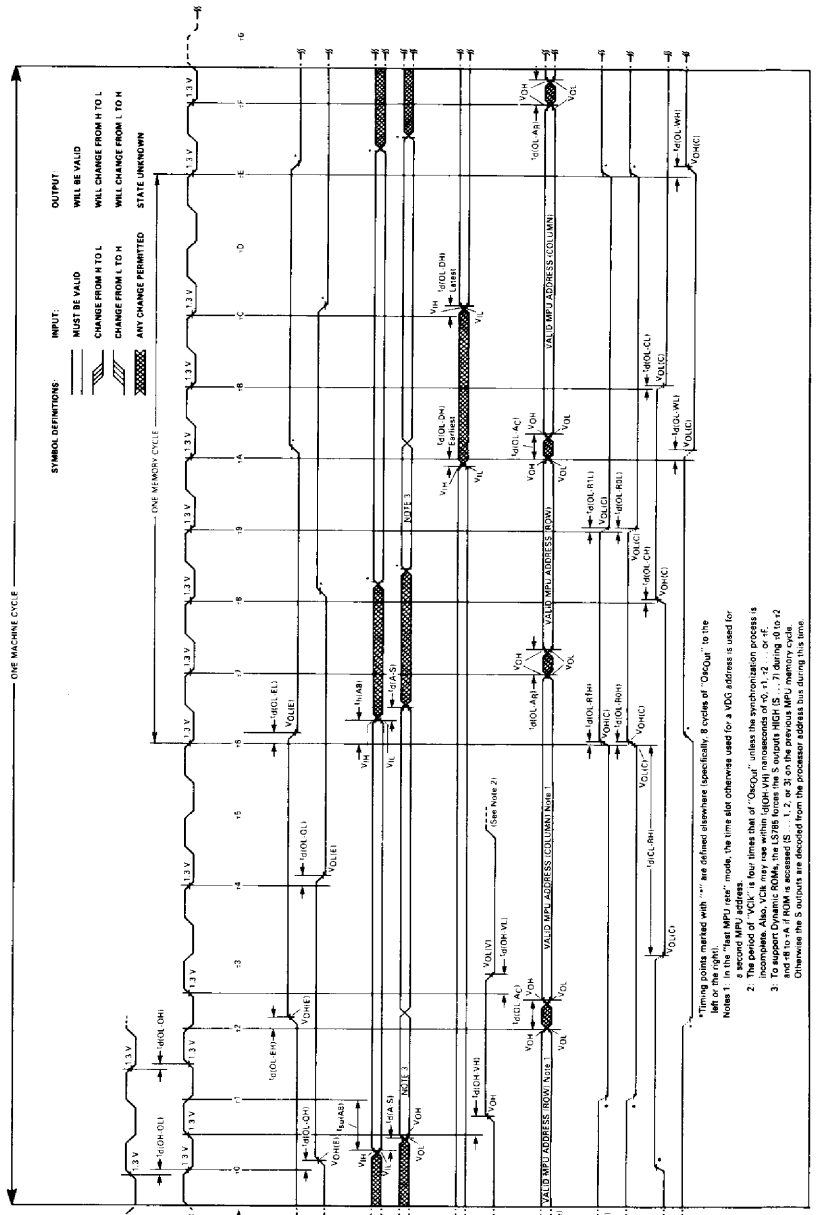

This Material Copyrighted By Its Respective Manufacturer

FIGURE 4 — SAM BLOCK DIAGRAM

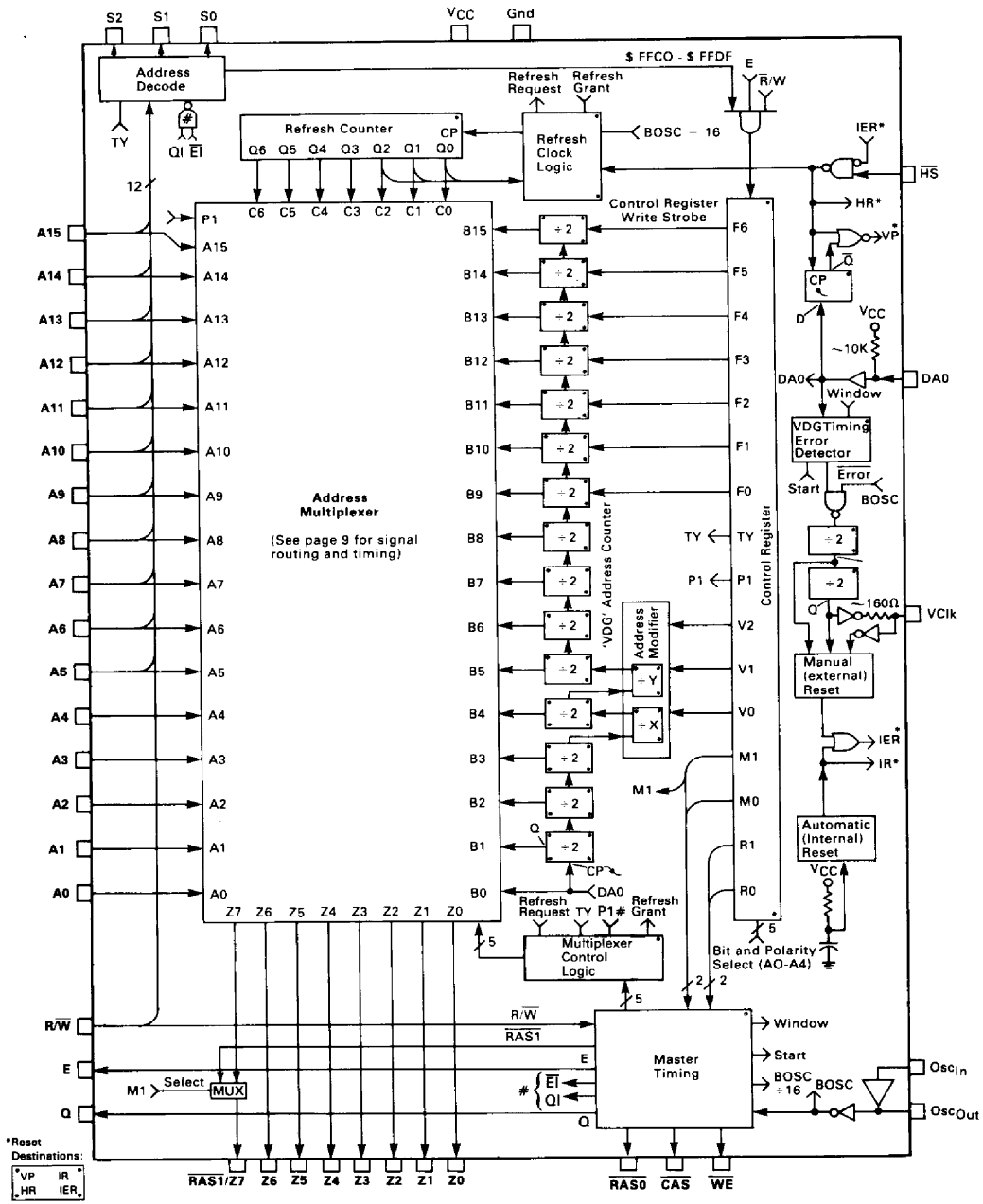

Dots indicate which internal signals reset logic blocks

#These signals/logic not used by LS783

This Material Copyrighted By Its Respective Manufacturer

SAM BLOCK DIAGRAM DESCRIPTION

MPU Addresses (A0–A15):

These 16 signals come directly from the MPU and are used to directly address up to 64K memory locations (K = 1024) or to indirectly address up to 96K memory locations, by using a paging bit "P" (see pages 17 and 18 for memory maps). Each input is approximately equivalent to one low power Schottky load.

VDG Address Counter (B0–B15):

These 16 signals are derived from one input (DA0) which is the least significant bit of the VDG address. Most of the counter is simply binary. However, to duplicate the various addressing modes of the MC6847 VDG, ADDRESS MODIFIER logic is used. Selected by three VDG mode bits (V2, V1, and V0) from the SAM CONTROL REGISTER, eight address modifications are obtained as shown in Figure 5.

Also, notice that bits B9–B15 may be loaded from bits F0–F6 from the CONTROL REGISTER. This allows the starting address of the VDG display to be offset (in 1/2K increments) from $0000 to $FFFF†. B9–B15 are loaded when a VERTICAL PRE-LOAD (VP) pulse is generated. VP goes active (high) when $\overline{HS}$ from the VDG rises if DA0 is high (or a high impedance). This condition should occur only while the TV electron beam is in vertical blanking and is simply implemented by connecting $\overline{FS}$ and $\overline{MS}$ together on the MC6847. The VP pulse also **clears** bits B1–B8.

Finally, a HORIZONTAL RESET (HR) pulse may also affect the counter by clearing bits B1–B3 or B1–B4 when $\overline{HS}$ from the VDG is LOW (see Figure 5). The HR pulse should occur only while the TV electron beam is in horizontal blanking.

In summary, DA0 clocks the VDG ADDRESS COUNTER; HR initializes the horizontal portion and VP initializes the vertical portion of the VDG ADDRESS COUNTER.

REFresh Address Counter (Q0–Q7):

A seven bit binary counter (the LS785 uses an 8-bit counter) supplies bursts of eight* sequential addresses triggered by a $\overline{HS}$ high to low transition. Thus, while the TV electron beam is in horizontal blanking, eight sequential addresses are accessed. Likewise, the next eight addresses are accessed during the next horizontal blanking period, etc. In this manner, all 128 addresses are refreshed in less than 1.1 milliseconds.

Address Multiplexer:

Occupying a large portion of the block diagram in Figure 4, is the address multiplexer which outputs bits Z0–Z7 (as addresses to dynamic RAM's). Inputs to the address multiplexer include the VDG address (B0–B15) the REFresh address (C0–C6) and the MPU address (A0–A15) or (A0–A14 plus one paging bit "P"). The paging bit "P" is one bit in the SAM CONTROL REGISTER that is used in place of A15 when memory map TYpe #0 is selected (via the SAM CONTROL REGISTER "TY" bit).

Figure 6 shows which inputs are routed to Z0–Z7 and **when** the routing occurs relative to one SAM machine cycle. Notice that Z7 and $\overline{RAS1}$ share the same pin. Z7 is selected if "M1" in the SAM CONTROL REGISTER IS HIGH (Memory size = 64K).

Address Decode:

At the top left of Figure 4, is the Address Decode block. Outputs S2, S1, and S0 form a three bit encoded binary word(S). Thus S may be one of eight values (0 through 7) with each value representing a different range of MPU addresses. (To enable peripheral ROM's or I/O, decode the S2, S1, and S0 bits into eight separate signals by using a 74LS138, 74LS155 or 74LS156.)

On the LS783, the S2, S1 and S0 outputs are not gated with any timing signals. The LS785 forces the S outputs HIGH if accessing ROM (see Memory Map, Figures 14–16) when the E clock is LOW and the Q clock is HIGH (see Timing Diagram, Figures 2–3). This logic implementation allows the LS785 to easily interface with inexpensive "dynamic" ROMs such as MCM68364.

Along with the A5–A15 inputs is the MEMORY MAP TYpe bit (TY). This bit is soft-programmable (as are **all** 16 bits in the SAM CONTROL REGISTER), and selects one of two memory maps. Memory map #0 is intended to be used in systems that are primarily **ROM** based. Whereas, memory map #1 is intended for a primarily **RAM** based system with 64K contiguous RAM locations (minus 256 locations). The various meanings of S2, S1, S0 are tabulated in Figure 16 (page 19) and again on pages 17 and 18.

In addition to S2, S1, and S0 outputs is a decode of $FFC0 through $FFDF which, when gated with E and $\overline{R}$/W, results in the write strobe for the SAM CONTROL REGISTER.

SAM Control Register

As shown in Figure 4, the CONTROL REGISTER has 16 "outputs":

VDG Addressing Modes:	V2, V1, V0	MPU Rate:	R1, R0
VDG Address OFFset:	F6, F5, F4, F3, F2, F1, F0	Memory Size (RAM):	M1, M0
32K Page Switch:***	P	Memory Map TYpe:	TY

When the SAM is reset (see page 10), all 16 bits are cleared. To **set** any one of these 16 bits, the MPU simply **writes** to a unique** **odd** address (within $FFC1 through $FFDF). To **clear** any one of these 16 bits, the MPU simply writes to a unique** **even** address (within $FFC0 through $FFDE). Note that the **data** on the MPU data bus is irrevelant.

Inputs to the control register include A4, A3, A2, A1 (which are used to select **which one** of 16 bits is to be cleared or set), A0 (which determines the polarity . . . clear or set), and $\overline{R}$/W, E and $FFC0–$FFDF) (which restrict the method, timing and addresses for changing one of the 16 bits). For more detailed descriptions of the purposes of the 16 control

* If $\overline{HS}$ is held low longer than 8 μs, then the number of sequential addresses in one refresh "BURST" is proportional to the time interval during which $\overline{HS}$ is low.

** See pages 17 or 18 for specific addresses.

*** The P bit is also used to select 16K x 4 bit dynamic RAM operation in the LS785. See the Page switch definition in the Programming Guide section.

† In this document, the "$" symbol always preceeds hexidecimal characters.

This Material Copyrighted By Its Respective Manufacturer

bits, refer to related sections in the BLOCK DIAGRAM DESCRIPTION (pages 8 through 12) and the PROGRAMMING GUIDE (pages 14 through 18).

** See pages 17 or 18 for specific addresses.

FIGURE 5 — VDG ADDRESS MODIFIER

Mode			Division Variables		Bits Cleared by HS (low)
V2	V1	V0	X	Y	
0	0	0	1	12	B1–B4
0	0	1	3	1	B1–B3
0	1	0	1	3	B1–B4
0	1	1	2	1	B1–B3
1	0	0	1	2	B1–B4
1	0	1	1	1	B1–B3
1	1	0	1	1	B1–B4
1	1	1	1	1	None (DMA MODE)

FIGURE 6 — SIGNAL ROUTING for ADDRESS MULTIPLEXER

Memory Size			Signal Source	Row/Column	Signals Routed to Z0–Z7								Timing (Figure 2)
	M1	M0			Z7	Z6	Z5	Z4	Z3	Z2	Z1	Z0	
4K ①	0	0	MPU	ROW	②	A6	A5	A4	A3	A2	A1	A0	T7–TA
				COL	②	LOW	A11	A10	A9	A8	A7	A6	TA–TF
			VDG	ROW	②	B6	B5	B4	B3	B2	B1	B0	TF–T2
				COL	②	LOW	B11	B10	B9	B8	B7	B6	T2–T7
			REF	ROW	②	C6	C5	C4	C3	C2	C1	C0	TF–T2
				COL	②	LOW	LOW	LOW	LOW	LOW	LOW	LOW	T2–T7
16K x 1	0	1	MPU	ROW	②	A6	A5	A4	A3	A2	A1	A0	T7–TA
				COL	②	A13	A12	A11	A10	A9	A8	A7	TA–TF
			VDG	ROW	②	B6	B5	B4	B3	B2	B1	B0	TF–T2
				COL	②	B13	B12	B11	B10	B9	B8	B7	T2–T7
			REF	ROW	②	C6	C5	C4	C3	C2	C1	C0	TF–T2
				COL	②	LOW	LOW	LOW	LOW	LOW	LOW	LOW	T2–T7
16K x 4 (Page bit = 1)	0	1	MPU	ROW	A7	A6	A5	A4	A3	A2	A1	A0	T7–TA
				COL	③	A13	A12	A11	A10	A9	A8	A7	TA–TF
			VDG	ROW	B7	B6	B5	B4	B3	B2	B1	B0	TF–T2
This mode only available with LS785				COL	③	B13	B12	B11	B10	B9	B8	B7	T2–T7
			REF	ROW	C7	C6	C5	C4	C3	C2	C1	C0	TF–T2
				COL	LOW	LOW	LOW	LOW	LOW	LOW	LOW	LOW	T2–T7
64K (dynamic)	1	0	MPU	ROW	A7	A6	A5	A4	A3	A2	A1	A0	T7–TA
				COL	P/A15③	A14	A13	A12	A11	A10	A9	A8	TA–TF
			VDG	ROW	B7	B6	B5	B4	B3	B2	B1	B0	TF–T2
				COL	B15	B14	B13	B12	B11	B10	B9	B8	T2–T7
			REF	ROW	C7④	C6	C5	C4	C3	C2	C1	C0	TF–T2
				COL	LOW	LOW	LOW	LOW	LOW	LOW	LOW	LOW	T2–T2
64K (static)	1	1	MPU	ROW	A7	A6	A5	A4	A3	A2	A1	A0	T7–T9
				COL	P/A15③	A14	A13	A12	A11	A10	A9	A8	T9–TF
			VDG	ROW	B7	B6	B5	B4	B3	B2	B1	B0	TF–T1
				COL	B15	B14	B13	B12	B11	B10	B9	B8	T1–T7
			REF	ROW	C7④	C6	C5	C4	C3	C2	C1	C0	TF–T1
				COL	LOW	LOW	LOW	LOW	LOW	LOW	LOW	LOW	T1–T7

① When using 4K x 1 RAMs, two banks of eight IC's are allowed. This accounts for Addresses $0000–1FFF. Also, this same RAM can be addressed at $2000–$3FFF, $4000–$5FFF and $6000–$7FFF.

② Z7 functions as $\overline{RAS1}$ and its level is address dependent. For example, when using two banks of 16K x 1 RAMs, $\overline{RAS0}$ is active for addresses $0000 to $3FFF and $\overline{RAS1}$ is active for addresses $4000 to $7FFF.

③ If Map TYpe = 0, then page bit "P" is the output (otherwise A15). This is a "don't care" situation for 16K x 4 MOS RAM inputs.

④ C7 = Low on LS783.

5

This Material Copyrighted By Its Respective Manufacturer

Internal Reset

By lowering V_{CC} below 0.6 volts for at least one millisecond, a **complete** SAM reset is initiated and is completed within 500 nanoseconds after V_{CC} rises above 4.25 volts.

NOTE: In some applications, (for example, multiple "VDG-RAM" systems controlled by a single MPU) **multiple** SAM ICs can be synchronized as follows:

- Drive all SAM's from one external oscillator.
- Stop external oscillator.
- Lower V_{CC} below 0.6 volts for at least 1.0 millisecond.
- Raise V_{CC} to 5.0 volts.
- Start external oscillator.
- Wait at least 500 nanoseconds.

Now, the "E" clocks from all SAM's should be in-phase.

External Reset

When the VClk pin on SAM is forced below 0.8 volts for at least eight cycles of "oscillator-out", the SAM becomes **partially** reset. That is, all bits in the SAM control register are cleared. However, signals such as $\overline{RAS}$, $\overline{CAS}$, $\overline{WE}$, E or Q are **not** stopped (as they are with an **internal** reset), since the SAM must maintain dynamic RAM refresh even during this external reset period.

Figure 7 shows how VClk can be pulled low through diode D1 when node "A" is low.* When node "A" is high, only the backbiased capacitance of diode D1 loads the 3.58 MHz on VClk. Diode D2 helps discharge C1 (Power-on-Reset capacitor) when power is turned off. Diode D3 allows the MPU reset time constant R2C2 to be greater than the SAM reset time constant. Thereby, ensuring **release** of the SAM reset **prior to** attempting to program the SAM control register.

FIGURE 7 — EXTERNAL RESET CIRCUITRY

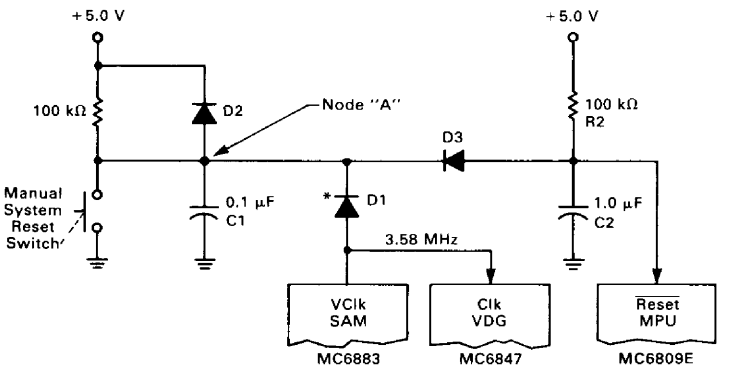

VDG Synchronization

In order for the VDG and MPU to share the same dynamic RAM (see page 13,) the **VDG clock must be stopped** until the VDG data fetch and MPU data fetch are synchronized as shown in Figure 12. Once synchronized, the VDG clock resumes its 3.579545 MHz rate and is not stopped again unless an extreme temperature change (or SAM reset) occurs. When stopped, the VDG clock remains stopped for **no more than** 32 Osc_{Out} cycles (approximately 2 microseconds.)

In the block diagram in Figure 4, DA0 enters a block labeled VDG Timing Error Detector. If DA0 rises **between** time reference points** τ_A and τ_C, then $\overline{Error}$ is high and VClk is the result of dividing BOSC (Buffered Osc_{Out} ≈ 14 MHz) by four. However, if DA0 rises **outside** the time Window τ_A to τ_C, then $\overline{Error}$ goes LOW and the VDG stops. A START pulse at time reference point τ_B (center of Window) restarts the VDG . . . properly synchronized.

*Use a diode with sufficiently low forward voltage drop to meet V_{IL} requirement at VClk.

**See timing diagrams on page 5 and 6.

This Material Copyrighted By Its Respective Manufacturer

Changing the MPU Rate (by changing SAM control register bits R0, R1).

Two bits in the SAM control register determine the period of both "E" and "Q" MPU clocks. Three rate modes are implemented as follows:

RATE MODE	R1	R0	
SLOW	0	0	The frequency of "E" (and "Q") is f crystal ÷ 16. This rate mode is automatically selected when the SAM is reset. Note that system timing is least critical in this "SLOW" rate mode.
A.D. (Address Dependent)	0	1	The frequency of "E" (and "Q") is either f crystal ÷ 16 or f crystal ÷ 8, depending on the address the MPU is presenting.
FAST	1	X	The frequency of "E" (and "Q") is f crystal ÷ 8. This is accomplished by stealing the time that is normally used for VDG/REFRESH, and using this time for the MPU. Note: Neither VDG display nor dynamic RAM refresh are available in the "FAST" rate mode. (Both are available in SLOW and A.D. rate modes).

When changing between any two of the three rate modes, the following procedures must be followed to ensure that MPU timing specifications are met:

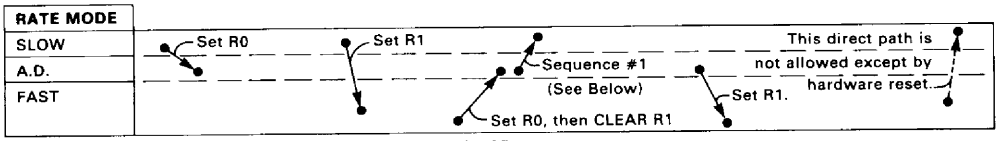

May be ANY address from $0000 to $7FFF.

SEQUENCE #1:

```
7D 00 00  TST #$0000 . . . Synchronizes STA instruction to write during T2-TG (See Figure #8).*
21 00     BRN 00
B7 FF D6  STA #$FFD6 . . . Clears bit R0
```

*Note: "TST" instruction affects MC6809E condition code register.

Changing the MPU Rate (In Address Dependent Mode)

When the SAM control register bits "R1", and "R0" are programmed to "0" and "1", respectively, the Address Dependent Rate Mode is selected. In this mode, the ÷ 16 MPU rate is automatically used when addressing within $0000 to $7FFF* or $FF00 to $FF1F ranges. Otherwise the ÷ 8 MPU rate is automatically used. (Refer to Figure 8 for sample "E" and "Q" waveforms yielding ÷ 8 to ÷ 16 and ÷ 16 to ÷ 8 rate changes). This mode often nearly doubles the MPU throughput while still providing transparent VDG and dynamic, RAM refresh functions. For example, since much of the MPU's time may be spent performing internal MPU functions (address = $FFFF)**, accessing ROM (address = $8000 to $FEFF) or accessing I/O (address = $FF20 — $FF5F), the faster f crystal ÷ 8 MPU rate may be used much of the time.

Note: The VDG operates normally when using the SLOW or A.D. rate modes. However, in the FAST rate mode, the VDG is not allowed access to the dynamic RAM.

FIGURE 8 — RATE CHANGE E AND Q WAVEFORMS

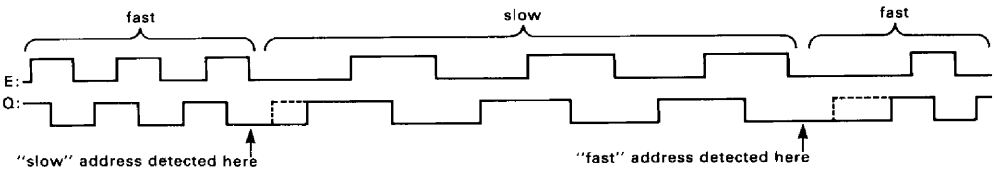

*When using Memory Map 0, addresses $0000 to $7FFF may access Dynamic RAM.
**The MC6809 outputs $FFFF on A0–A15 when no other valid addresses are being presented.

This Material Copyrighted By Its Respective Manufacturer

Oscillator

In Figure 4, an amplifier between Osc_{In} and Osc_{Out} provides the gain for oscillation (using a crystal as shown in Figure 9.) Alternately, Pin 5 (Osc_{In}) may be grounded while Pin 6 (Osc_{Out}) may be driven at low-power Schottky levels as shown in Figure 10. Also, see V_{IH}, V_{IL} on page 2.

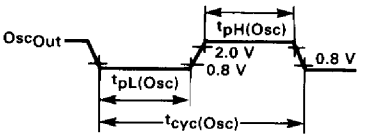

AC Specifications*

	Max	Typ	Min	Units
$t_{pH(Osc)}$	—	30	22	ns
$t_{pL(Osc)}$	—	30	22	ns
$t_{cyc(Osc)}$	—	70	62.4	ns

FIGURE 9 — CRYSTAL OSCILLATOR

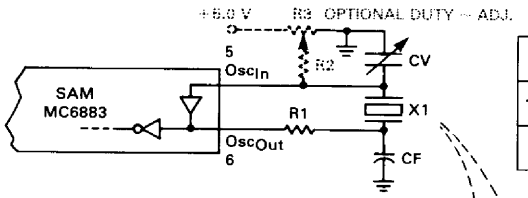

Suggested Component Values

Freq. MHz	CV*	CF*	R1*	R2*	R3*	X1
14.31818	2.5–30 pF	33 pF	1.5 kΩ	~ 100K	10K	*
16.0000	2.5–30 pF	33 pF	1.5 kΩ	~ 100K	10K	*

Recommended Crystal Parameters

	14.31818 MHz**	16.0000 MHz**
R_S	10 Ω ± 2.0 Ω	10 Ω ± 2.0 Ω
CO	5.0 pF ± 1.5 pF	6.0 pF ± 1.0 pF
C1	0.0245 pF ± 15%	0.0319 pF ± 15%
L1	5.05 mH	3.1 mH
Q	50K ± 10K	40K ± 10K

Calibration Tolerance: 0.002% at 26°C
Temperature Tolerance: 0.001% 0°C to 70°C

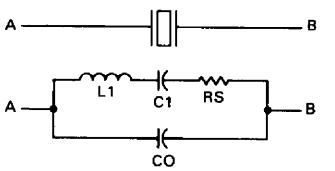

FIGURE 10 — TTL CLOCK INPUT

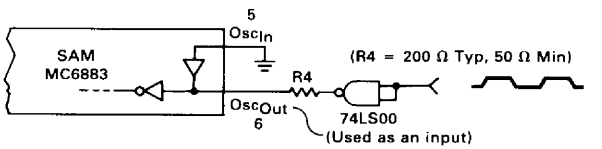

Typical input capacitances are 3.0 pF for Pin 5 and 5.5 pF for Pin 6.

*Optimum values depend on characteristics of the crystal (X1). For many applications, VClk must be 3.579545 MHz ± 50 Hz! Hence, Osc_{Out} must be made similarly "drift resistant" (by balancing temperature coefficients of X1, CV, CF, R1, R2 and R3).
**Specifically cut for the SAM are International Crystal Manufacturing, Inc. Crystals (#167568 for 14.31818 MHz or #167569 for 16.0 MHz). However, other crystals may be used.

This Material Copyrighted By Its Respective Manufacturer

THEORY OF OPERATION

Video or No Video

Although the SAM may be used as a dynamic RAM controller **without** a video display*, most applications are likely to include a MC6847 video display generator (VDG). Therefore, this document emphasizes use of the SAM with MC6847 systems.

Shared RAM (with interleaved DMA)

To minimize the number of RAM and interface chips, both the MPU and VDG share common dynamic RAM. Yet, the use of common RAM creates an apparent difficulty. That is, the MPU and VDG must both access the RAM without contention. This difficulty is overcome by taking advantage of the timing and architecture of Motorola MPU's (MC6800, MC6801E, MC6809E, MC68000). Specifically, **all** MPU accesses of external memory **always** occur in the **latter half** of the machine cycle, as shown below:

FIGURE 11 — MOTOROLA MPU TIMING

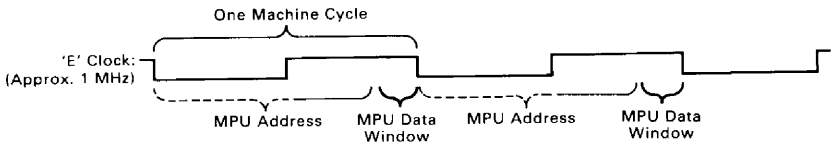

Similarly, the MC6847 (non-interlaced) VDG transfers a data byte in a half machine cycle (E or Φ2). Thus, when properly positioned, VDG and MPU RAM accesses interleave without contention as shown below:

FIGURE 12 — MOTOROLA MPU WITH VDG TIMING

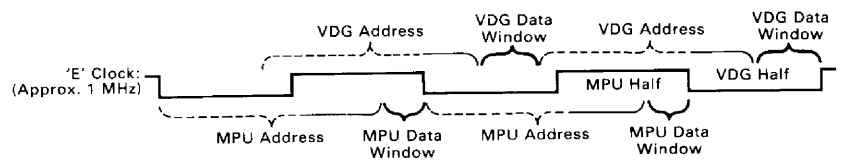

This Interleaved Direct Memory Access (IDMA) is synchronized via the MC6883 by centering the VDG data window half-way between MPU data windows.**

The result is a shared RAM system without MPU/VDG RAM access contention, with both MPU and VDG running uninterrupted at normal operating speed, each transparent to the other.

RAM Refresh

Dynamic RAM refresh is accomplished by accessing eight*** sequential row addresses every 64*** microseconds until all addresses have been accessed. To avoid RAM access contention between REFRESH and MPU, each of the refresh accesses occupies the "VDG half" of the interleaved DMA (IDMA). Furthermore, refresh accesses occur only during the television retrace period (at which time the VDG doesn't need to access RAM).

In summary, the VDG, MPU and SAM's Refresh Counter all transparently access the common dynamic RAM without contention or interruption.

Why IDMA?

Use of the interleaved direct memory access results in fast modification to variable portions of display RAM, by the MPU, without any distracting flashes on the screen (due to RAM access contention). In addition, the MPU is not slowed down nor stopped by the SAM; thereby, assuring accurate software timing loops without costly additional hardware timers. Furthermore, additional hardware and software to give "access permission" to the MPU is eliminated since the MPU may access RAM at **any** time.

*Only 1 pin, (DA0) out of 40 pins is dedicated to the video display.
**See VDG synchronization (page 10) for more detail.
***When not using a MC6847, $\overline{HS}$ may be wired low for continuous transparent refresh.

This Material Copyrighted By Its Respective Manufacturer

"Systems On Silicon" Concept

Total Timing

For most applications, the SAM can supply complete system timing from its on-chip precision 14.31818 MHz oscillator. This includes buffered MPU clocks (E and Q), VDG clock, color subcarrier (3.58 MHz), row address select ($\overline{RAS}$), column address select ($\overline{CAS}$) and write enable ($\overline{WE}$).

Total Address Decode

For most applications, the SAM plus a "1 of 8 decoder" chip completely decodes I/O, ROM and RAM chip selects without wasting memory address space and without needlessly chopping-up contiguous address space. Chip selects are positioned in address space to allow three types of memory (RAM, local ROM and cartridge ROM) independent room for growth. For example, RAM may grow from address $0000-up, cartridge ROM may grow from address $FEFF-down and local ROM may grow from $BFFF-down. Alternately, if the application requires minimum ROM and maximum contiguous RAM, a second choice of two memory maps places RAM from $0000 to $FEFF. (See Figures 14–16.)

In both memory maps all I/O, MPU vectors, SAM control registers, and some reserved address spaces are efficiently contained between addresses $FF00 and $FFFF.

How Much RAM?

Using nine SAM pins (Z0–Z7 and $\overline{RAS0}$) the following combinations require no additional address logic.

FIGURE 13 — RAM CONFIGURATIONS

Address: MSB LSB	Chip Select:	
Z5Z4Z3Z2Z1Z0	$\overline{RAS0}$	One or two banks of 4K x 8 (like MCM4027's)
Z5Z4Z3Z2Z1Z0	$\overline{RAS1}$ (=Z7)	
Z6Z5Z4Z3Z2Z1Z0	$\overline{RAS0}$	One or two banks of 16K x 8 (like MCM4116's)
Z6Z5Z4Z3Z2Z1Z0	$\overline{RAS1}$ (=Z7)	
Z7Z6Z5Z4Z3Z2Z1Z0	$\overline{RAS0}$	One bank of 64K x 8 (like MCM6665's) or one bank of 16K x 4 (like TMS4416's)

5

PROGRAMMING GUIDE

SAM — Programmability

The SAM contains a 16-bit control register which allows the MC6809E to program the SAM for the following options:

VDG Addressing Mode	3-bits
VDG Address Offset	7-bits
32K Page Switch	1-bit
MPU Rate	2-bits
Memory Size	2-bits
Map Type	1-bit

Note that when the SAM is **reset** by first applying power or by manual hardware reset,† all control register bits are **cleared** (to a logic "0").

VDG Addressing Mode

Three bits (V2, V1, V0) control the sequence of DISPLAY ADDRESSES generated by the SAM (which are used to scan dynamic RAM for video information). For example, if you wish to display Dynamic RAM data as INTERNAL ALPHANUMERICS VIDEO, you should program‡ the MC6847 for the INTERNAL ALPHANUMERICS MODE **and** CLEAR BITS V2, V1 and V0 in the SAM. The table on the following page summarizes the available modes:

† See Figure 7 for manual reset circuit.
‡ Typically, part of a PIA (MC6821) at location $FF22 is used to control MC6847 modes. (See MC6847 Data Sheet.)

This Material Copyrighted By Its Respective Manufacturer

Mode Type	MC6847 Mode					SAM Mode		
	G/$\overline{A}$	GM2‡	GM1‡	GM0‡ EXT/$\overline{I}$	CSS	V2	V1	V0
Internal Alphanumerics	0	X	X	0	X	0	0	0
External Alphanumerics	0	X	X	1	X	0	0	0
OSemigraphics — 4	0	X	X	0	X	0	0	0
Semigraphics — 6	0	X	X	1	X	0	0	0
Semigraphics — 8*	0	X	X	0	X	0	1	0
Semigraphics — 12*	0	X	X	0	X	1	0	0
Semigraphics — 24*	0	X	X	0	X	1	1	0
Full Graphics — 1C	1	0	0	0	X	0	0	1
Full Graphics — 1R	1	0	0	1	X	0	0	1
Full Graphics — 2C	1	0	1	0	X	0	1	0
Full Graphics — 2R	1	0	1	1	X	0	1	1
Full Graphics — 3C	1	1	0	0	X	1	0	0
Full Graphics — 3R	1	1	0	1	X	1	0	1
Full Graphics — 6C	1	1	1	0	X	1	1	0
Full Graphics — 6R	1	1	1	1	X	1	1	0
Direct Memory Access†	X	X	X	X	X	1	1	1

* S8, S12, & S24 modes are **not** described in the MC6847 Data Sheet. See appendix "A".
† DMA is identical to 6R except as shown in Figure 5 on page 9.
‡ The function of these control bits differs on the T1 version of the 6847. See the MC6847T1 data sheet for details.

VDG Address Offset

Seven bits (F6, F5, F4, F3, F2, F1 and F0) determine the **Starting Address** for the video display. The "Starting Address" is defined as "the address corresponding to data displayed in the **Upper Left** corner of the TV screen." The "Starting Address" is shown below in binary:

F6	F5	F4	F3	F2	F1	F0	0	0	0	0	0	0	0	0	0

Most Significant Bit

Least Significant Bit

Note that the "Starting Address" may be placed anywhere within the 64K address space with a resolution of 1/2K (the size of one alphanumeric page).

Page Switch

One bit (P1) is used "in place of" A15 from the MC6809E in order to refer access within $0000-$7FFF to one of two 32K byte **pages** of RAM. For systems using the LS783 and 32K bytes of RAM or less, the Page bit serves no useful function and is a "don't care." The LS785 uses the Page bit in conjunction with the memory size bits to determine whether 16K x 1 or 16K x 4 DRAM is being accessed. P1 is set for 16K x 4 and cleared for 16K x 1. The Page bit must also be cleared for the LS785 to function with 4K x 1 DRAMs.

5

This Material Copyrighted By Its Respective Manufacturer

MPU Rate

Two bits (R1, R0) control the clock rate to the MC6809E MPU. The options are:

RATE (FREQUENCY OF "E" CLOCK)	R1	R0
0.9 MHz (Crystal Frequency ÷ 16) Slow	0	0
0.9/1.8 MHz (Address Dependent Rate)	0	1
1.8 MHz (Crystal Frequency ÷ 8) Fast	1	X
(Typical Crystal Frequency = 14.31818 MHz)		

In the "address dependent rate" mode, accesses to $0000-$7FFF and $FF00-$FF1F are slowed to 0.9 MHz (crystal frequency ÷ 16) and all other addresses are accessed at 1.8 MHz (crystal frequency ÷ 8).
Note: "Slow" (0.9 MHz) operation can be accomplished using 1.0 MHz MC6809E and MC6821 devices. For "Fast" (1.8 MHz) operation, 2.0 MHz MC68B09E and MC68B21 devices must be used.

Memory Size

Two bits (M1 and M0) determine RAM memory size. the options are:

SIZE	M1	M0
One or two banks of 4K x 1 dynamic RAMs	0	0
One or two banks of 16K x 1 dynamic RAMs	0	1
One bank of 16K x 4 dynamic RAMs①	0	1
One bank of 64K x 1 dynamic RAMs	1	0
Up to 64K static RAM*	1	1

① This option is only available when using the LS785.
* Requires a latch for demultiplexing the RAM address

IMPORTANT!

Note: Be sure to program the SAM for the correct memory size **before** using RAM (i.e., for a subroutine stack).

Map Type

One bit (TY) is used to select between two memory map configurations.

Refer to Figures 14–16 for details. Early versions of the LS783 did not allow the "Fast" MPU rate to be used in conjunction with Map Type "TY = 1." Devices manufactured after January 1, 1983 allow both "Fast" and "Slow" MPU rates to be used with Map Type "TY = 1." (Date of manufacture is marked on devices as YYWW where YY is the year and WW is the week of manufacture).

Writing To The SAM Control Register

Any bit in the control register (CR) may be set by writing to a specific unique address. Each bit has two unique addresses . . . writing to the **even** # address **clears** the bit and writing to the **odd** # address **sets** the bit. (Data on the data bus is irrelevant in this procedure.) The specific addresses are tabulated in Figures 14–16.

If desired, a short routine may be written to program the SAM CR "a word at a time." For example, the following routine copies "B" bits from "A" register to SAM CR addresses beginning with address "X."

```
SAM1    46        ROR   A
        24  06    BCC   SAM2
        30  01    INX   (LEAX1,X)
        A7  80    STA   O,X+
        20  02    BRA   SAM3
SAM2    A7  81    STA   O,X++
SAM3    5A        DEC   B
        26  F2    BNE   SAM1
        39        RTS
```

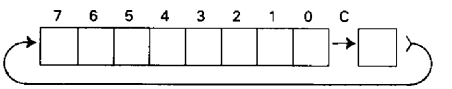

This Material Copyrighted By Its Respective Manufacturer

FIGURE 14 — MEMORY MAP (TYPE #0)

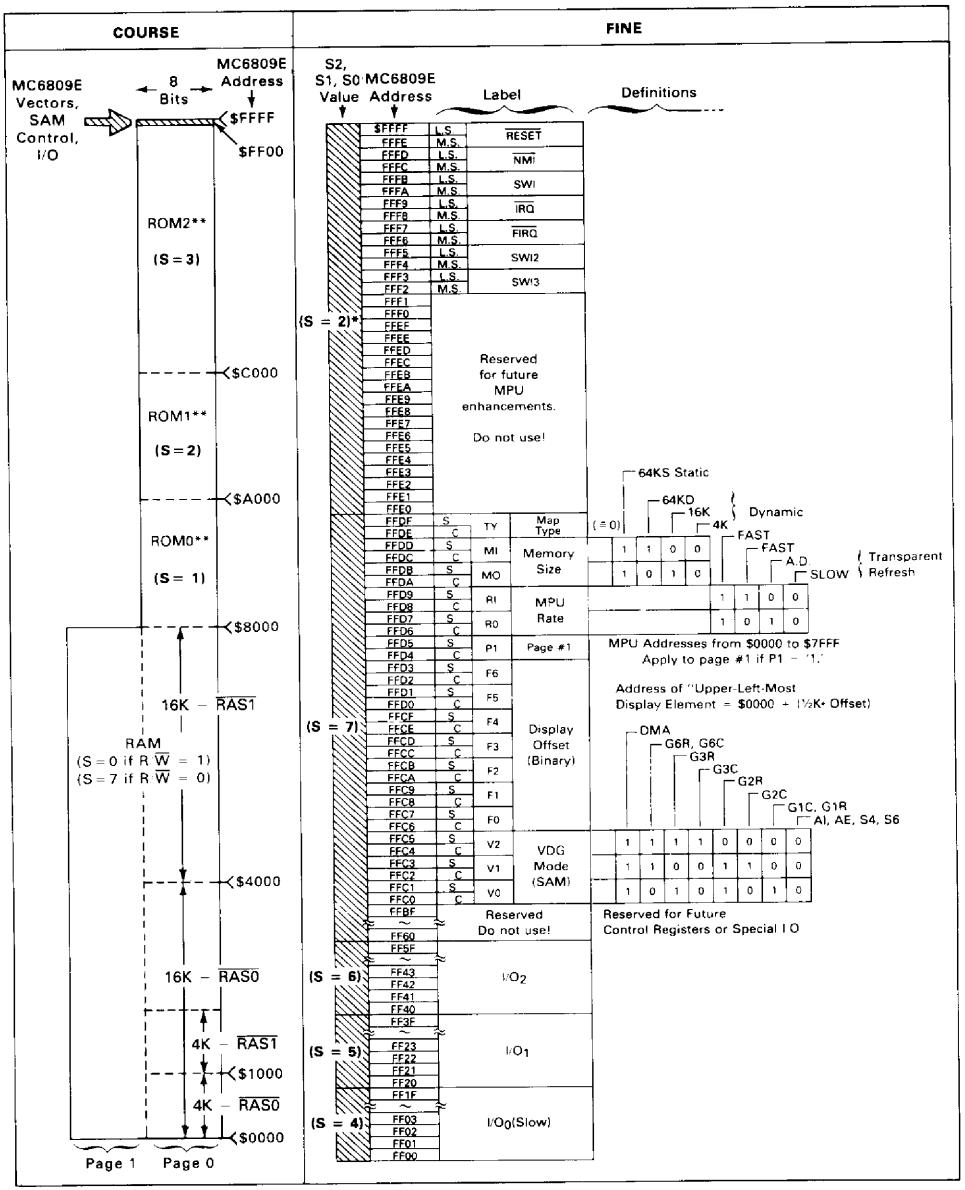

Abbreviations:
M.S. = Most Significant
L.S. = Least Significant
S = Set Bit
C = Clear Bit (All bits are cleared when SAM is reset.)
S = Device Select value = 4 x S2 + 2 x S1 + 1 x S0

NOTES:
*On LS785, S = 7 if R/W = 0
**This memory area may also be RAM. However, locations $FFE0-$FFFF must be ROM when using LS785.

This Material Copyrighted By Its Respective Manufacturer

FIGURE 15 — LS783 MEMORY MAP (TYPE #1 64K RAM)

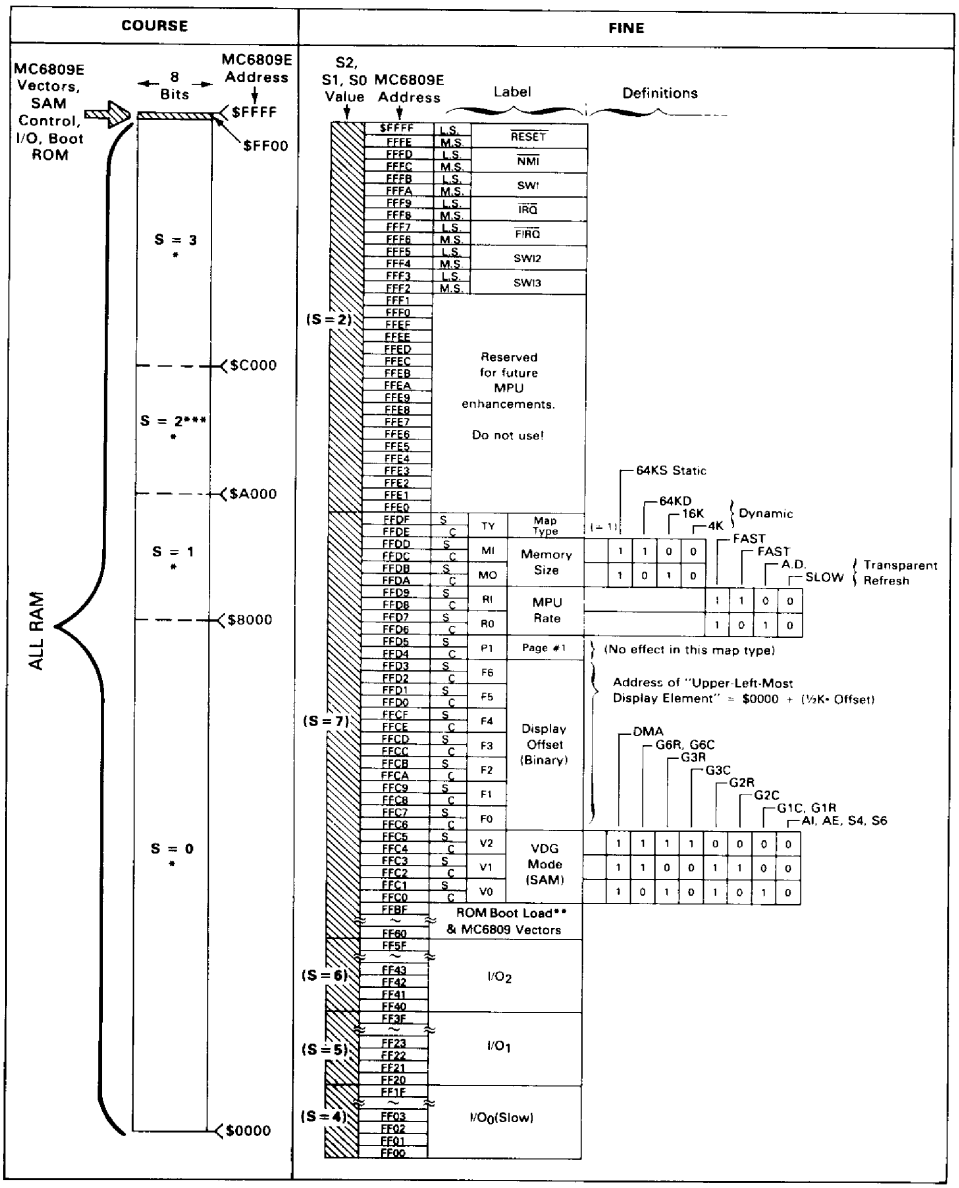

Abbreviations:
M.S. = Most Significant
L.S. = Least Significant
S = Set Bit
C = Clear Bit (All bits are cleared when SAM is reset.)
S = Device Select value = 4 x S2 + 2 x S1 + 1 x S0

NOTES:
*S = 0 if R/$\overline{W}$ = 1
**Decode S2, S1, and S0 with an open collector SN74LS156 and 'wire-or' state 7 with state 2. (See Appendix B for suggested decode circuit.)
***To avoid ROM enable during R/$\overline{W}$ = LOW, the ROM at S = 2 must be gated with R/$\overline{W}$. (See Appendix B for suggested decode circuit.)

This Material Copyrighted By Its Respective Manufacturer

FIGURE 16 — LS785 MEMORY MAP (TYPE #1 64K RAM)

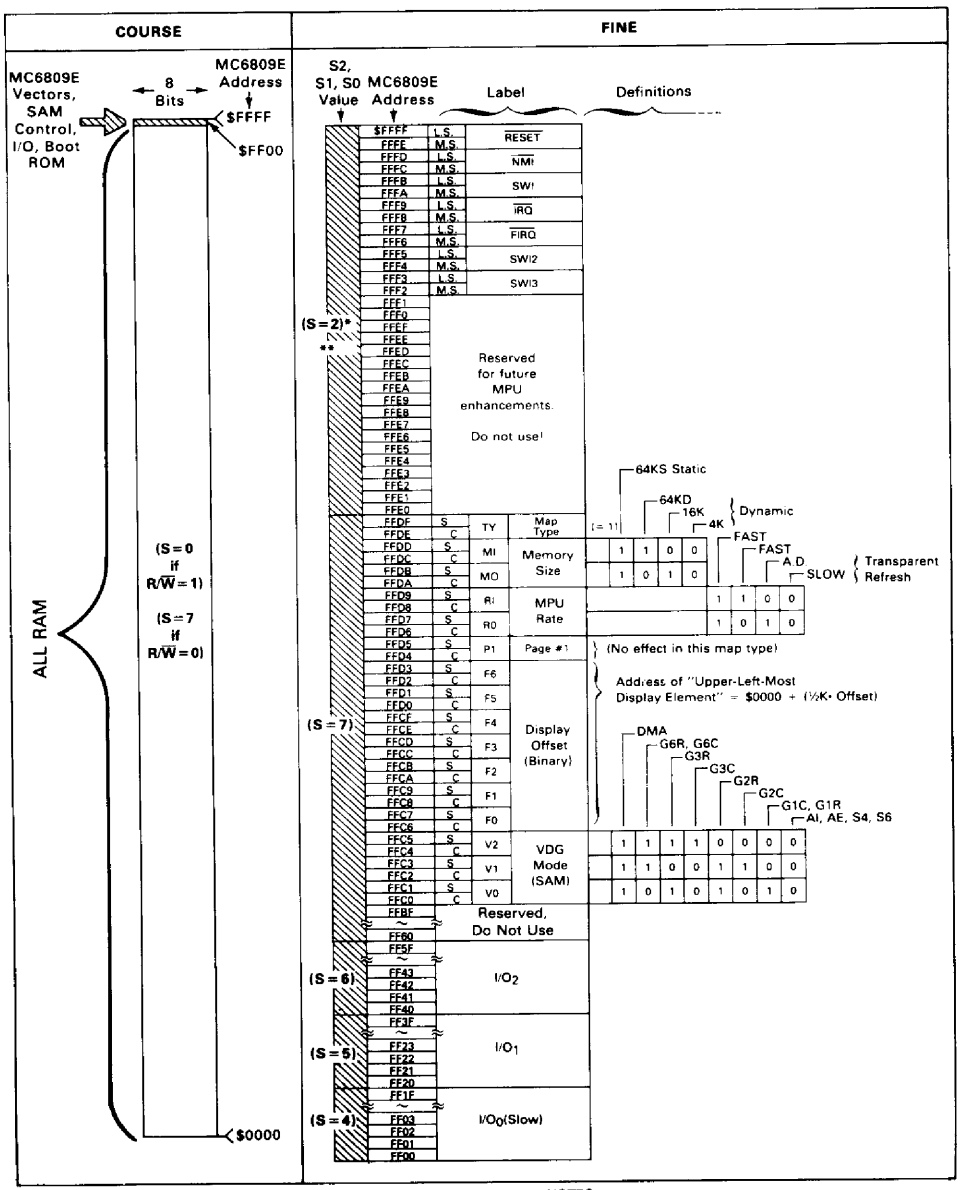

Abbreviations:
M.S. = Most Significant
L.S. = Least Significant
S = Set Bit
C = Clear Bit (All bits are cleared when SAM is reset.)
S = Device Select value = 4 x S2 + 2 x S1 + 1 x S0

NOTES:
*S = 7 if R/$\overline{W}$ = 0
**Memory locations $FFE0-$FFFF cannot be written to (i.e. write protected).

This Material Copyrighted By Its Respective Manufacturer

FIGURE 17 — MEMORY ALLOCATION TABLE
(Also, see the memory MAPs on pages 17 and 18.)

Type # 0: (Primarily for ROM based systems)

Address Range	Intended Use
$FFF2 to FFFF	MC6809E Vectors: $\overline{\text{Reset}}$, $\overline{\text{NMI}}$, SWI, $\overline{\text{IRQ}}$, $\overline{\text{FIRQ}}$, SWI2, SWI3.
FFE0 to FFF1	Reserved for future MPU enhancements.
FFC0 to FFDF	SAM Control Register: V0, – V2, F0 – F6, P, R0, R1, M0, M1, TY.
FF60 to FFBF	Reserved for future control register enhancements.
FF40 to FF5F	I/O_2: Input/Output (PIAs, ACIAs, etc.) To subdivide, use A0 – A4.
FF20 to FF3F	I/O_1: Input/Output (PIAs, ACIAs, etc.) To subdivide, use A0 – A4.
FF00 to FF1F	I/O_0: Input/Output (PIAs, ACIAs, etc.) To subdivide, use A0 – A4.
C000 to FEFF	ROM2: 16K addresses. External cartridge ROM*.
A000 to BFFF	ROM1: 8K addresses. Internal ROM*. Note that MC6809E vector addresses select this ROM*.
8000 to 9FFF	ROM0: 8K addresses. Internal ROM*.
0000 to 7FFF	RAM: 32K addresses. RAM shared by MPU and VDG.

*Not restricted to ROM. For example, RAM or I/O may be used here.

Type # 1: (Primarily for RAM based systems)

Address Range	Intended Use
$FFF2 to FFFF	MC6809E Vectors: $\overline{\text{Reset}}$, $\overline{\text{NMI}}$, SWI, $\overline{\text{IRQ}}$, $\overline{\text{FIRQ}}$, SWI2, SWI3.
FFE0 to FFF1	Reserved for future MPU enhancements.
FFC0 to FFDF	SAM Control Register: V0 – V2, F0 – F6, P, R0, R1, M0, M1, TY.
FF60 to FFBF	Small ROM: Boot load program and initial MC6809 vectors.
FF40 to FF5F	I/O_2: Input/Output (PIAs, ACIAs, etc.) To subdivide, use A0 – A4.
FF20 to FF3F	I/O_1: Input/Output (PIAs, ACIAs, etc.) To subdivide, use A0 – A4.
FF00 to FF1F	I/O_1: Input/Output (PIAs, ACIAs, etc.) To subdivide, use A0 – A4.
0000 to FEFF	RAM: 64K(–256) addresses, shared by MPU and VDG. (If $R/\overline{W}$ = 0 then S = 3 for $C000-$FEFF; S = 2 for $A000-$BFFF; S = 1 for $8000-$9FFF and S = 7 for $0000-$7FFF.)

5

APPENDIX A

Providing a Clock for MC6800 Microprocessors

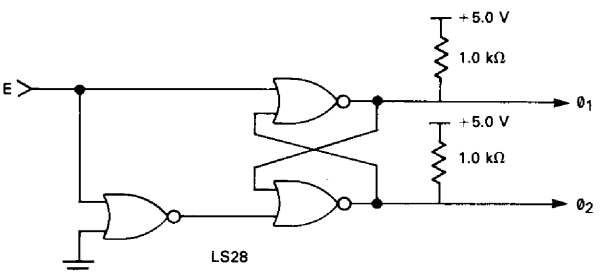

This Material Copyrighted By Its Respective Manufacturer

APPENDIX B

Memory Decode for LS783 "MAP TYPE = 1"

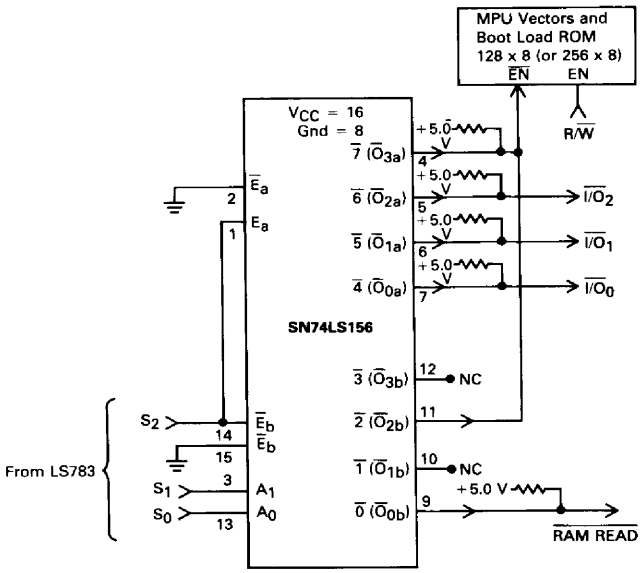

APPENDIX C
VDG/SAM Video Display System Offers 3 New Modes

by
Paul Fletcher

There are three new modes created when the VDG and SAM are used together in a video display system. These modes offer alphanumeric compatibility with 8 color low-to-high resolution graphics, 64H x 64 V, 64H x 96 V, 64H x 192 V. The new modes S8, S12, and S24 are created by placing the VDG in the Alpha Internal mode and having the SAM in a 2K, 3K or 6K full color graphics mode. In all modes the VDG's S/$\overline{A}$ and Inv. pins are connected to data bits DD7 and DD6 to allow switching on the fly between Alpha and Semigraphics and between inverted and non-inverted alpha. This method is used in most VDG systems to obtain maximum flexibility.

The three modes divide the standard 8*12 dot box used by the VDG for the standard alpha and semigraphics modes into eight 4*3 dot boxes for the S8 mode, twelve 4*2 dot boxes for the S12 mode, and twenty-four 4*1 dot boxes for the S24 mode. Figure 17 shows the arrangement of these boxes. One byte is needed to control two horizontally consecutive boxes. It therefore takes four bytes for the S8, six bytes for the S12, and 12 bytes for the S24 mode to control the entire 8*12 dot box. These two horizontally consecutive boxes have four combinations of luminance controlled by bits B0–B3. For convenience B2 should be made equal to B0 and B3 should be made equal to B1. This eliminates a screen placement problem which would cause other codes to change patterns when moved vertically on the screen. The illuminated boxes can be one of eight colors which are controlled by B4–B6 (see Figure 18). The bytes needed to control all the boxes in the 8*12 dot box must be spaced 32 address spaces apart in the display RAM because of the addressing scheme originally used in the VDG and duplicated by the SAM. This means to place an alphanumeric character on the TV screen it requires 4, 6, or 12 bytes depending on the mode used. These bytes are placed 32 memory locations apart in the display RAM (see Figure 18). This multiple byte format allows the mixing of character rows of different characters in the same 8*12 dot box creating new characters and symbols. It also allows overlining and underlining in eight colors by switching to semigraphics at the correct time.

These new modes optimize the memory versus screen density tradeoffs for RF performance on color TVs. This could make them the most versatile of all the modes depending on the users creativity and the software sophistication.

This Material Copyrighted By Its Respective Manufacturer

FIGURE C1 — DISLAY MODES S8, S12, S24
Bit/Visible Dot Correlation

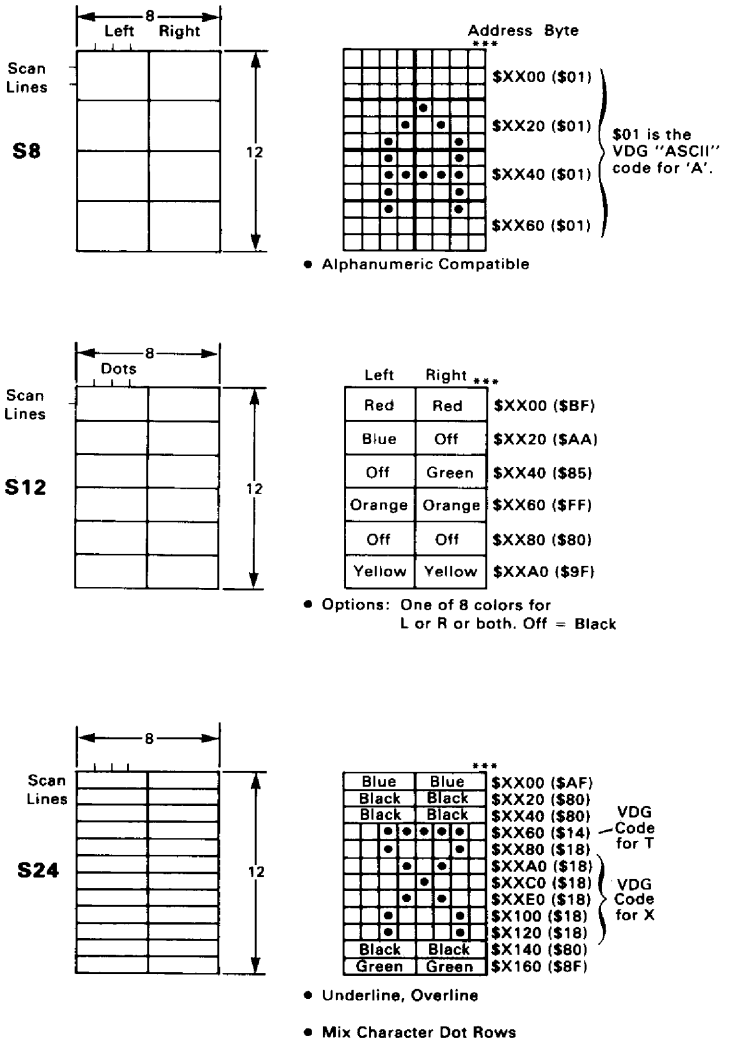

*** Characters will always remain in standard VDG positions.

5

This Material Copyrighted By Its Respective Manufacturer

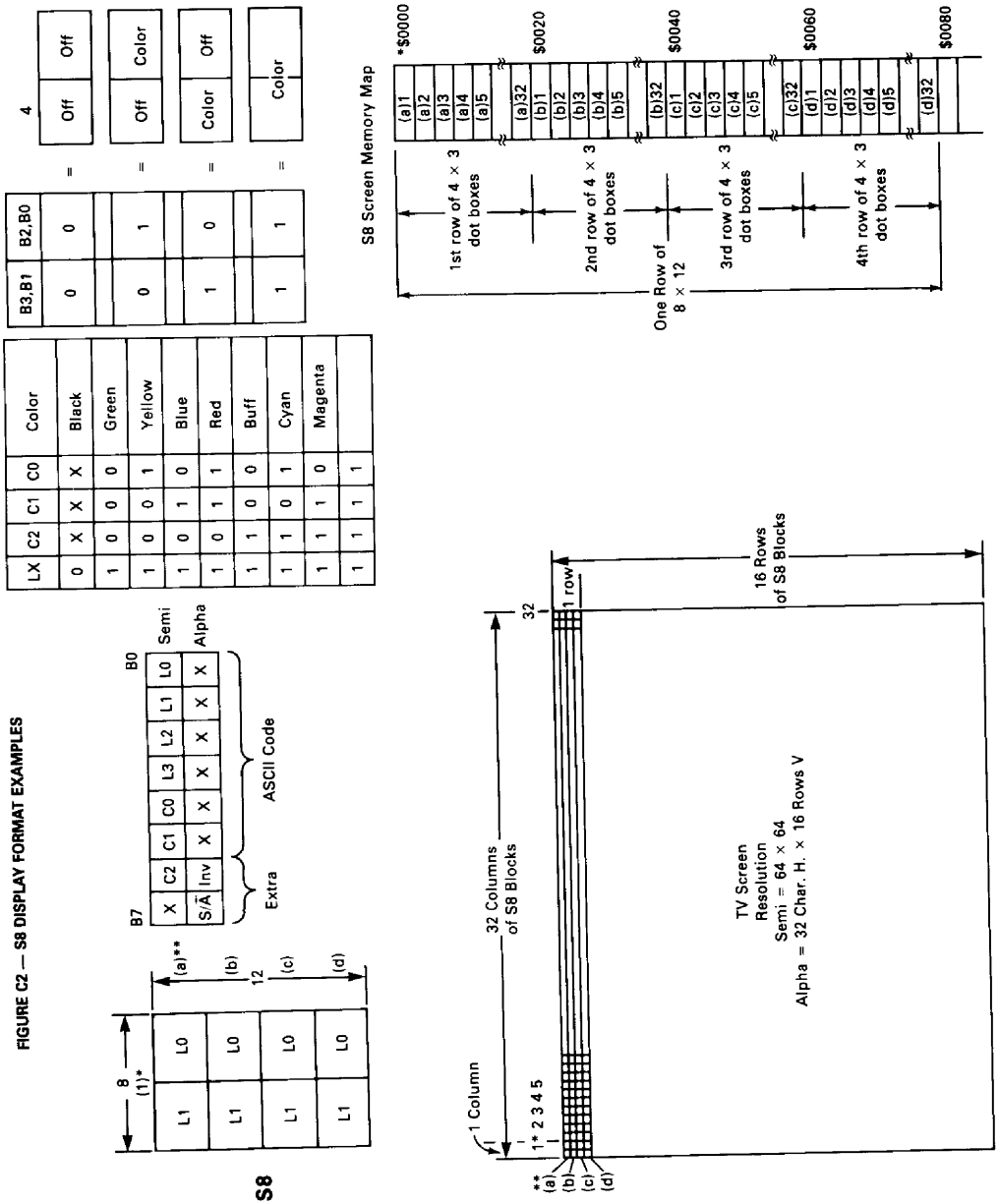

FIGURE C2 — S8 DISPLAY FORMAT EXAMPLES

This Material Copyrighted By Its Respective Manufacturer

FIGURE 18 — EQUIVALENT OF OSCILLATOR INPUT AND OUTPUT

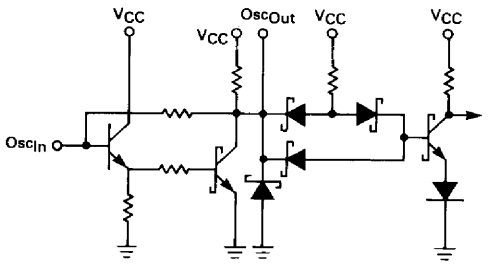

FIGURE 19 — DA0 INPUT

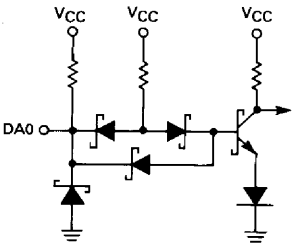

FIGURE 20 — VClk INPUT/OUTPUT

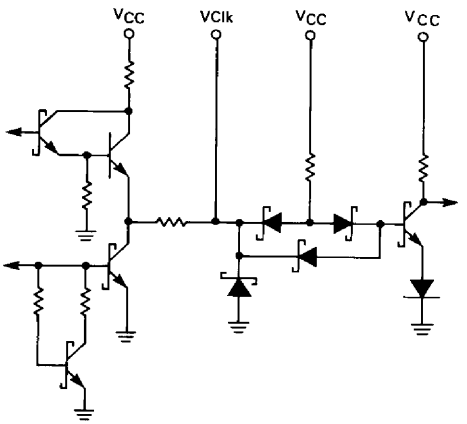

FIGURE 21 — E AND Q OUTPUTS

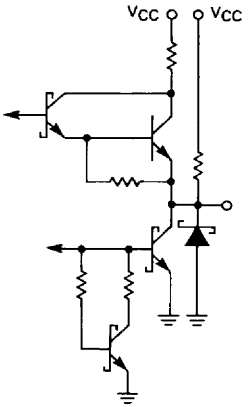

FIGURE 22 — TYPICAL INPUT

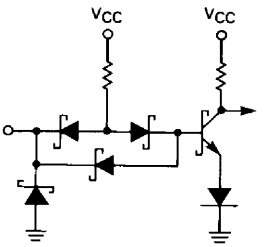

FIGURE 23 — TYPICAL OUTPUT

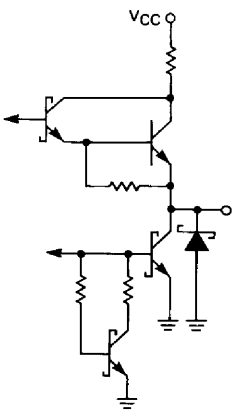

5

This Material Copyrighted By Its Respective Manufacturer

FIGURE 24— EXAMPLE of MC6809E, MC6883 and MC6847 COMPUTER

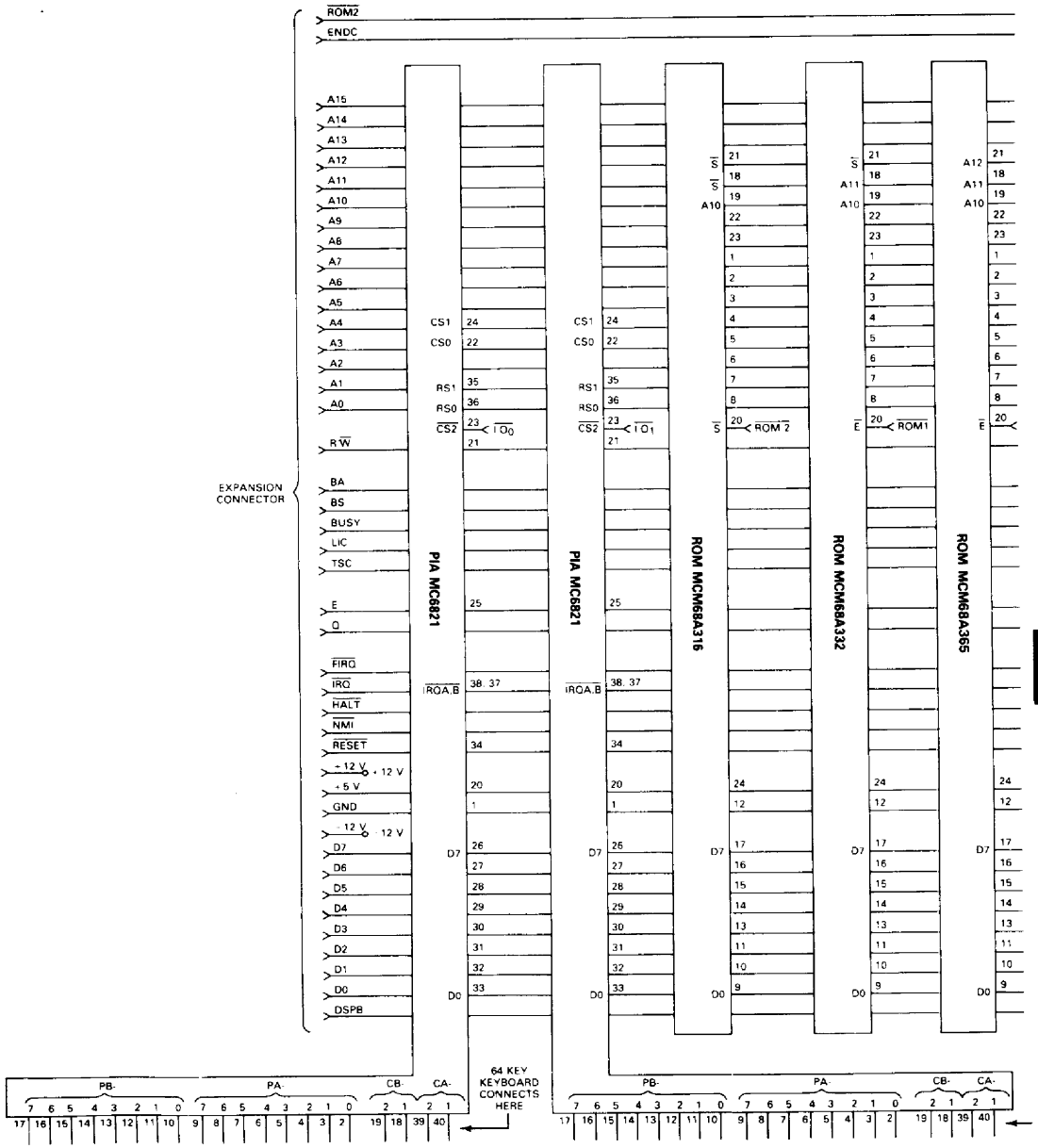

This Material Copyrighted By Its Respective Manufacturer

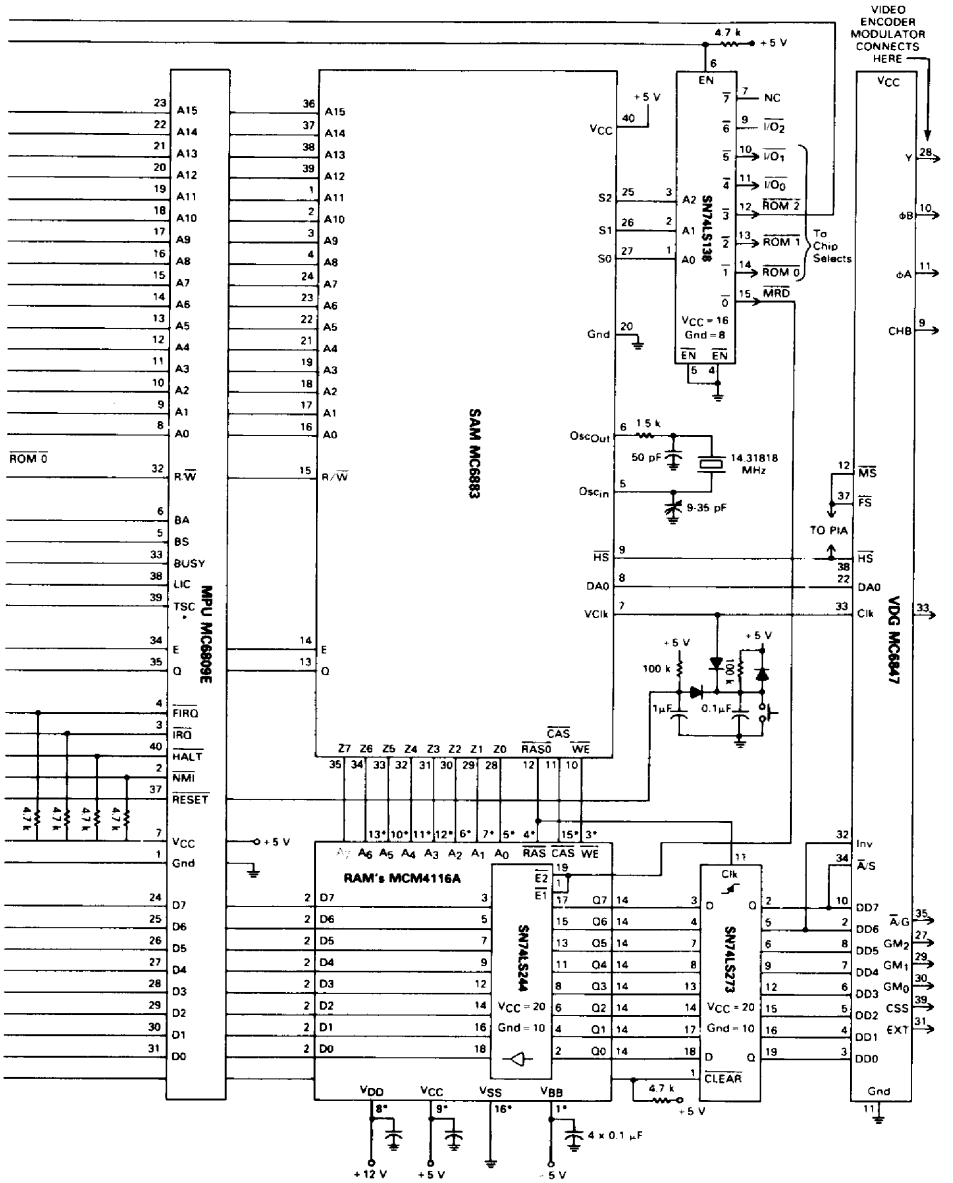

*This pin number on 8 different RAM chips is connected to this point.

This Material Copyrighted By Its Respective Manufacturer