KONAMI®

TWO PLAYER

HORIZONTAL MONITOR KIT

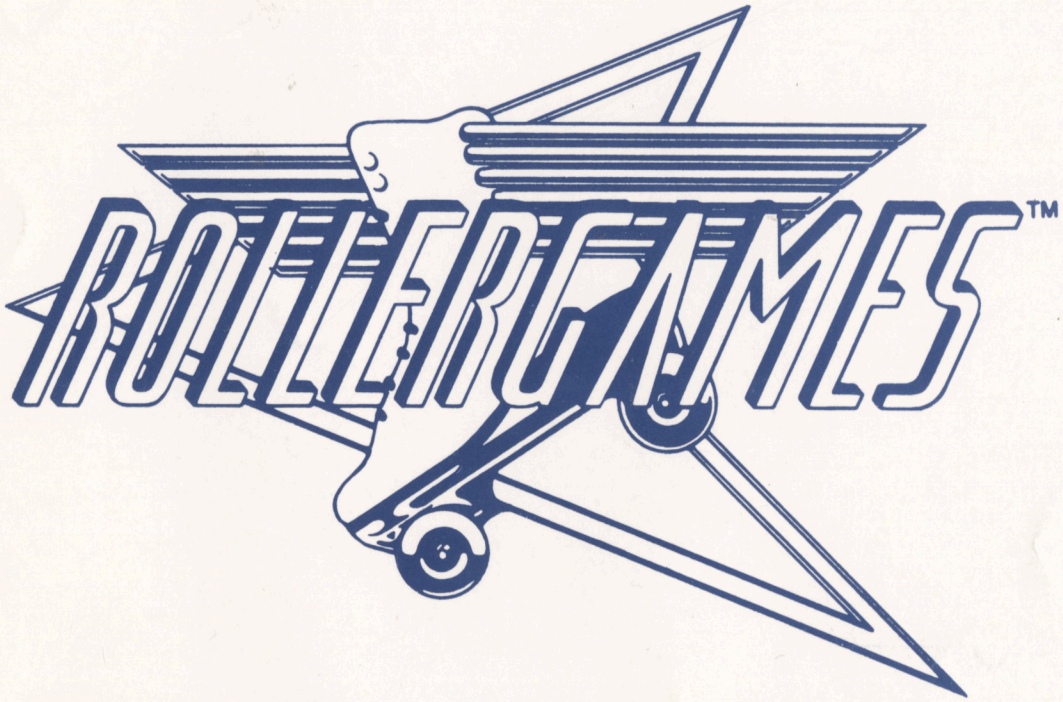

Service #

708-215-5100

Jerry Korbecki ext. 122

INSTRUCTION MANUAL

KONAMI® is a trademark of Konami Industry Co., Ltd.

"Rollergames" and "World Alliance RollerSports" are trademarks.
©1991 Sams/Miller Productions and Motown Productions, Inc.
All Rights Reserved.

Part No. 999400

ROLLERGAMES KIT CONTENTS

Quantity	Part #	Description
1	999003	Rollergames PCB
1	999100	Rollergames CPO
1	999200	Rollergames Marquee
1	999101	Rollergames Player Instruction
2	999301	Rollergames Side Decal
1	999400	Rollergames Manual
1	30304	Red Joystick
1	30305	Blue Joystick
2	30254	White Microswitch Button
2	30255	Red Microswitch Button
2	30258	Blue Microswitch Button
1	40605	FCC Cage
1	40614	Kit Box
1	40904	Kit (Jamma) Harness
1	40310	Marquee Plexiglass

RECOMMENDED CONTROL PANEL LAYOUT

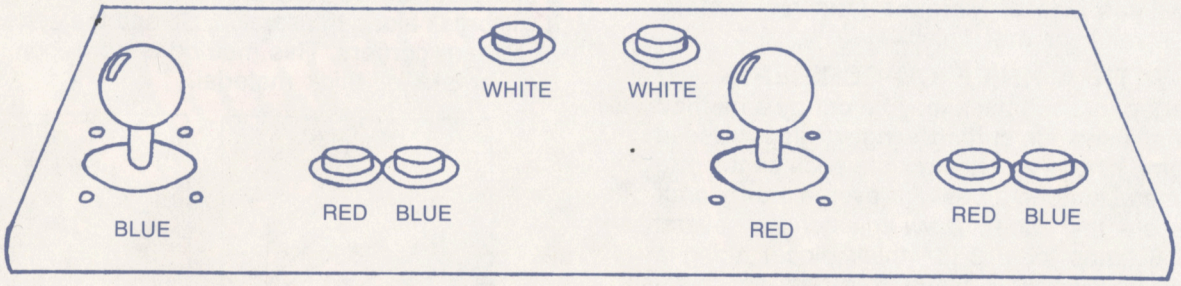

PUTTING YOUR BEST GAME FORWARD

PREPARATION:

For best results, all old graphics should be removed completely from the cabinet. "Stick-on" graphics can be removed by using a hairdryer or hot air device. The heat from the dryer will loosen the adhesive, allowing you to easily peel them off — any adhesive residue can be cleaned off with acetone and a soft dry cloth. (DO NOT USE ACETONE ON SURFACES PAINTED WITH FLAT PAINT.)

TOOLS YOU NEED:

1. Foaming Aerosol (such as "Windex").
2. Soft Squeegee.
3. X-Acto Knife.

SIDE PANEL DECALS

1. Spray area of cabinet where Side Panel decals are to be applied with foaming aerosol or a mild soap solution.
2. Remove protective backing from decals.
3. Position decals into place.
4. With a soft squeegee, beginning from the center of the decal, slowly and evenly press out excess foam until you achieve a smooth finish.
5. Allow to set approximately 2 to 3 hours before handling. Maximum adherence is achieved in 48 to 72 hours.
6. Trim side decal to fit your cabinet.

CONTROL PANEL OVERLAY:

1. Refer to Recommended Control Panel Layout.
2. Drill any new holes needed.
3. Plug any holes that will not be used. (A permanent epoxy-filler works well for this step.)
4. Pre-position the overlay prior to removing the backing.
5. Slowly apply the overlay — inch by inch on the control panel, removing the backing as you apply it.
6. Once it's in place, by using an X-Acto knife, cut around the button and joystick placements.

INSTRUCTION/BUTTON DECALS:

Apply the Player Instruction, Button and 1 Player/2 Player decals in their respective positions. Apply pressure liberally. Allow to set as long as possible before putting game on location.

NOTE: Maximum adherence is achieved in 48 to 72 hours.

MARQUEE

(WEAR PROTECTIVE GLASSES WHILE TRIMMING MARQUEE)

1/8" Acrylic Marquee should be cut to fit your game. DO NOT remove protective mask until this is done.

One way of cutting your Marquee is as follows: (Be sure to protect painted side of Marquee from any surface which may scratch or mar finish).

CUTTING WITH A KNIFE OR SCRIBER:

Acrylic sheet up to 3/16" thick may be cut by a method similar to that used for cutting window glass. Use a scriber of some kind — a scribing knife such as the one pictured, a metal scriber, an awl, or even a sturdy craft knife — to score the sheet. Draw the scriber several times (7 or 8 times for a 3/16" thick piece) along a straight edge held firmly in place. It is best not to remove the protective masking. Make the cuts carefully using firm, even pressure. For best results make each stroke cleanly off the edge of the sheet.

Then clamp the acrylic sheet or hold it rigidly under a straight edge with the scribe mark hanging just over the edge of a table. Protect your hands with a cloth, and apply a sharp downward pressure to the other side of the sheet. It will break along the scratch. Scrape the edges to smooth any sharp corners. This method is not recommended for long breaks or thick material.



Always draw the scribing knife along a straight edge.

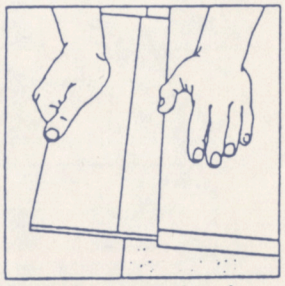

Break sheet over edge of table after scribing.

P.C.B. CAGE INSTALLATION

Konami, Inc. now supplies a new style P.C.B. cage which is superior to old style cages because of ease of installation. The cage is made of a 32 point stem-stock which is fire retardant.

TO INSTALL THE CAGE:

1. Open cage bottom and secure to desired P.C.B. position.
2. Install printed circuit board inside cage using wood screws, screwed through the cage bottom into cabinet side.
3. Close the cage over printed circuit board and secure with latch on cage.

ROLLERGAMES TECHNICAL INFORMATION

Rollergames requires horizontally mounted monitor. It also generates composite negative sync. If your monitor is composite positive sync, you will have to change to composite negative sync.

To alternate composite positive sync to composite negative sync, use 7404 IC or 74LS04 IC. The signal on the output pin from the P.C.B. is a combination of H-sync and V-sync.

NOTE: Please refer to Figure 2.

FIGURE 2:

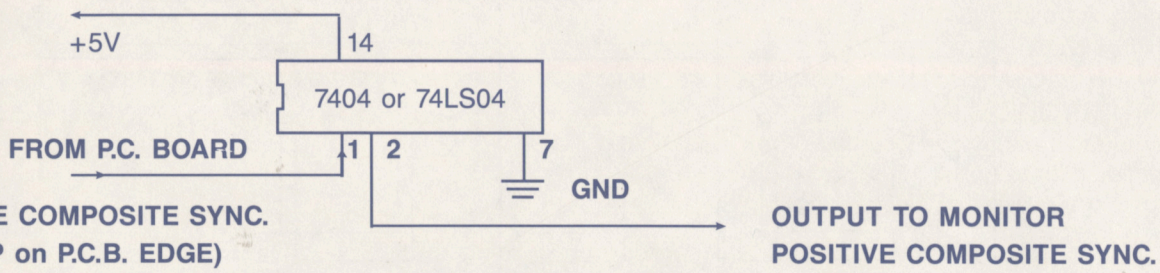

(+5V and GND should be taken out of the P.C. Board.)

TROUBLE SHOOTING GUIDE

PROBLEM:	POSSIBLE SOLUTION
No Screen or Constant Reset	1). Check +5V line at the P.C.B. Adjust if necessary. 2). Make sure all socketed eproms and custom IC's are seated securely. Apply light pressure to secure. 3). Check harness to be sure it is not on backwards.
No Sound	1). Check +12V line at the P.C.B. 2). Make sure both speaker out wires are connected to the speakers. (DO NOT CONNECT A GROUND.)
Distorted Sound	1). Replace cabinet speaker.
I/O Problem (coin 1 doesn't work or Joystick Up doesn't work, etc.)	1). Do not hook a coin counter to the coin 1 or coin 2 outputs. This will cause damage. 2). Check your schematic for the 74LS253 IC that corresponds to your I/O problem. Check the appropriate pin with a scope or multimeter for a high output (5V), if output is low replace the 74LS253.

CAUTION

DO NOT WIRE COIN COUNTERS TO THE COIN 1 OR COIN 2 OUTPUTS. THIS WILL CAUSE DAMAGE TO THE I/O MICROCHIP 74LS253. COIN COUNTERS CAN ONLY BE WIRED TO COIN COUNTER OUTPUTS.

WIRING DIAGRAM

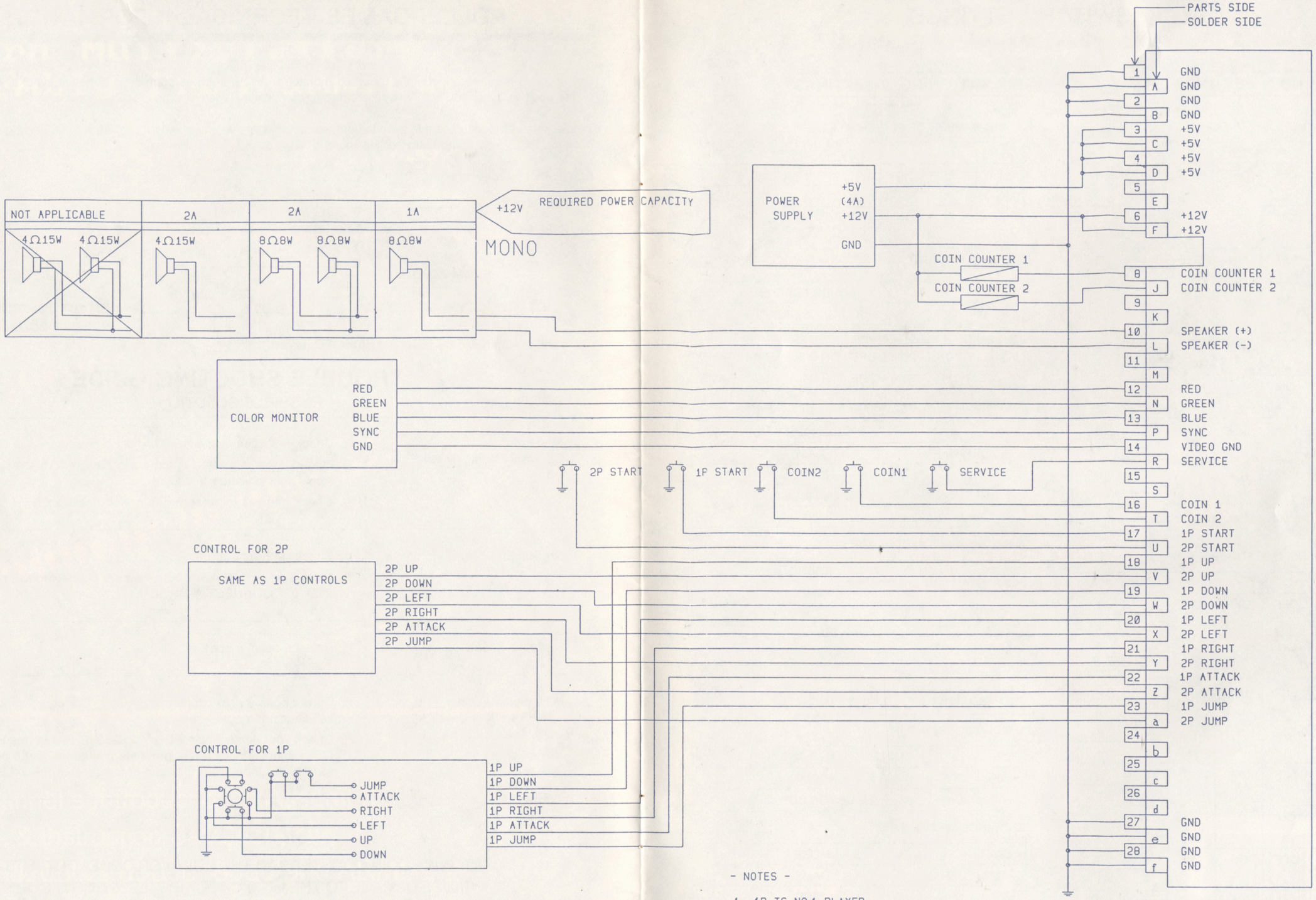

- NOTES -

1 1P IS NO.1 PLAYER

2 2P IS NO.2 PLAYER

3 SURGE KILLER DIODES FOR COIN COUNTER INSTALLED ON P.C.B

JAMMA 56PIN EDGE CONNECTOR
5/32 INCH PITCH

DIP SWITCH SETTINGS

DIP SWITCH NO. 1 SETTINGS

1. COIN SWITCH NO. 1 SETTINGS

SW	1	2	3	4	COIN	PLAY
○	OFF	OFF	OFF	OFF	1	1
	ON				1	2
	OFF	ON			1	3
	ON				1	4
	OFF	OFF	ON	OFF	1	5
	ON				1	6
	OFF	ON			1	7
	ON				2	1
	OFF	OFF	OFF	ON	2	3
	ON				2	5
	OFF	ON			3	1
	ON				3	2
	OFF	OFF	ON	ON	3	4
	ON				4	1
	OFF	ON			4	3
	ON				FREEPLAY	

FREEPLAY: You can play games without coins.

2. COIN SWITCH NO. 2 SETTINGS

SW	5	6	7	8	COIN	PLAY
○	OFF	OFF	OFF	OFF	1	1
	ON				1	2
	OFF	ON			1	3
	ON				1	4
	OFF	OFF	ON	OFF	1	5
	ON				1	6
	OFF	ON			1	7
	ON				2	1
	OFF	OFF	OFF	ON	2	3
	ON				2	5
	OFF	ON			3	1
	ON				3	2
	OFF	OFF	ON	ON	3	4
	ON				4	1
	OFF	ON			4	3
	ON				VOID	

DIP SWITCH NO. 2 SETTINGS

1. THE NUMBER OF PLAYER'S LIFE

SW	1	2	NUMBER
○	OFF	OFF	1
	ON		2
	OFF	ON	3
	ON		5

2. BONUS ENERGY

SW	4	5	BONUS ENERGY
○	OFF	OFF	NO BONUS ENERGY
	ON		25% MORE FOR WIN IN EACH CYCLE
	OFF	ON	25% MORE FOR WIN IN EACH GAME
	ON		50% MORE FOR WIN IN EACH GAME

3. DIFFICULTY OF THE GAME

SW	6	7	DIFFICULTY
○	OFF	OFF	EASY
	ON		NORMAL
	OFF	ON	DIFFICULT
	ON		VERY DIFFICULT

4. SOUND IN ATTRACTIVE MODE

SW	8	SOUND
○	OFF	OFF
	ON	ON

SW3 is not used.

DIP SWITCH NO. 3 SETTINGS

1. VIDEO SCREEN FLIP

SW	1	
○	OFF	NORMAL
	ON	UPSIDE DOWN

2. CHANGE OF MODE

SW	3	MODE
○	OFF	GAME
	ON	TEST

SW2 and SW4 are not used.
○ shows recommended settings.

ROLLERGAMES WIRING DIAGRAM

WIRE COLOR KEY:	Solder Side ←			→ Parts Side	
BLACK	GND	A	1	GND	BLACK
BLACK	GND	B	2	GND	BLACK
RED	+5V DC	C	3	+5V DC	RED
RED	+5V DC	D	4	+5V DC	RED
BLUE	NOT USED	E	5	NOT USED	BLUE
ORANGE	+12V DC	F	6	+12V DC	ORANGE
	*KEY	H	7	*KEY	
WHITE/RED	COIN COUNTER 2	J	8	COIN COUNTER 1	WHITE/GREEN
	(EMPTY)	K	9	(EMPTY)	
RED/BLACK	SPEAKER	L	10	SPEAKER	RED/YELLOW
	(EMPTY)	M	11	(EMPTY)	
GREEN	VIDEO GREEN	N	12	VIDEO RED	RED
WHITE	VIDEO SYNC	P	13	VIDEO BLUE	BLUE
WHITE/ORANGE	SERVICE SW	R	14	VIDEO GROUND	BLACK
BLACK/WHITE	(EMPTY)	S	15	(EMPTY)	WHITE/BROWN
BROWN/BLACK	COIN 2	T	16	COIN 1	YELLOW/BLACK
RED/WHITE	2P START	U	17	1P START	RED
BLUE/WHITE	2P UP	V	18	1P UP	BLUE
GREEN/WHITE	2P DOWN	W	19	1P DOWN	GREEN
ORANGE/WHITE	2P LEFT	X	20	1P LEFT	ORANGE
YELLOW/WHITE	2P RIGHT	Y	21	1P RIGHT	YELLOW
BROWN/WHITE	2P ATTACK	Z	22	1P ATTACK	BROWN
VIOLET/WHITE	2P JUMP	a	23	1P JUMP	VIOLET
GRAY/WHITE	NOT USED	b	24	NOT USED	GRAY
	NOT USED	c	25	NOT USED	
	NOT USED	d	26	NOT USED	
BLACK	GND	e	27	GND	BLACK
BLACK	GND	f	28	GND	BLACK

(BASE COLOR/LINE COLOR)

MONITOR INFORMATION

SERVICE INSTRUCTIONS

NOTE: All monitors are equipped with automatic degaussing coils (L701) which demagnetize the picture tube every time the monitor is turned on after being off for a minimum of 5 minutes. Should any part of the chassis become magnetized it will be necessary to degauss the affected area with a manual degaussing coil. Move the coil slowly around the CRT face and all surrounding metal parts. Then slowly withdraw for a distance of 6 feet before turning off.

1.0 BLACK LEVEL CONTROL ADJUSTMENT

This control has been set at the factory and should not need further attention, however, when the game is connected a slight adjustment of VR201 may be necessary to obtain the proper black level (the black portion of the picture just extinguished).

2.0 VERTICAL SIZE (HEIGHT)

Location of this control is shown in Fig. 1. This control must be adjusted slowly, if necessary, until the picture or test pattern attains the correct vertical proportions.

3.0 CIRCUIT PROTECTION

A 4.0A pigtail fuse, mounted on the Main Board has been provided to protect the Power Output Circuit.

4.0 FOCUS

Adjust the focus control, located on the HV unit (T352), for maximum over-all definition and fine picture detail.

5.0 HORIZONTAL HOLD CONTROL ADJUSTMENT, VR351 (See Fig. 1)

A warm-up period of at least five minutes should be allowed before alignment is carried out. With the monitor being driven from the game signal, short TP601 to TP31. Adjust VR351 until the picture stops sliding horizontally. Remove the short.

6.0 HORIZONTAL VIDEO POSITION

If the video is off center on the raster some compensation can be made by adjusting this control.

7.0 VERTICAL RASTER POSITION ADJUSTMENT

If the video is off center vertically, (short dimension of picture tube) some compensation can be made by moving the vertical raster position adjustment jumper to either positions "U" or "D".

8.0 HORIZONTAL RASTER POSITION ADJUSTMENT

If the video is off center horizontally (long dimension of the picture tube) some compensation can be made by moving the horizontal raster position adjustment jumper to either positions "R" or "L".

9.0 HORIZONTAL WIDTH ADJUSTMENT

The horizontal width coil is a hexagonal tuning tool adjustment. This control must be adjusted slowly, if necessary, until the picture or test pattern attains the correct horizontal proportions.

* KONAMI GAMES ARE ALL NEGATIVE COMPOSIT SYNC. USE THE THREE PIN CONNECTOR ON THE MONITOR.

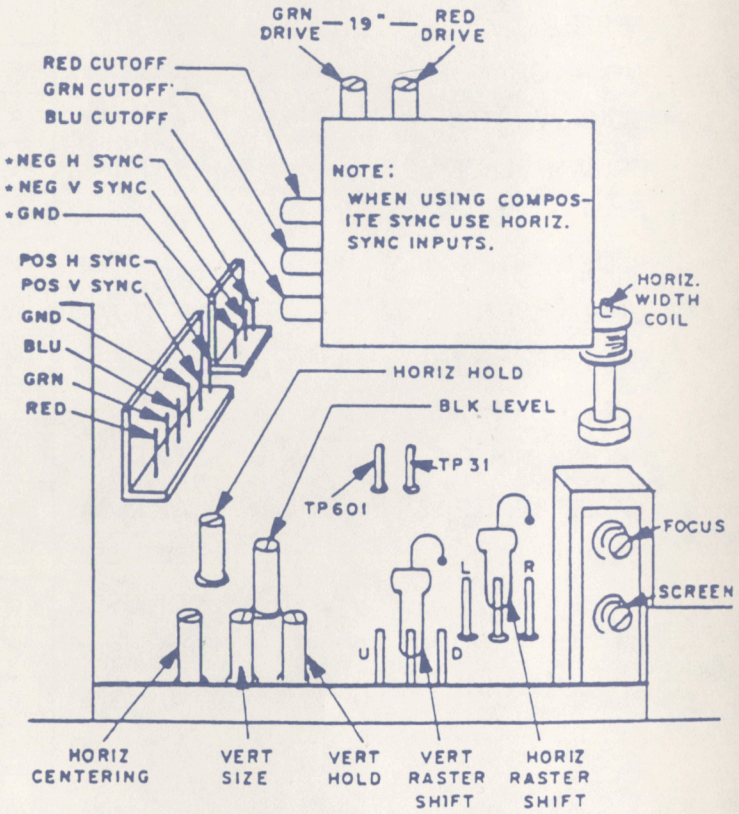

FIGURE 1

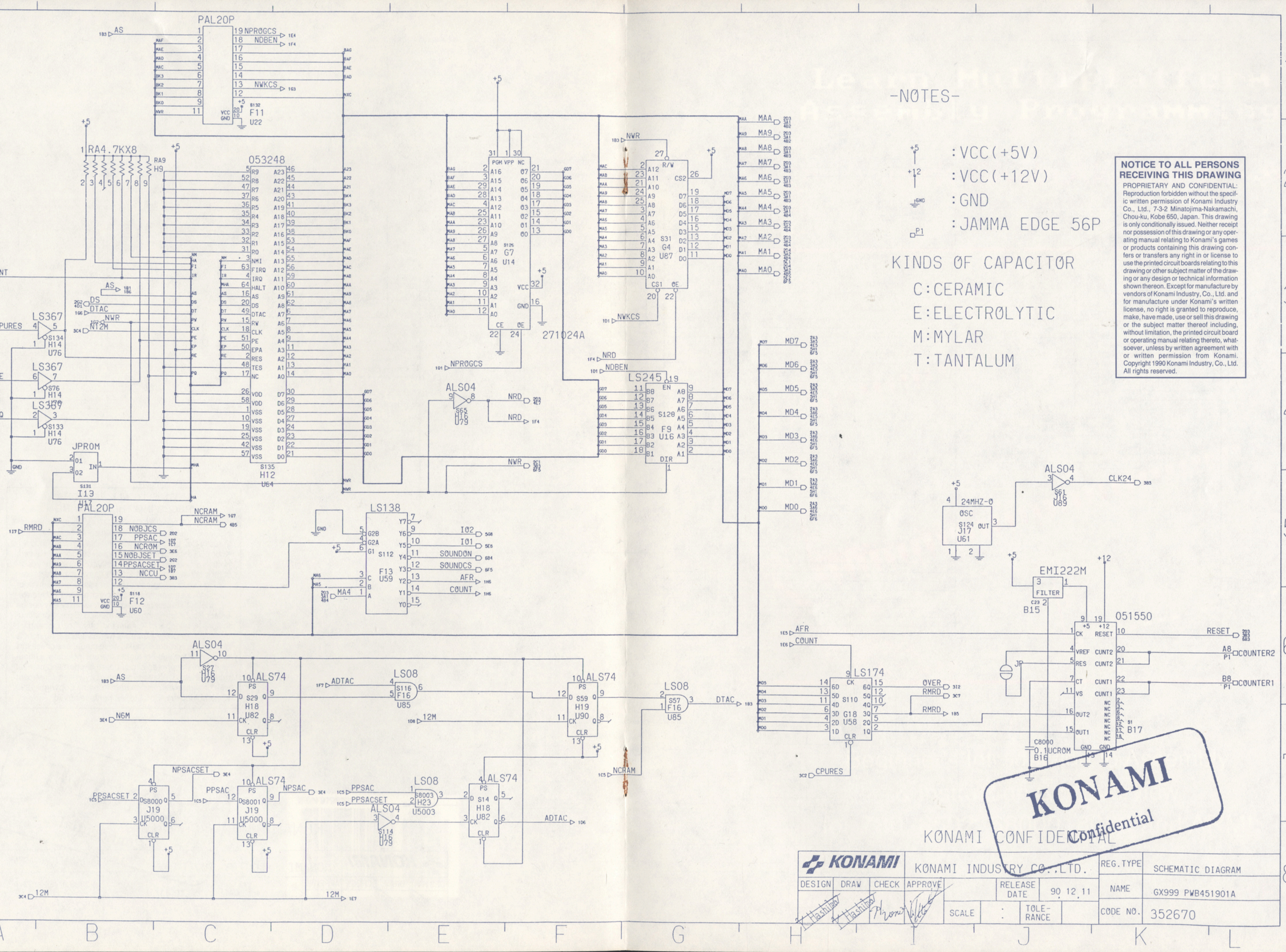

-NØTES-

+5 : VCC(+5V)

+12 : VCC(+12V)

GND : GND

P1 : JAMMA EDGE 56P

KINDS ØF CAPACITØR

C:CERAMIC

E:ELECTRØLYTIC

M:MYLAR

T:TANTALUM

NOTICE TO ALL PERSONS RECEIVING THIS DRAWING

PROPRIETARY AND CONFIDENTIAL: Reproduction forbidden without the specific written permission of Konami Industry Co., Ltd., 7-3-2 Minatojima-Nakamachi, Chou-ku, Kobe 650, Japan. This drawing is only conditionally issued. Neither receipt nor possession of this drawing or any operating manual relating to Konami's games or products containing this drawing confers or transfers any right in or license to use the printed circuit boards relating to this drawing or other subject matter of the drawing or any design or technical information shown thereon. Except for manufacture by vendors of Konami Industry, Co., Ltd. and for manufacture under Konami's written license, no right is granted to reproduce, make, have made, use or sell this drawing or the subject matter thereof including, without limitation, the printed circuit board or operating manual relating thereto, whatsoever, unless by written agreement with or written permission from Konami Industry, Co., Ltd. Copyright 1990 Konami Industry, Co., Ltd. All rights reserved.

KØNAMI CØNFIDENTIAL

KONAMI Confidential

KONAMI	KØNAMI INDUSTRY CØ.,LTD.				REG.TYPE	SCHEMATIC DIAGRAM	
DESIGN	DRAW	CHECK	APPROVE	RELEASE DATE	90.12.11	NAME	GX999 PWB451901A
Hashimoto	Hashimoto	Monma	Kato	SCALE	:	TØLERANCE	CØDE NØ. 352670

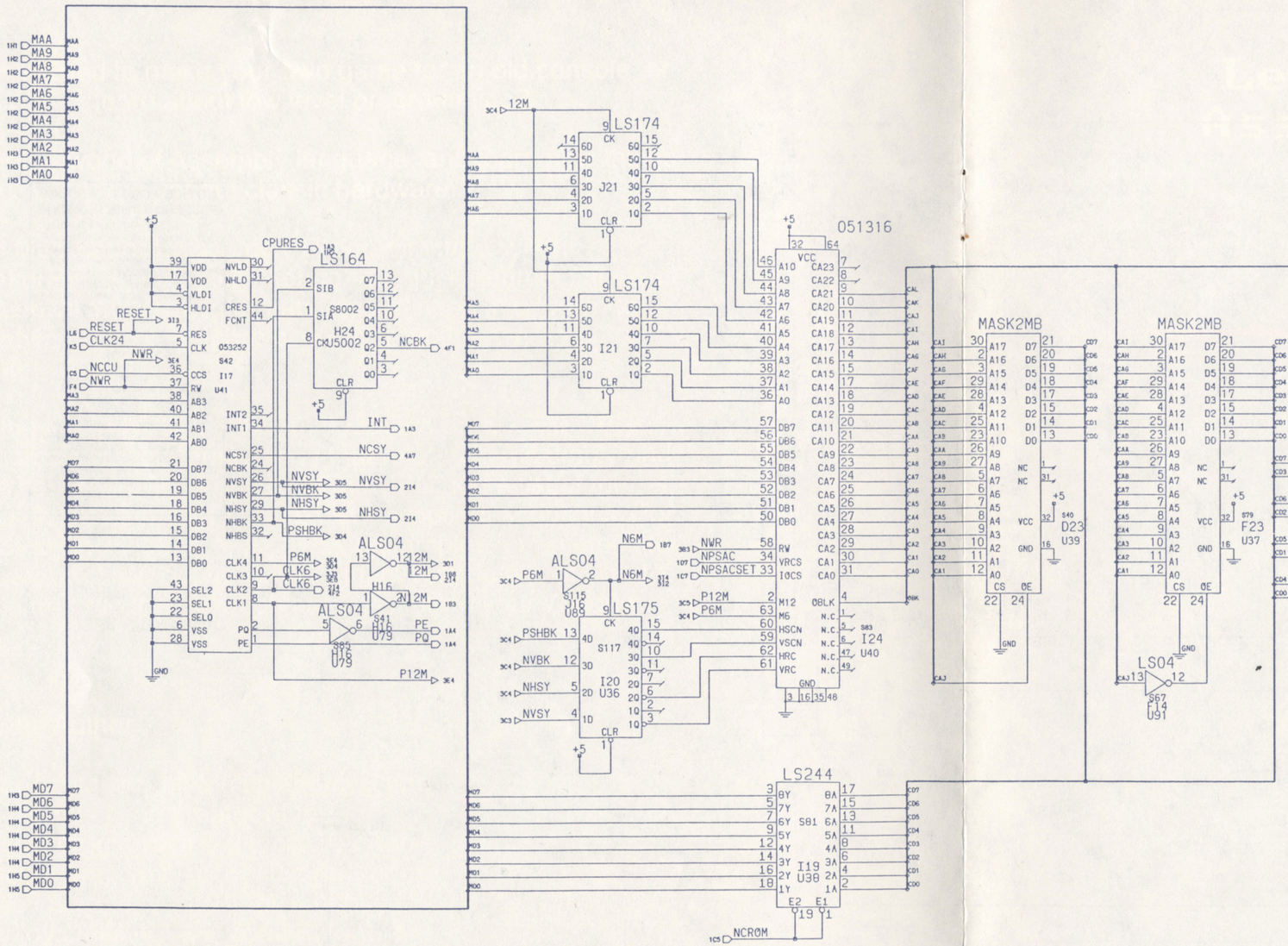

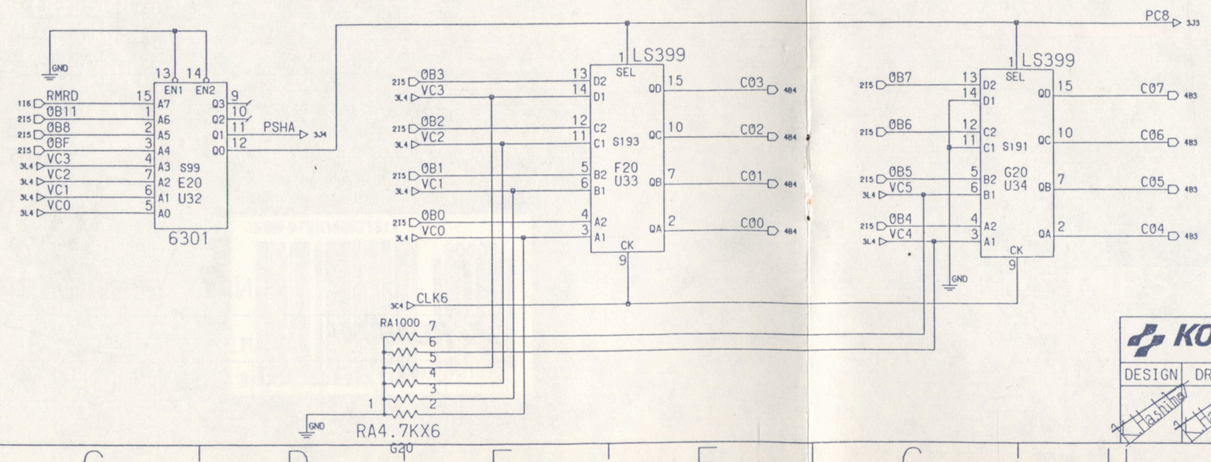

NOTICE TO ALL PERSONS RECEIVING THIS DRAWING

PROPRIETARY AND CONFIDENTIAL: Reproduction forbidden without the specific written permission of Konami Industry Co., Ltd., 7-3-2 Minatojima-Nakamachi, Chou-ku, Kobe 650, Japan. This drawing is only conditionally issued. Neither receipt nor possession of this drawing or any operating manual relating to Konami's games or products containing this drawing confers or transfers any right in or license to use the printed circuit boards relating to this drawing or other subject matter of the drawing or any design or technical information shown thereon. Except for manufacture by vendors of Konami Industry, Co., Ltd. and for manufacture under Konami's written license, no right is granted to reproduce, make, have made, use or sell this drawing or the subject matter thereof including, without limitation, the printed circuit board or operating manual relating thereto, whatsoever, unless by written agreement with or written permission from Konami. Copyright 1990 Konami Industry, Co., Ltd. All rights reserved.

KONAMI
Confidential
KONAMI CONFIDENTIAL

KONAMI	KONAMI INDUSTRY CO.,LTD.					REG.TYPE	SCHEMATIC DIAGRAM
DESIGN	DRAW	CHECK	APPROVE		RELEASE DATE	90.12 11	NAME	GX999 PWB451901A
K.Hashimoto	K.Hashimoto			SCALE	:	TOLE-RANCE	CODE NO.	352670

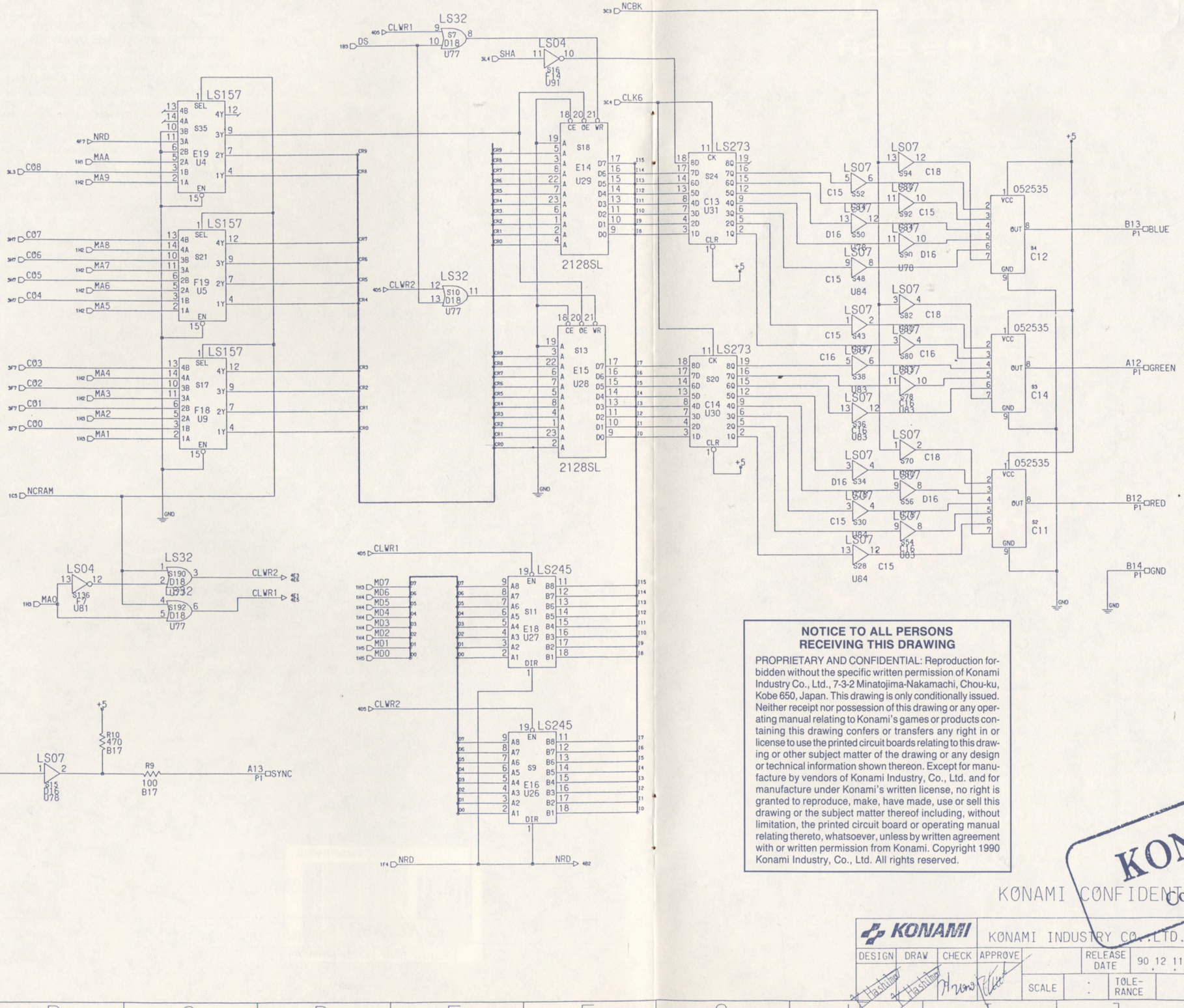

NOTICE TO ALL PERSONS RECEIVING THIS DRAWING

PROPRIETARY AND CONFIDENTIAL: Reproduction forbidden without the specific written permission of Konami Industry Co., Ltd., 7-3-2 Minatojima-Nakamachi, Chou-ku, Kobe 650, Japan. This drawing is only conditionally issued. Neither receipt nor possession of this drawing or any operating manual relating to Konami's games or products containing this drawing confers or transfers any right in or license to use the printed circuit boards relating to this drawing or other subject matter of the drawing or any design or technical information shown thereon. Except for manufacture by vendors of Konami Industry, Co., Ltd. and for manufacture under Konami's written license, no right is granted to reproduce, make, have made, use or sell this drawing or the subject matter thereof including, without limitation, the printed circuit board or operating manual relating thereto, whatsoever, unless by written agreement with or written permission from Konami. Copyright 1990 Konami Industry, Co., Ltd. All rights reserved.

KONAMI Confidential

KONAMI CONFIDENTIAL

KONAMI	KONAMI INDUSTRY CO.,LTD.				REG.TYPE	SCHEMATIC DIAGRAM
DESIGN	DRAW	CHECK	APPROVE	RELEASE DATE 90.12.11	NAME	GX999 PWB451901A
K.Hashino	K.Hashino			SCALE : TOLERANCE	CODE NO.	352670

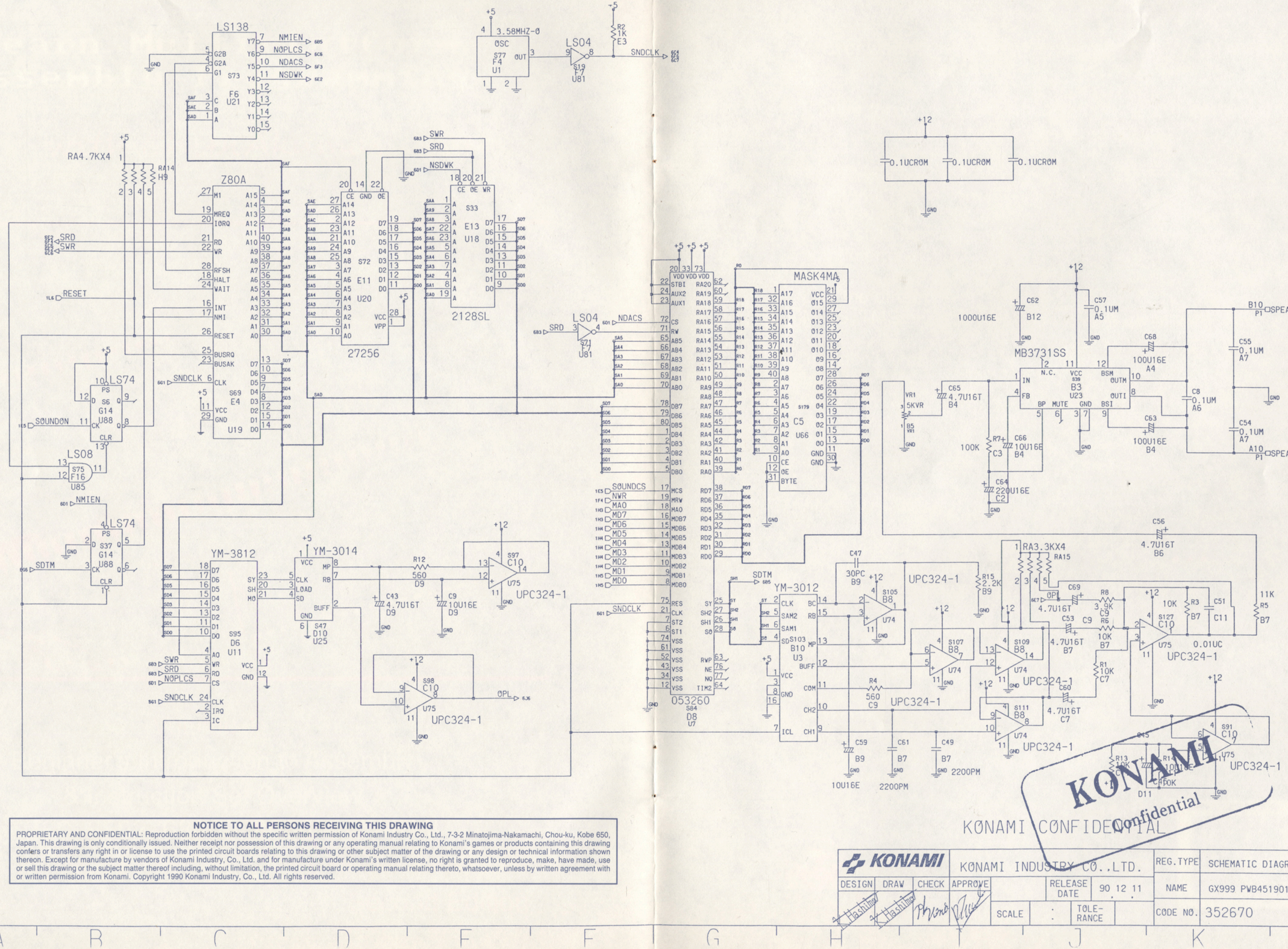

NOTICE TO ALL PERSONS RECEIVING THIS DRAWING

PROPRIETARY AND CONFIDENTIAL: Reproduction forbidden without the specific written permission of Konami Industry Co., Ltd., 7-3-2 Minatojima-Nakamachi, Chou-ku, Kobe 650, Japan. This drawing is only conditionally issued. Neither receipt nor possession of this drawing or any operating manual relating to Konami's games or products containing this drawing confers or transfers any right in or license to use the printed circuit boards relating to this drawing or other subject matter of the drawing or any design or technical information shown thereon. Except for manufacture by vendors of Konami Industry, Co., Ltd. and for manufacture under Konami's written license, no right is granted to reproduce, make, have made, use or sell this drawing or the subject matter thereof including, without limitation, the printed circuit board or operating manual relating thereto, whatsoever, unless by written agreement with or written permission from Konami. Copyright 1990 Konami Industry, Co., Ltd. All rights reserved.

KØNAMI CØNFIDENTIAL

KONAMI	KØNAMI INDUSTRY CO..LTD.				REG.TYPE	SCHEMATIC DIAGRAM	
DESIGN	DRAW	CHECK	APPROVE		NAME	GX999 PWB451901A	
K.Hashimoto	K.Hashimoto			RELEASE DATE 90 12 11			
				SCALE : TØLE-RANCE	CØDE NØ.	352670	

CONTROL PANEL DRILLING TEMPLATE

Use this Template for Player 1 and Player 2 Controls

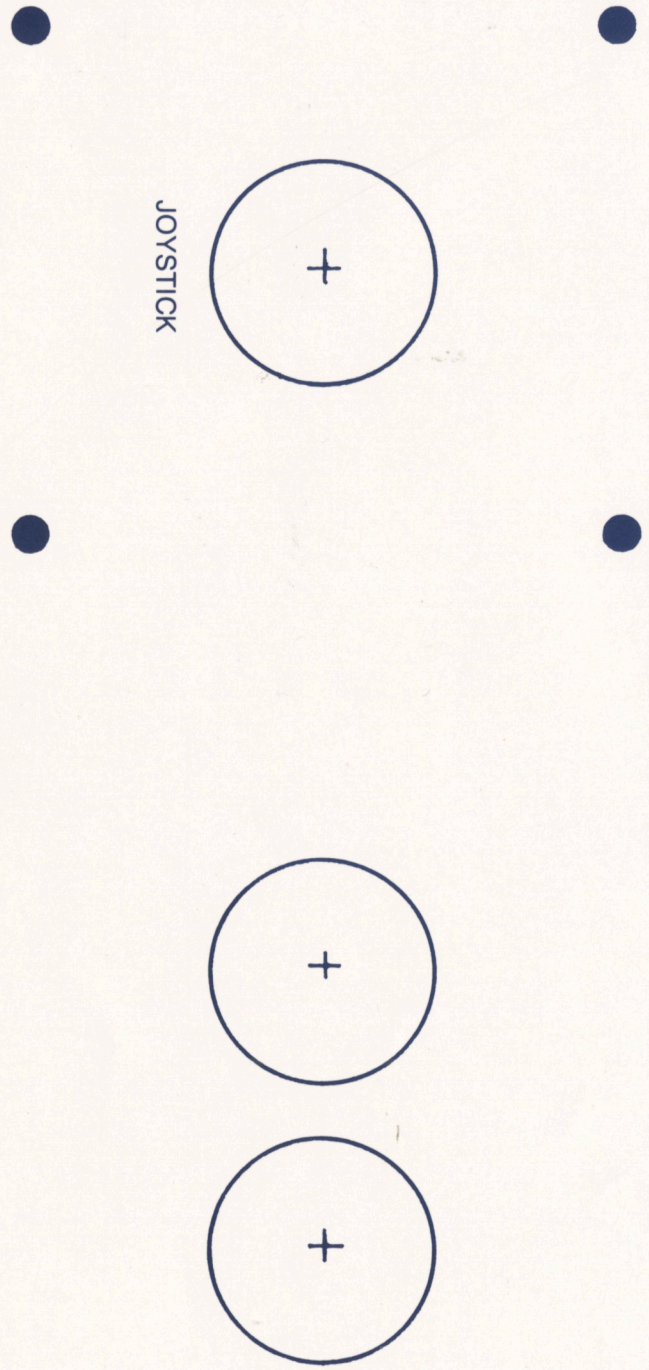

USER INFORMATION

WARNING

F.C.C. REGULATION COMPLIANCE

THIS KIT IS INTENDED FOR USE ONLY ON COIN-OPERATED VIDEO GAMES MANUFACTURED AFTER OCTOBER 1, 1983 WHICH HAVE BEEN VERIFIED FOR COMPLIANCE WITH REQUIREMENTS IN PART 15 OF F.C.C. RULES FOR A CLASS A COMPUTING DEVICE.

IMPROPER CONNECTION OF THIS KIT OR CONNECTION TO ANY OTHER GAME NOT SO MANUFACTURED OR VERIFIED FOR COMPLIANCE MAY CAUSE UNACCEPTABLE INTERFERENCE TO RADIO AND T.V. RECEPTION, REQUIRING THE OPERATOR TO TAKE WHATEVER STEPS ARE NECESSARY TO CORRECT THE INTERFERENCE.

THE P.C. BOARD CAGE SUPPLIED WITH THIS CONVERSION KIT MUST BE UTILIZED AND TERMINATED TO GROUND AT THE TIME OF INSTALLATION.



900 Deerfield Parkway, Buffalo Grove, 60089-4510
Telephone: (708) 215-5100, Telex: 6871385 KONAM UW, Fax: (708) 215-5122