Nintendo-Pak™



NINTENDO-PAK™ INSTALLATION & OPERATION MANUAL

FOR DONKEY KONG JUNIOR™ DONKEY KONG™ POPEYE*

Nintendo®

©1983 Nintendo® of America Inc.

* © 1982 King Features Syndicate

WARNING

This instruction manual is for use only by authorized distributors of Nintendo of America Inc., coin operated video arcade games who have been licensed to install replacement parts and components in Nintendo arcade games pursuant to Nintendo-Pak™ license agreements.

WARNING

If the replacement parts and components in this Nintendo-Pak™ are not installed exactly as instructed herein, there may be radio frequency interference created in violation of F.C.C. class A standards.

WARNING

This equipment generates, uses, and can radiate radio frequency energy, and if not installed and used in accordance with the instruction manual, may cause interference to radio communications. It has been tested and found to comply with the limits for a class A computing device pursuant to subpart J of part 15 of F.C.C. rules, which are designed to provide reasonable protection against such interference when operated in a commercial environment. Operation of this equipment in a residential area is likely to cause interference; in which case, the user at his own expense will be required to take whatever measures may be required to correct the interference.

WARNING

Use of non-Nintendo parts or modifications to your Nintendo-Pak™ parts and components may adversely affect the safety of your game, and may cause injury to your players.

TABLE OF CONTENTS

I.	Introduction	3
II.	Contents of **Nintendo-Pak™**	4-5
III.	List of Tools Needed	6
IV.	Replacement Process Step-by-Step	7-22
V.	Final Check Sheet and Adjustments	23-31
VI.	Donkey Kong 3 Wiring Diagram	32-33
VII.	Service Bulletins	34-40
VIII.	CPU P.C., VIDEO P.C., and Power Supply Schematics	41-43
IX.	Reorder Parts Lists	44-55

I. INTRODUCTION

Nintendo-Pak™

NINTENDO-PAK™ enables you to replace Donkey Kong*, Donkey Kong Jr.* or Popeye** with Donkey Kong 3* in less than one hour.

Before you begin, be sure you are properly prepared. Make certain you have selected the right **NINTENDO-PAK™** for the particular game you are replacing. Next, thoroughly read this instruction manual to familiarize yourself with the proper procedures. Make certain that you have all the tools necessary to complete the process.

If you have any questions, please call Nintendo Service at 1-(800)-633-3236.

* Donkey Kong, Donkey Kong Jr., Donkey Kong 3 and Nintendo-Pak are trademarks of Nintendo of America Inc.

** A trademark of King Features Syndicate, Inc.

Contents of Nintendo-Pak

Parts Name	Quantity	Remarks
Pak (A) Basic Pak		
DKC1 Complete P.C. Board	1	
C-DKC-US Complete Operation Panel Assembly	1	with harness
DKC-US Plate 600W	1	
DKC-US Screen 600W	1	
DKC-US Side Decal	2	
Nintendo-Pak™ Manual	1	
Pak (B) Donkey Kong and Donkey Kong Jr.		
FCC Shield Cage	1	
051 Shield Cage Cover Complete Assembly	1	with FCC Harness
Serial Number Plate	1	
DKC-UP Back Door Adjustment Label	1	with double back tape
FCC Class A Label	1	
C-UP44P-044 Edge Connecting Main Harness	1	
Ground Cable E	1	
Machine Screw with Washer M4 X 10	6	
Round Head Wood Screw 3.5 x 13	13	
Sticker Tie Down	2	
Cable Tie	2	
FBI STICKER	1	
Authorized Donkey Kong 3 sticker	1	

II. Contents of Nintendo-Pak (Cont'd.)

Parts Name	Quantity	Remarks
Pak (C) Popeye		
821B-7B Power Assembly	1	TKGU-08-01 DJRU-19-01
051 Shield Cage Cover Complete Assembly	1	with FCC harness
Serial Number Plate	1	
DKC-UP Back Door Adjustment Label	1	with double back tape
Video Monitor Mounting Bracket (Upper)	1	
Video Monitor Mounting Bracket (Lower)	1	
Video Monitor L Bracket	2	
9P-030 Power Harness	1	
12P-030 Power Harness	1	
Blind Cardboard (Large)	1	with double back tape
Blind Cardboard (Small)	1	with double back tape
Fuse 5A 125V	2	
Fuse 4A 125V	1	
5A Fuse Label	1	
Machine Screw with Washer M5 X 30	3	
M5 Washer (Large)	5	
Hex Nut with Washer M5	3	
Carriage Bolt M6 X 30	4	
Hex Nut with Washer M6	4	
Machine Screw with Washer M5 X 16	2	
Round Head Wood Screw 3.5 X 13	4	
FBI Sticker	1	
Authorized Donkey Kong 3 Sticker	1	
Hole Template	1	

III. List of Tools Needed

Flat (standard) screwdriver

Phillips screwdriver

7mm nut driver

8mm nut driver

10mm nut driver

¼" or 6.5mm drill bit

15/64 or 5.5mm drill bit

Electric reversing drill

Phillips bit (for drill)

Staple gun

Paper stapler

Lacquer thinner

Denatured alcohol or other cleaner

Note: Many steps require the use of a phillips screwdriver and having a phillips screwdriver bit for your drill will greatly speed up these steps.

IV. Step-by-step instructions

1. Exchange marquee/header (see illustration 1-1)

   A. Remove four (4) top trim screws
   B. Exchange marquee plexiglass
   C. Replace top trim and four (4) top trim screws

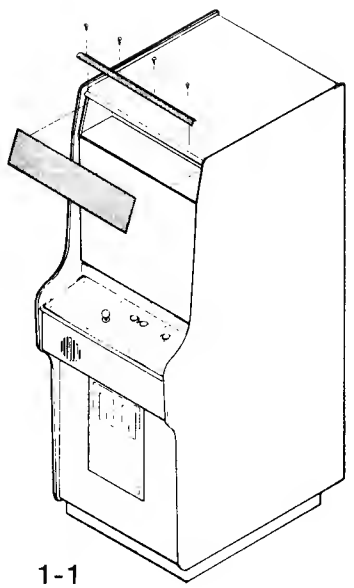

1-1

2. Remove old control panel and front screen (see illustration 1-2)

   A. Undo control panel holddown clamps
   B. Disconnect harness and remove control panel
   C. Remove front screen by sliding back front screen clamp (access from back door)

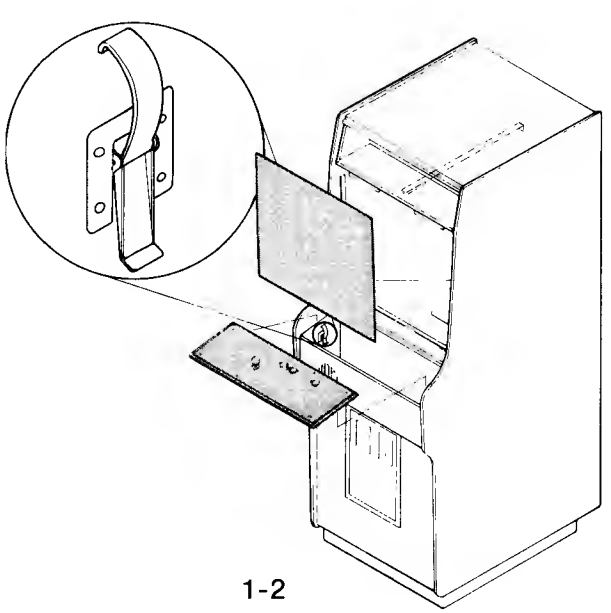

1-2

These steps are for Donkey Kong and Donkey Kong Junior ONLY.
Note: If replacing Popeye, proceed to step 6.

3. Remove instruction label (see illustration 1-3)
   Note: For Donkey Kong, Donkey Kong Jr. ONLY

   A. Spray label with lacquer thinner
   B. Wait 15 minutes and remove with putty knife
   C. Clean area with cloth and lacquer thinner

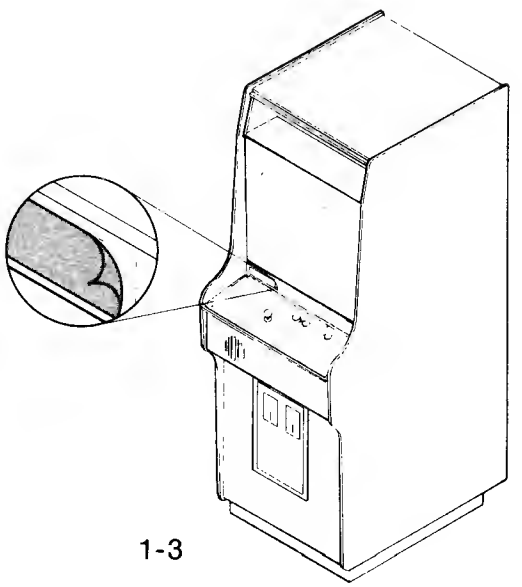

1-3

4. Replace side decal (see illustration 1-4)
   Note: For Donkey Kong and Donkey Kong Junior only

   A. Remove all carriage bolts.
   B. Remove old decals.

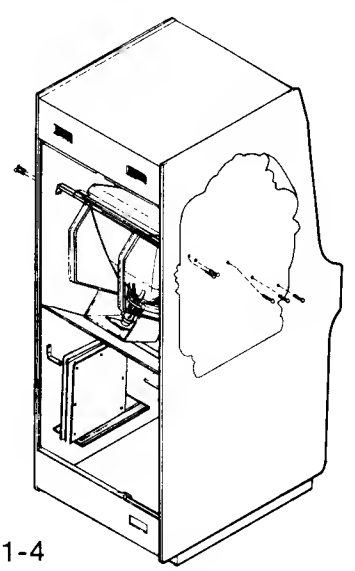

1-4

These steps are for Donkey Kong and Donkey Kong Junior ONLY.

C. Clean side panel with alcohol and install new Donkey Kong 3 side decal.
Note: Decal is placed 2-1/2 inches from top and in center of side panel.
(See illustration 1-5)
SEE DECAL APPLICATION SHEET, PAGE 22.

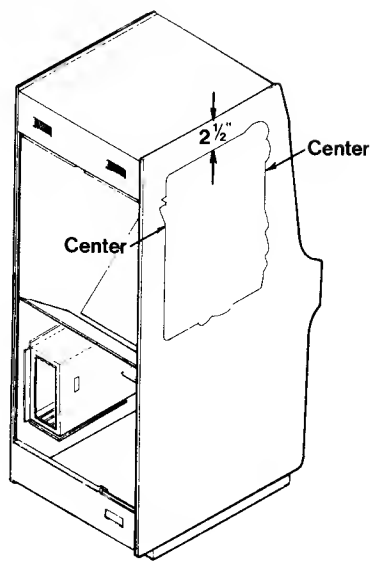

1-5

D. Replace all carriage bolts. (See illustration 1-6)
IMPORTANT: Be sure that monitor ground wire is connected to one of the locations shown.

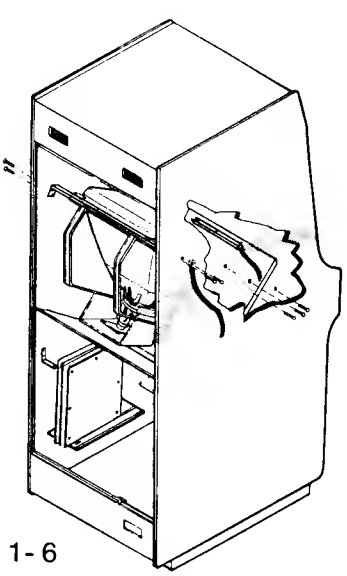
1-6

These steps are for Donkey Kong and Donkey Kong Jr. ONLY

5. Installation of FCC shield cage (see illustration 1-7)

   A. Unscrew wing nuts and remove P.C. Board assembly and all wire harnesses **EXCEPT** three (3) harness connections to coin door (2 pin counter, 3 pin coin, 5 pin service)
   B. Remove P.C. Board mounting brackets

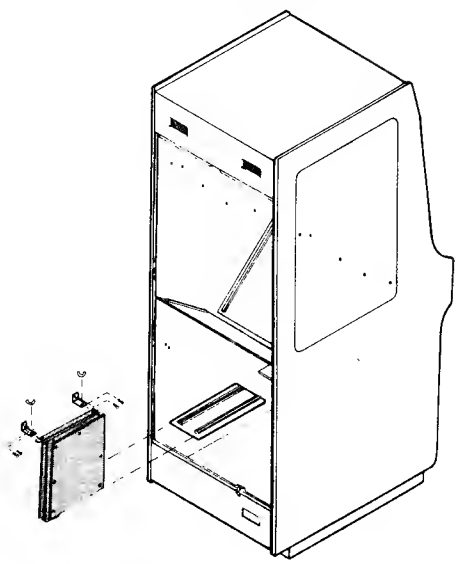

1-7

   C. If P.C. Board wood shelf has slots made from square stock wood, remove these (see illustration 1-8)

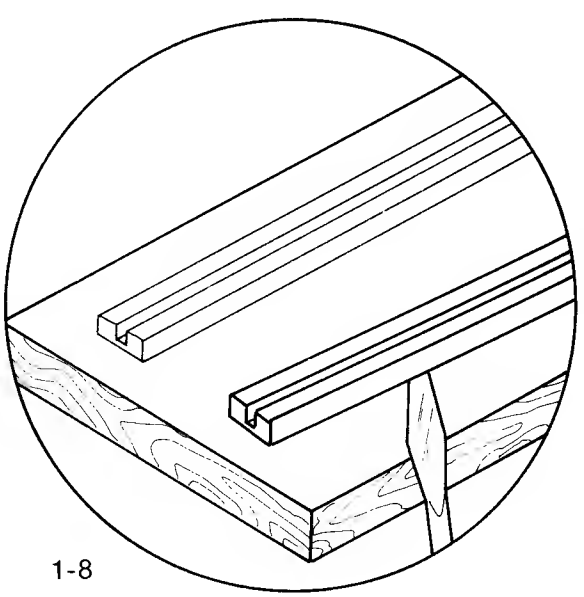

1-8

These steps are for Donkey Kong and Donkey Kong Jr. ONLY

D. Install new FCC shield cage so it is flush with rear of wood shelf and fasten with nine (9) screws provided. **IMPORTANT! On lower left corner install ground harness and connect the other end to the mounting bolt on the power supply as shown.** (see illustration 1-9 & 1-10)

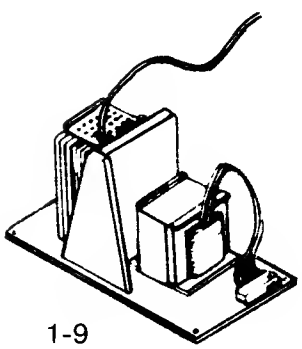

1-9

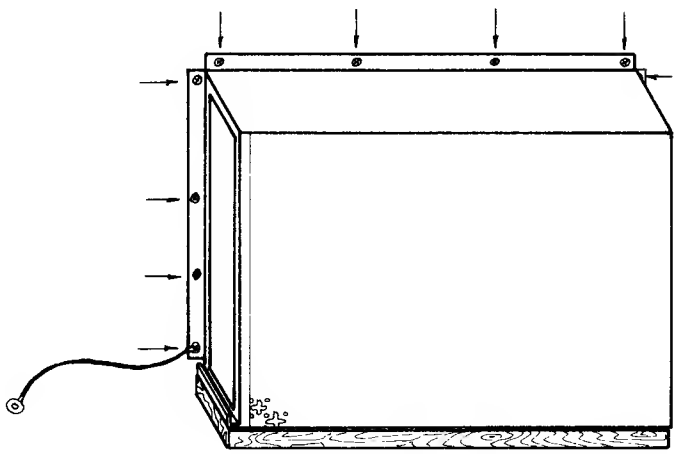

1-10

These steps are for Popeye ONLY

6. Replacement of side decal and vertical positioning of monitor (see illustration 2-1)

A. Remove both large and small blind cardboard.

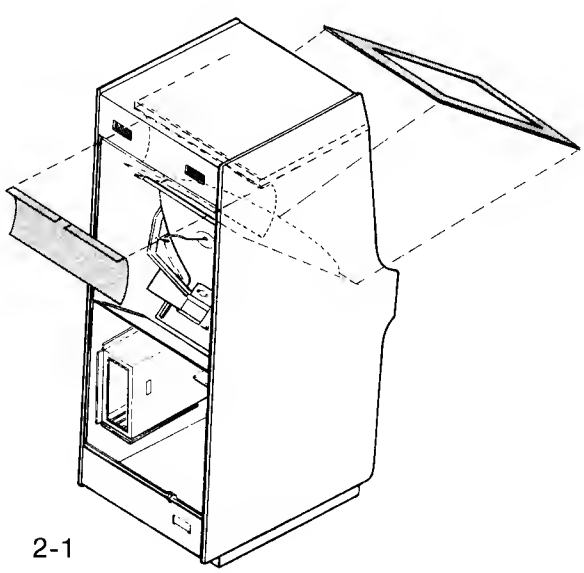

2-1

These steps are for Popeye ONLY.

B. Disconnect all monitor connections and mounting screws and remove monitor (see illustration 2-2).
Note: Monitor ground wire will be reconnected in Step K.
C. Remove all carriage bolts and monitor side panel supports (see illustration 2-2).
D. If your game does not have 5 holes in each side panel, use the template provided to drill upper two holes (see illustration 2-3).

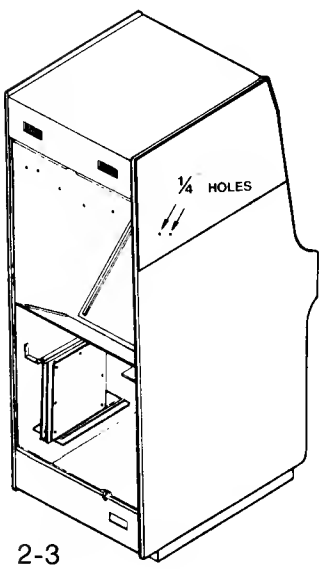

2-3

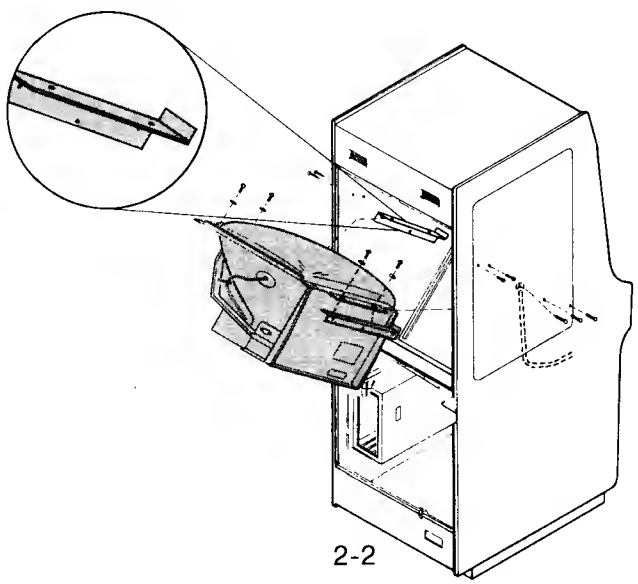
2-2

E. Remove old side decals and clean side panels with alcohol.
F. Install new side decals 2-1/2 inches from top and in center of side panel (see illustration 2-4).

SEE DECAL APPLICATION SHEET PAGE 22

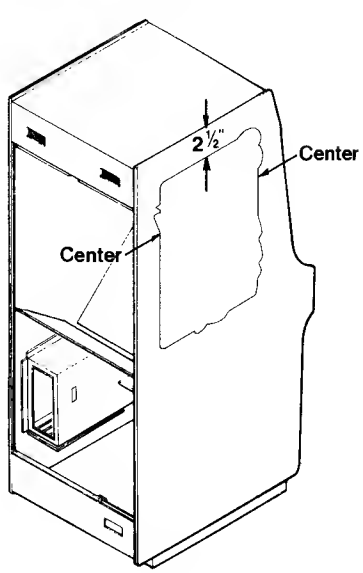

2-4

These steps are for Popeye ONLY

G. **IMPORTANT: Check to see if your game has the lower monitor support installed.** If it does, skip step H and proceed to step I (see illustration 2-5).

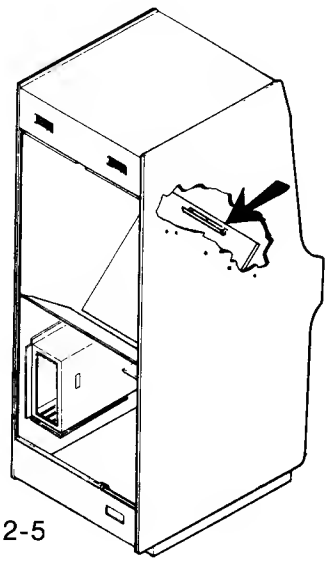

2-5

H. Install lower monitor support by drilling three (3) 15/64 (5.5m) holes and mounting support with three (3) M5 machine screws and cap nuts (see illustration 2-6).





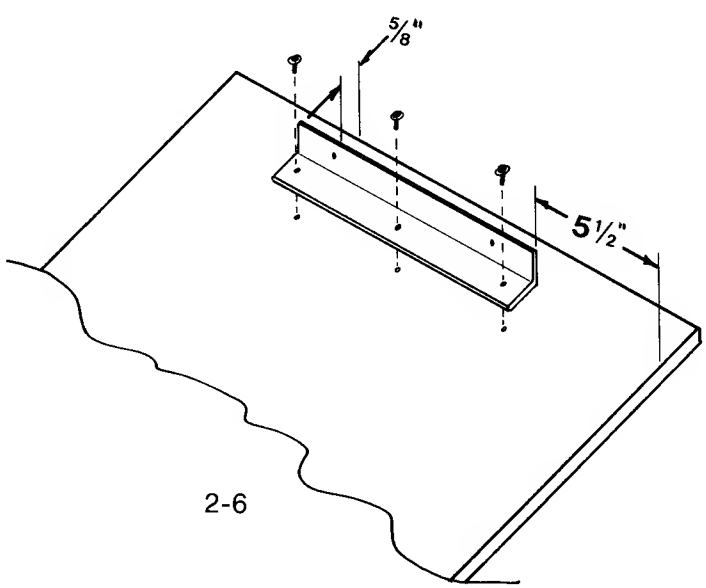

2-6

These steps are for Popeye ONLY

I. Place monitor back into game in vertical position.
Note: Monitor frame rests in front of lower monitor support (see illustration 2-7).

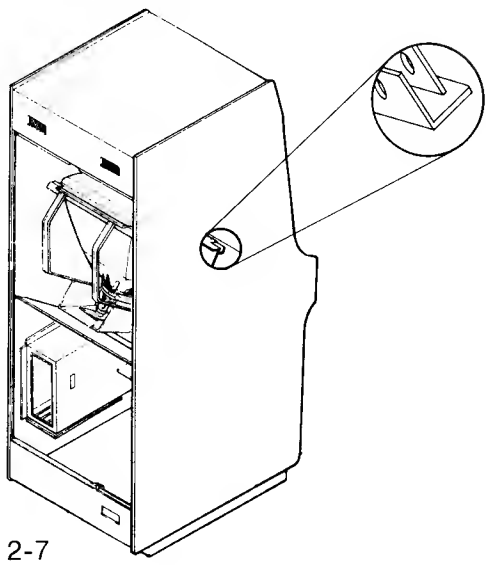

2-7

J. Install all side panel carriage bolts.
K. Install upper monitor support L brackets and monitor support bar. (Note: Monitor support bar provided in PAK AC.) **IMPORTANT: RECONNECT MONITOR GROUND IN POSITION SHOWN IN DETAIL** (see illustration 2-8).



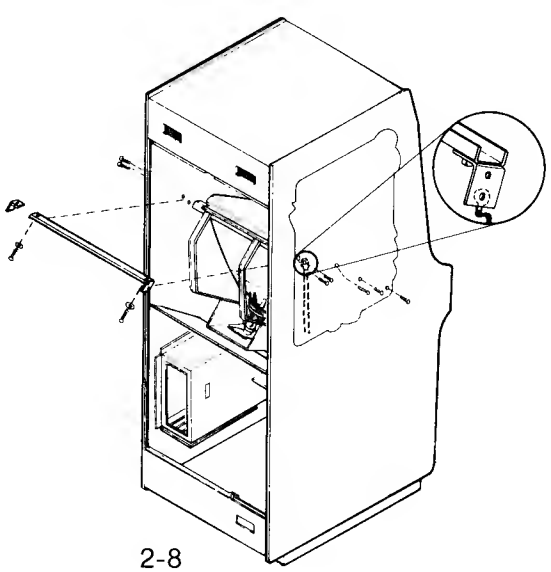

2-8

These steps are for Popeye ONLY

L. Install monitor mounting machine screws (see illustration 2-9).

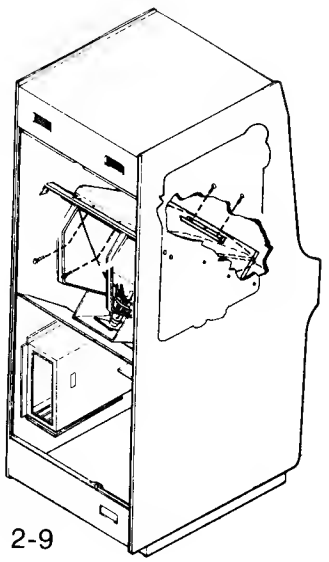

2-9

M. Install new small and large blind cardboard, being sure to staple where shown (see illustration 2-10).

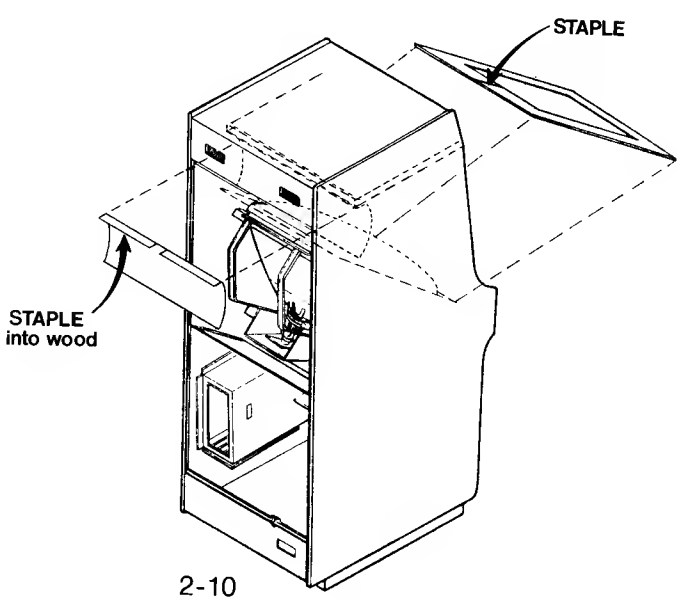

2-10

These steps are for Popeye ONLY

7. If you are replacing a Popeye game, remove old power supply transformer assembly (see illustration 2-11 & 2-12).

   A. Disconnect connector from switch plate
   B. Disconnect both plugs from monitor and lamp
   C. Disconnect ground harness connections
   D. Disconnect both power harness connections
   IMPORTANT: Take off old short harness connectors and replace with new short harness connectors provided. SEE DETAIL (illustration 2-11).
   E. Remove four (4) wing nuts and take out old power assembly.
   F. Replace with new Donkey Kong 3 power supply assembly and tighten wing nuts. **Note: Bolts for wing nuts may push through bottom of game during mounting of new power supply unit. If this happens, simply push them back up when power supply assembly is in place**
   G. Reconnect Steps A, B & C being careful to get a good connection on Step C. Ground harnesses.

8. Replace fuse with 5 AMP fuse and place 5 AMP fuse label in position shown (see illustration 2-11).

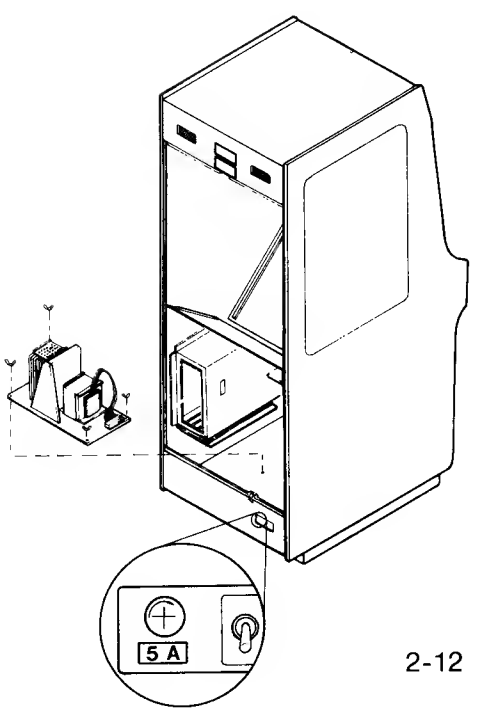

2-12

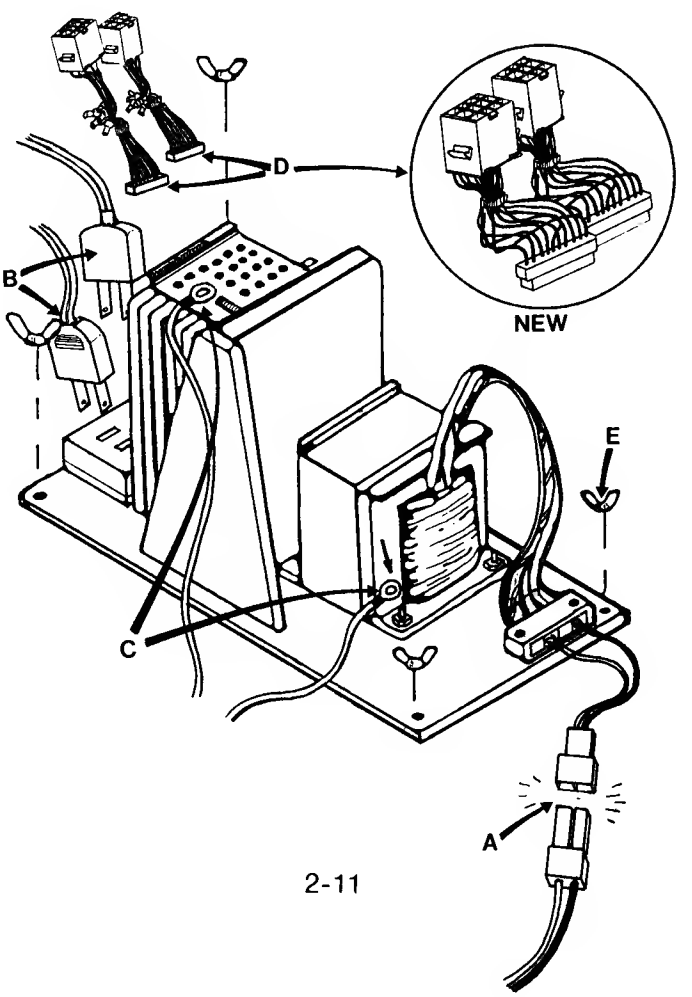

2-11

This step is for Popeye only.

9. Remove old Popeye P.C. Board and FCC cover assemble (see illustration 2-13).

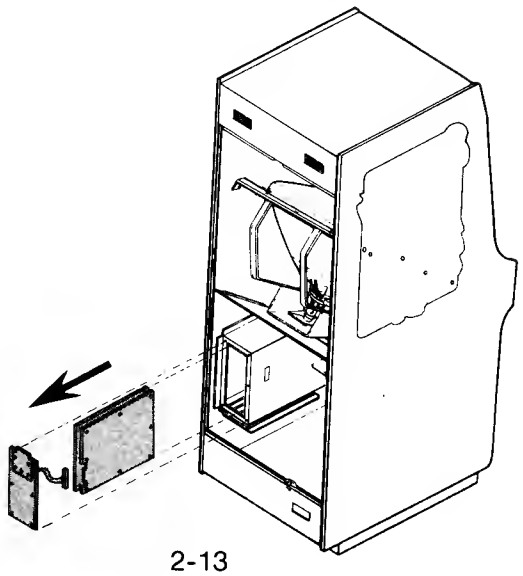

2-13

These are steps for Donkey Kong, Donkey Kong Junior and Popeye.

10. Install new Donkey Kong 3 P.C. Boards and new FCC cage cover assemble, and connect short harness to P.C. Board. **IMPORTANT: Do not screw on cover until final adjustments are completed** (see illustration 3-1).

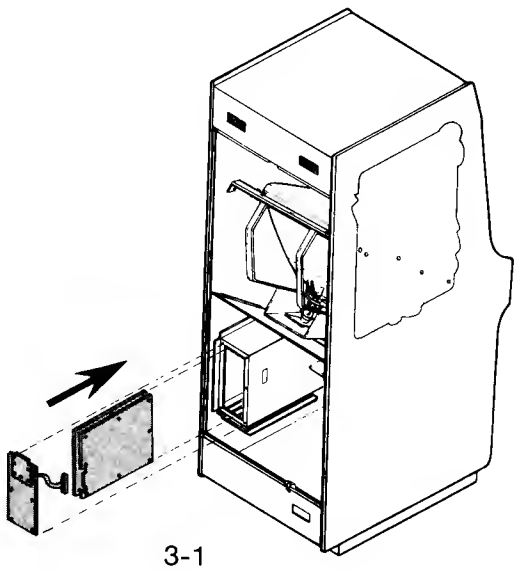

3-1

This step is for Popeye, Donkey Kong and Donkey Kong Jr.

11. Connect main harness assembly (see illustration 3-2)

Note: For Donkey Kong and Donkey Kong Junior, install new wire harness (steps A-G). For Popeye, reconnect old harness (steps D, E and G).

A. Connect 2 pin, 3 pin, 4 pin coin door harnesses to main harness (Note: Harnesses are different for Popeye, Donkey Kong, and Donkey Kong Jr.)
B. Fasten control panel connectors to wire tie approximately 5" from connectors
C. Route the main harness through existing wire ties and then install two (2) new stick-on ties to FCC shield cage to hold harness securely
D. Connect 4 pin sound and 6 pin video from monitor to main harness
E. Connect 9 pin and 10 pin power supply connectors
F. Fasten power supply harness to fCC shield cage with cable ties.
G. Connect 44-pin edge connector to FCC cover assemble.

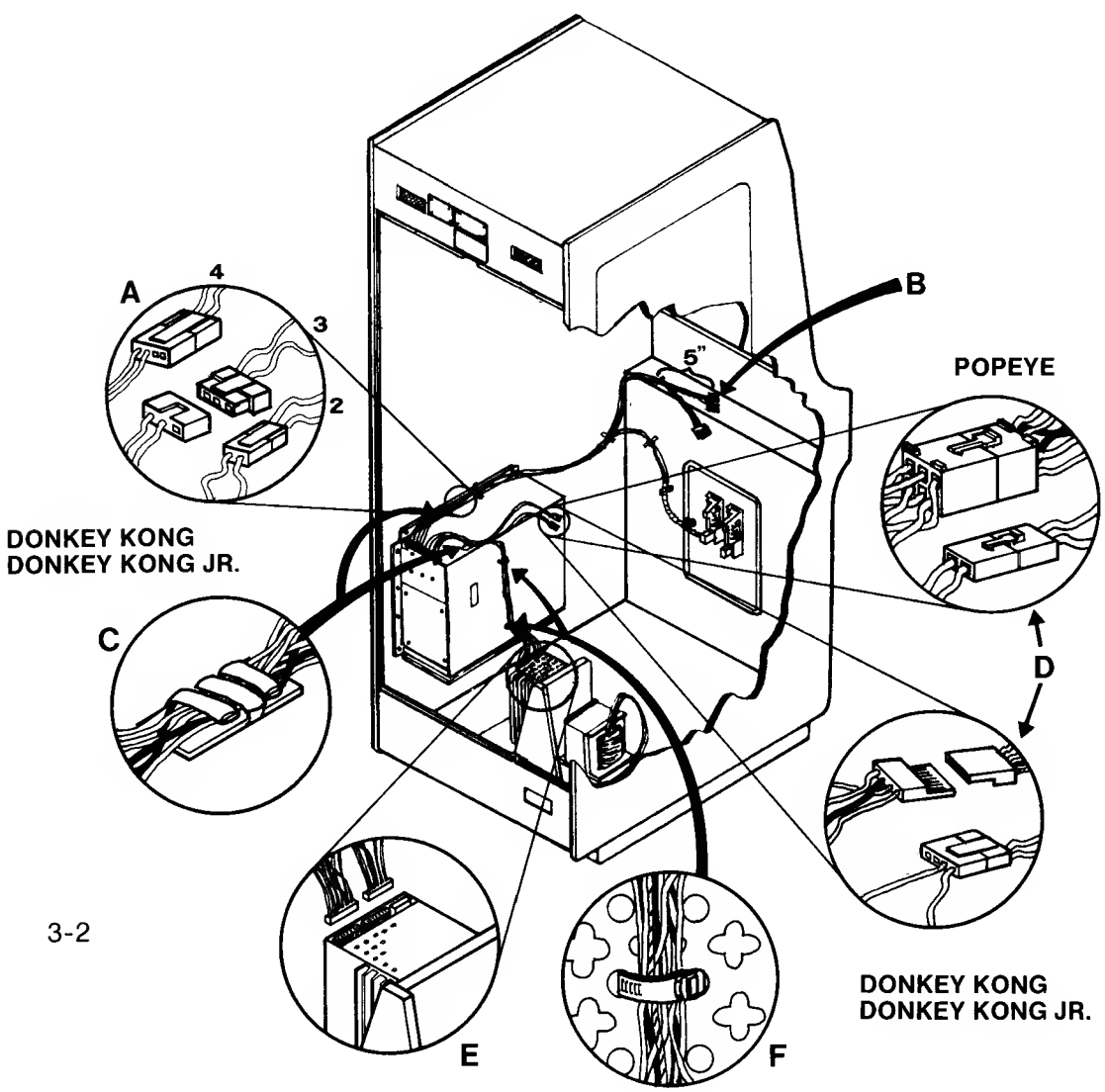

3-2

12. Connect new Donkey Kong 3 control panel to main harness and fasten down control panel (see illustration 3-3)

    Note: For Donkey Kong and Donkey Kong Jr., use white connector on main harness only.

13. Install new Donkey Kong 3 front screen and fasten with front screen clamp

    A. **IMPORTANT! Place authorized Donkey Kong 3 sticker on front screen in location shown** (see illustration 3-3)

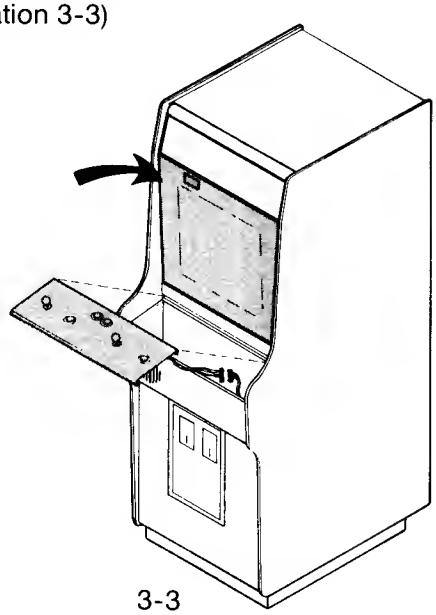

3-3

14. Screw on new serial number plate next to old plate. **IMPORTANT! Do not remove old plate** (see illustration 3-4)

    A. Use round head wood screw 3.5 x 3 provided.

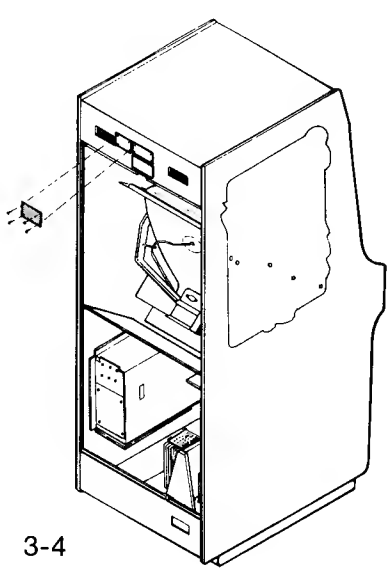

3-4

15. Attach FCC Class A label (see illustration 3-5)

A. Remove old FCC label
B. Put on new FCC label and staple all four corners

Note: This step in not necessary for Popeye.

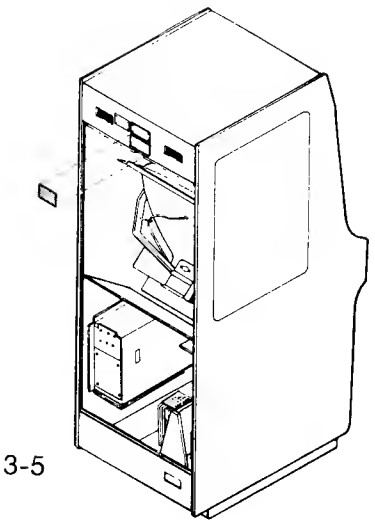

3-5

16. Attach FBI sticker

A. Place label on back door just under lock (see illustration 3-6)

B. Staple all four corners.

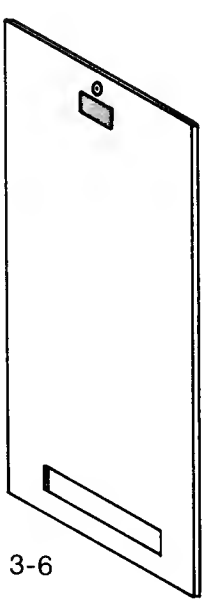

3-6

This step is for Donkey, Donkey Kong Jr., and Popeye.

17. Attach new back door adjustment label

    A. Peel off old label and replace with new Donkey Kong 3 label. Staple all four corners (see illustration 3-7)

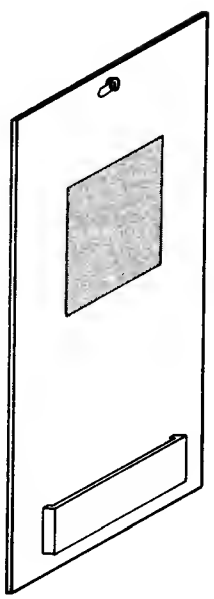

3-7

Side Decal Application

Step 1.

Start by peeling the protective backing "A" down about 6 inches from the top.

Place decal in desired position. Pull down slowly the remainder of the protective backing of "A."

While doing this, use a soft cloth to smooth decal onto side board, moving from top to bottom of decal.

Step 2.

Fold remaining decal back, exposing the unprinted side. Begin to peel protective backing "B" from center to right hand side "slowly."

Using soft cloth smooth decal onto side panel by running hand from top to bottom of decal, moving outward to the right hand side.

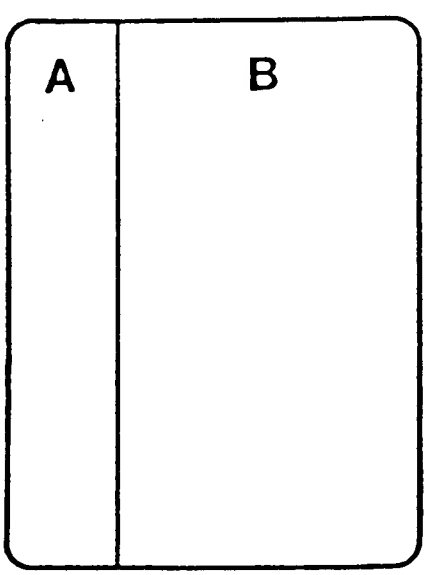

Front View

V. FINAL CHECK SHEET AND ADJUSTMENTS

- ☐ 1. Replacement label installed (MANDATORY)
- ☐ 2. FBI sticker installed (MANDATORY)
- ☐ 3. New serial number plate installed (MANDATORY)
- ☐ 4. New FCC label installed (MANDATORY)
- ☐ 5. New adjustment label installed
- ☐ 6. Fuse label changed (Popeye only)
- ☐ 7. P.C. Board adjustments made
  (see PC Board adjustments page 24-25)
- ☐ 8. Monitor adjustments made
  (see monitor adjustments pages 26-27)
- ☐ 9. Self test check (see pages 28-29)
- ☐ 10. Coins give credit
- ☐ 11. Controls on operational panel functioning
- ☐ 12. Sound checked

ADJUSTMENTS

After powering up the game, you may find that the horizontal width and vertical height need adjustment. To make adjustment to the horizontal width, refer to the illustration on page 26. To adjust the vertical height, use the V-size adjustment on the rear of the monitor to make the picture larger.

It may also be necessary to adjust the vertical and horizontal position controls on the video p.c. board as shown below to center the picture.

P.C. Board Adjustments

Adjustment of Semi-Fixed Resistors

VIDEO P.C. Board

Semi-fixed resistors, VR1 and VR2 on VIDEO P.C. Board are used to adjust video monitor screen.

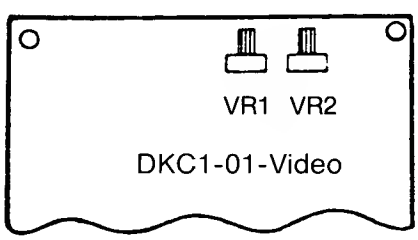

VIDEO P.C. Board

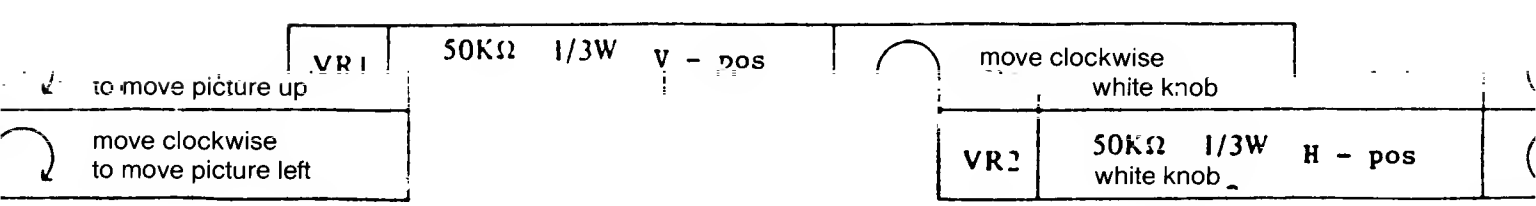

Option Switch Settings

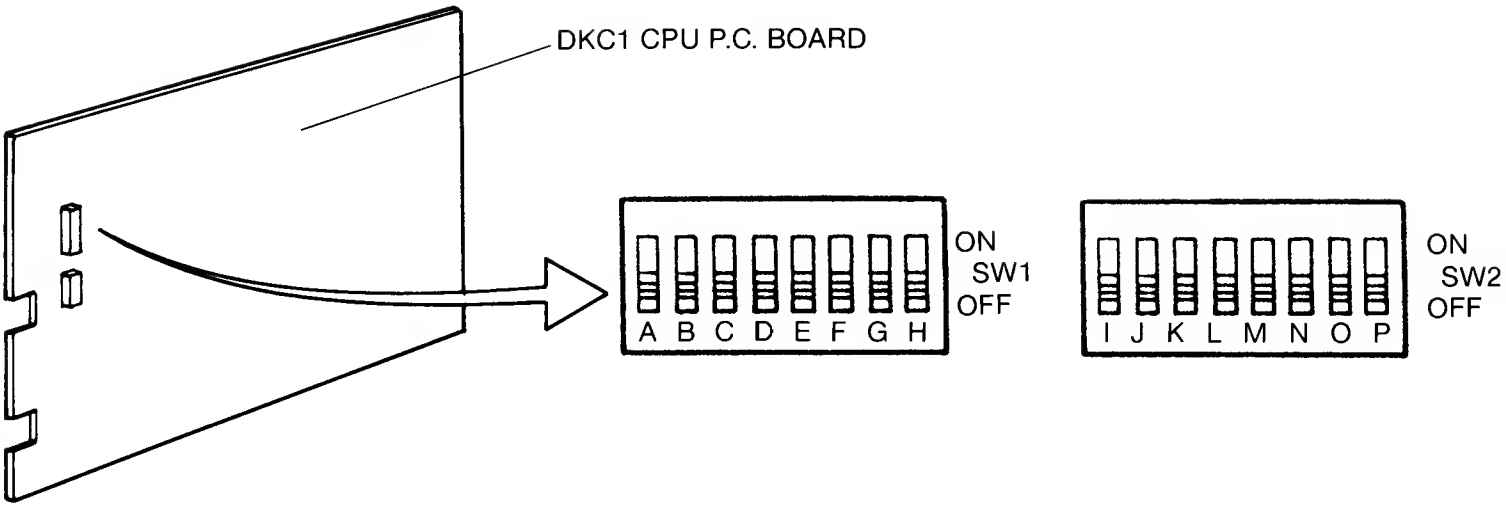

		Toggle (SW1) Settings							
		A	B	C	D	E	F	G	H
Number of Players Per Game	3	OFF	OFF						
	4	ON	OFF						
	5	OFF	ON						
	6	ON	ON						
Extra	30.000PTS.			OFF	OFF				
	40.000PTS.			ON	OFF				
	50.000PTS.			OFF	ON				
	NO EXTRA			ON	ON				
Additional Extra	30.000PTS.					OFF	OFF		
	40.000PTS.					ON	OFF		
	50.000PTS.					OFF	ON		
	NO EXTRA					ON	ON		
Difficulty	Easy (1)							OFF	OFF
	(2)							ON	OFF
	(3)							OFF	ON
	Hard (4)							ON	ON

		Toggle (SW2) Settings							
		I	J	K	L	M	N	O	P
Coin/Credit	3/1	OFF	ON	OFF					
	2/1	OFF	OFF	ON					
	1/1	OFF	OFF	OFF					
	1/2	OFF	ON	ON					
	1/3	ON	OFF	OFF					
	1/4	ON	ON	OFF					
	1/5	ON	OFF	ON					
	1/6	ON	ON	ON					
Game Test	OFF							OFF	
	ON							ON	
Upright Table									OFF
									ON

WARNING

All the Option Switch Settings **MUST** be done with power off.

Adjustment of Horizontal Width

Caution! High Voltage Area — BE CAREFUL!

Using a standard 2.6mm hex non-conductive core alignment driver, carefully turn L453 counter-clockwise for a smaller horizontal screen size. L453 is located in the rear of the monitor just under the deflection yoke.

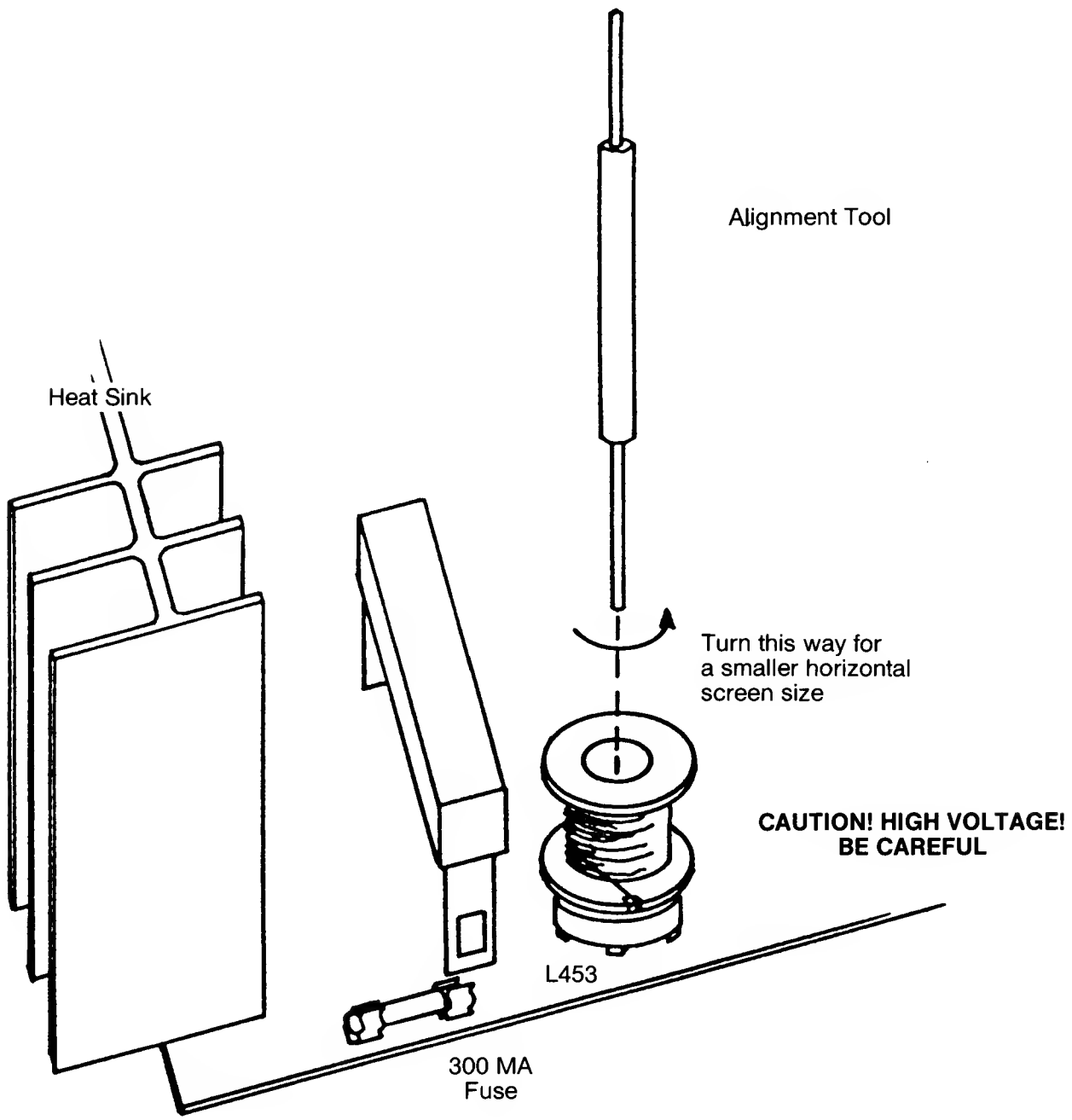

Adjustment of Video Monitor

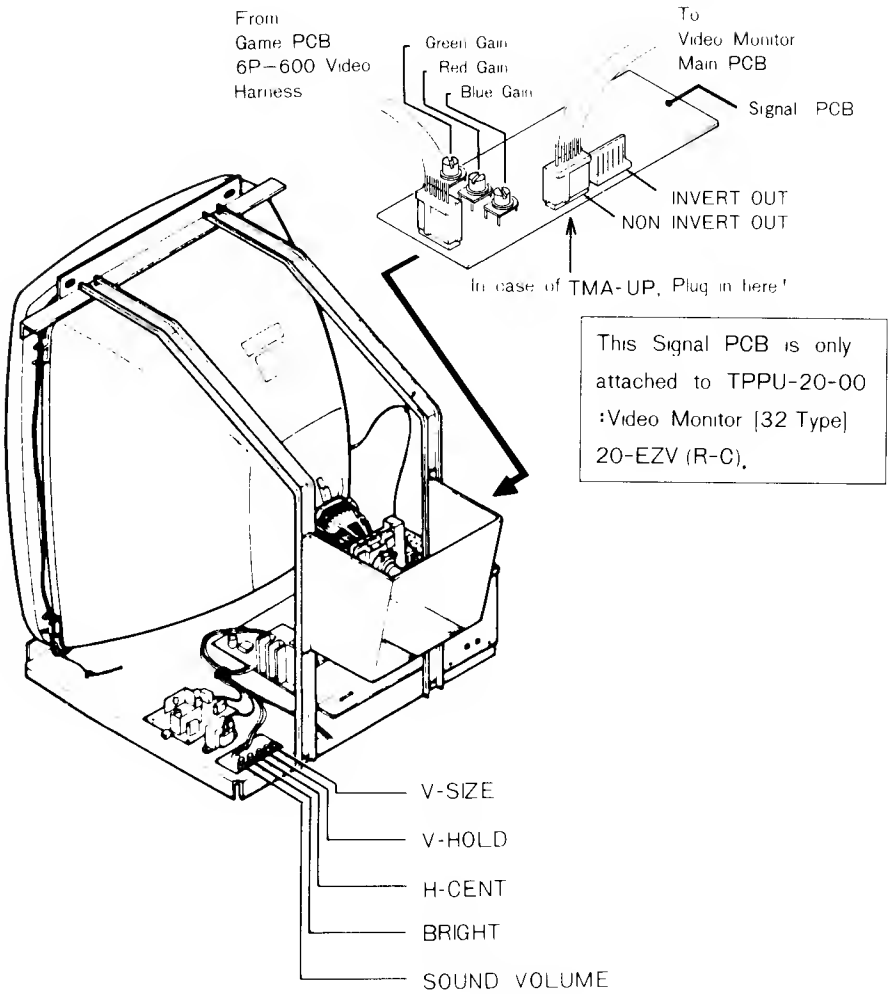

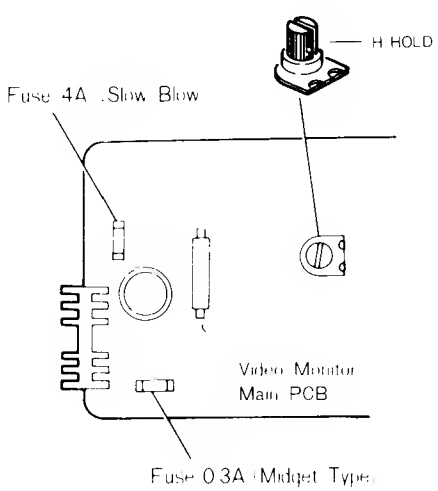

Video Monitor

WARNING

Do not touch the inside of the Video Monitor.
It contains many parts supplied with high voltage.

Bookkeeping and Self-Test

(1) Entry
Press Service Switch and hold it down until Menu of Test Mode displays on the Video Monitor as follows.

Test Mode

1 Bookkeeping Distributions
2 Free Play
3 Self-Test & Monitor Adjustment
4 Return To Game Mode

(2) Selection of Test
A flashing Buzzbee points to the Test.
Momentarily depressing Service Switch will step to next Test. When the Buzzbee is pointing to the desired Test, the details of the Test can be displayed by pressing the Service Switch and holding it down until the details appear on the Video Monitor.
(Except "Return To Game Mode")

(3) Back to Menu of Test Mode

You can recall Menu of Test Mode by holding down Service Switch until it re-appears.

(4) Back to Game Mode

When the Buzzbee is pointing to "Return To Game Mode", you will be able to return to Game Mode (Demonstration Game) by holding down Service Switch until it re-appears.

(WARNING)
Test Mode will go back to Game Mode automatically if you do not push a switch or button or move the controller within a few minutes.

A. Bookkeeping Distributions:
   1. Playtime distributions and number of plays per distribution range.
   2. Score distributions and number of plays per distribution range.
      * To clear all distributions, press either start button.
      ** Bookkeeping distribution system will not function when game is set in Free Play Mode.

B. Free-Play
   Pressing either start button will set or clear "FREE PLAY" mode.

C. Self-Test & Adjustment
   Pressing either start button will step to the next Test.

(C-1) RAM and ROM Test
   The result of RAM and ROM Test will be displayed on the Video Monitor as follows.

Example

RAM ROM TEST

RAM		ROM	CHECKSUM	
7F	OK	7B	OF	OK
7H	OK	7D	"	OK
		7E	"	OK
		7F	"	NG

(OK: Passed)

(NG: Failed)

RAM location on the PCB

ROM location on the PCB

C-2 CRT Test
   Color Bar and Marks on four Corners and center of screen are displayed on the Video Monitor one after another.

C-3 Sound Test
   You will hear the various sounds one after another.

C-4 Switch Test
   The result of the switch condition will be displayed on the Video Monitor when you press each of the switches or move the controllers.

C-5 End of Self-Test.

Maintenance

A. Fuse Replacement
This game contains 4 fuses. Replace fuses only with the same type as listed below.

Specification of Fuses	
(1) Main Fuse U.S.:	5A 125V (90-120V)
(2) Power Supply Fuse	4A 125V
(3) Video Monitor Fuse	4A 125V 0.3A 125V

B. Cleaning
The exterior of the game, all metal parts and all plastic parts can be cleaned with a nonabrasive cleanser. You should be careful when cleaning the plastic parts. A dry cloth may cause scratches which will result in a foggy appearance.

Electrical Rating	
Voltage:	120 (V)
Frequency:	60 (HZ)
Wattage:	120 (W)
Current:	1.3 (AMP)

Switch Maintenance

Micro-Switch Replacement
Whenever you replace any micro-switch on the Operation Panel, a switch gap adjustment is needed as shown below.

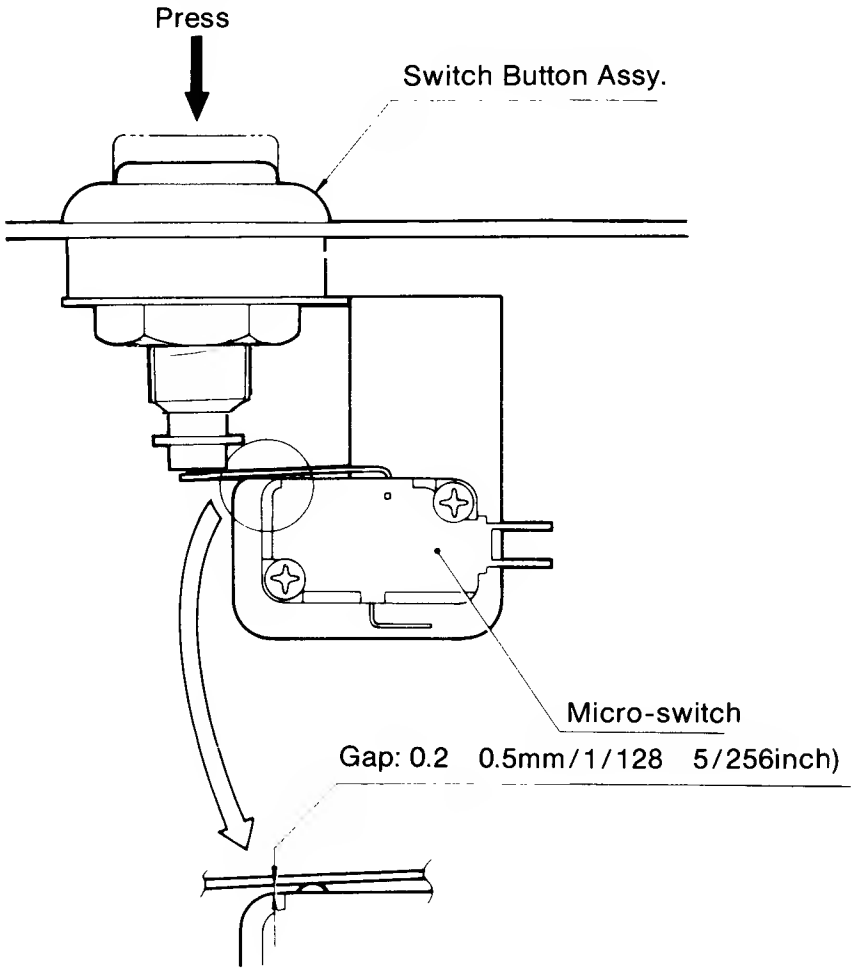

Switch gap adjustment

Lubrication for 2 way Controller

To maintain the 2 way Controller in good condition, lubricate the pillow balls and 2 way Guide Plate approx. every 3 months. See Fig. 9.

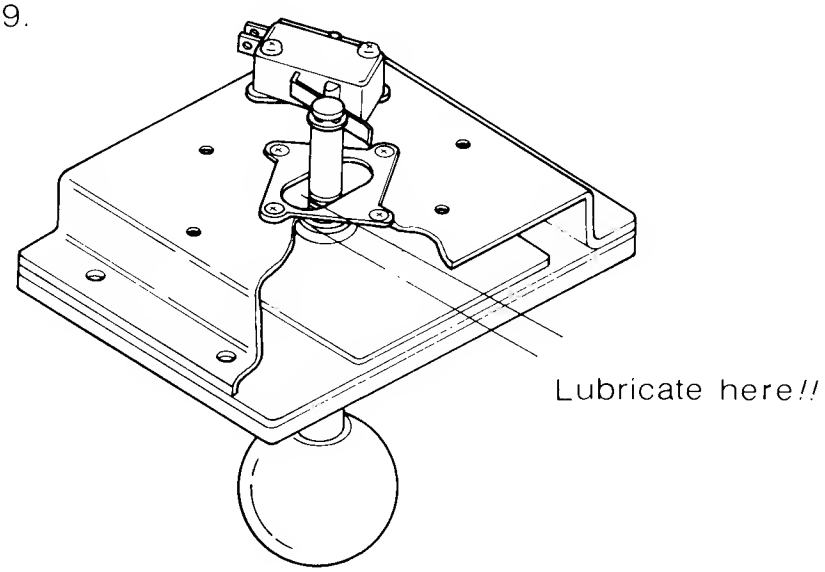

VI. Donkey Kong 3 Wiring Diagram

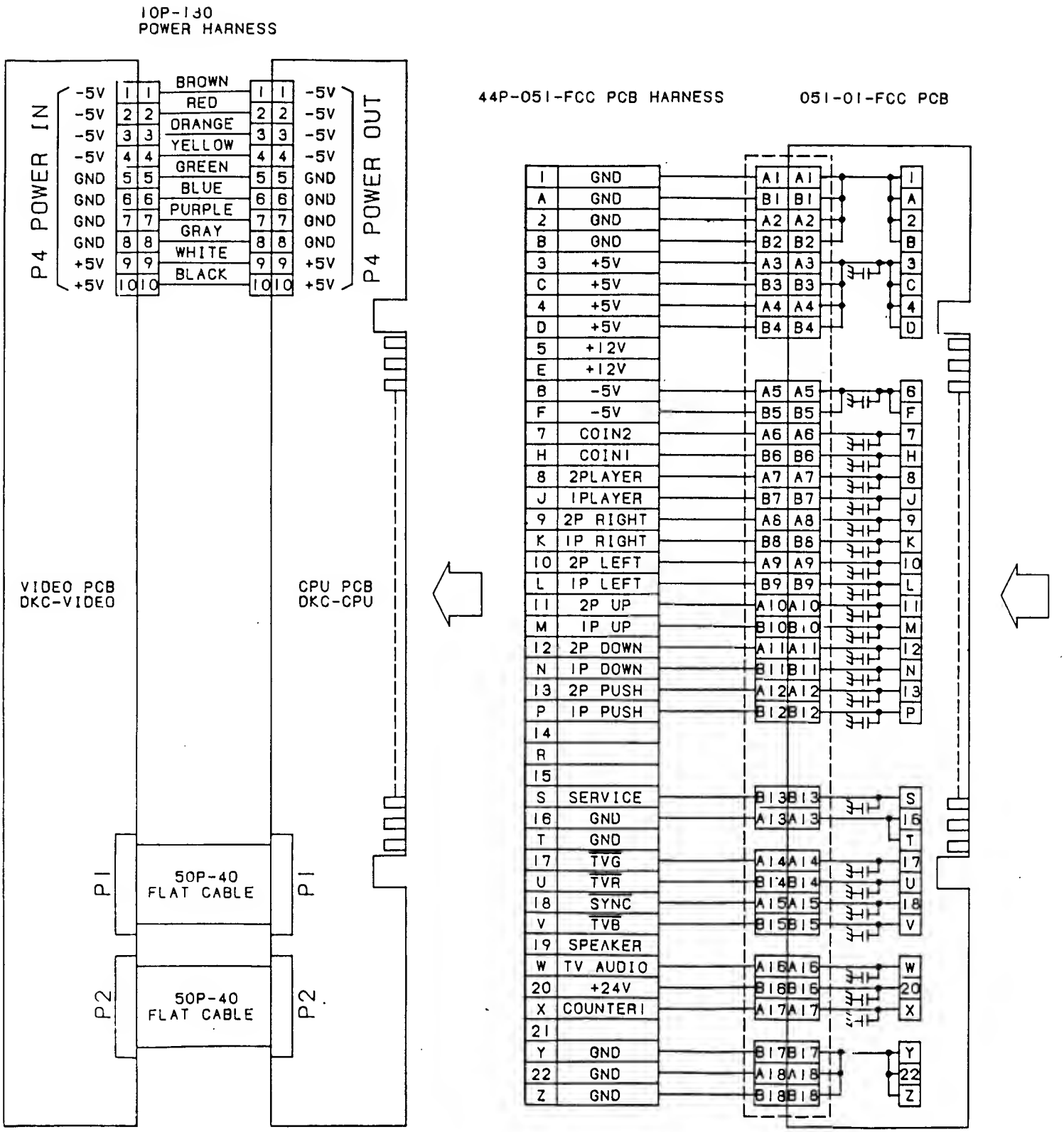

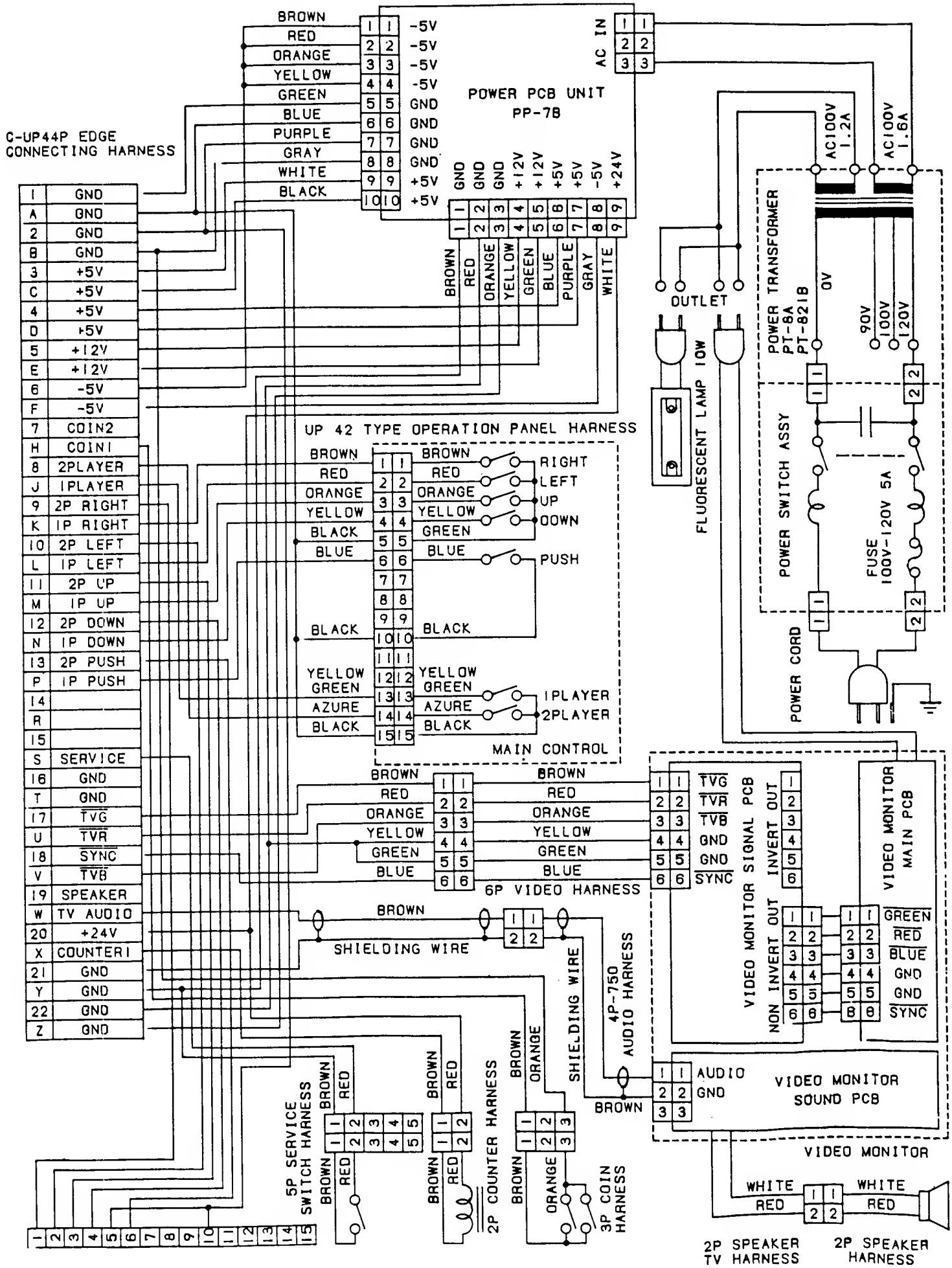
C-UP44P EDGE CONNECTING HARNESS
POWER PCB UNIT PP-7B
AC IN
AC100V 1.2A
AC100V 1.6A
POWER TRANSFORMER PT-8A PT-821B
OUTLET
FLUORESCENT LAMP 10W
POWER SWITCH ASSY
FUSE 100V-120V 5A
POWER CORD
UP 42 TYPE OPERATION PANEL HARNESS
MAIN CONTROL
RIGHT
LEFT
UP
DOWN
PUSH
1PLAYER
2PLAYER
6P VIDEO HARNESS
VIDEO MONITOR SIGNAL PCB
VIDEO MONITOR MAIN PCB
SHIELDING WIRE
4P-750 AUDIO HARNESS
VIDEO MONITOR SOUND PCB
VIDEO MONITOR
5P SERVICE SWITCH HARNESS
2P COUNTER HARNESS
3P COIN HARNESS
SPEAKER
2P SPEAKER TV HARNESS
2P SPEAKER HARNESS

Nintendo®

SERVICE DEPARTMENT

Dear Distributor:

In addition to the steps you have already done, we felt it would benefit your customers if the previous common problems were checked to ensure the modifications had been done. Below is the list of service bulletins which deal with these problems.

We have included copies of these service bulletins:

TKG-05	Slam Switch
DJR-01	Upper Coin Door Hinge
DJR-02	Model 730A Coin Selector
DJR-05	Video Wrap Around

Sincerely,

Nintendo of America Inc.
Service Department

Nintendo®

SERVICE DEPARTMENT

BULLETIN # TKG.05

GAME: Donkey Kong, Donkey Kong Junior, Popeye, Mario Bros. Donkey Kong 3

SUBJECT: Slam Switch

In order to prevent the accumulation of free credits by kicking the coin door, a slam switch should be added.

In all cases the switch (a "normally open" weighted reed switch) should be mounted on the coin door. Connect one side of the slam switch to the brown wire on the coin switch (ground). The other side of the slam switch should be connected to a wire which will be run through the wiring harness to the CPU board. At this point the installations vary for the five (5) games.

Donkey Kong:

TKG2 and TKG3: Attach to Test Point 8, at board coordinates 3L.

TKG4: Attach to Test Point 2-$\overline{\text{RESET}}$, at board coordinates 1L.

Donkey Kong Junior:

Attach to Test Point 2-$\overline{\text{RESET}}$, at board coordinates 1L.

Popeye:

Attach to C13 (47μF electrolytic capacitor), "+" side, at board coordinates 2N.

Mario Bros.:

Attach to C38 (100μF electrolytic capacitor), "+" side, at board coordinates 4F.

Donkey Kong 3:

Attach to C25 (100μF electrolytic capacitor), "+" side, at board coordinates 2E.

Nintendo®

SERVICE DEPARTMENT

BULLETIN # DJR-01

GAME: Donkey Kong Junior, Donkey Kong, Radar Scope

SUBJECT: Upper Coin Door Hinge

It has been brought to our attention that a flattened straw or similar object can be passed through the center opening in the upper hinge. If the object makes contact with the coin switch, it can be used to run up multiple credits.

The solution is to block the opening with a flange made of wood or metal. This flange should be mounted to the inside of the cabinet and can be obtained from us as a retrofit kit.

This problem is present in all Radar Scope uprights, Donkey Kong uprights and early Donkey Kong Junior uprights.

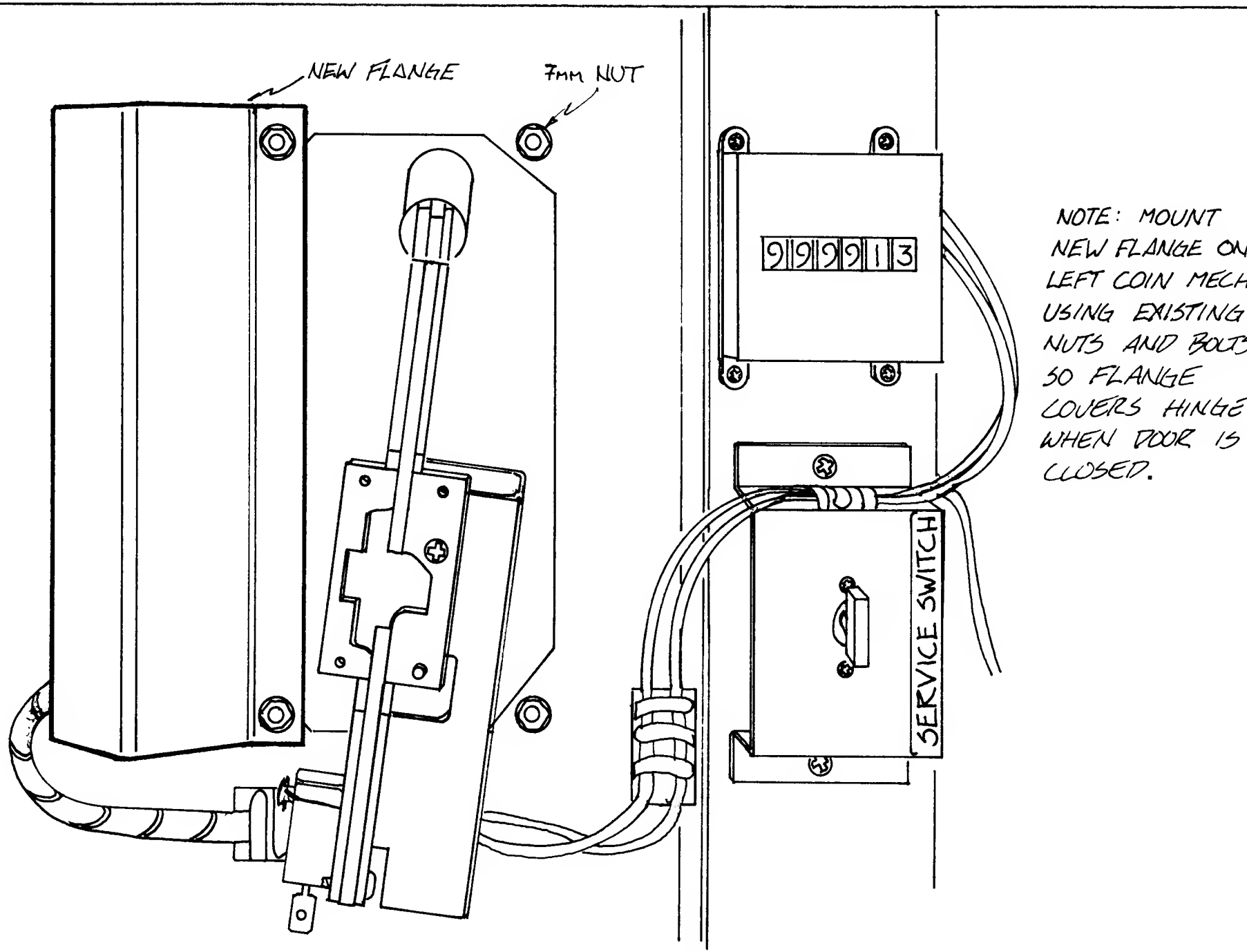

DETAIL COIN MECH.

Retrofit Flange

Nintendo®

SERVICE DEPARTMENT

BULLETIN # DJR-02

GAME: Donkey Kong Junior

SUBJECT: Model #730A Coin Selector

It has come to our attention that there is a problem with the model #730A coin selector in that a nickel or a penny, if flipped through the entry just right, will continue through the mechanism and establish credits.

The solution to this problem is to add two small metal pieces to the selector as shown in the accompanying drawing. These pieces are available at no charge. The threaded holes in the selector is an M3 X 6MM size.

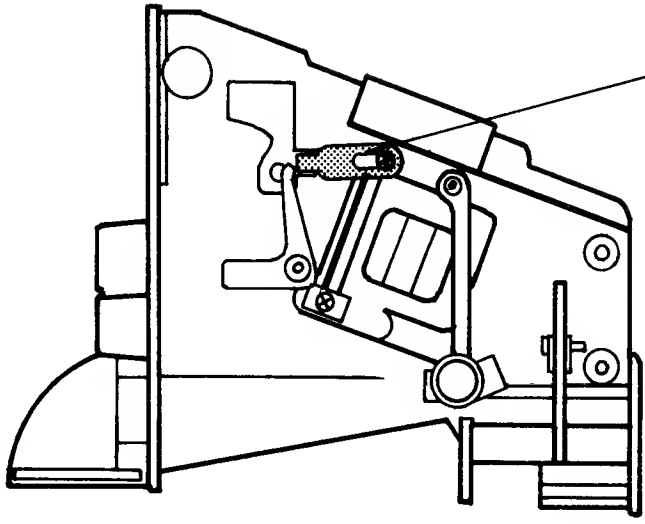

NEW PART

FITS INTO NOTCH
SCREWS INTO HOLE

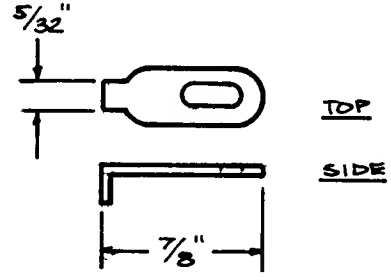

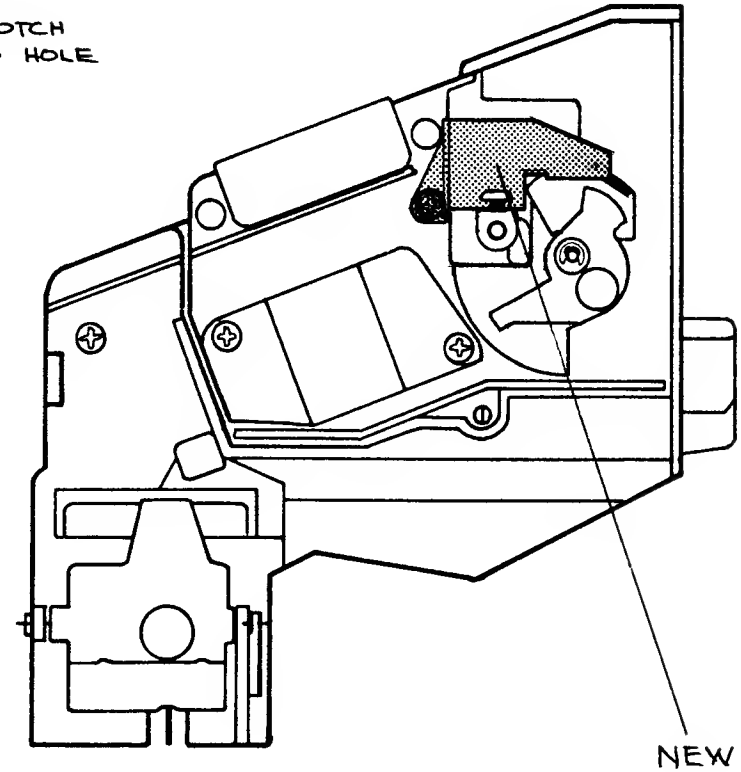

NEW PART

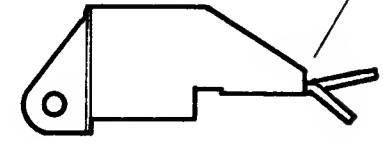

Nintendo®

SERVICE DEPARTMENT

BULLETIN # DJR--05

GAME: Donkey Kong, Donkey Kong Junior

SUBJECT: Video Wrap Around on Left Side of Picture

We have recently received a number of service calls concerning the wrap around or fold over of the picture on the left hand side of the monitor. In most cases the problem may be solved by replacing capacitor C407 on the main monitor PC board. This is located just to the left of the high voltage cage when viewing from the rear of the monitor. The value of this capacitor is 10 microfarads at 160 volts (of course, any capacitor of 10 microfarads with a voltage rating higher will work also).

This capacitor is connected between ground and the B+ supply for the vertical output transistors, so if this capacitor becomes leaky it does not allow full vertical deflection of the screen; consequently, you get video information imposed over the other (wrap around).

If you have questions about this or any other questions concerning Nintendo products, please feel free to contact us.

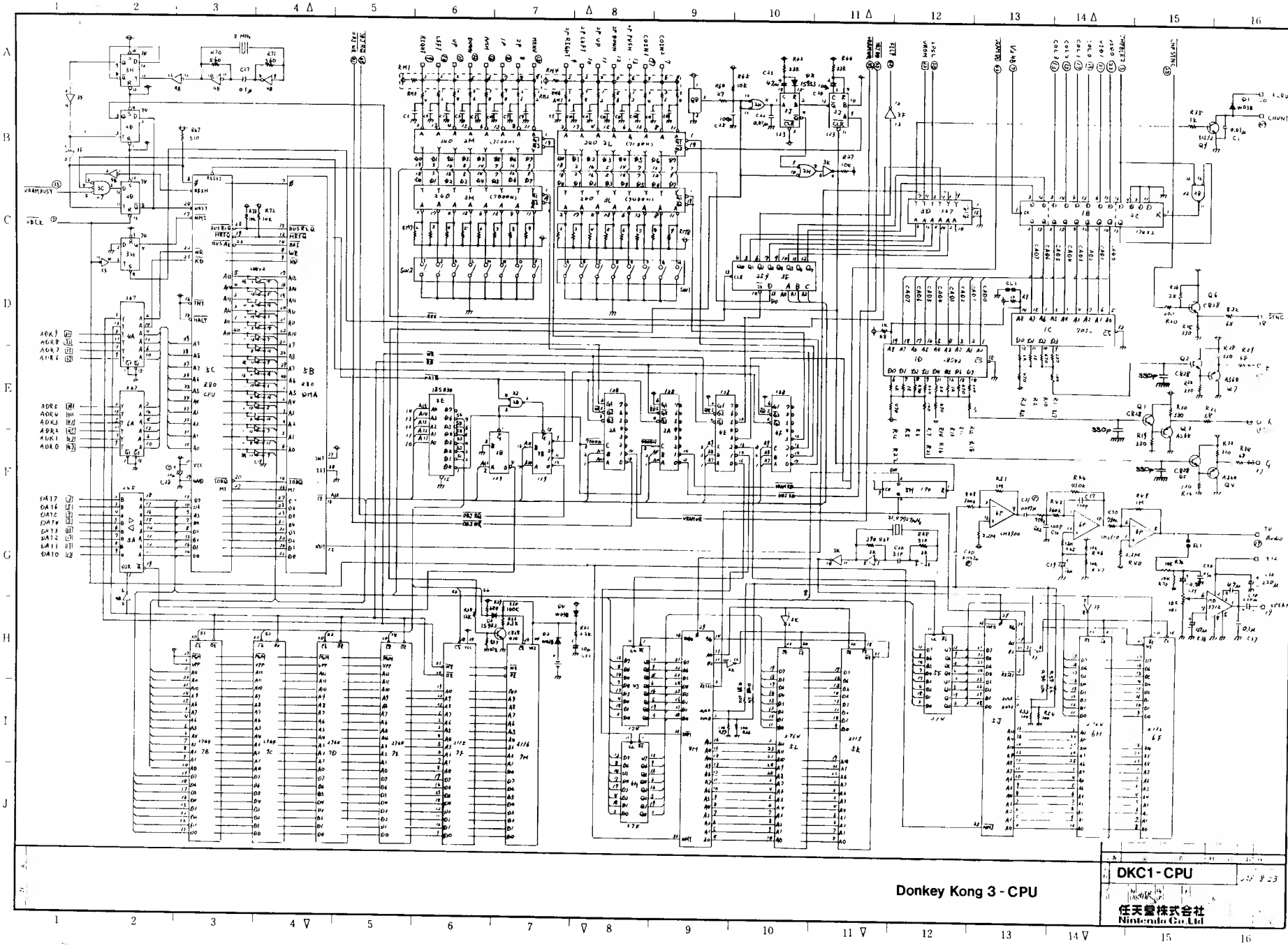
Donkey Kong 3 - CPU
DKC1 - CPU
任天堂株式会社
Nintendo Co.Ltd

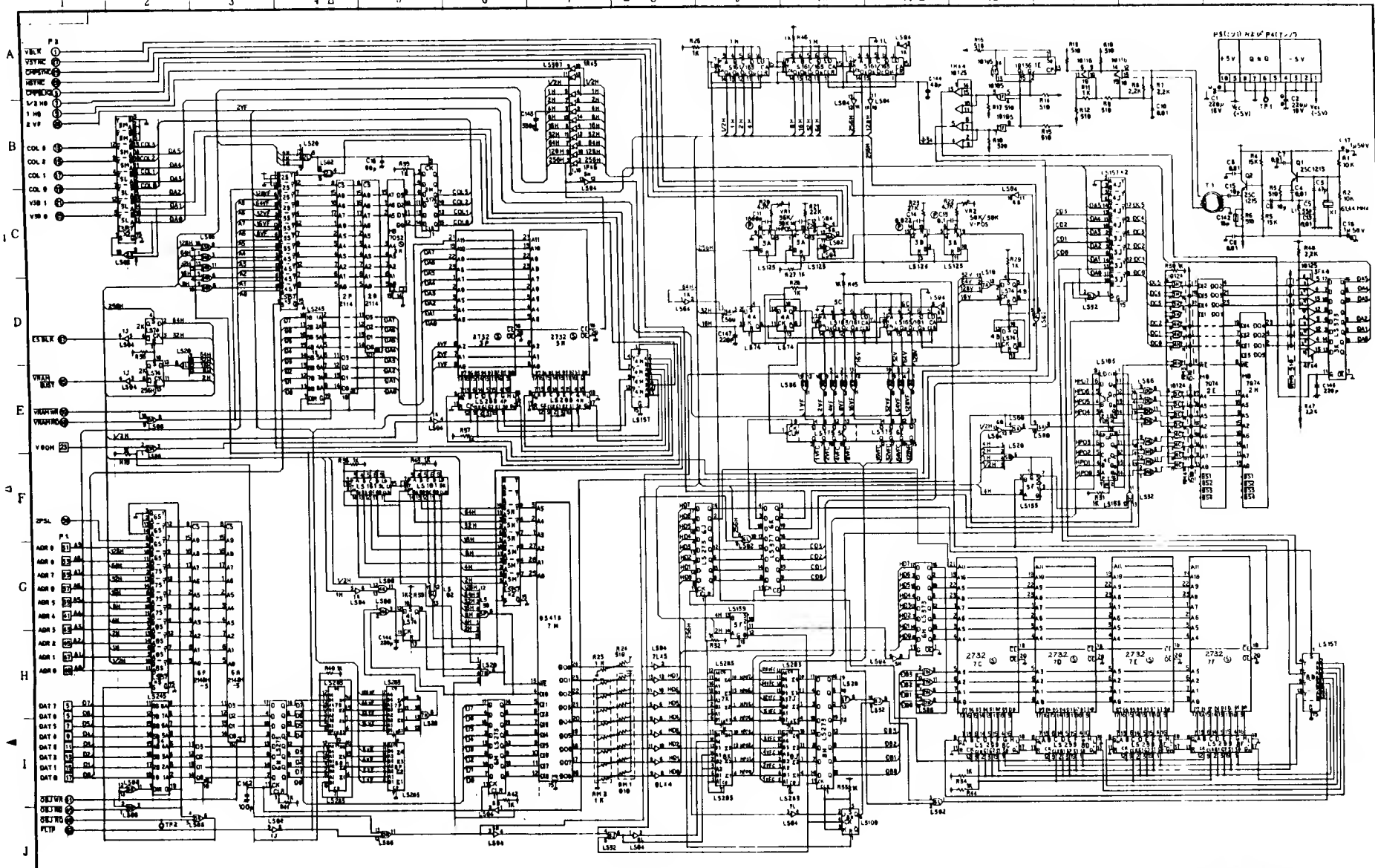

Donkey Kong 3 - Video

DKC1 - Video

任天堂株式会社
Nintendo Co.,Ltd.

PP-7B POWER SUPPLY SCHEMATIC

© 1983 Nintendo of America Inc.

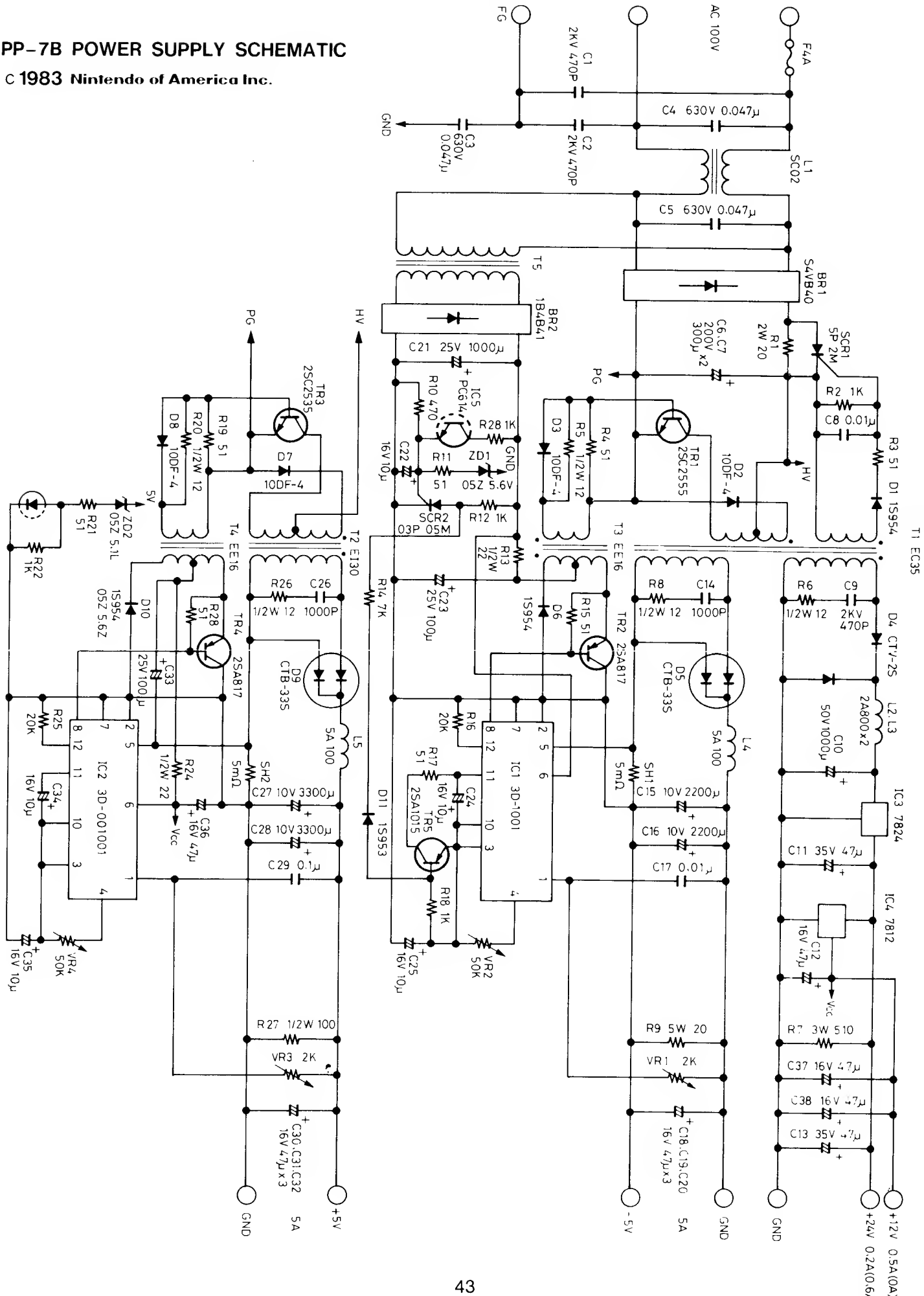

IX. REORDER PARTS LIST

PARTS LIST: DKCI-UP Game Cabinet Assembly (See Fig. 1)

ITEM	PARTS NO.	DESCRIPTION
1	DJRU-01-01	Body (Wooden Game Cabinet)
2	DKCU-12-16	DKC-US Display Panel (Name Plate)
3	TKGU-01-29	Fluorescent Lamp Assy.
4	DKCU-12-15	DKC-US Front Screen
5	TKGU-01-53	Front Screen Frame (Lower Retainer)
6	DKCU-23-60	DKC-US Complete Operation Panel Assembly
7	TKGU-01-31	Operation Panel Clamp A (2 Required)
8	TKGU-01-01-03	Cash Box
9	TKGU-01-28	Coin Door Assy.
10	TKGU-01-04	Coin Door Lock
11	DJRU-01-02	Coin Selector: Order By Currency
12	DJRU-01-02-01	Coin Switch: Order By Coin Selector
13	TKGU-01-11	Game Countor
14	TKGU-01-33	Service Switch
15	TKGU-01-64	Service Switch Bracket
16	TKGU-01-43	Speaker

PARTS LIST: DKCI-UP Game Cabinet Assembly (See Fig. 2)

ITEM	PARTS NO.	DESCRIPTION
1	TKGU-01-01-05	Rear Panel
2	TKGU-01-03	Rear Panel Lock
3	DJRU-01-68	Blind Cardboard (Small)
4	DJRU-01-67	Blind Cardboard (Large)
5	DJRU-20-00	Video Monitor (20-5F)
6	DKCU-22-01	DKC1-VIDEO Complete PCB Assy.
7	DKCU-21-01	DCK1-CPU Complete PCB Assy.
8	TPP2-01-20	Dual Locking-head PCB Spacer 10N (8 Required)
9	TPPU-01-01-10	Shield Cage
10	DKCU-11-11	051 Shield Cover
11	DKCU-23-01	051 FCC Complete PCB Assy.
12	TKGU-01-65	Strain Relief Bushing Plate
13	TKGU-01-10	Strain Relief Bushing
14	TKGU-01-08	Power Cord: Order By Voltage & Plug Type
15	TMAU-30-12	Power ON/OFF Switch Assy. (For 90-120V)
	TMAU-30-13	Power ON/OFF Switch Assy. (For 200-240V)
16	DJRU-18-01	PP-7B Complete Power Supply Assy.
17	DJRU-19-01-01	PT-821B Power Transformer (For 90-120V)
	DJRU-09-01-01	PT8A Power Transformer (For 200-240V)
18	TKGU-01-01-02	Transformer Base B
19	TKGU-09-01-03	Terminal Block 6-Position Type
	TKGU 19-01-03	Terminal Block 4-Position Type
20	TKGU 09-01-02	Outlet Through Isolation Transformer
21	TKGU-01-30	Caster (2 Required)

PARTS LIST: DKC1-UP Operation Panel Assembly (See Fig. 3)

ITEM	PARTS NO.	DESCRIPTION
1	DKCU-14-11	Complete 4 way Controller Assy.
2	TKGU-23-51	4 way Guide Plate
3	TKGU-23-23	E Ring 4
4	TKGU-23-21	Switch Collar
5	TKGU-23-22	Lever Spring
6	TKGU-23-20	Spring Stopper
7	TKGU-23-13	Micro-switch VL 12L (Bent) (4 Required)
8	TKGU-23-17	Switch Spacer (4 Required)
9	TKGU-23-16	Bearing Bracket
10	TMAU-12-15	Lever Plate
11	TMAU-12-14	Control Knob Plate 28D
12	TMAU-12-16	Controller Knob Collar 8L
13	TMAU-11-18	Knob with Shaft 80.5L
14	TKGU-23-34	Pal Nut (4 Required)
15	TKGU-23-26	Nut Plate (4 Required)
16	TKGU-23-12	Sutton Bracket (3 Required)
17	TMAU-34-18	Micro-switch VL 12L (Straight) (4 Required)
18	TMAU-12-18	Collar 34 X 28 X 7H
19	TMAU-11-28	Operation Panel Fastener B 50W
20	DKCU-12-11	DKC-US Operation Panel
21	TKGU-23-31	Blue Button Assy. (For 1P, 2P Button)
22	TKGU-23-32	Orange Button Assy. (For Spray Button)

PARTS LIST: DKC1-UP Wiring Harness

ITEM	PARTS NO.	DESCRIPTION
1	TMAU-41-17	C-UP 44P044 Edge Connecting Harness
2	DKCU-41-11	44P 051-FCC PCB Harness
3	DJRU-13-07	4P-750 Audio Harness (750 mm)
4	DJRU-13-31	6P-1000 Video Harness (1000 mm)
5	DJRU-13-02	2P Counter Harness (820 mm)
6	DJRU-13-05	5P Service Switch Harness (1,150 mm)
7	DJRU-13-04	3P Coin Harness (850 mm)
8	TKGU-13-06	2P Speaker TV Harness [2p-370] (370 mm)
9	TKGU-13-17	2P Speaker Harness [2P-860] (860 mm)
10	TPPU-93-10	UP-42 Type 15P-Operation Panel Harness
11	DJRU-13-12	50P Flat Cable [50P-40]
12	TPPU-93-11	10P-130 Power Harness (130 mm)

PARTS LIST: DKC1-CPU PCB Assembly

NO.	DESCRIPTION (Reference Designation and Location)	
DKCU-21-01	DKC1-CPU Complete PCB Assembly	
DKCU-21-11	Z80A Microprocessor	(5C)
DKCU-21-12	Z80A DMA Controllor	(5B)
DKCU-21-13	PC2A03 Microprocessor	(4M,5J)
DKCU-21-14	2764 8K byte EPROM 350ns DKC1-C-7B	(7B)
DKCU-21-15	2764 8K byte EPROM 350ns DKC1-C-7C	(7C)
DKCU-21-16	2764 8K byte EPROM 350ns DKC1-C-7D	(7D)
DKCU-21-17	2764 8K byte EPROM 350ns DKC1-C-7E	(7E)
DKCU-21-18	2764 8K byte EPROM 350ns DKC1-C-6H	(6H)
DKCU-21-19	2764 8K byte EPROM 350ns DKC1-C-5L	(5L)
DKCU-21-28	6116 2K byte C-MOS RAM 200 ns	(7H)
DKCU-21-21	2115 2K byte RAM 200ns	(5K, 6E, 7F)
DKCU-21-22	LM3900 Audio Amplifier	(6P)
DKCU-21-23	TBP28S42N 512 X 8bit Bipolar ROM	(1D)
DKCU-21-24	MB7053 512 X 4bit Bipolar ROM	(1C)
DKCU-21-25	TBP18S030 32 X 8bit ROM	(5E)
DKCU-21-26	74LS00 Quad 2-Input NAND	(2H)
DKCU-21-27	74LS04 Hex Inveter	(3F, 3K, 4B)
DKCU-21-28	74LS27 Triple 3-Input NOR	(3C)
DKCU-21-29	74LS32 Quad D-Type Flip-Flop	(2B)
DKCU-21-30	74LS74 Dul D-Type Flip-Flop	(2D, 3H)
DKCU-21-31	74LS123 Dual Retriggerable Single Shot	(3J)
DKCU-21-32	74LS138 3 To 8 Demultiplexer	(2A, 3A, 4E, 4F)
DKCU-21-33	74LS139 Dual 2 To 4 Line Decoder	(3B)
DKCU-21-34	74LS174 Hex D-Type Flip-Flop	(3B)
DKCU-21-35	74LS240 Octal Invertor Buffer	(1B, 2C, 5H)
DKCU-21-36	74LS244 Octal 3 State Bus Buffer	(2L, 2M, 3L, 3M)
DKCU-21-37	74LF245 Octal Bus Transceiver	(6E, 7A)
DKCU-21-38	74LS259 8-bit Addressable Latches	(5A)
DKCU-21-39	74LS367 HEX Bus Driver	(3E, 4A, 6A)
DKCU-21-40	74LS374 Octal 3-State D-Type Flip-Flop	(4H, 4J, 5F)
DKCU-21-41	PST518 Reference Voltage Detector	(8Q)
DKCU-21-42	2SA564 PNP Transister	(Q3, Q4, Q7)
DKCU-21-43	2SD592 NPN Transistor	(Q9)
DKCU-21-44	2SC828 NPN Transistor	(Q1, Q2, Q5, Q6, Q10)
DKCU-21-45	1S953 Diode	(D3, D5, D6)
DKCU-21-46	W03B Diode	(D1, D2, D4)
DKCU-21-47	27 Ohm 1/4W Resistor	(R64)
DKCU-21-48	68 Ohm 1/4W Resistor	(R29, R31, R32, R34)
DKCU-21-49	100 Ohm 1/4W Resistor	(R17, R18, R21, R36, R37, R53, R54)
DKCU-21-50	200 Ohm 1/4W Resistor	(R20)
DKCU-21-51	220 Ohm 1/4W Resistor	(R1, R7, R12)
DKCU-21-52	330 Ohm 1/4W Resistor	(R19, R23, R24, R25, R28, R30, R33)
DKCU-21-58	390 Ohm 1/4W Resistor	(R69)
DKCU-21-54	470 Ohm 1/4W Resistor	(R6, R10, R11, R15, R16, R22)

NO.	DESCRIPTION (Reference Designation and Location)	
DKCU-21-55	510 Ohm 1/4W Resistor	(R67, R68)
DKCU-21-56	560 Ohm 1/4W Resistor	(R70, R71)
DKCU-21-57	680 Ohm 1/4W Resistor	(R59)
DKCU-21-58	1K Ohm 1/4W Resistor	(R2, R5, R8, R9, R13, R35)
DKCU-21-59	2K Ohm 1/4W Resistor	(R3, R4, R14, R26)
DKCU-21-60	2.2K Ohm 1/4W Resistor	(R61)
DKCU-21-61	3.3K Ohm 1/4W Resistor	(R62)
DKCU-21-62	10K Ohm 1/4W Resistor	(R27, R41, R46, R47) (R57, R65, R72, R73)
DKCU-21-63	12K Ohm 1/4W Resistor	(R38, R55, R58)
DKCU-21-64	20K Ohm 1/4W Resistor	(R39, R56)
DKCU-21-65	33K Ohm 1/4W Resistor	(R63, R66)
DKCU-21-66	100K Ohm 1/4W Resistor	(R48, R68)
DKCU-21-67	300K Ohm 1/4W Resistor	(R43)
DKCU-21-68	750K Ohm 1/4W Resistor	(R42, R44, R50)
DKCU-21-69	1M Ohm 1/4W Resistor	(R49, R51)
DKCU-21-70	1.8M Ohm 1/4W Resistor	(R45)
DKCU-21-71	2.2M Ohm 1/4W Resistor	(R48, R52)
DKCU-21-72	Hex 68 Ohm 1/4W Resistor Array	(RM2, RM3, RM5, RM6)
DKCU-21-73	Octal 1K Ohm 1/4W Resistor Array	(RM1, RM4)
DKCU-21-74	Octal 4.7K Ohm 1/4W Resistor Array	(RM7, RM8)
DKCU-21-75	51pF 50V Ceramic-Disc Capacitor	(C26)
DKCU-21-76	100pF 50V Ceramic-Disc Capacitor	(C17, C18)
DKCU-21-77	0.01uF 50V Ceramic-Disk Capacitor	(C1, C22, C45, C46, C47, C47)
DKCU-21-78	0.1uF 50V Ceramic-Disc Capacitor	(C2-C16, C27, C44)
DKCU-21-79	0.047uF 50V Film Capacitor	(C20, C21)
DKCU-21-80	10uF-16V Tantalum Radia Capacitor	(C28)
DKCU-21-81	10uF-16V A1 Electrolytic Radial Capacitor	(C19, C29, C31, C32, C33, C34)
DKCU-21-82	47uF 16V A1 Electrolytic Radial Capacitor	(C23)
DKCU-21-83	100uF 16V A1 Electrolytic Radial Capacitor	(C24, C25)
DKCU-21-84	470uF 16V A1 Electrolytic Radial Capacitor	(C30, C42, C43)
DKCU-21-83	8-MHz Crystal	(X2)
DKCU-21-86	21.47727-MHz Crystal	(X1)
DKCU-21-87	NC5884-09 Minbus Bar	
DKCU-21-88	16 Pin DIP IC Socket	
DKCU-21-89	20 Pin DIP IC Socket	
DKCU-21-90	28 Pin DIP IC Socket	
DKCU-21-91	40 Pin DIP IC Socket	
DKCU-21-92	8-Station Single-Throw DIP Bit Switch	(SW1, SW2)
DKCU-21-93	GP-7 Ferrite Beads	(FC1-FC13)
DKCU-21-94	10Pin Connector Receptacle	(P3)
DKCU-21-95	50Pin Flat Cable Header	(P1, P2)
DKCU-21-96	Battery Case TYPE 32-4 UM-3 X 2	
DKCU-21-97	Philips Head Machine Screw (With Spring Washer M2.6 X 8)	

NO.	DESCRIPTION (Reference Designation and Location)	
DKCU-21-98	Flat Washer M2.6	
DKCU-21-29	Nut Plate M2.6	
DKCU-21-100	Beabed Wire Tie	
DKCU-21-101	Dry Battery Size AA (UM-3)	

PARTS LIST: DKC1-VIDEO PCB Assembly

NO.	DESCRIPTION (Reference Designation and Location)	
DKCU-22-01	DKC1-VIDEO Complete PCB Assembly	
DKCU-22-11	2732 4K byte EPROM DKC1-V-3P	(3P)
DKCU-22-12	2732 4K byte EPROM DKC1-V-3N	(3N)
DKCU-22-13	2732 4K byte EPROM DKC1-V-7C	(7C)
DKCU-22-14	2732 4K byte EPROM DKC -V-7D	(7D)
DKCU-22-15	2732 4K byte EPROM DKC1-V-7E	(7E)
DKCU-22-16	2732 4K byte EPROM DKC1-V-7F	(7F)
DKCU-22-17	74LS00 Quad 2-Input NAND	(4K, 5A)
DKCU-22-18	74LS02 Quad 2-Input NOR	(2J, 6A, 6L)
DKCU-22-19	74LS04 Hex Inverter	(1J, 1K, 5H, 6B, 7L, 8L)
DKCU-22-20	74LS08 Quad 2-Input AND	(5R)
DKCU-22-21	74LS10 Triple 3-Input NAND	(7A)
DKCU-22-22	74LS20 Dual 4-Input NAND	(2L, 5B, 6F, 7N)
DKCU-22-23	74LS30 8 Input NAND	(5P)
DKCU-22-24	74LS32 Quad D-Type Flip-Flop	(5J)
DKCU-22-25	74LS74 Dual D-Type Flip-Flop	(2K, 4A, 4B, 4L)
DKCU-22-26	74LS86 Quad 2-Input Exclusive-OR	(3D, 3R, 4D, 4R, 5D, 6D, 7H)
DKCU-22-27	74LS109 Dual J-K-Flip-Flop	(8N)
DKCU-22-28	74LS123 Dual Retriggerable Single Shot	(3B)
DKCU-22-29	74LS139 Dual 2 To 4 Line Decoder	(5F)
DKCU-22-30	74LS157 Quad 2-Line to 1-Line Data Selector	(2S, 3J, 3L, 3M, 3S, 4J, 4M, 5M, 5N, 6S, 7S, 8B, 8S)
DKCU-22-31	74LS161 4-bit Binary Countor	(5C, 5K, 6C, 6K)
DKCU-22-32	74LS163 4-bit Binary Countor	(3E, 4E)
DKCU-22-33	74LS174 Hex D-Type Flip-Flop	(2M)
DKCU-22-34	74LS175 Quad D-Type Flip-Flop	(5E, 6E)
DKCU-22-35	74LS245 Octal Bus Transceiver	(1S, 5S)
DKCU-22-36	74LS273 Octal D-Type Flip-Flop	(6J, 6M, 6N, 8H)
DKCU-22-37	74LS283 4-bit Binary Fll Adder	(7J, 7K, 7P, 7R, 8J, 8K, 8P, 8R)
DKCU-22-38	74LS299 8-bit Shift Registors	(4N, 4P, 8C, 8D, 8E, 8F)
DKCU-22-39	74LS367 HEX Bus Driver	(1P, 1R)
DKCU-22-40	74LS373 Octal 3-State D-Latches	(3K, 6H)
DKCU-22-41	74LS377 Octal D-Type Flip-Flop	(6K)
DKCU-22-42	74LS161 Schottkey 4-bit Binary Countor	(1L, 1M, 1N)
DKCU-22-43	MB10105 Triple 2-3-2 Input OR/NOR	(1F)
DKCU-22-44	MB10116 Triple Line Receivers	(1D)
DKCU-22-45	MB10124 Quad TTL-to-ECL Translators	(3C, 3H, 4C, 4H)

NO.	DESCRIPTION (Reference Designation and Location)	
DKCU-22-46	MB10125 Quad ECL-to-TTL Translators	(1H, 3F, 4F)
DKCU-22-47	MB10136 Universal Hexadecimal countor	(1E)
DKCU-22-48	MB7074 ECL-RAM with Radiator Fin	(2E, 2H)
DKCU-22-49	MB93419 64 X 9-bit Bipolar RAM	(7M)
DKCU-22-50	MB8114 1024K X 4-bit MOS RAM	(2P, 2R)
DKCU-22-51	MB8148L55 1024K X 4-bit Bipolar RAM	(6P, 6R)
DKCU-22-52	24S10 256 X 4-bit Bipolar PROM	(2N)
DKCU-22-55	510 Ohm 1/4W Resistor	(R3, R6, R9, R10, R12-R18, R24)
DKCU-22-58	1K Ohm 1/4W Resistor	(R11, R19, R25-R46)
DKCU-22-59	2.2K Ohm 1/4W Resistor	(R7, R8, R47, R48)
DKCU-22-68	4.7K Ohm 1/4W Resistor	(R20, R22)
DKCU-22-61	10K Ohm 1/4W Resistor	(R1, R2)
DKCU-22-62	10K Ohm 1/4W Resistor	(R4, R5)
DKCU-22-63	22K Ohm 1/4W Resistor	(R21)
DKCU-22-64	27K Ohm 1/4W Variable Resistor	(R23)
DKCU-22-65	50K Ohm 1/3W Variable Resistor	(VR1, VR2)
DKCU-22-66	Octal 510 Ohm 1/4W Resistor Array	(RM1, RM3-RM5)
DKCU-22-67	Octal 1K Ohm 1/4W Resistor Array	(RM2)
DKCU-22-68	10pF 50V Ceramic-Disc Capacitor	(C8, C15)
DKCU-22-69	33pF 50V Ceramic-Disc Capacitor	(C5)
DKCU-22-70	68pF 50V Ceramic-Disc Capacitor	(C16)
DKCU-22-71	47pF 50V Ceramic-Disc Capacitor	(C3)
DKCU-22-72	220pF 50V Ceramic-Disc Capacitor	(C12, C145, C146, C147)
DKCU-22-73	330pF 50V Ceramic-Disc Capacitor	
DKCU-22-74	0.01uF 50V Ceramic-Disc Capacitor	(C4, C6, C7, C19-C141, C13)
DKCU-22-75	0.1uF 50V Film Capacitor	(C11)
DKCU-22-76	0.01uF 50V Film Capacitor	(C14)
DKCU-22-77	0.022uF 50V Film Capacitor	(C17, C18)
DKCU-22-78	1uF 50V Al Electrolytic Radial Capacitor	
DKCU-22-79	220uF Al Electrolytic Radial Capacitor	(C1, C2, C9, C10)
DKCU-22-90	61.44-MHz Crystal	

PARTS LIST: DKC1-FCC CB Assembly

NO.	DESCRIPTION (Reference Designation and Location)
DKCU-23-01	DKC1-FCC Complete PCB Assembly
DKCU-23-11	W-P0736 36-Pin Connector
DKCU-23-12	0.01uF 50V Ceramic-Disc Capacitor
DKCU-23-13	0.001uF 50V Ceramic-Disc Capacitor
DKCU-23-14	5pF Ceramic-Disc Capacitor

PARTS LIST: DKC1-FCCC PCB Assembly

NO.	DESCRIPTION (Reference Designation and Location)	
DKCU-24-01	(PP7B) Power PC Board Complete Set	
DKCU-24-11	2SC2555 NPN Transistor	(TR1)
DKCU-24-12	2SA817 PNP Transistor	(TR2, TR4)
DKCU-24-13	2SC2535 NPN Transistor	(TR3)
DKCU-24-14	2SA1015 PNP Transistor	(TR5)
DKCU-24-15	CTV-2S-Fast Recovery Center Tap Diode	(D4)
DKCU-24-16	CTB33S Schottky Diode	(D5, D9)
DKCU-24-17	S4UB40 4A/400UW Silicon Rectifier Diode	(BR1)
DKCU-24-18	1B4B41 Silicon Rectifier Diode	(BR2)
DKCU-24-19	3D-1001 Hybrid IC	(IC1, IC2)
DKCU-24-20	7824 3-Terminal Regulator	(IC3)
DKCU-24-21	7812 3-Terminal Regulator	(IC4)
DKCU-24-22	5P4M Thyristors	(SCR1)
DKCU-24-23	03P05M Thyristors	(SCR2)
DKCU-24-24	1S954 Diode	(D1, D6, D10, D11)
DKCU-24-25	10DF-4 Diode	(D2, D3, D7, D8)
DKCU-24-26	PC614 Poto Coupler	(IC5)
DKCU-22-27	05Z5.6V Zener Diode	(ZD1)
DKCU-24-28	05Z5.1L Zener Diode	(ZD2)
DKCU-24-29	05Z5.6Z Zener Diode	(ZD3)
DKCU-24-30	470pF 2KV Ceramic-Disc Capacitor	(C1, C2, C9)
DKCU-24-31	0.1uF 50V Ceramic-Disc Capacitor	(C29)
DKCU-24-32	0.047uF 630V Film Capacitor	(C3, C4, C5)
DKCU-25-33	0.01uF 50V Film Capacitor	(C8, C17)
DKCU-25-34	1000pF 50V Film Capacitor	(C14, C26)
DKCU-25-35	1000uF 50V Al Electrolytic Capacitor	(C10)
DKCU-25-36	47uF 35V Al Electrolytic Capacitor	(C11, C13)
DKCU-25-37	47uF 16V Al Electrolytic Capacitor	(C12, C18, C19, C28, C30, C31, C32, C36, C37, C38)
DKCU-25-28	3300uF 10V Al Electrolytic Capacitor	(C27, C28, C15, C16)
DKCU-25-39	100uF 25V Al Electrolytic Capacitor	(C23, C33)
DKCU-25-40	10uF 16v Al Electrolytic Capacitor	(C22, C24, C25, C34, C35)
DKCU-25-41	330uF 200V Al Electrolytic Capacitor	(C6, C7)
DKCU-25-42	1000uF 25V Al Electrolytic Capacitor	(C21)
DKCU-25-43	20 Ohm 2W Resistor (Coil Winding)	(R1)
DKCU-25-44	1K Ohm 1/4W Resistor	(R2, R12, R15, R15, R18, R22)
DKCU-25-45	51 Ohm 1/4W Resistor	(R3, R4, R11, R15, R17, R19, R21, R23)
DKCU-25-46	12 Ohm 1/2W Resistor	(R5, R8, R20, R24, R6, R26)
DKCU-25-47	470 Ohm 1/4W Resistor	(R10)
DKCU-25-48	22 Ohm 1/2W Resistor	(R13)
DKCU-25-49	20K Ohm 1/2W Resistor	(R16, R25)
DKCU-25-50	100 Ohm 1/2W Resistor	(R27)
DKCU-25-51	20 Ohm 5W Resistor	(R9)
DKCU-25-52	510 Ohm 3W Resistor (Metal Oxide)	(R7)
DKCU-25-53	50K Ohm GP06P Variable Resistor	(VR2, VR4)
DKCU-25-54	2K Ohm GP06P Variable Resistor	(VR1, VR3)
DKCU-25-55	5m Ohm Shunt Resistor	(SH1, SH2)
DKCU-25-56	SC-02 SC Coil	(L1)

4. Power P.C.Board

No.	Name of Parts	Q'ty	Remarks	FOB Japan per pc.
DJR-18-01	(PP-7B) Power P.C.Board	1	Complete Set	
DJR-18-02	Transistor	1	2SC2555	
DJR-18-03	Transistor	2	2SA817	
DJR-18-04	Transistor	1	2SC2535	
DJR-18-05	Transistor	1	2SA1015	
DJR-18-06	Fast Recovery Center Tap Diode	1	CTU-2S	
DJR-18-07	Shot Key Diode	2	CTB33S	
DJR-18-08	Silicon Rectifier Diode	1	S4VB40 4A 400VW	
DJR-18-09	Silicon Rectifier Diode	1	1B4B41	
DJR-18-10	Hybrid IC	2	3D-1001	
DJR-18-11	3 Terminals Regulators	1	7824	
DJR-18-12	3 Terminals Regulators	1	7812	
DJR-18-13	Thyristors	1	5P4M	
DJR-18-14	Thyristors	1	03P05M	
DJR-18-15	Diode	4	1S954	
DJR-18-16	Diode	4	10DF-4	
DJR-18-17	Photo Coupler	1	PC614	
DJR-18-18	Zener Diode	1	05Z5.6U	
DJR-18-19	Zener Diode	1	05Z5.1L	
DJR-18-20	Zener Diode	1	05Z5.6Z	
DJR-18-21	Ceramic Capacitor	3	DE0707B471K2K 470pF2KV	
DJR-18-22	Ceramic Capacitor	1	0.1MF 50V	
DJR-18-23	Film Capacitor	3	MDD2J473M 0.047MF 630VW	
DJR-18-24	Film Capacitor	2	0.01MF 50V	
DJR-18-25	Film Capacitor	2	1000pF 50V	
DJR-18-26	Aluminum Electrolytic Capacitor	1	1000MF 50V	
DJR-18-27	Aluminum Electrolytic Capacitor	2	47MF 35V	
DJR-18-28	Aluminum Electrolytic Capacitor	7	47MF 16V	
DJR-18-29	Aluminum Electrolytic Capacitor	4	3300MF 10V	
DJR-18-30	Aluminum Electrolytic Capacitor	2	100MF 25V	
DJR-18-31	Aluminum Electrolytic Capacitor	5	10MF 16V	
DJR-18-32	Aluminum Electrolytic Capacitor	2	330MF 200V	
DJR-18-33	Aluminum Electrolytic Capacitor	1	1000MF 25V	
DJR-18-34	Resistor (Coil Winding)	1	20 OHM 2W	
DJR-18-35	Resistor (Carbon)	5	1K OHM ¼W±5%	
DJR-18-36	Resistor (Carbon)	8	51 OHM ¼W±5%	
DJR-18-37	Resistor (Carbon)	6	12 OHM ½W±5%	
DJR-18-38	Resistor (Carbon)	1	470 OHM ¼W±5%	
DJR-18-39	Resistor (Carbon)	1	22 OHM ½W±5%	
DJR-18-40	Resistor (Carbon)	2	20K OHM ½W±5%	

No.	Name of Parts	Q'ty	Remarks	FOB Japan per pc.
DJR-18-41	Resistor (Carbon)	1	100 OHM ½W	
DJR-18-42	Resistor (Cement)	1	20 OHM 5W	
DJR-18-43	Resistor (Metal Oxide)	1	510 OHM 3W	
DJR-18-44	Variable Resistor	2	50K OHM GF06P	
DJR-18-45	Variable Resistor	2	2K OHM GF06P	
DJR-18-46	Shunt Resistor	2	5m OHM	
DJR-18-47	SC Coil	1	SC-02	
DJR-18-48	SF Coil	2	100MH 5A	
DJR-18-49	SF Coil	2	800MH 2A	
DJR-18-50	Oscillator Transformer	1	EC-35 Type 3D-0097	
DJR-18-51	Oscillator Transformer	1	EI-30 Type 3D-0097	
DJR-18-52	Oscillator Transformer	2	EE-16 Type 3D-1000	
DJR-18-53	Fuse Element	1	FGMB 4A 125V NR Type	

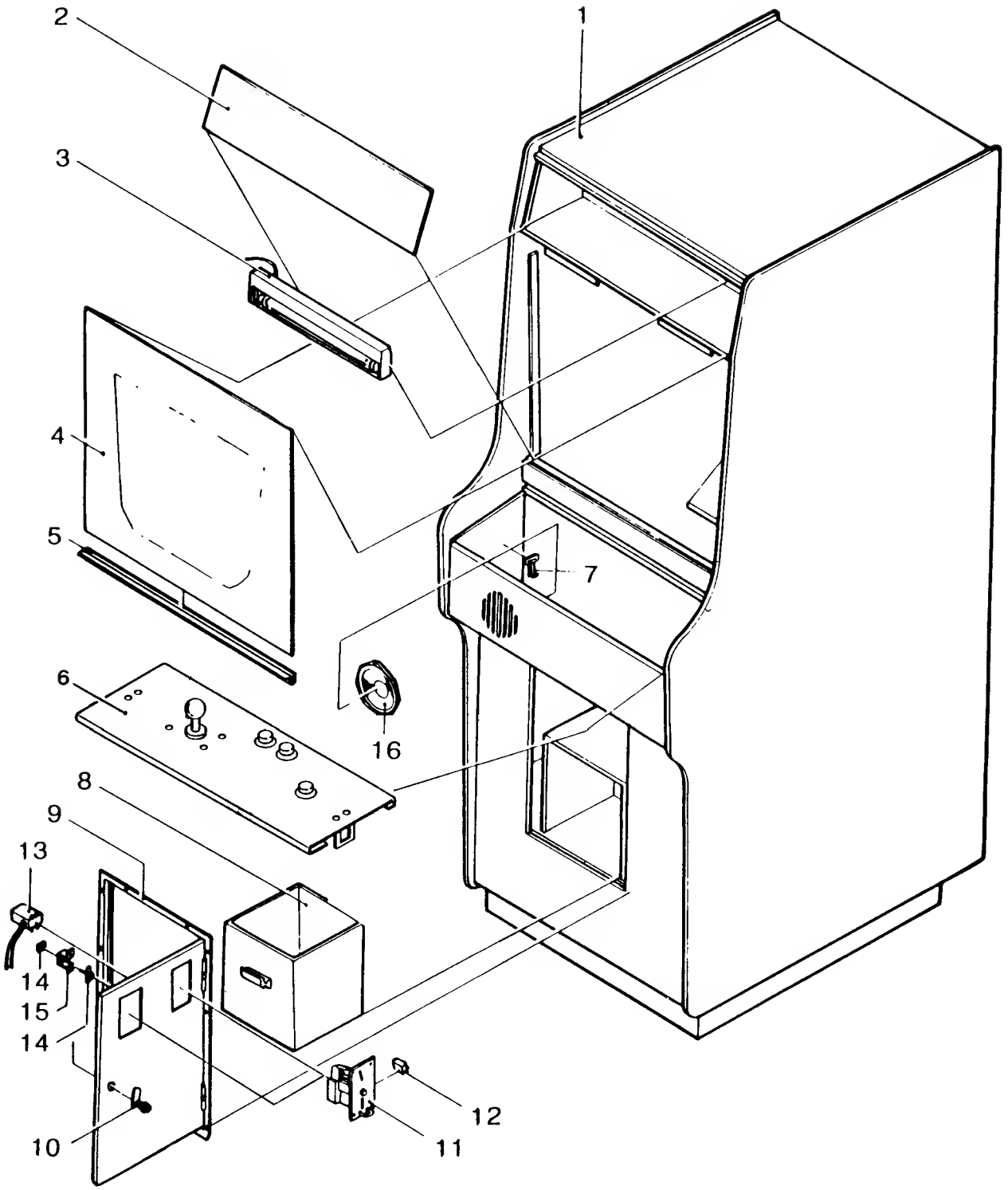

Front View of Game Cabinet

Fig. 1

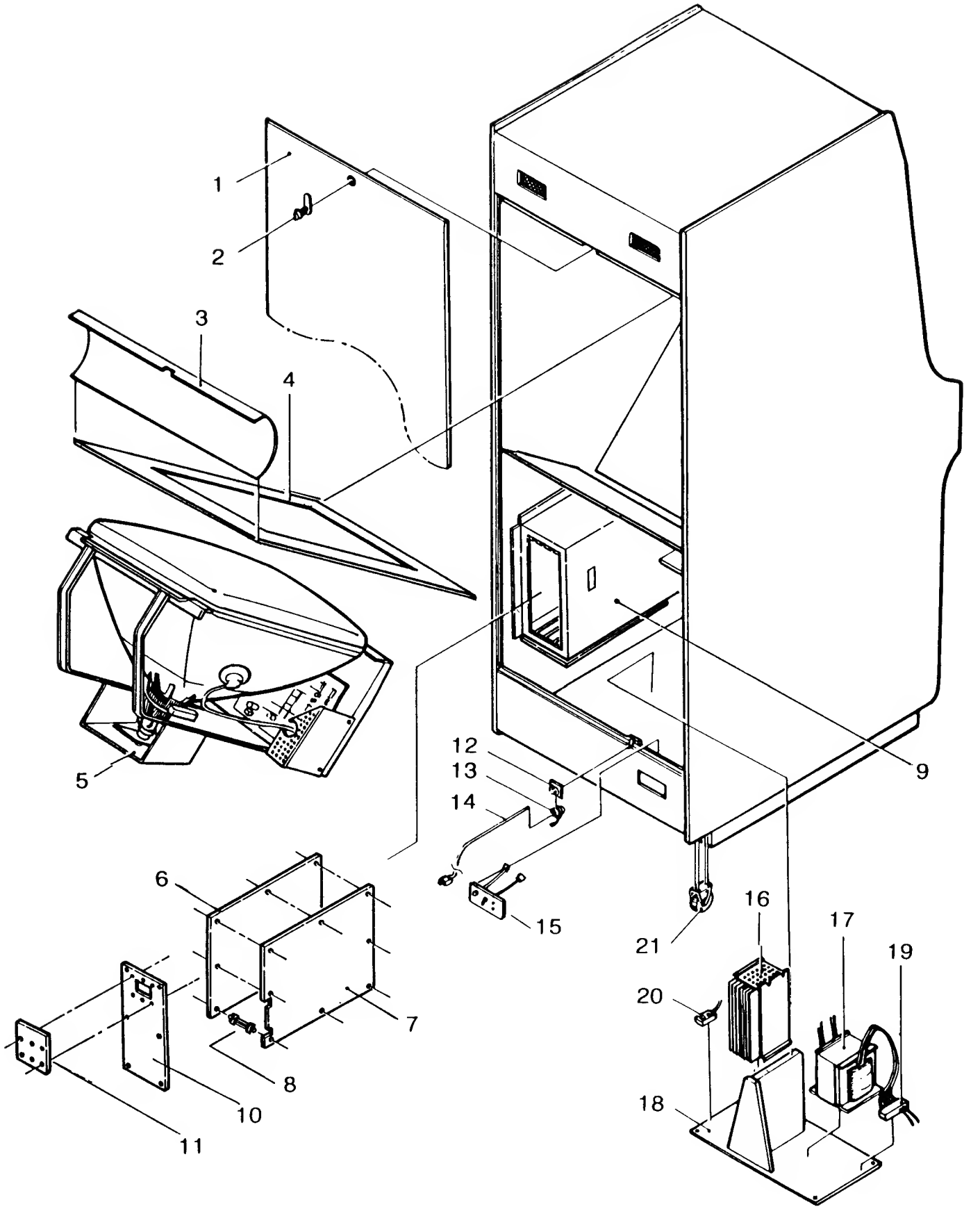

Rear View of Game Cabinet

Fig. 2

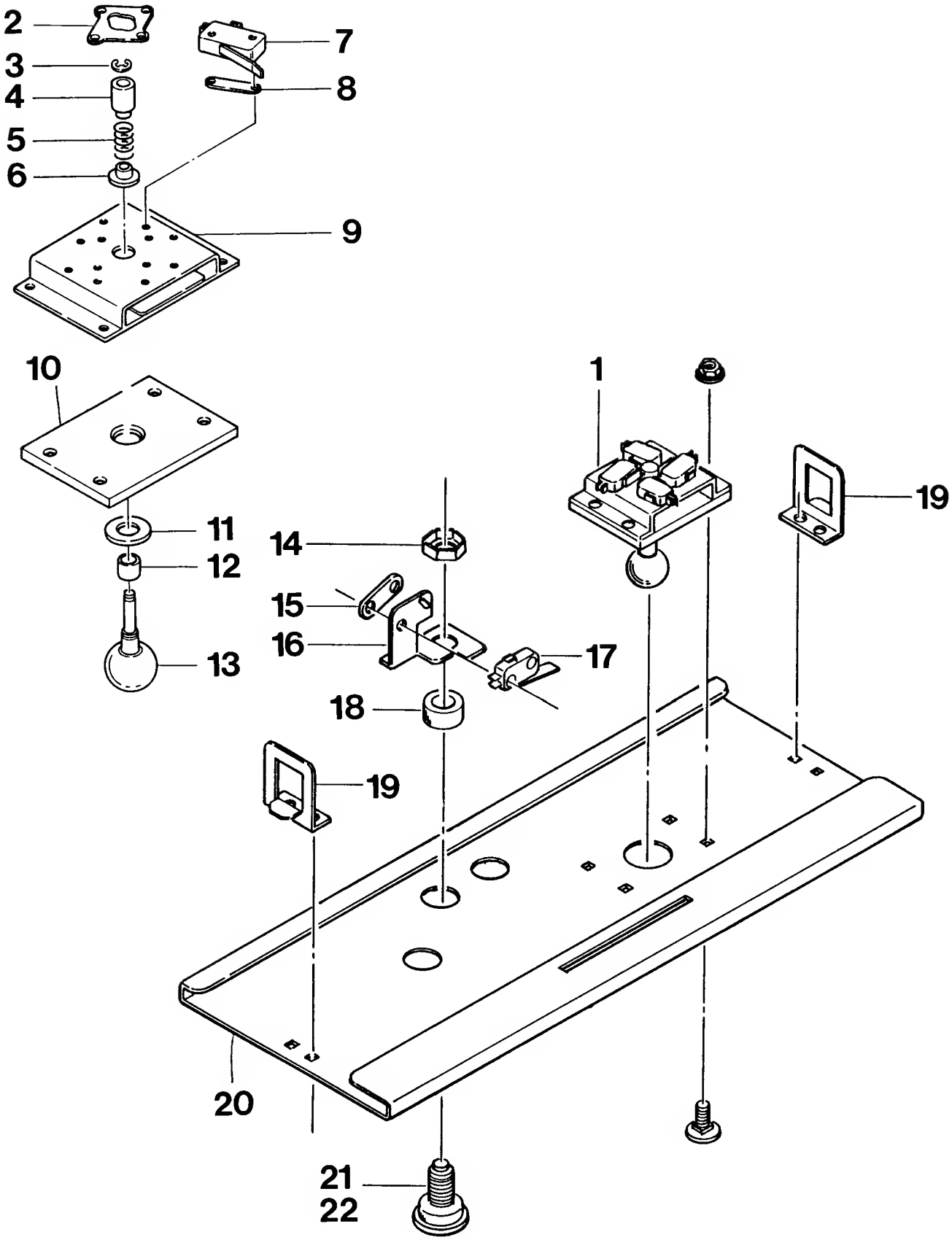

Fig. 3

PRINTED IN U.S.A.