U T S R P N M L K J H F E D C B A

JAMMA

CN2

CN1

XC5E-6421 / XC2E-6411

XC5E-6421 / XC2E-6411

SW1

SW2

RADIATOR

IC201 MB3730A

IC202 YM2151

IC203 PAL16L8

IC204 YM3014

IC205 LM358

IC26 LS181

IC27 LS181

IC28 LS00

IC29 LS393

IC30 LS04

IC31 LS00

IC32 LS86

IC33 PAL16L8

IC34 LS374

IC35 LS374

IC36 LS273

IC37 LS273

IC38 MB1202

IC39 μPD71088C

IC40 LS373

IC41 LS245

IC42 LS373

IC43 μPD71088C

IC44 μPD71011C

IC45 PAL16L8

IC46 μPD70116C

IC47 LS245

IC48 LS373

IC49 CUSTOM LSI

IC50 2M ROM

IC51 2M ROM

IC52 64KSRAM

IC53 IMROM

IC54 IMROM

IC55 LS244

IC56 LS244

IC57 ROM

IC58 64KSRAM

IC59 IMROM

IC60 IMROM

IC61 LS245

IC62 CUSTOM LSI

IC63 ROM

IC64 ROM

IC65 ROM

IC66 ROM

IC7 64KSRAM

IC8 64KSRAM

IC9 64KSRAM

IC10 64KSRAM

IC11 LS244

IC12 LS32

IC13 LS367

IC14 IMROM

IC15 LS244

IC16 LS244

IC17 27512

IC18 Z80A

IC19 LS244

IC20 LS244

IC21 LS244

IC22 LS244

IC23 LS244

IC24 LS244

IC25 LS244

IC1 LS175

IC2 LS74

IC3 LS74

IC4 LS368

IC5 PAL16L8

IC6 LS374

ITEM	R/S	DESCRIPTION	MATERIAL	MATERIAL CODE	REMARK

TOLERANCE

NANAO NANAO CORPORATION

TITLE: M84-A-A マウント図

DATE	DRAWN	CHECKED	DESIGNED	APPROVED
89.10.27	横山	1.10.27		1.10.27

SCALE NTS /

DRAW NO. 5U04089 L

3RD ANGLE PROJECTION | DIM IN mm | SHEET /

M84-A-A MADE IN JAPAN

MOR311V-0

3RD ANGLE PROJECTION	DIM IN mm	SHEET

TOLERANCE		ITEM	R/S	DESCRIPTION	MATERIAL	MATERIAL CODE	REMARKS

NANAO CORPORATION

DATE	DRAWN	CHECKED	DESIGNED	APPROVED
89.10.02	藤山	1.10.27		1.10.27

SCALE NTS

TITLE M84-B-A 実装図

DRAW NO. 510490

MDK3111-0

M84-B-A MADE IN JAPAN

PAL16L8

IC1 CUSTOM LSI

IC2 CUSTOM LSI

IC3 ALS374 IC4 ALS374 IC5 ALS374 IC6 ALS374 IC7 CUSTOM LSI IC8 ALS00

IC9 IC10 LS32 IC11 LS74 IC12 TMM2018-35 IC13 TMM2018-35 IC14 TMM2018-35 IC15 TMM2018-35 IC16 ALS74 IC17 S158 IC18 S04 IC19 ALS08 IC20 ALS08

IC21 IM. MASK ROM IC22 ROM IC23 TBP24S10N IC24 TBP24S10N

IC25 TMM2018-45 IC26 TMM2018-45 IC27 LS244 IC28 LS244

IC29 CUSTOM LSI IC30 CUSTOM LSI IC31 ROM IC32 ROM IC33 CUSTOM LSI

IC34 CUSTOM LSI IC35 TMM2018-45 IC36 TMM2018-45 IC37 LS245 IC38 LS245

X1 32.0MHz

R1 R2 R3 R4 R5 R6 RA1 RA2 RA3

J1 J2 OTHER 2M.ROM OTHER

CN1 XC58-6441 / XC48-6441

CN2 XC58-6442 / XC48-6442

NANAO CORPORATION

TITLE

M84-A-A (1/5)

DATE | DRAWN | CHECK | DESIGN | APPROV

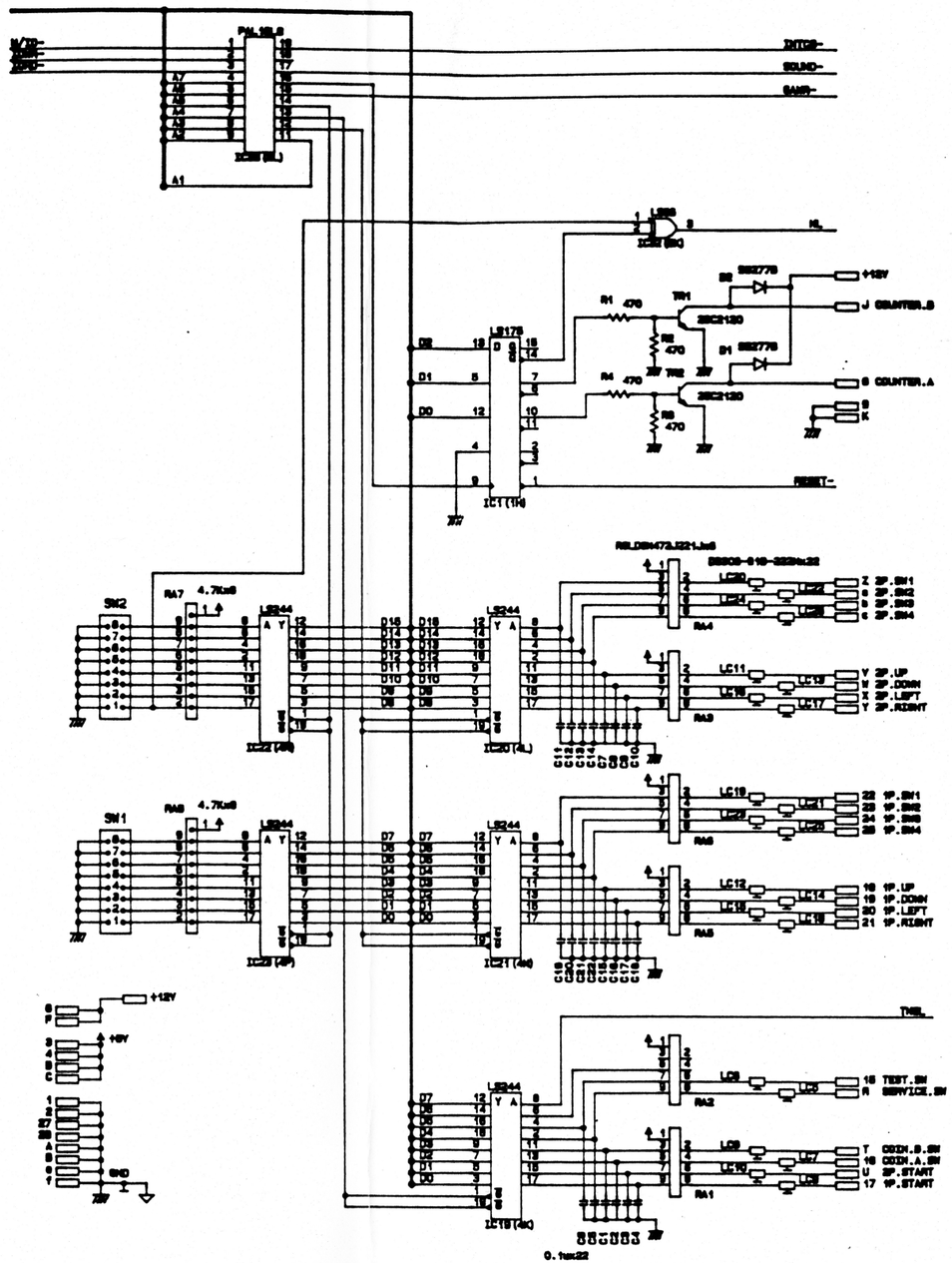

NANAO CORPORATION	TITLE	M84-A-A	(2/5)
DATE	DRAWN / CHECK / DESIGN / APPROV		

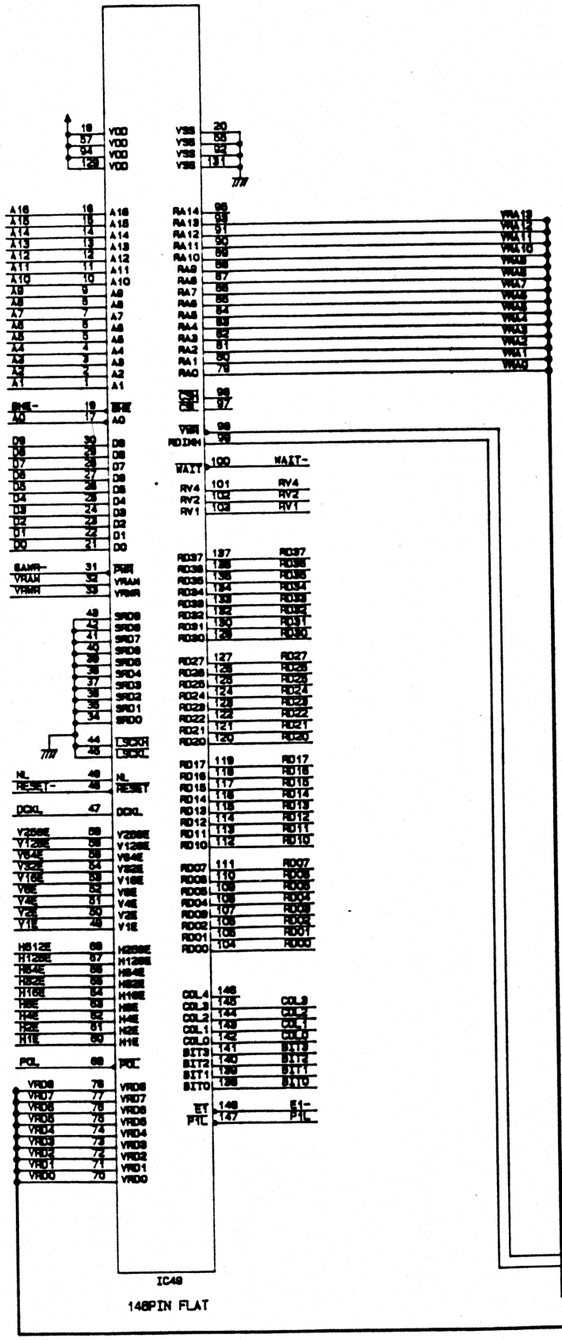

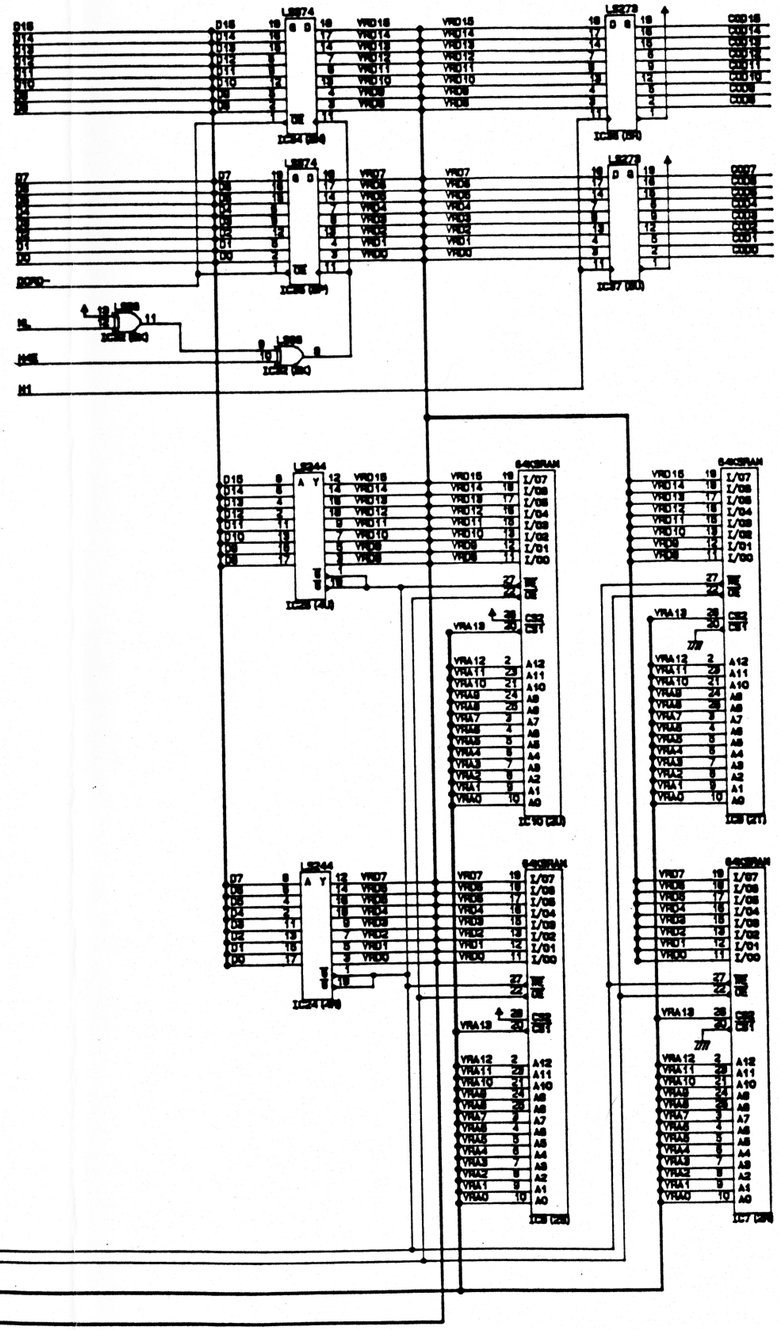

NANAO CORPORATION	TITLE	M84-A-A	(3/5)
DATE '89. 11. 15	DRAWN	CHECK	DESIGN	APPROV	DWG NO.	E-C4004
BEGIN DATE '89. 9. 1				1.11.16		

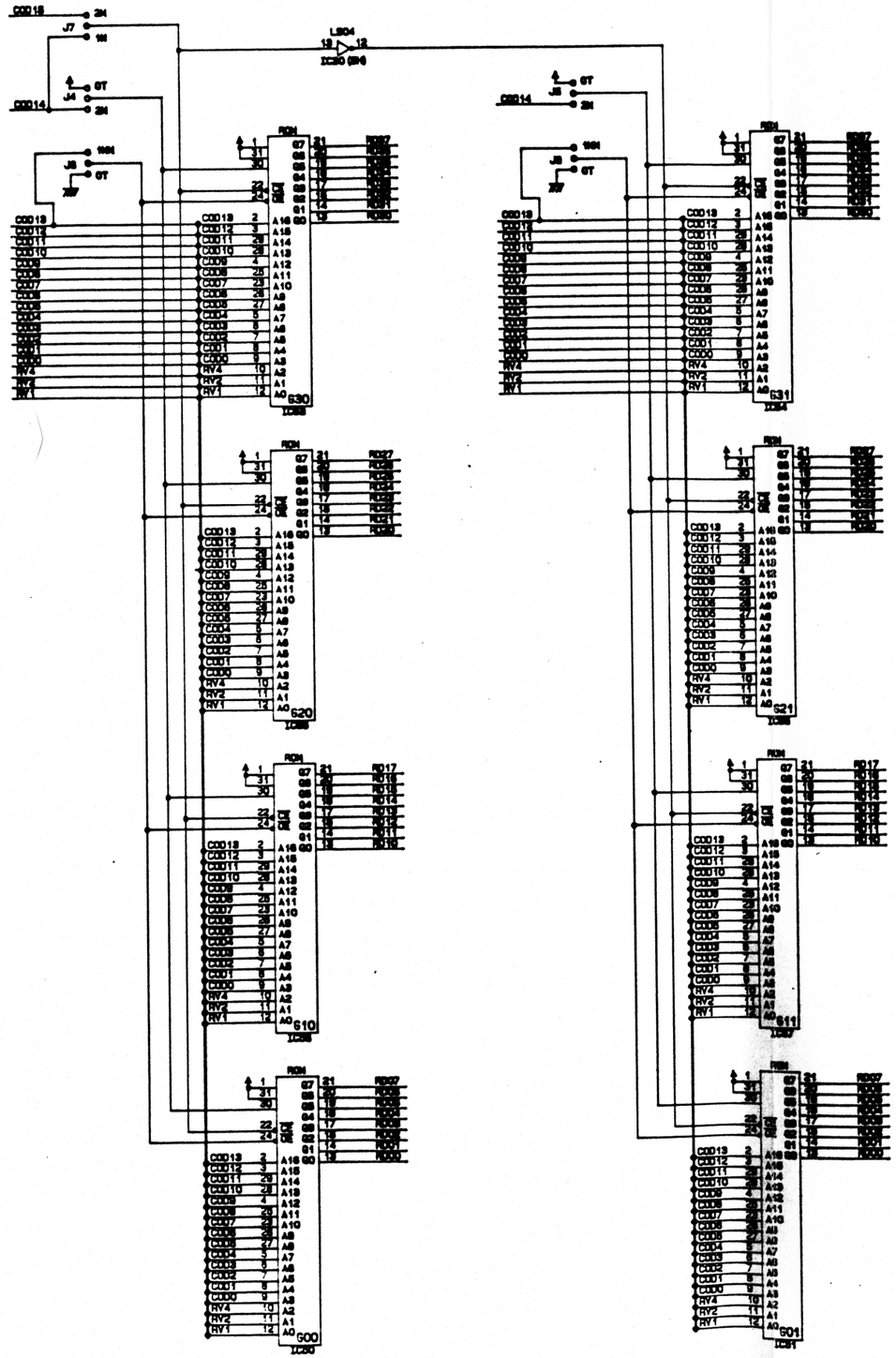

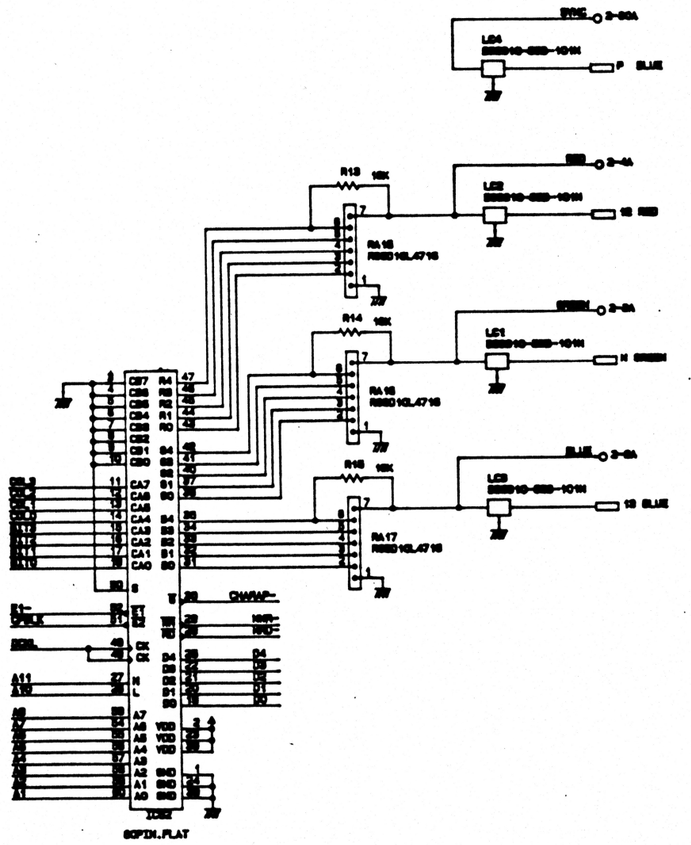

NANAO CORPORATION					TITLE M84-A-A (A/B)
DATE '92. 11. 15	DRAWN	CHECK	DESIGN	APPROV	DRAW NO. E-C4004
REVISION DATE '92. 12. 1				1.	

NANAO CORPORATION		TITLE	M84-A-A (5/5)
DATE '89. 11. 15	DRAWN / CHECK / DESIGN / APPRV.	DRAW NO.	E-C4004
REVIN. DATE			

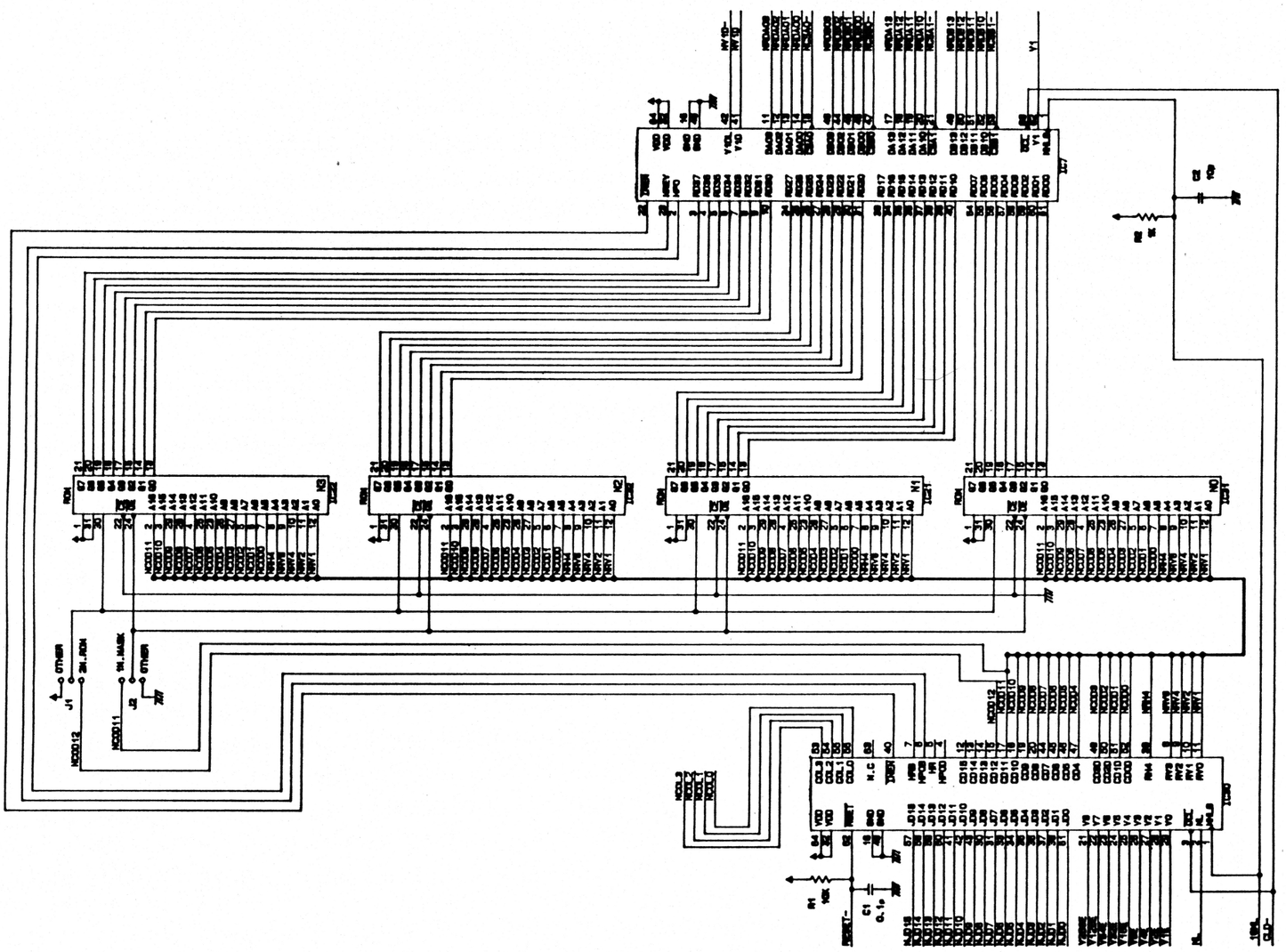

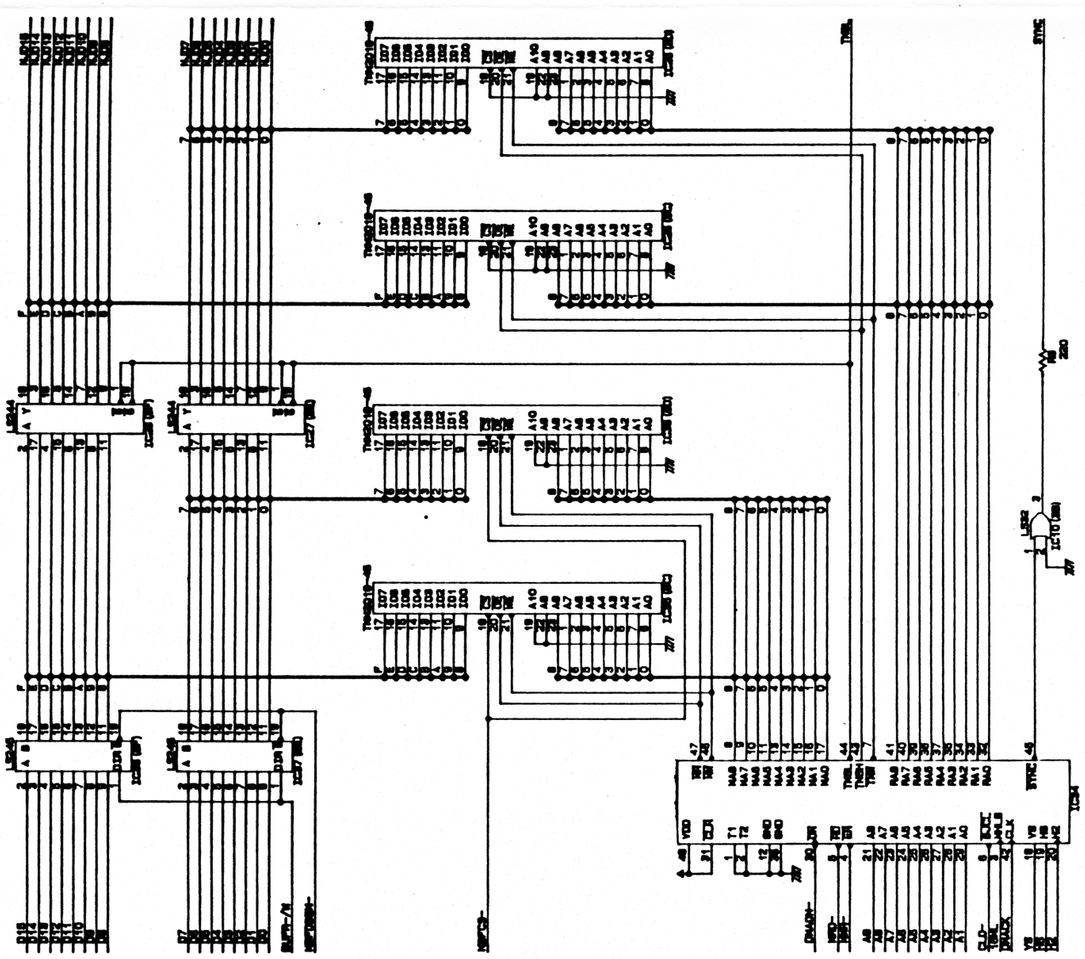

NANAO CORPORATION

TITLE M84-B-A (1/7)

DATE

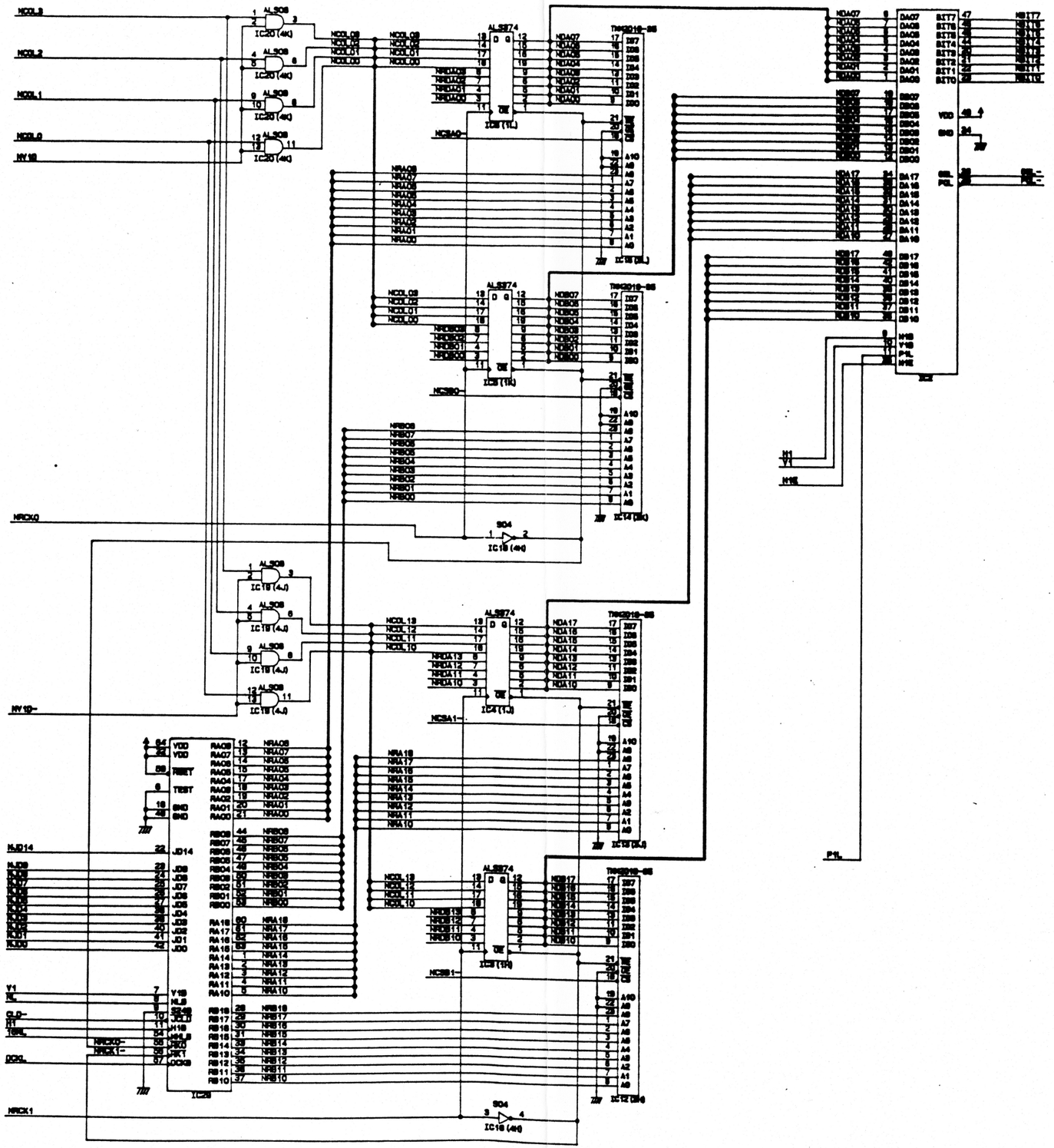

NANAO CORPORATION		TITLE	M84-B-A (2/3)
DATE '89. 11. 15	DRAWN / CHECK / DESIGN / APPROV	DRAW NO.	E-C4005
REVISE DATE			

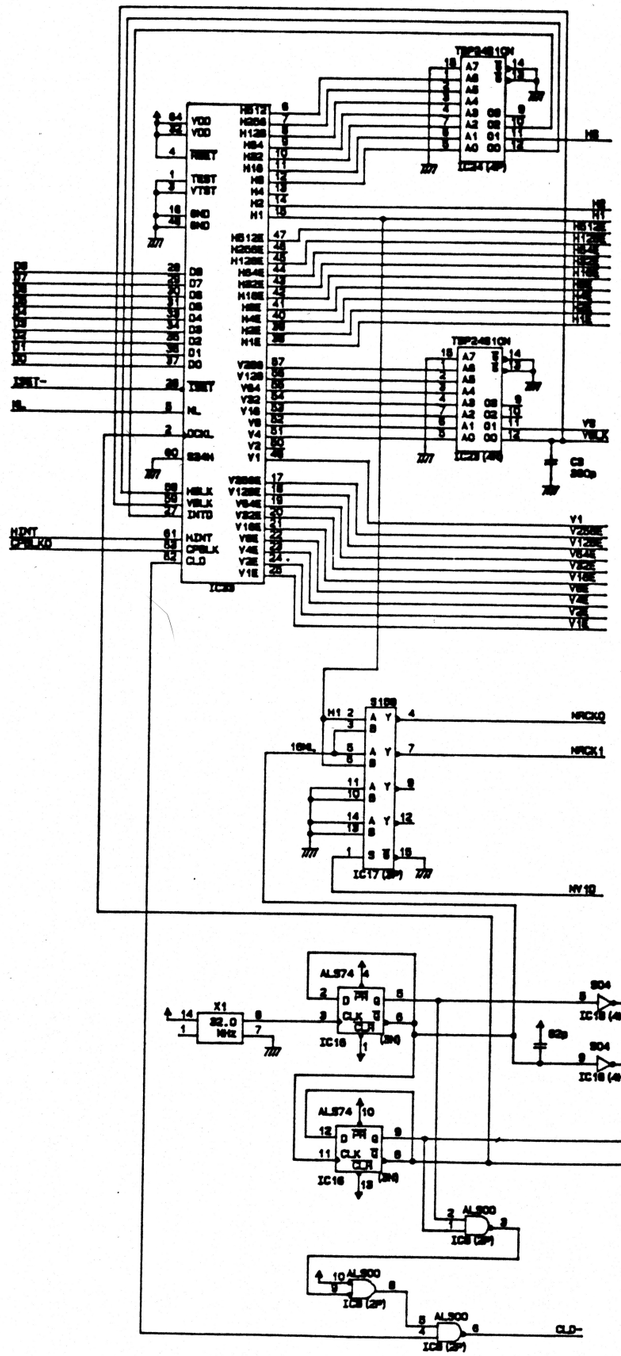

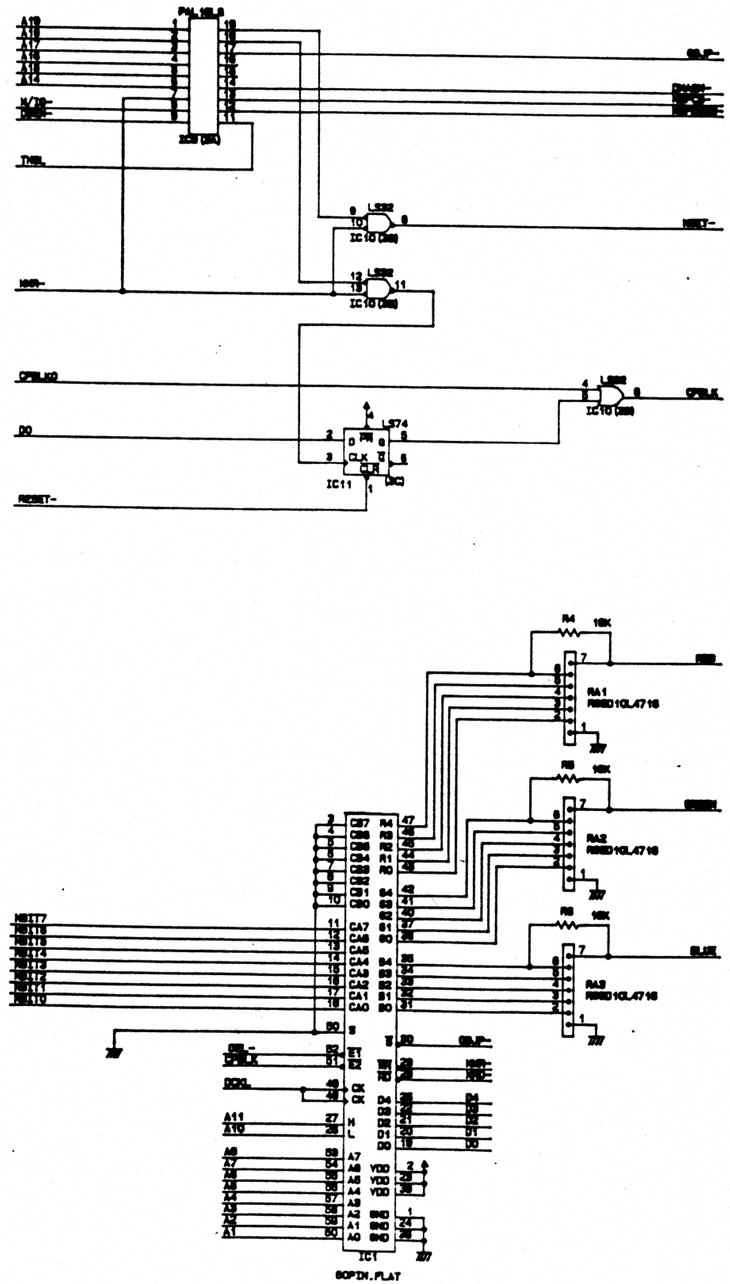

NANAO CORPORATION | TITLE | M84-B-A (3/3)
DATE | DRAWN | CHECK | DESIGNED | APPROV

JAMMA CONNECTOR

HANDA-MEN		BUHIN-MEN
GND	1	GND
GND	2	GND
+5V	3	+5V
+5V	4	+5V
	5	
+12V	6	+12V
	7	
COUNT.B	8	COUNT.A
GND	9	GND
SP-	10	SP+
GND	11	AUDIO
GREEN	12	RED
SYNC	13	BLUE
SERVICE	14	GND
	15	TEST
COIN.B	16	COIN.A
2P.START	17	1P.START
2P.UP	18	1P.UP
2P.DOWN	19	1P.DOWN
2P.LEFT	20	1P.LEFT
2P.RIGHT	21	1P.RIGHT
2P.SW1	22	1P.SW1
2P.SW2	23	1P.SW2
2P.SW3	24	1P.SW3
2P.SW4	25	1P.SW4
	26	
GND	27	GND
GND	28	GND

C N 1

A		B
A1	1	A2
A3	2	A4
A5	3	A6
A7	4	A8
A9	5	A10
A11.	6	A12
A13	7	A14
A15	8	A16
A17	9	A18
A19	10	BUFR-/W
D0	11	+5V
D1	12	+5V
D2	13	+5V
D3	14	+5V
D4	15	+5V
D5	16	+5V
D6	17	+5V
D7	18	+5V
D8	19	+5V
D9	20	+5V
D10	21	+5V
D11	22	+5V
D12	23	+5V
D13	24	+5V
D14	25	+5V
D15	26	+5V
MWR-	27	+5V
MRD-	28	+5V
DBEN-	29	+5V
M/IO-	30	+5V
HINT	31	+5V
VBLK	32	+5V

C N 2

A		B
CPBLK	1	GND
BLUE	2	GND
GREEN	3	GND
RED	4	GND
V256E	5	GND
V128E	6	GND
V64E	7	GND
V32E	8	GND
V16E	9	GND
V8E	10	GND
V4E	11	GND
V2E	12	GND
V1E	13	GND
H1	14	GND
16MH	15	GND
V1	16	GND
POL	17	GND
P1L	18	GND
H512E	19	GND
H128E	20	GND
H64E	21	GND
H32E	22	GND
H16E	23	GND
H8E	24	GND
H4E	25	GND
H2E	26	GND
H1E	27	GND
DCKL	28	GND
NL	29	GND
SYNC	30	GND
RESET-	31	GND
TNSL	32	GND

NANAO CORPORATION

DATE	DESIGN	CHECK	DRAWN	APPROV
'92 11: 15				
REVISION DATE				
'92 9: 1				

TITLE: M84.CONNECTION

DRAWING NO.: E-C4006