KONAMI®

SUNSETRIDERS

©KONAMI 1991 ™

Service #

708-215-5100

Jerry Korbecki ext. 122

INSTRUCTION MANUAL

KONAMI® is a trademark of Konami Industry Co., Ltd.

Sunsetriders is a registered trademark of Konami Co. LTD. © 1991 Konami Co. Inc.

Part No. 064400

SUNSETRIDERS™ PARTS LIST

Part #	Description
072010	AC Harness
064011	DC Harness
064003	Sunsetrider PCB
064100	Sunsetrider Control Panel Overlay
064101	Instruction Decal (w/arrows)
064200	Marquee
064300	Upper Right Side Decal
064301	Upper Left Side Decal
064302	Middle Right Side Decal
064303	Middle Left Side Decal
064304	Lower Right Side Decal
064305	Lower Left Side Decal
064400	Manual
30255	Red Button
30256	Yellow Button
30258	Blue Button
30259	Green Button
30313	Red Micro Joystick
30314	Blue Micro Joystick
30315	Green Micro Joystick
30316	Yellow Micro Joystick
35404	Power Supply
40356	Tempered Glass
40524	Monitor

CONTROL PANEL ASSEMBLY

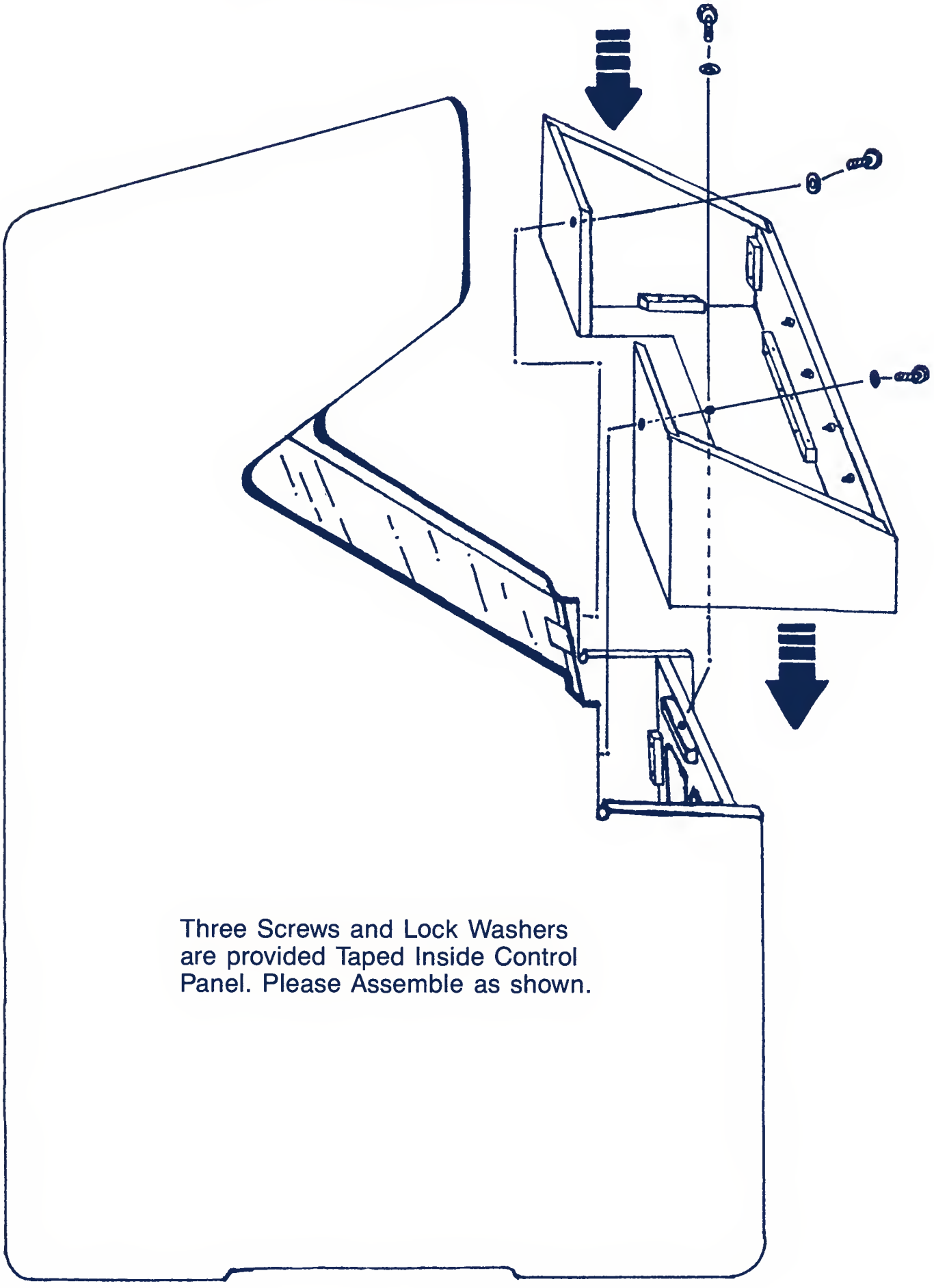

Three Screws and Lock Washers are provided Taped Inside Control Panel. Please Assemble as shown.

SUNSETRIDERS™ TECHNICAL INFORMATION

TECHNICAL INFORMATION

(1) Required power capacity
GND-Vcc 5V 4A or more
GND-(+12V)
*See the Wiring Diagram.
(2) Output
R (red) analog, positive
G (green) analog, positive
B (blue) analog, positive
SYNC. H-V complexed, negative
(3) The monitor should be horizontally installed.
(4) Use the volume knob on the PCB to adjust sound level. Turn the knob clockwise for increased volume. In monaural output mode, use the left volume knob.
(5) Handle with care.

PLAY INSTRUCTION

- 1 to 4 players can play at the same time.
- Decide the character you want to control out of the four Bounty Hunters. Two of them use pistols as their weapons, the others use rifles. Deposit coin(s) in coin slot of your favorite character and press SHOOT or JUMP button to start the game.
- Control your character using the 8-way JOYSTICK. Use JUMP button to get over obstacles. Press SHOOT button to attack enemies. Enemies can also be destroyed by shooting down barrels and lamps aimed at them.
- To jump up to the second floor, push JOYSTICK upward and press JUMP button. To jump down, pull down JOYSTICK and press JUMP button.
- To avoid enemies' bullets, you can slide by pressing JUMP button with JOYSTICK pulled diagonally downward.
- Shoot sacks, and gold and silver badges come out. Pick them up for power-up:
  Gold badge: QUICK DRAW. . . Keep SHOOT button pressed to fire consecutively.
  Silver badge: TWO-GUNS. . . You can fire in two directions.
- Pick up gold dust and roast-chickens for additional points. Extra points are also awarded for picking up the same power-up item you already have.
- You will lose a life when you are hit by enemies' bullets, runaway bulls, falling barrels and flames, etc. The game is over when you have lost all your lives.
- There are eight stages and two bonus stages. A large reward is given you for defeating the boss enemy in each stage. In bonus stages, aim and shoot the enemies coming out in eight different positions. Shoot as many enemies as possible for maximum reward.
- Continuation is available as long as you continue to add coins when necessary. Any player can join at anytime.

CABINET INFORMATION

(1) Use a multi-control upright cabinet with four sets of an 8-way joystick and two function buttons.
(2) Four independent coin slots are necessary. Start buttons are substituted by the function buttons for each player.



8-Way Joystick | Shoot Button | Jump Button

SELF TEST

Normal: "OK" will be displayed. Then the game will start.

Abnormal: "BAD" will be displayed and self test will repeat. If "EEPROM 15B BAD" is displayed, switch off and switch on again with TEST SWITCH (on the PCB) pressed.

MANUAL TEST

(1) HOW TO START

After switching on the power, press the TEST SWITCH on the PCB or on the cabinet, and you will get the MAIN MENU of the Manual Test.

NOTE: Switching on with TEST SWITCH pressed causes the program in the EEPROM to be initialized to default.

(2) HOW TO RETURN TO THE GAME MODE

Select "GAME MODE" on the MAIN MENU, then press 1 SHOOT button to return to the game mode.

(3) ITEMS AND HOW TO SELECT

Use player 1 JOYSTICK to highlight desired test and press player 1 SHOOT button to initiate testing. Press player 1 SHOOT button during or at the end of each test to return to the MAIN MENU.

```
I/O CHECK
SCREEN CHECK
COLOR CHECK
SOUND CHECK
MASK ROM CHECK
GAME OPTIONS
COIN OPTIONS
GAME MODE

1 PLAYER JOYSTICK = SELECT ITEM
1 PLAYER SHOOT = DO CHECK
```

(4) EXPLANATION OF THE ITEMS

1. I/O CHECK
   Check all the joysticks and buttons to see "1" when switched on. Press player 1 and 2 SHOOT buttons at the same time to return to MAIN MENU.
2. SCREEN CHECK
   Adjust focus, alignment, size, etc. using the cross-hatch screen.
3. COLOR CHECK
   Adjust color brightness so that the specified area will be colorless.
4. SOUND CHECK
   When "SOUND SCALE CHECK" is highlighted, a music scale sounds. At "SOUND CODE," push player 1 JOYSTICK right/left to change sound code.
5. MASK ROM CHECK
   Roms will be checked one after another, and the message "OK" or "BAD" will be displayed on the screen.

6. GAME OPTIONS
Following screen will appear. Use player 1 JOYSTICK up/down to select the item and push JOYSTICK right/left to modify setting. Factory settings are shown in green, and modified results in red.

After modification is completed, highlight "SAVE AND EXIT" and press player 1 SHOOT button to save and return to MAIN MENU.

GAME OPTIONS

PLAYER'S LIFE	1 CREDIT 3 LIVES	. . . Select from 1 to 9 lives.
DIFFICULTY LEVEL	4/MEDIUM	. . . Select out of 8 levels.
VIDEO SCREEN FLIP	NORMAL	. . . "NORMAL" or "UPSIDE DOWN"
SOUND OUTPUT	STEREO	. . . "STEREO" or "MONAURAL"
SOUND IN ATTRACT MODE	ON	. . . "ON" or "OFF"
FACTORY SETTINGS		. . . All the settings return to default.
SAVE AND EXIT		. . . Save the modified settings
EXIT		

1 PLAYER JOYSTICK UP/DOWN=SELECT OPTION
1 PLAYER JOYSTICK RIGHT/LEFT=MODIFY SETTING

* If you select "EXIT" instead of "SAVE AND EXIT" after modifying some settings, the message appears: "YOU DID NOT SAVE. DO YOU WANT TO SAVE? YES/NO." When you choose "YES" the screen shows "NOW SAVING" and returns to MENU SCREEN. If you select "NO," "NO MODIFICATION" is shown and then MENU SCREEN appears.

7. COIN OPTIONS
Selecting this item, the screen shows following options.

COIN OPTIONS

FREE PLAY	NO	
PREMIUM START	YES 1	. . ."NO" or "YES 1" to "YES 4" (The number means the *EXTRA* coins necessary)
STARTING	2 COINS 1 CREDIT	
CONTINUATION	1 COIN 1 CREDIT	
FACTORY SETTINGS		} Same as above "GAME OPTIONS"
SAVE AND EXIT		
EXIT		

1 PLAYER JOYSTICK UP/DOWN=SELECT OPTION
1 PLAYER JOYSTICK RIGHT/LEFT=MODIFY SETTING

When you want "PREMIUM START" setting, choose the number of extra coins necessary for starting, then decide the coin setting for continuation. The number of coins for starting will be the sum of both numbers. If you do not want premium start setting, the number of coins necessary for starting and continuation will be the same.

*COIN SETTING OPTIONS

COIN (S)	1	1	1	1	1	1	1	2	2	2	3	3	3	4	4	4
CREDIT (S)	1	2	3	4	5	6	7	1	3	5	1	2	4	1	3	5

AC WIRING HARNESS

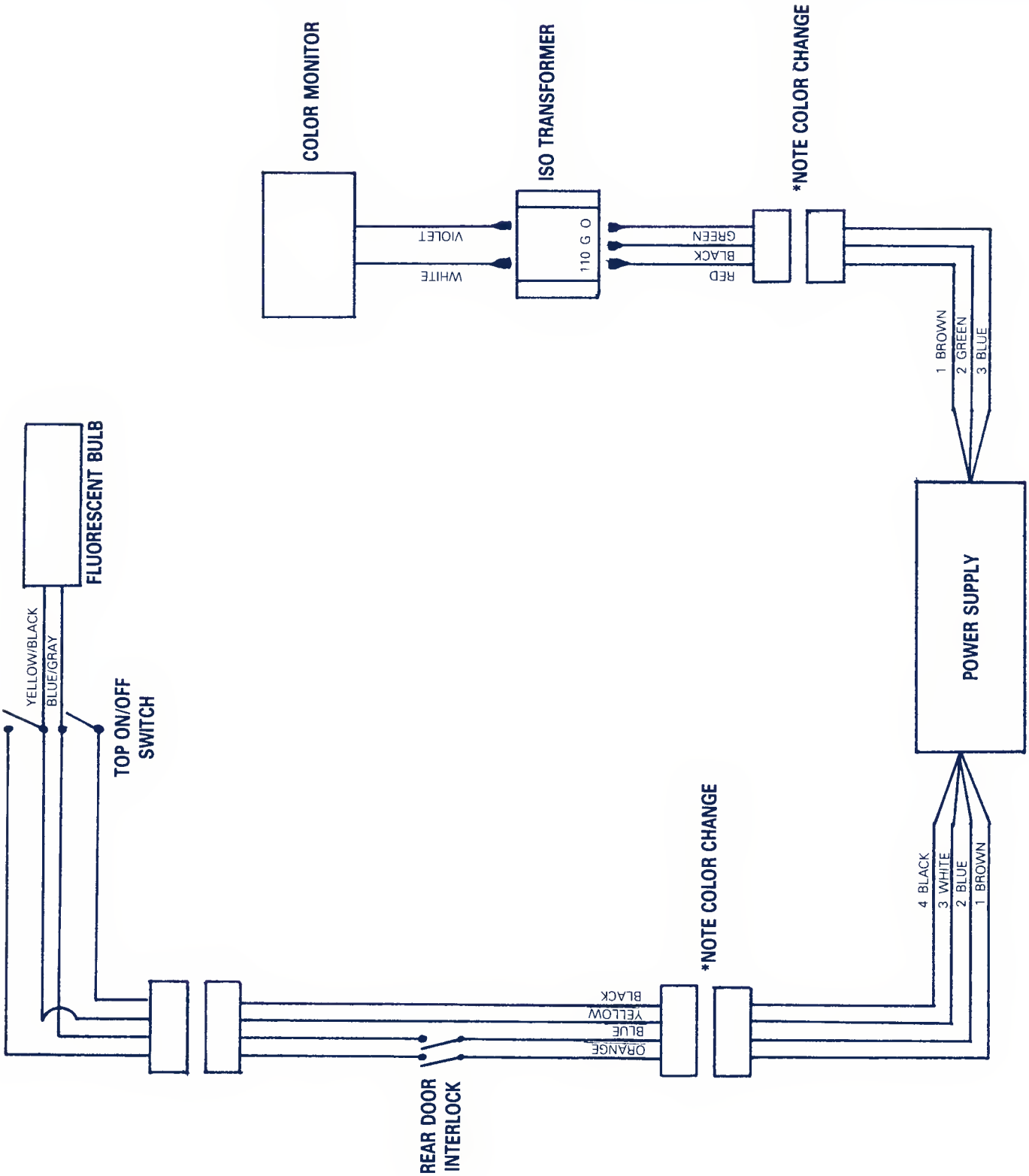

SUNSETRIDER™: SUB HARNESS FOR 3 PLAYERS & 4 PLAYERS

CN3 3P CONTROLS

1	Coin 3	White/Violet
2	Empty	
3	3P Left	White/Red
4	3P Right	White/Yellow
5	3P Up	White/Black
6	3P Down	White/Blue
7	3P Shoot	White/Brown
8	3P Jump	White/Orange
9	Empty	
10	Empty	
11	Empty	
12	Empty	
13	Empty	
14	Empty	
15	Ground	Black

CN4 4P CONTROLS

1	Coin 4	Blue
2	Empty	
3	4P Left	Yellow/Black
4	4P Right	Brown/Black
5	4P Up	Green/Yellow
6	4P Down	Yellow/Red
7	4P Shoot	Yellow/White
8	4P Jump	Yellow/Blue
9	Empty	
10	Empty	
11	Empty	
12	Empty	
13	Empty	
14	Empty	
15	Ground	Black

SUNSETRIDER™: WIRING HARNESS

WIRE COLOR KEY:	Solder Side ←		→ Parts Side		
BLACK	GND	A	1	GND	BLACK
BLACK	GND	B	2	GND	BLACK
RED	+5V DC	C	3	+5V DC	RED
RED	+5V DC	D	4	+5V DC	RED
	NOT USED	E	5	NOT USED	
ORANGE	+ 12V DC	F	6	+ 12V DC	ORANGE
	*KEY	H	7	*KEY	
	(EMPTY)	J	8	COIN COUNTER	GREEN/VIOLET
	(EMPTY)	K	9	(EMPTY)	
	(EMPTY)	L	10	(EMPTY)	
	(EMPTY)	M	11	(EMPTY)	
WHITE/GREEN	VIDEO GREEN	N	12	VIDEO RED	RED/WHITE
WHITE	VIDEO SYNC	P	13	VIDEO BLUE	BLUE/WHITE
	(EMPTY)	R	14	VIDEO GROUND	BLACK
	(EMPTY)	S	15	TEST	YELLOW
VIOLET/WHITE	COIN 2	T	16	COIN 1	BLUE/BROWN
	NOT USED	U	17	(EMPTY)	
BLUE/YELLOW	2P UP	V	18	1P UP	ORANGE/WHITE
VIOLET/YELLOW	2P DOWN	W	19	1P DOWN	BLACK/WHITE
ORANGE/GREEN	2P LEFT	X	20	1P LEFT	RED/GRAY
ORANGE/YELLOW	2P RIGHT	Y	21	1P RIGHT	GRAY/WHITE
BLACK/YELLOW	2P SHOOT	Z	22	1P SHOOT	RED/WHITE
ORANGE/GRAY	2P JUMP	a	23	1P JUMP	GREEN/BROWN
	NOT USED	b	24	NOT USED	
	NOT USED	c	25	NOT USED	
	NOT USED	d	26	NOT USED	
BLACK	GND	e	27	GND	BLACK
BLACK	GND	f	28	GND	BLACK

(BASE COLOR/LINE COLOR)

BOARD DRAWING

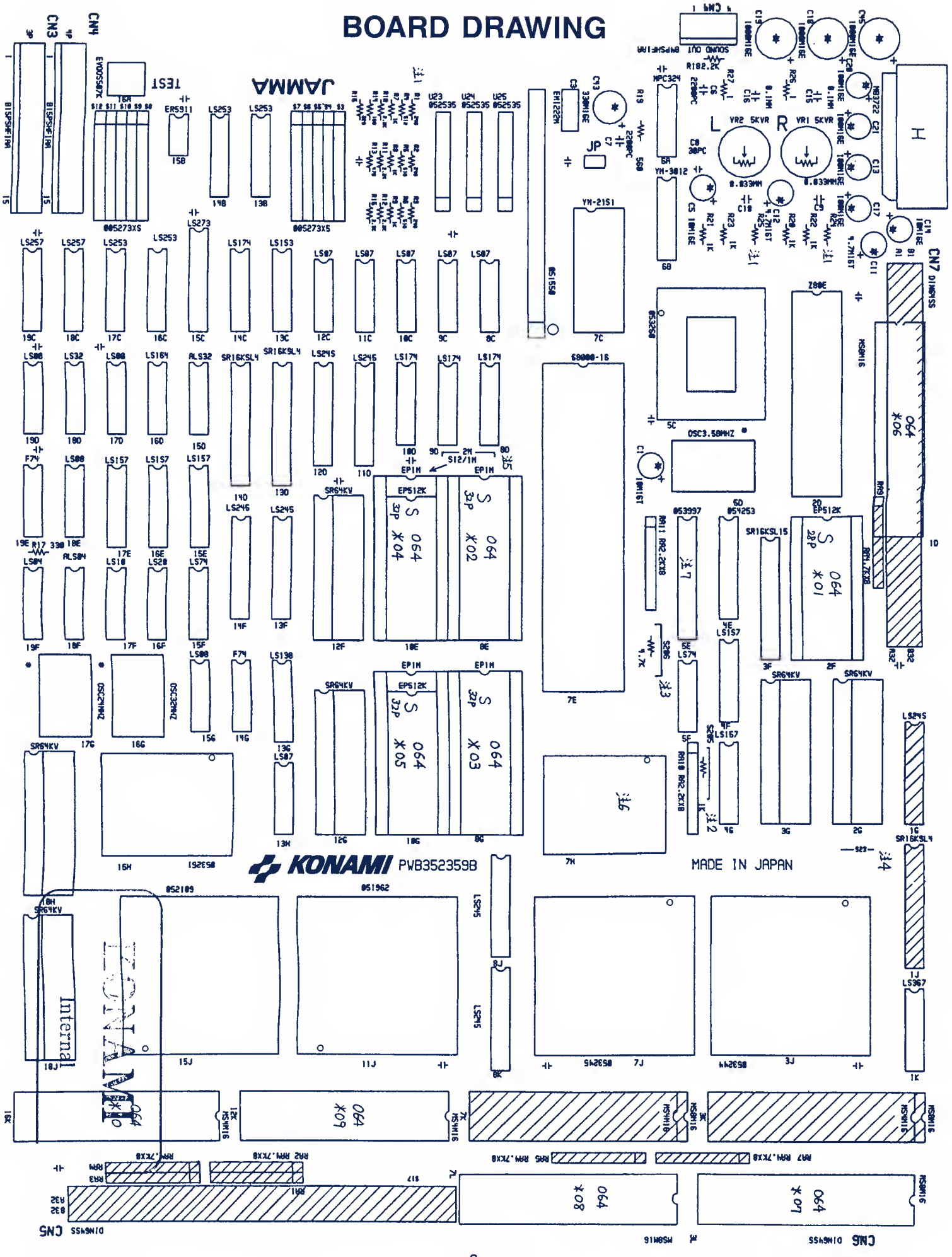

THIS EQUIPMENT COMPLIES WITH THE REQUIREMENTS IN PART 15 OF FCC RULES FOR A CLASS A COMPUTING DEVICE. OPERATION OF THIS EQUIPMENT IN A RESIDENTIAL AREA MAY CAUSE UNACCEPTABLE INTERFERENCE TO RADIO AND TV RECEPTION REQUIRING THE OPERATOR TO TAKE WHATEVER STEPS ARE NECESSARY TO CORRECT THE INTERFERENCE. THIS DEVICE MUST ACCEPT ANY INTERFERENCE RECEIVED, INCLUDING INTERFERENCE THAT MAY CAUSE UNDESIRED OPERATION.



900 Deerfield Parkway, Buffalo Grove, 60089-4510
Telephone: (708) 215-5100, Telex: 6871385 KONAM UW, Fax: (708) 215-5122

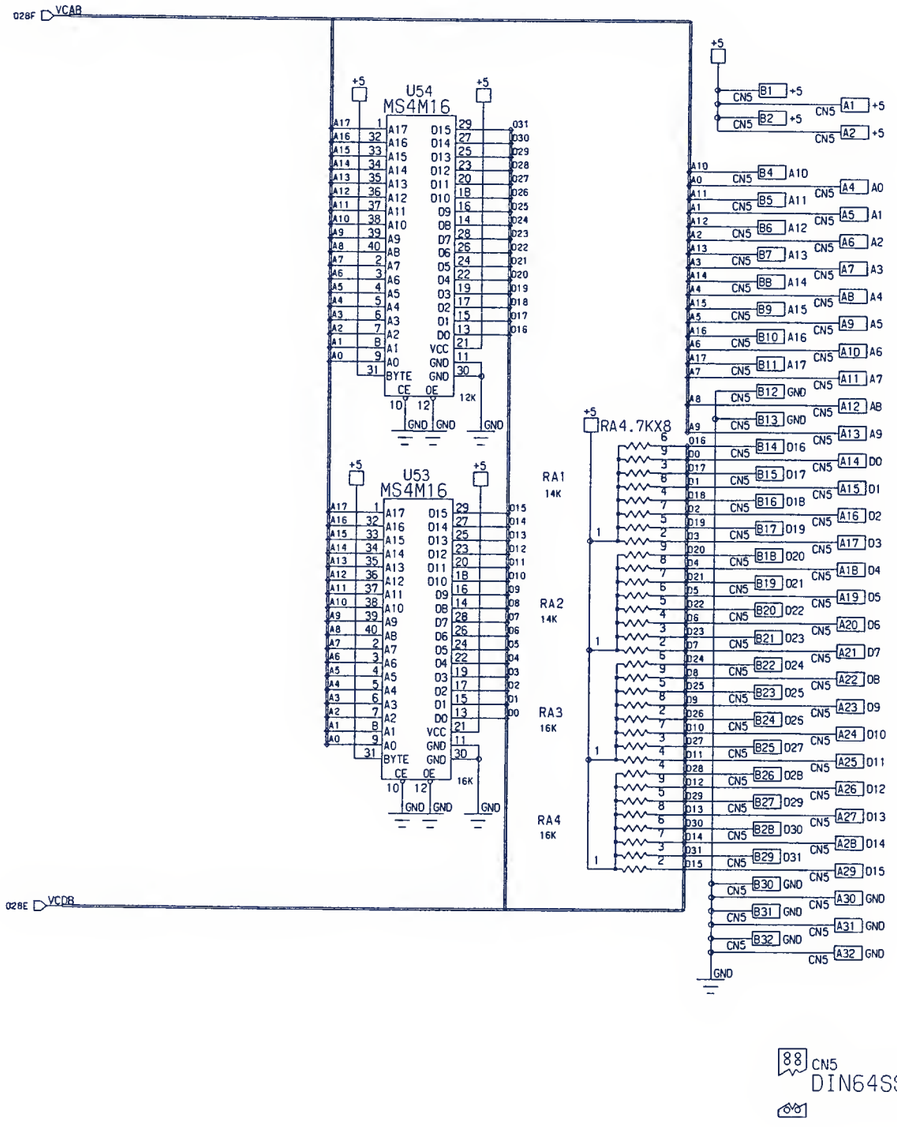

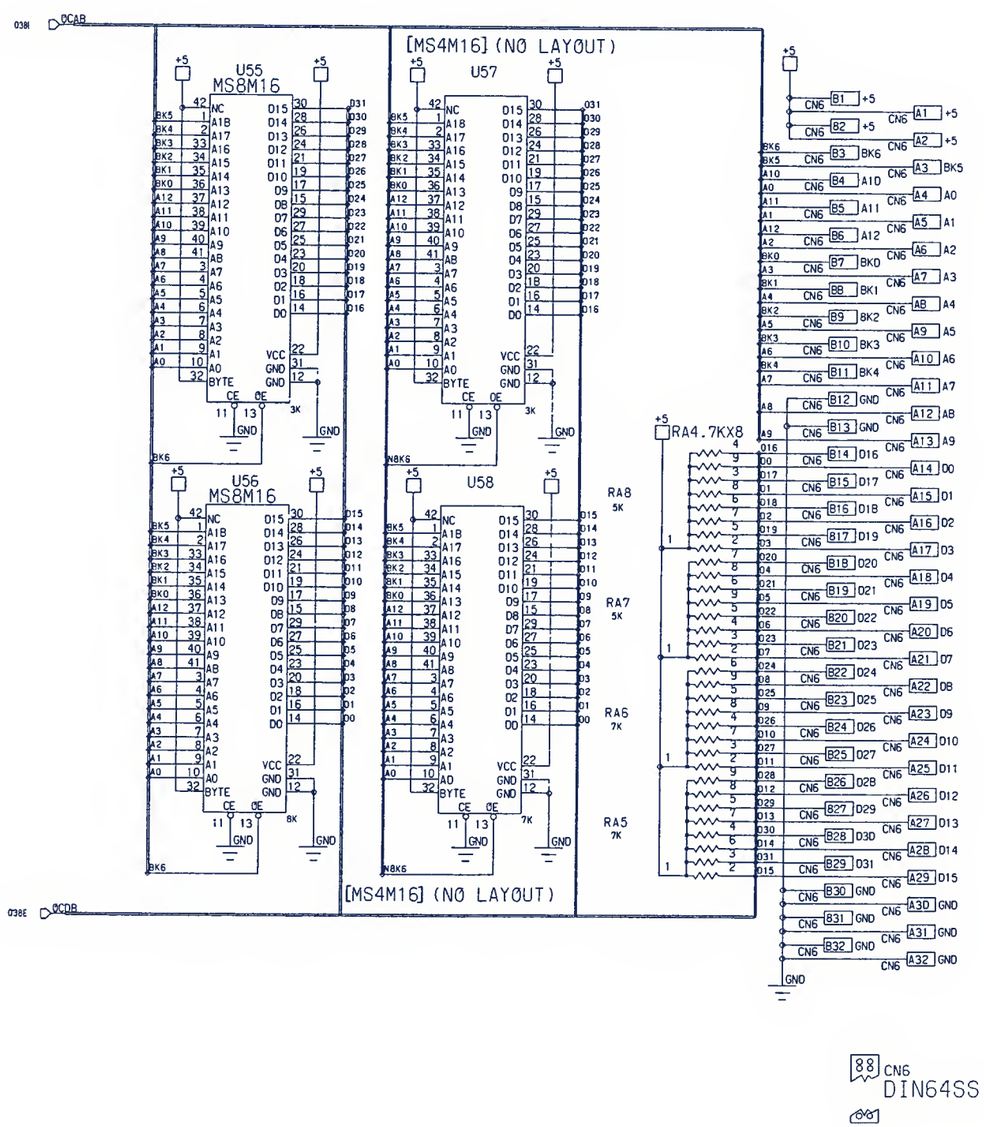

PROPRIETARY AND CONFIDENTIAL:
REPRODUCTION FORBIDDEN WITHOUT THE SPECIFIC WRITTEN PERMISSION OF KONAMI CO..LTD..7-3-2. MINATOJIMA-NAKAMACHI. CHUO-KU. KOBE 650. JAPAN. THIS DRAWING IS ONLY CONDITIONALLY ISSUED. NEITHER RECEIPT NOR POSSESSION OF THIS DRAWING OR ANY OPERATING MANUAL RELATING TO KONAMI'S GAMES OR PRODUCTS CONTAINING THIS DRAWING CONFERS OR TRANSFERS ANY RIGHT IN OR LICENSE TO USE THE PRINTED CIRCUIT BOARDS RELATING TO THIS DRAWING OR OTHER SUBJECT MATTER OF THE DRAWING OR ANY DESIGN OR TECHNICAL INFORMATION SHOWN THEREON. EXCEPT FOR MANUFACTURE BY VENDORS OF KONAMI CO..LTD. AND FOR MANUFACTURE UNDER KONAMI'S WRITTEN LICENSE. NO RIGHT IS GRANTED TO REPRODUCE. MAKE. HAVE MADE. USE OR SELL THIS DRAWING OR THE SUBJECT MATTER THEREOF INCLUDING. WITHOUT LIMITATION. THE PRINTED CIRCUIT BOARD OR OPERATING MANUAL RELATING THERETO. WHATSOEVER. UNLESS BY WRITTEN AGREEMENT WITH OR WRITTEN PERMISSION FROM KONAMI.
COPYRIGHT 1991 KONAMI CO..LTD. ALL RIGHTS RESERVED.

KONAMI CO. LTD.

DRAWING				
	DESIGN	K.FURUKAWA	TITLE	SCHEMATIC
	DRAW	K.FURUKAWA	SUBTITLE	
	CHECK		PAGE	
	APPROVE		CODE NO.	352921
	SCALE		REG.TYPE	GXD63/GX064
	TOLERANCE		SECURITY LEVEL	CONFIDENTIAL
	DATE	1991/06/11		

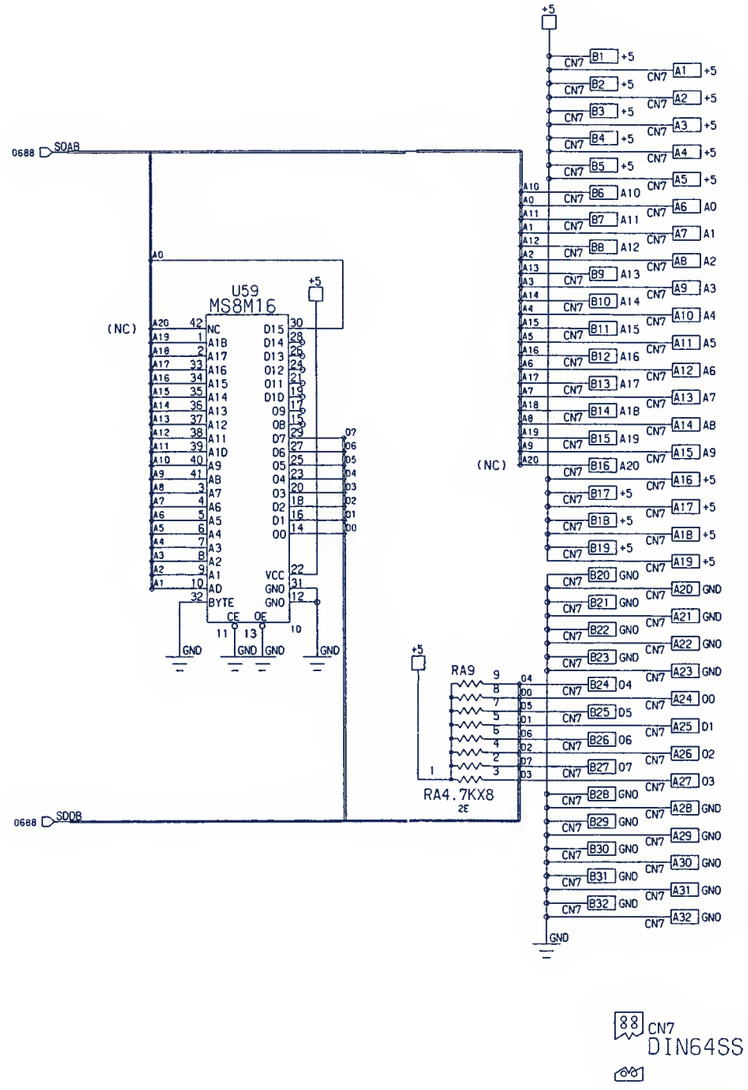

PROPRIETARY AND CONFIDENTIAL:
REPRODUCTION FORBIDDEN WITHOUT THE SPECIFIC WRITTEN PERMISSION OF KONAMI CO.,LTD.,7-3-2. MINATOJIMA-NAKAMACHI. CHUO-KU. KOBE 650. JAPAN. THIS DRAWING IS ONLY CONDITIONALLY ISSUED. NEITHER RECEIPT NOR POSSESSION OF THIS DRAWING OR ANY OPERATING MANUAL RELATING TO KONAMI'S GAMES OR PRODUCTS CONTAINING THIS DRAWING CONFERS OR TRANSFERS ANY RIGHT IN OR LICENSE TO USE THE PRINTED CIRCUIT BOARDS RELATING TO THIS DRAWING OR OTHER SUBJECT MATTER OF THE DRAWING OR ANY DESIGN OR TECHNICAL INFORMATION SHOWN THEREON. EXCEPT FOR MANUFACTURE BY VENDORS OF KONAMI CO.,LTD. AND FOR MANUFACTURE UNDER KONAMI'S WRITTEN LICENSE. NO RIGHT IS GRANTED TO REPRODUCE. MAKE. HAVE MADE. USE OR SELL THIS DRAWING OR THE SUBJECT MATTER THEREOF INCLUDING. WITHOUT LIMITATION. THE PRINTED CIRCUIT BOARD OR OPERATING MANUAL RELATING THERETO. WHATSOEVER. UNLESS BY WRITTEN AGREEMENT WITH OR WRITTEN PERMISSION FROM KONAMI.
COPYRIGHT 1991 KONAMI CO.,LTD. ALL RIGHTS RESERVED.

KONAMI

KONAMI CO.,LTD.

DRAWING			
DESIGN	K.FURUKAWA	TITLE	SCHEMATIC
DRAW	K.FURUKAWA	SUBTITLE	
CHECK		PAGE	
APPROVE		CODE NO.	352921
SCALE		REG.TYPE	GX063/GX064
TOLERANCE		SECURITY LEVEL	CONFIDENTIAL
DATE	1991/06/11		

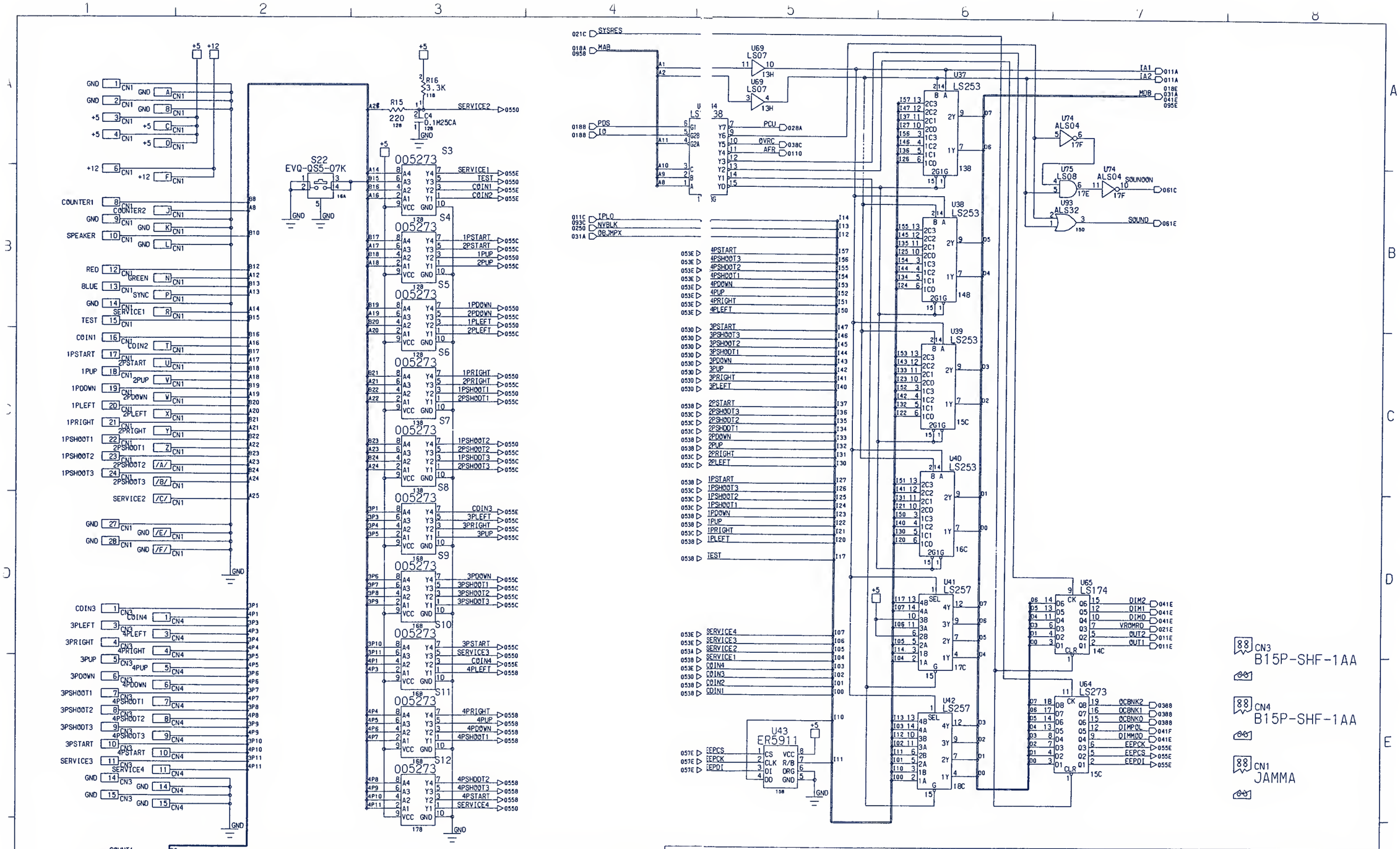

PROPRIETARY AND CONFIDENTIAL:

REPRODUCTION FORBIDDEN WITHOUT THE SPECIFIC WRITTEN PERMISSION OF KONAMI CO.,LTD.,7-3-2. MINATOJIMA-NAKAMACHI, CHUO-KU, KOBE 650, JAPAN. THIS DRAWING IS ONLY CONDITIONALLY ISSUED. NEITHER RECEIPT NOR POSSESSION OF THIS DRAWING OR ANY OPERATING MANUAL RELATING TO KONAMI'S GAMES OR PRODUCTS CONTAINING THIS DRAWING CONFERS OR TRANSFERS ANY RIGHT IN OR LICENSE TO USE THE PRINTED CIRCUIT BOARDS RELATING TO THIS DRAWING OR OTHER SUBJECT MATTER OF THE DRAWING OR ANY DESIGN OR TECHNICAL INFORMATION SHOWN THEREON, EXCEPT FOR MANUFACTURE BY VENDORS OF KONAMI CO.,LTD. AND FOR MANUFACTURE UNDER KONAMI'S WRITTEN LICENSE. NO RIGHT IS GRANTED TO REPRODUCE, MAKE, HAVE MADE, USE OR SELL THIS DRAWING OR THE SUBJECT MATTER THEREOF INCLUDING, WITHOUT LIMITATION, THE PRINTED CIRCUIT BOARD OR OPERATING MANUAL RELATING THERETO, WHATSOEVER, UNLESS BY WRITTEN AGREEMENT WITH OR WRITTEN PERMISSION FROM KONAMI.
COPYRIGHT 1991 KONAMI CO.,LTD. ALL RIGHTS RESERVED.

KONAMI

KONAMI CO.,LTD.

DRAWING				
DESIGN	K.FURUKAWA	TITLE	SCHEMATIC
DRAW	K.FURUKAWA	SUBTITLE	
CHECK	[signature]	PAGE	
APPROVE	[signature]	CODE NO.	352921
SCALE		REG.TYPE	GX063/GX064
TOLERANCE		SECURITY LEVEL	CONFIDENTIAL
DATE	1991/06/11		

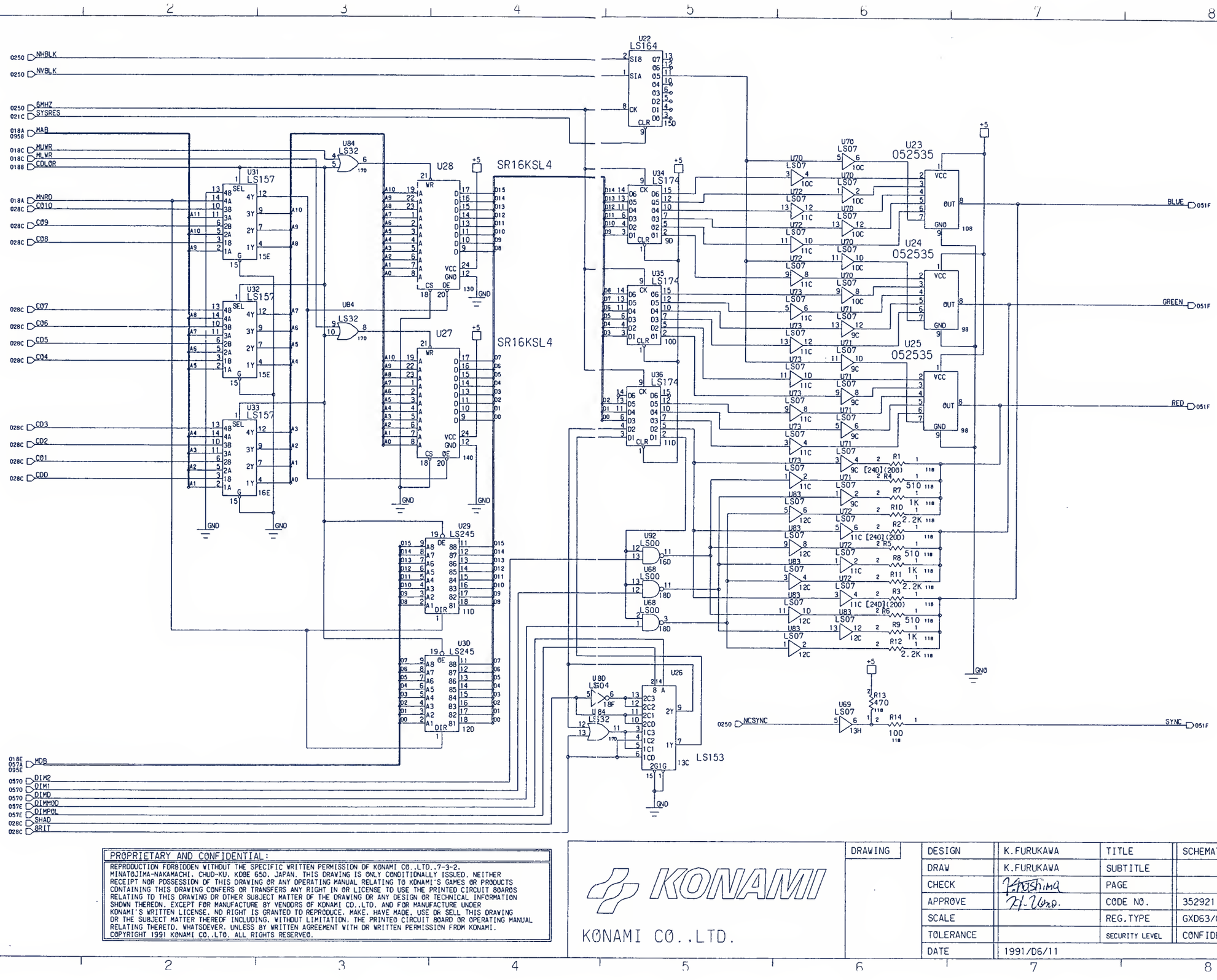

PROPRIETARY AND CONFIDENTIAL:

REPRODUCTION FORBIDDEN WITHOUT THE SPECIFIC WRITTEN PERMISSION OF KONAMI CO.,LTD.,7-3-2. MINATOJIMA-NAKAMACHI. CHUO-KU. KOBE 650. JAPAN. THIS DRAWING IS ONLY CONDITIONALLY ISSUED. NEITHER RECEIPT NOR POSSESSION OF THIS DRAWING OR ANY OPERATING MANUAL RELATING TO KONAMI'S GAMES OR PRODUCTS CONTAINING THIS DRAWING CONFERS OR TRANSFERS ANY RIGHT IN OR LICENSE TO USE THE PRINTED CIRCUIT BOARDS RELATING TO THIS DRAWING OR OTHER SUBJECT MATTER OF THE DRAWING OR ANY DESIGN OR TECHNICAL INFORMATION SHOWN THEREON. EXCEPT FOR MANUFACTURE BY VENDORS OF KONAMI CO.,LTD. AND FOR MANUFACTURE UNDER KONAMI'S WRITTEN LICENSE. NO RIGHT IS GRANTED TO REPRODUCE. MAKE. HAVE MADE. USE OR SELL THIS DRAWING OR THE SUBJECT MATTER THEREOF INCLUDING. WITHOUT LIMITATION. THE PRINTED CIRCUIT BOARD OR OPERATING MANUAL RELATING THERETO. WHATSOEVER. UNLESS BY WRITTEN AGREEMENT WITH OR WRITTEN PERMISSION FROM KONAMI.
COPYRIGHT 1991 KONAMI CO.,LTD. ALL RIGHTS RESERVED.

KONAMI

KONAMI CO.,LTD.

DRAWING			
DESIGN	K.FURUKAWA	TITLE	SCHEMATIC
DRAW	K.FURUKAWA	SUBTITLE	
CHECK	K.Fujishima	PAGE	
APPROVE	K.Ueno	CODE NO.	352921
SCALE		REG.TYPE	GXD63/GXD64
TOLERANCE		SECURITY LEVEL	CONFIDENTIAL
DATE	1991/06/11		

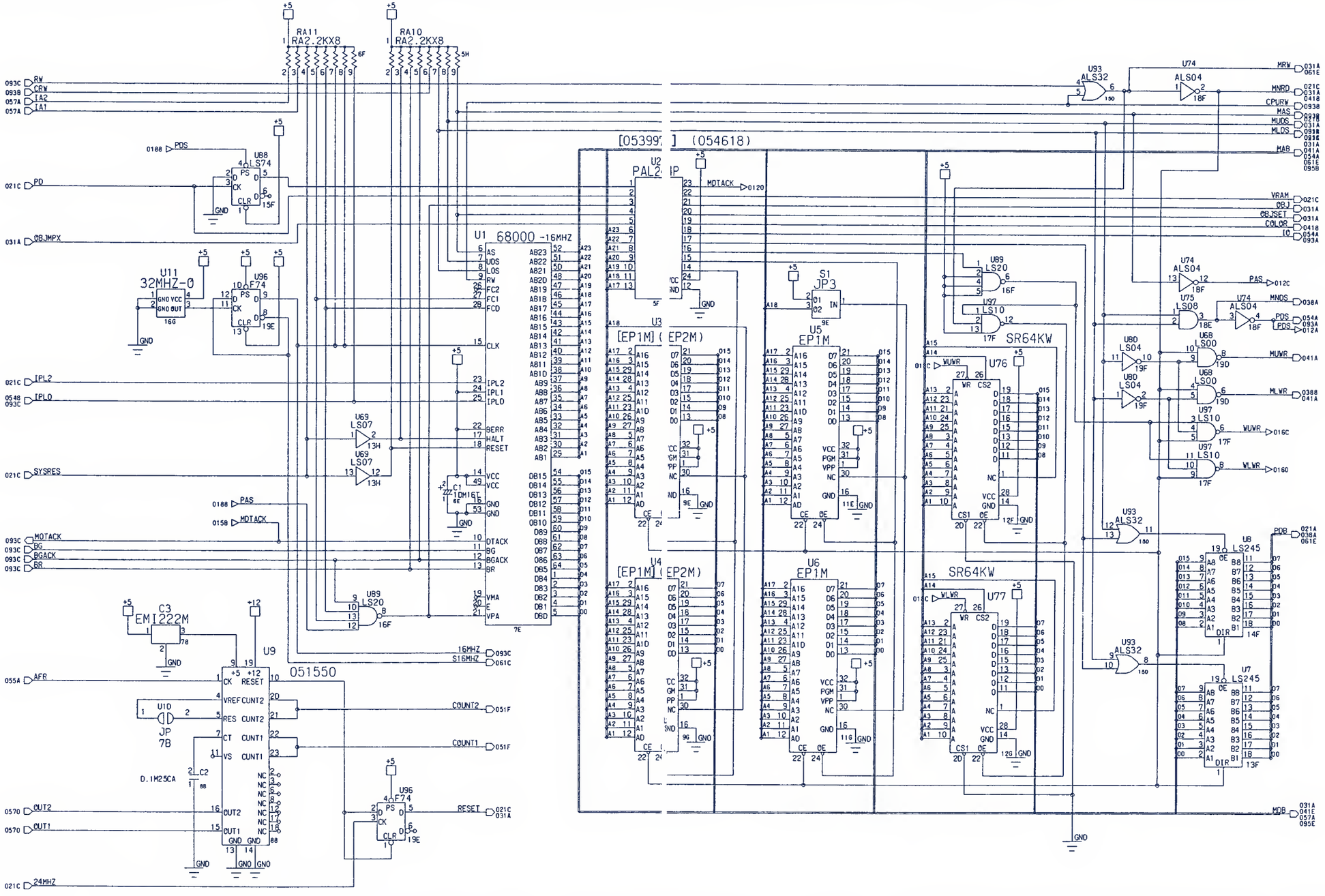

PROPRIETARY AND CONFIDENTIAL:
REPRODUCTION FORBIDDEN WITHOUT THE SPECIFIC WRITTEN PERMISSION OF KONAMI CO..LTD..7-3-2. MINATOJIMA-NAKAMACHI. CHUO-KU. KOBE 650. JAPAN. THIS DRAWING IS ONLY CONDITIONALLY ISSUED. NEITHER RECEIPT NOR POSSESSION OF THIS DRAWING OR ANY OPERATING MANUAL RELATING TO KONAMI'S GAMES OR PRODUCTS CONTAINING THIS DRAWING CONFERS OR TRANSFERS ANY RIGHT IN OR LICENSE TO USE THE PRINTED CIRCUIT BOARDS RELATING TO THIS DRAWING OR OTHER SUBJECT MATTER OF THE DRAWING OR ANY DESIGN OR TECHNICAL INFORMATION SHOWN THEREON. EXCEPT FOR MANUFACTURE BY VENDORS OF KONAMI CO..LTD. AND FOR MANUFACTURE UNDER KONAMI'S WRITTEN LICENSE. NO RIGHT IS GRANTED TO REPRODUCE. MAKE. HAVE MADE. USE OR SELL THIS DRAWING OR THE SUBJECT MATTER THEREOF INCLUDING. WITHOUT LIMITATION. THE PRINTED CIRCUIT BOARD OR OPERATING MANUAL RELATING THERETO. WHATSOEVER. UNLESS BY WRITTEN AGREEMENT WITH OR WRITTEN PERMISSION FROM KONAMI.
COPYRIGHT 1991 KONAMI CO..LTD. ALL RIGHTS RESERVED.

KONAMI
KONAMI CO..LTD.

DRAWING			
DESIGN	K.FURUKAWA	TITLE	SCHEMATIC
DRAW	K.FURUKAWA	SUBTITLE	
CHECK		PAGE	
APPROVE		CODE NO.	352921
SCALE		REG. TYPE	GX063/GX064
TOLERANCE		SECURITY LEVEL	CONFIDENTIAL
DATE	1991/06/11		

WIRING DIAGRAM

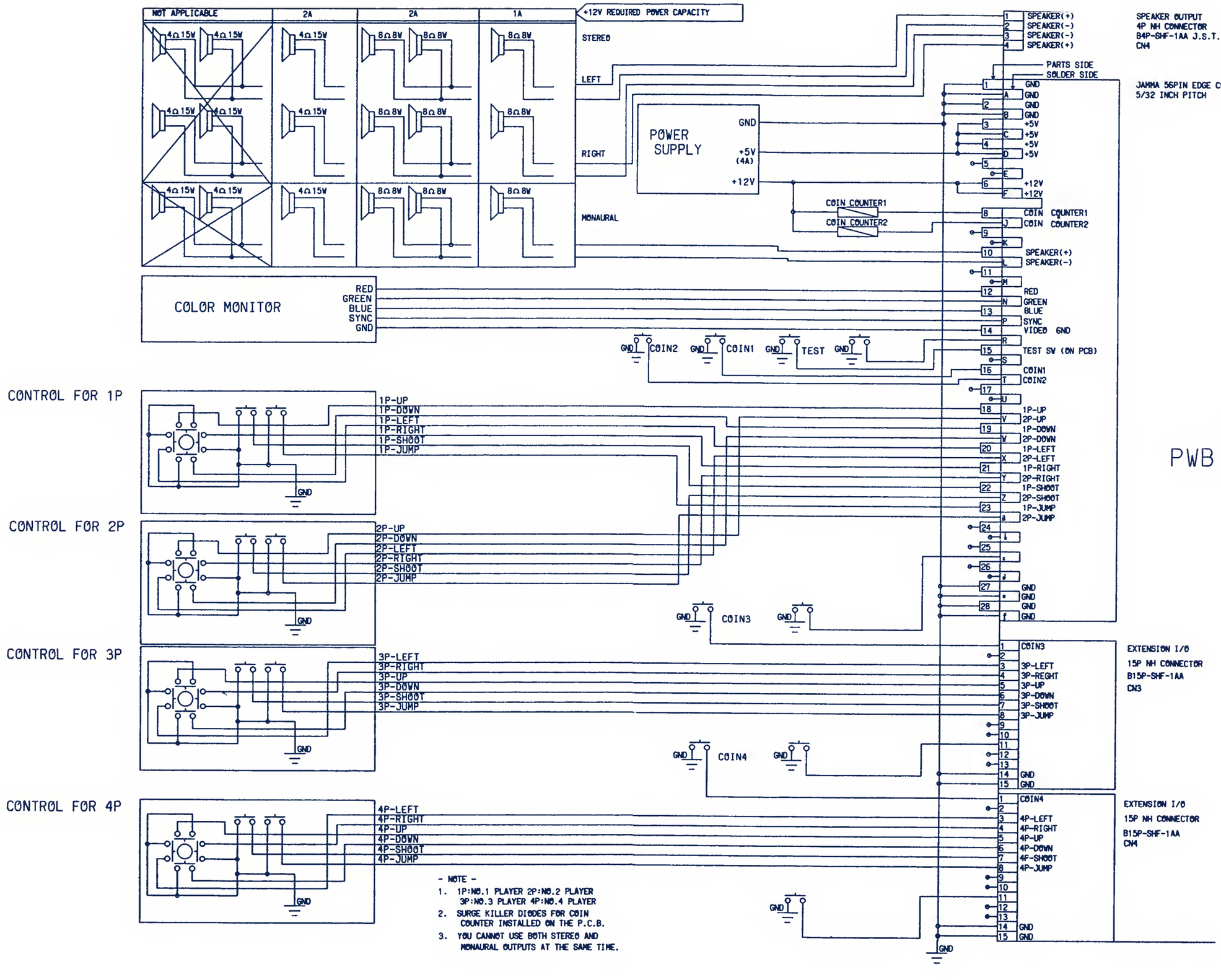

- NOTE -

1. 1P:NO.1 PLAYER 2P:NO.2 PLAYER
   3P:NO.3 PLAYER 4P:NO.4 PLAYER
2. SURGE KILLER DIODES FOR COIN COUNTER INSTALLED ON THE P.C.B.
3. YOU CANNOT USE BOTH STEREO AND MONAURAL OUTPUTS AT THE SAME TIME.

GX064
PWB 352359B