KONAMI®

Dip Switch Settable For Arcade or Street Version

LETHAL ENFORCERS II Gun Fighters™

LETHAL ENFORCERS II GUN FIGHTERS™ is a trademark of KONAMI (America) Inc.
1994 KONAMI (America) Inc. All rights reserved.

© Konami Inc. 1994 Konami® is a trademark of Konami Co., Ltd.

Service & Parts #

708-215-5100

George Limonez Ext. 122 or 123
Catherine Hilario Ext. 123

INSTRUCTION MANUAL

KONAMI® (America) Inc. is a trademark of Konami Industry Co., Ltd.

Part No. 312400

LETHAL ENFORCERS II GUN FIGHTERS has the capability of two different play settings.

ARCADE VERSION

1 or 2 people may play at the same time. The players must use their skill to advance to higher stages.

STREET VERSION

1 or 2 people may play at the same time. The players may choose their level when the stage select screen appears.

*Konami recommends **STREET VERSION** settings for any **ADULT** location. (See page 3 Dip Switch Settings.)

LETHAL ENFORCERS II GUN FIGHTERS PARTS LIST

Part #	Description
191010	Gun Fighters AC Harness
191011	Gun Fighters DC Harness
312003	Gun Fighters PCB
312100	Gun Fighters Control Panel Overlay
312104	Gun Fighters Upper Bezel Decal
312105	Gun Fighters Lower Bezel Decal
312200	Gun Fighters Marquee
312300	Gun Fighters Upper Right Side Decal
312301	Gun Fighters Upper Left Side Decal
312302	Gun Fighters Middle Right Side Decal
312303	Gun Fighters Middle Left Side Decal
312304	Gun Fighters Lower Right Side Decal
312305	Gun Fighters Lower Left Side Decal
312400	Gun Fighters Manual
312800	Gun Fighters Pink Gun
312801	Gun Fighters Blue Gun
312900	Gun Fighters Holster
30284	Red 2″ Start Button
30285	Blue 2″ Start Button
35205	ISO Transformer
35406	Power Supply
40101	Coin Door With Meter
40214	Marquee Bracket
40213	Monitor Glass Bracket
40361	Mirror Glass
40356	Monitor Glass
40357	Marquee Glass
40531	25″ Monitor
40700	Light Fixture
40702	Light Bulb

LETHAL ENFORCERS II GUN FIGHTERS WIRING HARNESS

Solder Side				Parts Side	
BLACK	GND	A	1	GND	BLACK
BLACK	GND	B	2	GND	BLACK
RED	+5V DC	C	3	+5V DC	RED
RED	+5V DC	D	4	+5V DC	RED
	NOT USED	E	5	NOT USED	
ORANGE	+12V DC	F	6	+12V DC	ORANGE
	*KEY	H	7	*KEY	
BROWN/YELLOW	COIN COUNTER	J	8	COIN COUNTER	GREEN/VIOLET
	(EMPTY)	K	9	(EMPTY)	
	(EMPTY)	L	10	(EMPTY)	
	(EMPTY)	M	11	(EMPTY)	
WHITE/GREEN	VIDEO GREEN	N	12	VIDEO RED	RED/WHITE
WHITE	VIDEO SYNC	P	13	VIDEO BLUE	BLUE/WHITE
	(EMPTY)	R	14	VIDEO GROUND	BLACK
	(EMPTY)	S	15	TEST SWITCH	GRAY/WHITE
WHITE/VIOLET	COIN 2	T	16	COIN 1	BLUE/VIOLET
RED/GREEN	START 2	U	17	START 1	RED/YELLOW
	(EMPTY)	V	18	(EMPTY)	
	(EMPTY)	W	19	(EMPTY)	
	(EMPTY)	X	20	(EMPTY)	
	(EMPTY)	Y	21	(EMPTY)	
	(EMPTY)	Z	22	(EMPTY)	
	(EMPTY)	a	23	(EMPTY)	
	(EMPTY)	b	24	(EMPTY)	
	(EMPTY)	c	25	(EMPTY)	
	(EMPTY)	d	26	(EMPTY)	
BLACK	GND	e	27	GND	BLACK
BLACK	GND	f	28	GND	BLACK

(BASE COLOR/LINE COLOR)

TECHNICAL INFORMATION

(1) Required power capacity
GND-Vcc 5V 4A or more
GND-(+ 12V)
*See the Wiring Diagram.
(2) Output
R (red) analog, positive
G (green) analog, positive
B (blue) analog, positive
SYNC. H-V complexed, negative
(3) The monitor should be horizontal and face up installed.
(4) There is no sound volume knob on the PCB. Sound level should be adjusted in the "SOUND OPTIONS" in the Manual Test mode. (See page 6.)
(5) Handle with care.

DIP SWITCH SETTINGS AND CABINETS AVAILABLE

This game is equipped with 2 way 8-bit DIP SWITCH on the main PCB; The following changes will easily be done with these DIP switches.

DIP SWITCHES

	CONTENTS	ON	OFF
sw1	SOUND OUTPUT	MONAURAL	**STEREO**
sw2	COIN MECHANISM	INDEPENDENT	**COMMON**
sw3	STAGE SELECTION	YES	**NO**

***Bold letters show default settings.**

Note:

1) sw4 thru sw8 on Dip switch 1 and Dip switch 2 aren't used.
2) On the STEREO cabinet, set sw1 on Dip switch at "ON" so that you can get better music and sound effects.
2) Regarding other sound options, game options and coin options, refer to "Manual Test" on page 6.

CONTROL PANEL INFORMATION

Use a dual control panel with a gun and a start button for each player.

GUN

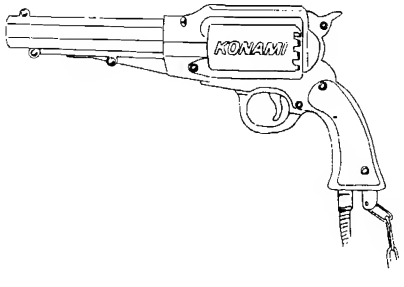

START
BUTTON



PLAY INSTRUCTION

(STARTING NO STAGE SELECTION TYPE GAME)

- 1 or 2 players can play at the same time. Second player can join in at any time.
- Deposit coins and press START button.

(STARTING STAGE SELECTION TYPE GAME)

- 1 or 2 players can play at the same time. Second player can join in at any time.
- Deposit coins and press START button, and the stage select screen will appear. Aim and shoot the screen to select stage. If you are playing with another player, the first selection is accepted.

(HOW TO PLAY)

- Aim and shoot the enemies to kill them.
- Don't shoot innocent people. If you shoot them, you lose one life.
- Reload your gun by shooting off screen at any time.
- Shoot power up weapons for that power.
  - 50 Caliber Sharp: Large caliber bullets. You can shoot 6 bullets without reload.
  - Rifle: 12 round bullets. You can shoot 12 bullets without reload.
  - Double Rig: 2 round burst. You can shoot 12 bullets without reload.
  - Shot Gun: Large gauge. You can shoot 5 bullets without reload.
  - Gatling Gun: Full automatic. You can shoot 24 bullets only.
  - Cannon: Explosive. You can shoot 8 bullets only.
- You lose your life by enemy's shots, or shooting innocent people.
- You can get extra lives with high scores. (The operator can change the settings in the "GAME OPTIONS.")
- When you set the game mode with no stage selection, there are 5 stages and 2 bonus stages. When you defeat the boss enemy in each stage, you can go on to the next stage. • When you set the game mode with stage selection, you can choose the stage out of 5 stages.
- Continuation is available.

SELF TEST

Normal: "OK" will be displayed. Then the game will start.
Abnormal: "BAD" will be displayed and self test will repeat.

MANUAL TEST

(1) HOW TO START

After switching on the power, press the TEST SWITCH on the main PCB or on the cabinet, and you will get the MAIN MENU of the Manual Test.

NOTE: Switching on with TEST SWITCH pressed causes the program in the EEPROM to be initialized to default.

(2) HOW TO RETURN TO THE GAME MODE

Select "GAME MODE" on the MAIN MENU with START button, then pull gun trigger to return to the game mode.

(3) ITEMS AND HOW TO SELECT

Press player 1 START button to move up the menu, and press player 2 START button to move down the menu, selected menu item shows by red color, then pull either player 1 or player 2 gun trigger to initiate testing. Press player 1 START button during or at the end of each test to return to the MAIN MENU.

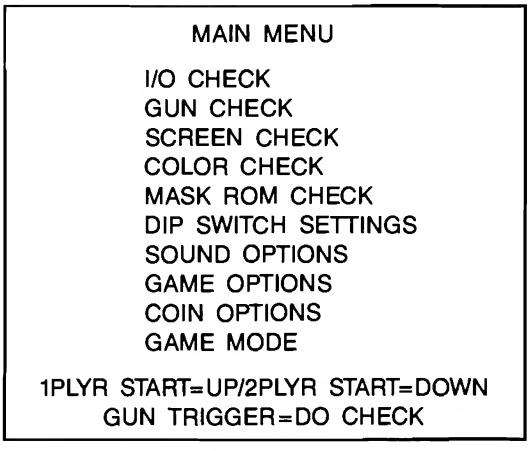

(4) EXPLANATION OF THE ITEMS

1. I/O CHECK

Check both START buttons and Triggers to see "ON" when switched on. Press player 1 and 2 START buttons at the same time to return to MAIN MENU.

2. GUN CHECK

Check gun and monitor's condition. Cross-hatch screen appears, then you can aim and shoot with both guns. You'll see green dot after you're shot at. If you cannot shoot some area, you need to adjust the monitor or gun.

3. SCREEN CHECK

Adjust focus, alignment, size, etc. using the cross-hatch screen.

4. COLOR CHECK

In color bar screen, you can adjust color brightness so that the specified area will be colorless. Improper adjustment causes the problems in game play. When you press player 2 START button, the screen will be filled with red, green, blue, white then back to color bar screen.

5. MASK ROM CHECK

Roms will be checked one after another, and the message "OK" or "BAD" will be displayed on the screen.

6. DIP SWITCH SETTINGS

Screen shows the present settings. To modify settings, turn ON/OFF the DIP switch 1 on the main PCB.

7. SOUND OPTIONS

The following screen will appear. Push player 1 or player 2 START button to select item and pull gun trigger to modify setting. Factory settings are shown in green, and modified results in red. (Settings below are not always the factory settings.) After modification is completed, select "SAVE AND EXIT" and pull player 1 (2) trigger to save and return to MAIN MENU.

SOUND OPTIONS	
SOUND IN ATTRACT MODE=ALL THE TIME	...Select out of "ALL THE TIME," "COMPLETE OFF," "ONCE EVERY 4 CYCLES"
SOUND VOLUME=13	...Sound volume from 0 to 30
SOUND SCALE CHECK	...Music scale sounds
FACTORY SETTINGS	...All the settings return to default
SAVE AND EXIT	...Save the modified settings
EXIT	
1PLYR START=UP/2PLYR START=DOWN GUN TRIGGER=MODIFY SETTING	

*If you select "EXIT" instead of "SAVE AND EXIT" after modifying some settings, the message appears: "YOU DID NOT SAVE. DO YOU WANT TO SAVE? YES/NO." When you choose "YES," the screen shows "NOW SAVING" and returns to MAIN MENU. If you select "NO," "NO MODIFICATION" is shown and then MAIN MENU appears.

(8) GAME OPTIONS

GAME OPTIONS		
DIFFICULTY LEVEL	4 MEDIUM	...Select out of 8 levels
PLAYER'S LIFE	1 PLAY 5 LIVES	...Select from 1 to 9 lives
EXTRA LIFE	1ST AT 2000 POINTS	...Select out of "1st/1000, 2nd/1000," "1st/1000, 2nd/2000" "1st/2000, 2nd/2000," "1st/2000, 2nd/3000," "NO EXTRA LIFE"
EVERY ADDITIONAL	2000 POINTS	
VIDEO SCREEN	FLIP MIRROR	..."MIRROR," "UPSIDE DOWN," "NO MIRROR," "MIRROR FLIP"
VIOLENT MODE	BLOODY	...Select out of "BLOODY" or "CLEAN"
FACTORY SETTINGS		...Same as "SOUND OPTIONS"
SAVE AND EXIT		
EXIT		
1PLYR START=UP/2PLYR START=DOWN GUN TRIGGER=MODIFY SETTING		

(9) COIN OPTIONS

COIN OPTIONS		
FREE PLAY	NO	...“NO,” “YES”
COIN MECHANISM	COMMON	...You can change this with DIP switch 1 on the main PCB (sw2)
COIN SLOT1	1 COIN 1 CREDIT	
COIN SLOT2	1 COIN 1 CREDIT	
PREMIUM START	YES 1	...“NO” or “YES 1” to “YES 4.” (You can set the play fee for starting higher than the play fee for continuation)
2 CREDITS TO START		
1 CREDIT TO CONTINUE		
FACTORY SETTINGS		...Same as “SOUND OPTIONS”
SAVE AND EXIT		
EXIT		
1PLYR START=UP/2PLRY START=DOWN		
GUN TRIGGER=MODIFY SETTING		

*When the “COIN MECHANISM” is set at “COMMON” on the DIP switch 1 on the main PCB (sw2 is “OFF”). On the cabinet with 2 coin slots, coin setting must be done for each coin slot.
When the “COIN MECHANISM” is set at “INDEPENDENT” on the DIP switch 1 on the main PCB (sw2 is “ON”), the left coin slot will be for player 1, the right one for player 2.
When you want “PREMIUM START” setting, choose the number of extra coins necessary for starting, then decide the coin setting for continuation. The number of coins for starting will be the sum of both numbers. If you do not set premium start, the number of coins necessary for start and continuation will be the same.

*COIN SETTING OPTIONS

COIN(S)	1	1	1	1	1	1	1	2	2	2	3	3	3	4	4	4
CREDIT(S)	1	2	3	4	5	6	7	1	3	5	1	2	4	1	3	5

TROUBLESHOOTING ABOUT GUN AND MONITOR

Here is a list of commonly found problems and their possible solutions.

- Erratic gun shot placement.
  - —Check to see that there is no reflected light from fluorescent or neon lights bouncing off of the screen. Strong sunlight also affects the shot placement.
- You cannot shoot a certain area in the screen.
  - —Check to see the monitor’s purity with red, blue, green, and white screen in the “COLOR CHECK” in the Manual Test. If you find purity problems, you should degauss the monitor.
  - —Check to see there is no magnetic equipment around the cabinet. This may also cause the monitor to become magnetized.
  - —After degaussing the monitor, you can check the gun and monitor in the “GUN CHECK” in the Manual Test.
- Screen flashes when trigger is pulled but no shot is made.
  - —Check to see the gun lens inside of the barrel is clean.
  - —Adjust the monitor’s brightness with color bar screen in the “COLOR CHECK” of the Manual Test.
- **CLEAN MONITOR AND MIRROR REGULARLY.**

LETHAL ENFORCERS II GUN FIGHTERS A.C. WIRING HARNESS

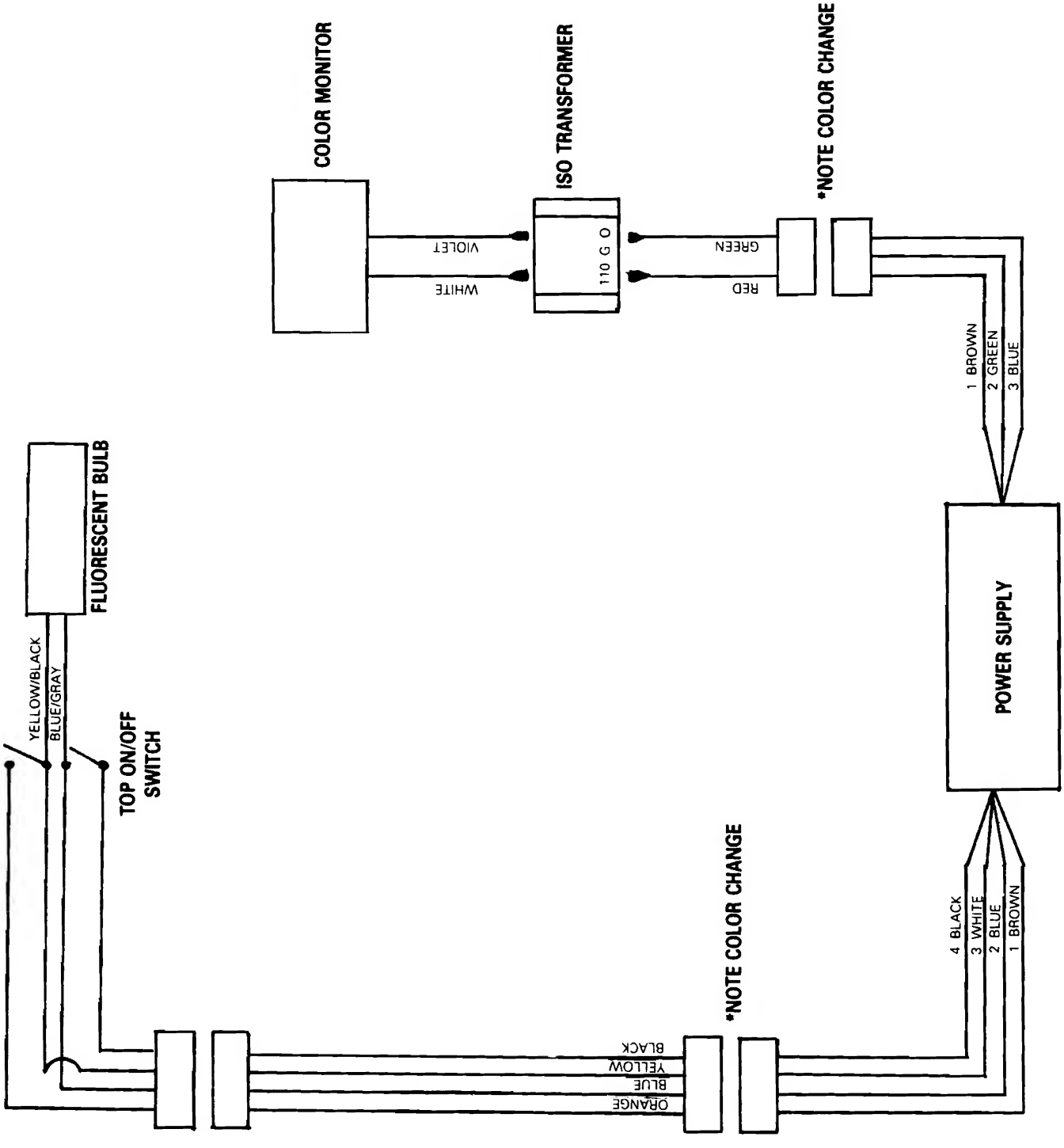

THIS EQUIPMENT COMPLIES WITH THE REQUIREMENTS IN PART 15 OF FCC RULES FOR A CLASS A COMPUTING DEVICE. OPERATION OF THIS EQUIPMENT IN A RESIDENTIAL AREA MAY CAUSE UNACCEPTABLE INTERFERENCE TO RADIO AND TV RECEPTION REQUIRING THE OPERATOR TO TAKE WHATEVER STEPS ARE NECESSARY TO CORRECT THE INTERFERENCE. THIS DEVICE MUST ACCEPT ANY INTERFERENCE RECEIVED, INCLUDING INTERFERENCE THAT MAY CAUSE UNDESIRED OPERATION.

KONAMI®

900 Deerfield Parkway, Buffalo Grove, 60089-4510
Telephone: (708) 215-5100, Telex: 6871385 KONAM UW, Fax: (708) 215-9684

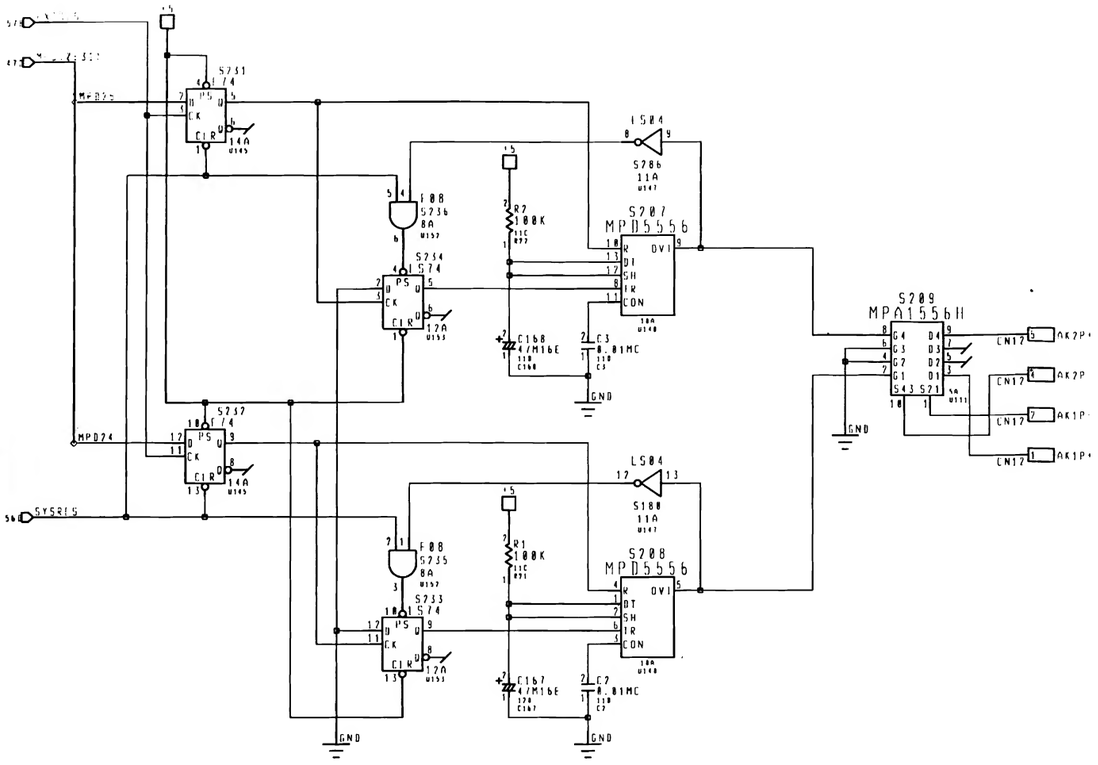

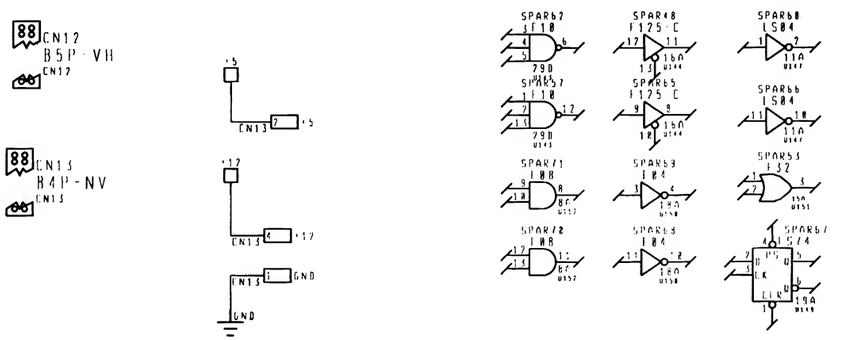

NOTE

+5 : +5V

+12 : +12V

KIND OF CAPACITOR

944 4.7/M16E : 4.7uF 16V ELEC.

943 330M16E : 330uF 16V ELEC.

945 0.01MC : 0.01uF CERAMIC

946 0.022M16C : 0.022uF CERAMIC (AXIAL LEAD TYPE)

: NOT LAYOUT

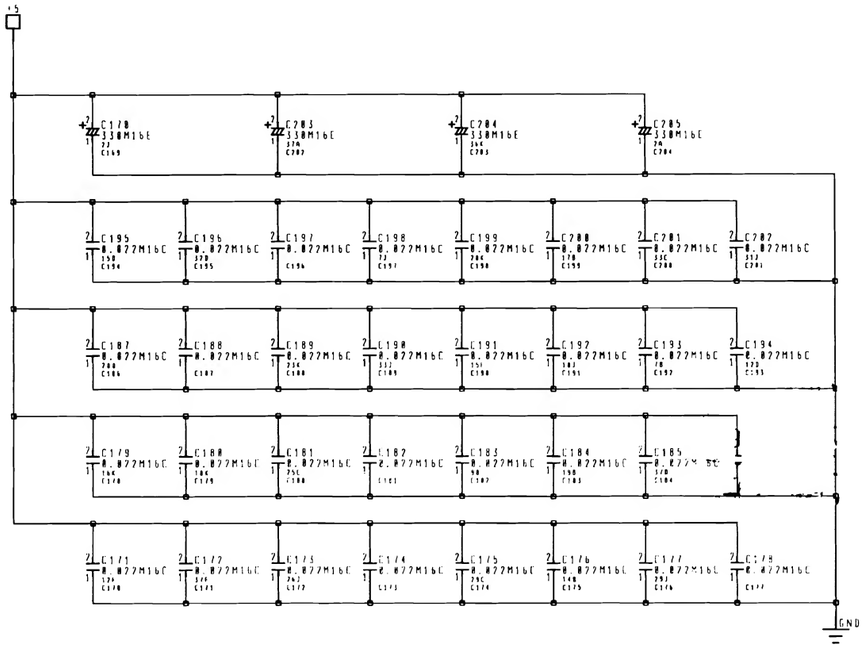

PROPRIETARY AND CONFIDENTIAL:
REPRODUCTION IS FORBIDDEN WITHOUT THE SPECIFIC WRITTEN PERMISSION OF KONAMI CO.,LTD., 4 3 1, IDORANOMON, MINATOKU, TOKYO 105, JAPAN. THIS DRAWING IS ONLY CONDITIONALLY ISSUED. NEITHER RECEIPT NOR POSSESSION OF THIS DRAWING OR ANY OPERATING MANUAL RELATING TO KONAMI'S GAMES OR PRODUCTS CONTAINING THIS DRAWING CONFERS OR TRANSFERS ANY RIGHT IN OR LICENSE TO USE THE PRINTED CIRCUIT BOARDS RELATING TO THIS DRAWING OR OTHER SUBJECT MATTER OF THE DRAWING OR ANY DESIGN OR TECHNICAL INFORMATION SHOWN THEREON, EXCEPT FOR MANUFACTURE BY VENDORS OF KONAMI CO.,LTD. AND FOR MANUFACTURE UNDER KONAMI'S WRITTEN LICENSE. NO RIGHT IS GRANTED TO REPRODUCE, MAKE, HAVE MADE, USE OR SELL THIS DRAWING OR THE SUBJECT MATTER THEREOF INCLUDING, WITHOUT LIMITATION, THE PRINTED CIRCUIT BOARD OR OPERATING MANUAL RELATING THERETO, WHATSOEVER, UNLESS BY WRITTEN AGREEMENT WITH OR WRITTEN PERMISSION FROM KONAMI.
COPYRIGHT 1997 KONAMI CO.,LTD. ALL RIGHTS RESERVED.

KONAMI

KONAMI CO.,LTD.

DRAWING			
DESIGN	T.Murayama	TITLE	SCHEMATIC DIAGRAM
DRAW	T.Murayama	SUBTITLE	SOLENOID
CHECK			
APPROVE		CODE NO.	554624
SCALE		REG.TYPE	SUB PCB TYPE 2
TOLERANCE		SECURITY LEVEL	CONFIDENTIAL
DATE	1994. 3. 3		

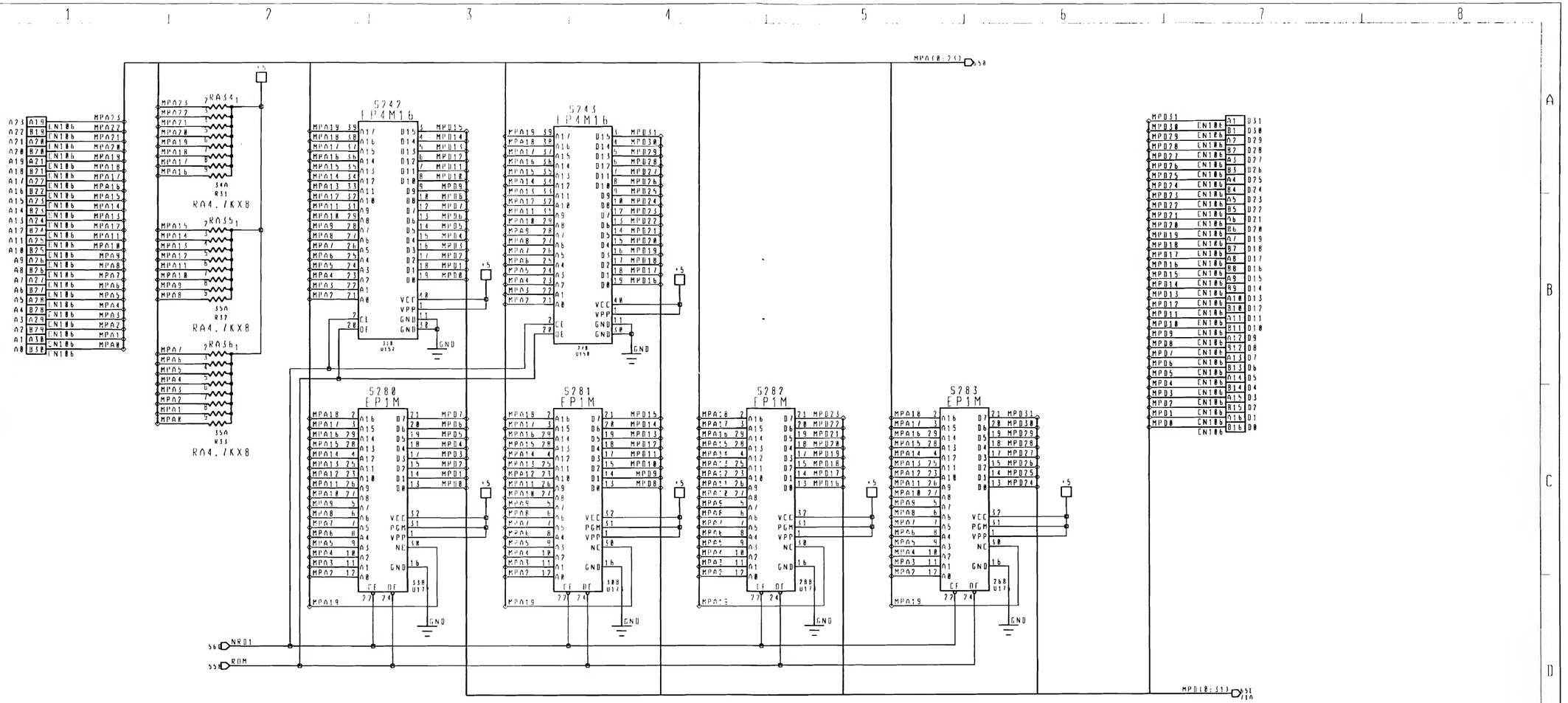

PROPRIETARY AND CONFIDENTIAL:
REPRODUCTION FORBIDDEN WITHOUT THE SPECIFIC WRITTEN PERMISSION OF KONAMI CO.,LTD., 4 3 1, TURANOMON, MINATOKU, TOKYO 105, JAPAN. THIS DRAWING IS ONLY CONDITIONALLY ISSUED. NEITHER RECEIPT NOR POSSESSION OF THIS DRAWING OR ANY OPERATING MANUAL RELATING TO KONAMI'S GAMES OR PRODUCTS CONTAINING THIS DRAWING CONFERS OR TRANSFERS ANY RIGHT IN OR LICENSE TO USE THE PRINTED CIRCUIT BOARDS RELATING TO THIS DRAWING OR OTHER SUBJECT MATTER OF THE DRAWING OR ANY DESIGN OR TECHNICAL INFORMATION SHOWN THEREON. EXCEPT FOR MANUFACTURE BY VENDORS OF KONAMI CO.,LTD. AND FOR MANUFACTURE UNDER KONAMI'S WRITTEN LICENSE, NO RIGHT IS GRANTED TO REPRODUCE, MAKE, HAVE MADE, USE OR SELL THIS DRAWING OR THE SUBJECT MATTER THEREOF INCLUDING, WITHOUT LIMITATION, THE PRINTED CIRCUIT BOARD OR OPERATING MANUAL RELATING THERETO, WHATSOEVER, UNLESS BY WRITTEN AGREEMENT WITH OR WRITTEN PERMISSION FROM KONAMI.
COPYRIGHT 1992 KONAMI CO.,LTD. ALL RIGHTS RESERVED.

CN106
XHSB-0141A
CN186

KONAMI CO.,LTD.

DRAWING	DESIGN	T.Murayama	TITLE	SCHEMATIC DIAGRAM
	DRAW	T.Murayama	SUBTITLE	PROGRAM
	CHECK			
	APPROVE		CODE NO.	554624
	SCALE		REG.TYPE	SUB PCB TYPE 2
	TOLERANCE		SECURITY LEVEL	CONFIDENTIAL
	DATE	1994. 5. 3		

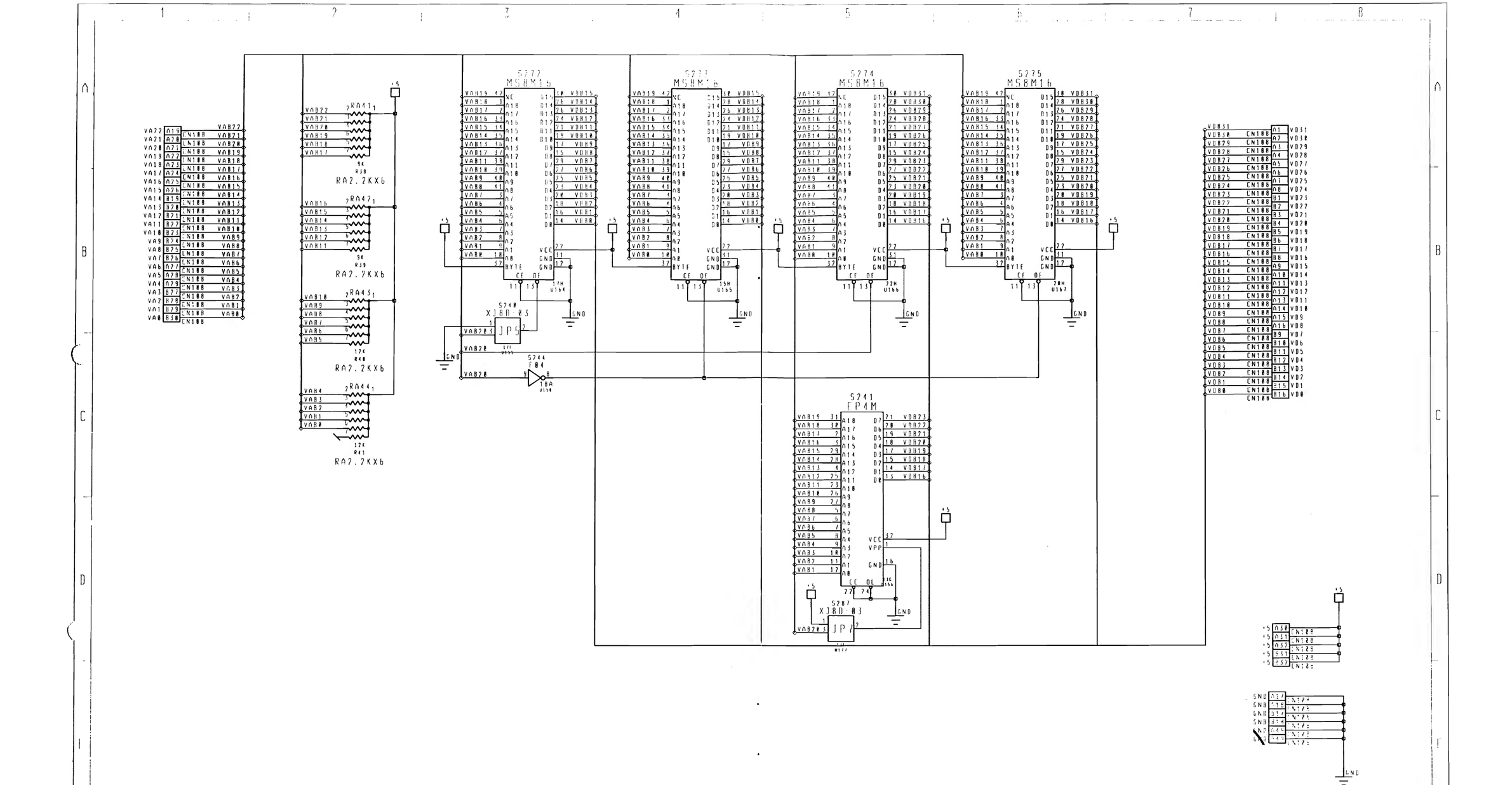

PROPRIETARY AND CONFIDENTIAL:
REPRODUCTION FORBIDDEN WITHOUT THE SPECIFIC WRITTEN PERMISSION OF KONAMI CO.,LTD.,4 3 1, TORANOMON, MINATOKU, TOKYO 105, JAPAN. THIS DRAWING IS ONLY CONDITIONALLY ISSUED. NEITHER RECEIPT NOR POSSESSION OF THIS DRAWING OR ANY OPERATING MANUAL RELATING TO KONAMI'S GAMES OR PRODUCTS CONTAINING THIS DRAWING CONFERS OR TRANSFERS ANY RIGHT IN OR LICENSE TO USE THE PRINTED CIRCUIT BOARDS RELATING TO THIS DRAWING OR OTHER SUBJECT MATTER OF THE DRAWING OR ANY DESIGN OR TECHNICAL INFORMATION SHOWN THEREON. EXCEPT FOR MANUFACTURE BY VENDORS OF KONAMI CO.,LTD. AND FOR MANUFACTURE UNDER KONAMI'S WRITTEN LICENSE, NO RIGHT IS GRANTED TO REPRODUCE, MAKE, HAVE MADE, USE OR SELL THIS DRAWING OR THE SUBJECT MATTER THEREOF INCLUDING, WITHOUT LIMITATION, THE PRINTED CIRCUIT BOARD OR OPERATING MANUAL RELATING THERETO, WHATSOEVER,UNLESS BY WRITTEN AGREEMENT WITH OR WRITTEN PERMISSION FROM KONAMI.
COPYRIGHT 1992 KONAMI CO.,LTD. ALL RIGHTS RESERVED.

CN188
XJ3B-0141A
CN188

KONAMI CO.,LTD.

DRAWING	DESIGN	T.Murayama	TITLE	SCHEMATIC DIAGRAM
	DRAW	T.Murayama	SUBTITLE	VRAM
	CHECK		PAGE	
	APPROVE		CODE NO.	354674
	SCALE		REG.TYPE	SUB PCB TYPE 2
	TOLERANCE		SECURITY LEVEL	CONFIDENTIAL
	DATE	1994. 3. 3		

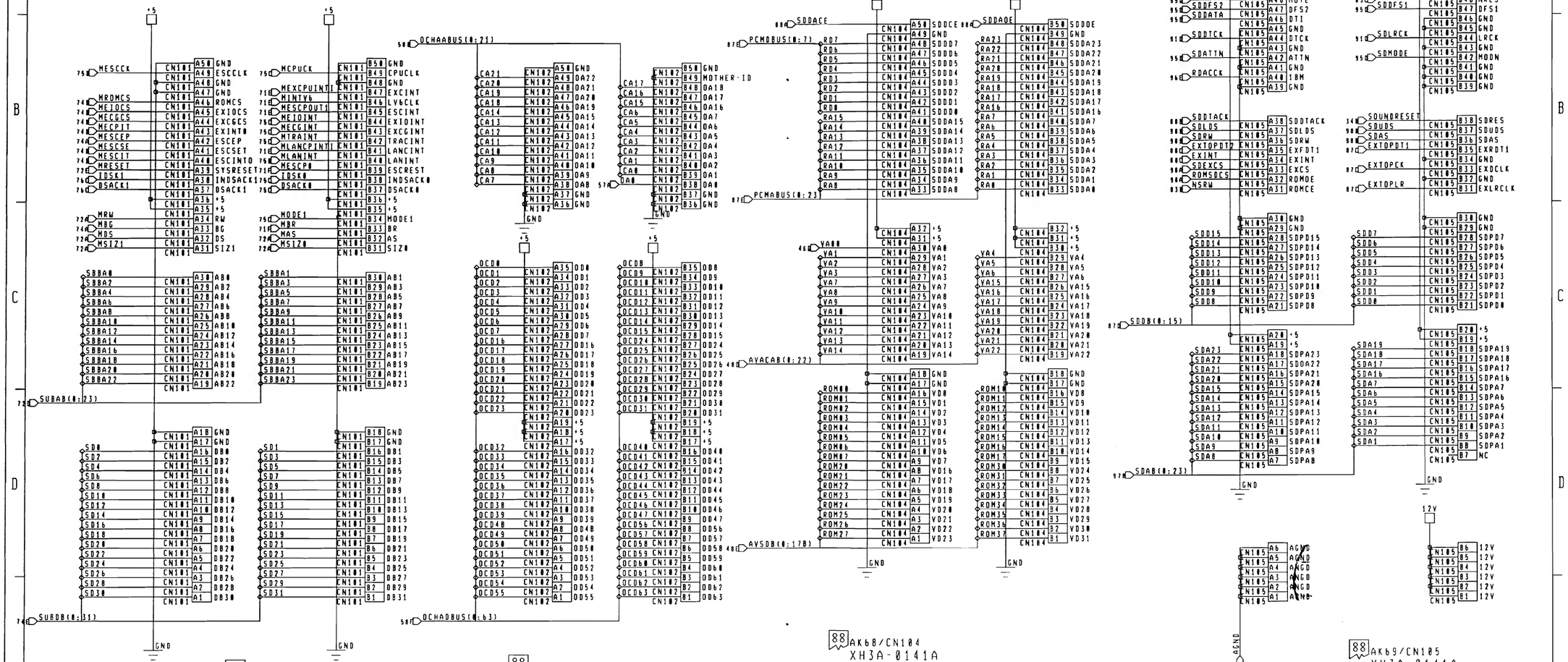

PROPRIETARY AND CONFIDENTIAL:

REPRODUCTION FORBIDDEN WITHOUT THE SPECIFIC WRITTEN PERMISSION OF KONAMI CO.,LTD., 4-3-1, TORANOMON, MINATOKU, TOKYO 105, JAPAN. THIS DRAWING IS ONLY CONDITIONALLY ISSUED. NEITHER RECEIPT NOR POSSESSION OF THIS DRAWING OR ANY OPERATING MANUAL RELATING TO KONAMI'S GAMES OR PRODUCTS CONTAINING THIS DRAWING CONFERS OR TRANSFERS ANY RIGHT IN OR LICENSE TO USE THE PRINTED CIRCUIT BOARDS RELATING TO THIS DRAWING OR OTHER SUBJECT MATTER OF THE DRAWING OR ANY DESIGN OR TECHNICAL INFORMATION SHOWN THEREON. EXCEPT FOR MANUFACTURE BY VENDORS OF KONAMI CO.,LTD. AND FOR MANUFACTURE UNDER KONAMI'S WRITTEN LICENSE, NO RIGHT IS GRANTED TO REPRODUCE, MAKE, HAVE MADE, USE OR SELL THIS DRAWING OR THE SUBJECT MATTER THEREOF INCLUDING, WITHOUT LIMITATION, THE PRINTED CIRCUIT BOARD OR OPERATING MANUAL RELATING THERETO, WHATSOEVER, UNLESS BY WRITTEN AGREEMENT WITH OR WRITTEN PERMISSION FROM KONAMI
COPYRIGHT 1992 KONAMI CO.,LTD. ALL RIGHTS RESERVED.

KONAMI

KONAMI CO.,LTD.

DRAWING	DESIGN	Y. MATSUI	TITLE: SCHEMATIC DIAGRAM
	DRAW	Y. MATSUI	SUBTITLE: CONNECTOR
	CHECK		PAGE:
	APPROVE		CODE NO.: 354471C
	SCALE		REG.TYPE: GX300 PWB3541928
	TOLERANCE		SECURITY LEVEL: CONFIDENTIAL
	DATE	94.3.30	

AJ9/CN1
JAMMA
CN1
JAMMA

GND	1	CN1	GND1	GND	A	CN1	GND1
GND	2	CN1	GND1	GND	B	CN1	GND1
+5	3	CN1	+5	+5	C	CN1	+5
+5	4	CN1	+5	+5	D	CN1	+5
		CN1				CN1	
+12V	6	CN1	+12V	+12V	F	CN1	+12V
		CN1				CN1	
COUNTER1	8	CN1	JCOUNTER1	COUNTER2	J	CN1	JCOUNTER2
GND	9	CN1	GND2	GND	K	CN1	GND2
SPEAKER+	10	CN1	JSPLEFT+	SPEAKER-	L	CN1	JSPLEFT-
		CN1				CN1	
RED	12	CN1	JRED	GREEN	N	CN1	JGREEN
BLUE	13	CN1	JBLUE	SYNC	P	CN1	JNCSYNC
VIDEO GND	14	CN1	VGND	SERVICESW	R	CN1	J1PSER
TEST	15	CN1	TEST				
COINSW1	16	CN1	JCOIN1	COINSW2	T	CN1	JCOIN2
1PSTAERT	17	CN1	J1PSTART	2PSTAERT	U	CN1	J2PSTART
1PUP	18	CN1	J1PUP	2PUP	V	CN1	J2PUP
1PDOWN	19	CN1	J1PDOWN	2PDOWN	W	CN1	J2PDOWN
1PLEFT	20	CN1	J1PLEFT	2PLEFT	X	CN1	J2PLEFT
1PRIGHT	21	CN1	J1PRIGHT	2PRIHT	Y	CN1	J2PRIGHT
1PSHOOT1	22	CN1	J1PSHOOT1	2PSHOOT1	Z	CN1	J2PSHOOT1
1PSHOOT2	23	CN1	J1PSHOOT2	2PSHOOT2	/A/	CN1	J2PSHOOT2
1PSHOOT3	24	CN1	J1PSHOOT3	2PSHOOT3	/B/	CN1	J2PSHOOT3
1PSHOOT4	25	CN1	J1PSHOOT4	2PSHOOT4	/C/	CN1	J2PSHOOT4
1PSHOOT5	26	CN1	J1PSHOOT5	2PSHOOT5	/D/	CN1	J2PSHOOT5
GND	27	CN1	GND3	GND	/E/	CN1	GND3
GND	28	CN1	GND3	GND	/F/	CN1	GND3
		CN1				CN1	

COINSW3	1	CN3	JCOIN1	COINSW4	1	CN4	J4PCOIN
		CN3				CN4	
3PLEFT	3	CN3	J3PLEFT	4PLEFT	3	CN4	J4PLEFT
3PRIGHT	4	CN3	J3PRIGHT	4PRIGHT	4	CN4	J4PRIGHT
3PUP	5	CN3	J3PUP	4PUP	5	CN4	J4PUP
3PDOWN	6	CN3	J3PDOWN	4PDOWN	6	CN4	J4PDOWN
3PSHOOT1	7	CN3	J3PSHOOT1	4PSHOOT1	7	CN4	J4PSHOOT1
3PSHOOT2	8	CN3	J3PSHOOT2	4PSHOOT2	8	CN4	J4PSHOOT2
3PSHOOT3	9	CN3	J3PSHOOT3	4PSHOOT3	9	CN4	J4PSHOOT3
3PSTERT	10	CN3	J3PSTART	4PSTERT	10	CN4	J4PSTART
SERVICESW3	11	CN3	J3PSER	SERVICESW4	11	CN4	J4PSER
		CN3				CN4	
GND	14	CN3	GND4	GND	14	CN4	GND4
GND	15	CN3		GND	15	CN4	

AJ10/CN3
B15P-SHF-1AA
CN3
3P

AJ11/CN4
B15P-SHF-1AA
CN4
4P

AJ80/S436 ZBF253D-00 — +5 — +51 — 14A U336
AJ79/S435 ZBF253D-00 — +51 — 14A U336
AJ82/S438 ZBF253D-00 — +5 — +51 — 14A U336
AJ81/S437 ZBF253D-00 — +51 — 14A U337
AJ84/S440 ZBF253D-00 — +12V — +12 — 14A U338
AJ83/S439 ZBF253D-00 — +12 — 14A U339
AK29/S456 ZBF253D-00 — JSPLEFT+ — SPLEFT+ — 70 — 18D U365
AK28/S455 ZBF253D-00 — JSPLEFT- — SPLEFT- — 70 — 18D U364
AJ75/S431 ZBF253D-00 — GND1 — 12A U331
AJ76/S432 ZBF253D-00 — GND1 — 13A U332
AJ48/S411 ZBF253D-00 — J4PCOIN — COIN4 — 60 — 33C U311
AJ78/S426 ZBF253D-00 — GND1 — 13A U326
AJ32/S459 ZBF253D-00 — JCOUNTER1 — COUNTER1 — 30 — 14A U358
AJ31/S458 ZBF253D-00 — JCOUNTER2 — COUNTER2 — 30 — 14A U357
AK30/S457 ZBF253D-00 — JNCSYNC — NCSYNC — 5C — 18D U356
AJ48/S410 ZBF253D-00 — J4PLEFT — 4PLEFT — 50 — 33C U310
AJ71/S427 ZBF253D-00 — GND1 — 13A U327
AJ23/S388 ZBF253D-00 — JCOIN1 — COIN1 — 60 — 28A U288
AJ25/S390 ZBF253D-00 — JCOIN2 — COIN2 — 60 — 28B U290
AJ47/S409 ZBF253D-00 — JCOIN3 — COIN3 — 60 — 33C U309
AJ58/S412 ZBF253D-00 — J4PRIGHT — 4PRIGHT — 50 — 33C U312
AJ66/S422 ZBF253D-00 — GND2 — 17A U322
AJ12/S378 ZBF253D-00 — J1PSTART — 1PSTART — 50 — 23A U278
AJ24/S389 ZBF253D-00 — J2PSTART — 2PSTART — 5C — 23B U289
AJ36/S408 ZBF253D-00 — J3PLEFT — 3PLEFT — 5C — 33C U308
AJ51/S413 ZBF253D-00 — J4PUP — 4PUP — 50 — 33C U313
AJ72/S428 ZBF253D-00 — GND2 — 17A U328
AJ13/S379 ZBF253D-00 — J1PUP — 1PUP — 5E — 23A U279
AJ26/S391 ZBF253D-00 — J2PUP — 2PUP — 50 — 23B U291
AJ37/S401 ZBF253D-00 — J3PRIGHT — 3PRIGHT — 5C — 33C U301
AJ52/S414 ZBF253D-00 — J4PDOWN — 4PDOWN — 50 — 33C U314
AJ65/S421 ZBF253D-00 — GND3 — 26A U321
AJ14/S380 ZBF253D-00 — J1PDOWN — 1PDOWN — 5E — 27A U280
AJ27/S392 ZBF253D-00 — J2PDOWN — 2PDOWN — 50 — 27B U292
AJ38/S402 ZBF253D-00 — J3PUP — 3PUP — 5C — 33C U302
AJ53/S415 ZBF253D-00 — J4PSHOOT11 — 4PS1 — 5A — 33C U315
AJ67/S423 ZBF253D-00 — GND3 — 26A U323
AJ15/S381 ZBF253D-00 — J1PLEFT — 1PLEFT — 5E — 22A U281
AJ28/S393 ZBF253D-00 — J2PLEFT — 2PLEFT — 50 — 22B U293
AJ39/S403 ZBF253D-00 — J3PDOWN — 3PDOWN — 5C — 33C U303
AJ54/S416 ZBF253D-00 — J4PSHOOT21 — 4PS2 — 5A — 33C U316
AJ68/S424 ZBF253D-00 — GND4 — 36C U324
GND
AK13/S460 ZBF253D-00 — VGND — AVGND — 8E — 18A U349
銅メッキ線にてショート
AJ16/S382 ZBF253D-00 — J1PRIGHT — 1PRIGHT — 5E — 23A U282
AJ29/S394 ZBF253D-00 — J2PRIGHT — 2PRIGHT — 50 — 23B U294
AJ40/S404 ZBF253D-00 — J3PSHOOT11 — 3PS1 — 50 — 33C U304
AJ55/S417 ZBF253D-00 — J4PSHOOT31 — 4PS3 — 5A — 33C U317
AJ17/S383 ZBF253D-00 — J1PSHOOT11 — 1PS1 — 50 — 23A U283
AJ30/S395 ZBF253D-00 — J2PSHOOT11 — 2PS1 — 5C — 23B U295
AJ41/S405 ZBF253D-00 — J3PSHOOT21 — 3PS2 — 50 — 33C U305
AJ56/S418 ZBF253D-00 — J4PSTART — 4PSTART — 5A — 34C U318
AJ18/S384 ZBF253D-00 — J1PSHOOT21 — 1PS2 — 50 — 24A U284
AJ31/S396 ZBF253D-00 — J2PSHOOT21 — 2PS2 — 5C — 24B U296
AJ42/S406 ZBF253D-00 — J3PSHOOT31 — 3PS3 — 50 — 34C U306
AJ57/S419 ZBF253D-00 — J4PSER — SERVICE4 — 8C — 33C U319
AJ19/S385 ZBF253D-00 — J1PSHOOT31 — 1PS3 — 50 — 24A U285
AJ32/S397 ZBF253D-00 — J2PSHOOT31 — 2PS3 — 5C — 24B U297
AJ43/S407 ZBF253D-00 — J3PSTART — 3PSTART — 50 — 34C U307
AK25/S452 ZJS5101-221 — JRED — RED — 8C — 18D U351
AJ20/S386 ZBF253D-00 — J1PSHOOT41 — 1PS4 — 5E — 25A U286
AJ33/S398 ZBF253D-00 — J2PSHOOT41 — 2PS4 — 5E — 25B U298
AJ44/S408 ZBF253D-00 — J3PSER — SERVICE3 — 8C — 33C U308
AK26/S453 ZJS5101-221 — JGREEN — GREEN — 8C — 18D U352
AJ21/S387 ZBF253D-00 — J1PSHOOT51 — 1PS5 — 5E — 25A U287
AJ34/S399 ZBF253D-00 — J2PSHOOT51 — 2PS5 — 5E — 25B U299
AJ60/S420 ZBF253D-00 — J1PSER — SERVICE1 — 8C — 33C U320
AK27/S454 ZJS5101-221 — JBLUE — BLUE — 8C — 18D U353
AVGND — 8E

PROPRIETARY AND CONFIDENTIAL:

REPRODUCTION FORBIDDEN WITHOUT THE SPECIFIC WRITTEN PERMISSION OF KONAMI CO.,LTD., 4-3-1, TORANOMON, MINATOKU, TOKYO 105, JAPAN. THIS DRAWING IS ONLY CONDITIONALLY ISSUED. NEITHER RECEIPT NOR POSSESSION OF THIS DRAWING OR ANY OPERATING MANUAL RELATING TO KONAMI'S GAMES OR PRODUCTS CONTAINING THIS DRAWING CONFERS OR TRANSFERS ANY RIGHT IN OR LICENSE TO USE THE PRINTED CIRCUIT BOARDS RELATING TO THIS DRAWING OR OTHER SUBJECT MATTER OF THE DRAWING OR ANY DESIGN OR TECHNICAL INFORMATION SHOWN THEREON. EXCEPT FOR MANUFACTURE BY VENDORS OF KONAMI CO.,LTD. AND FOR MANUFACTURE UNDER KONAMI'S WRITTEN LICENSE, NO RIGHT IS GRANTED TO REPRODUCE, MAKE, HAVE MADE, USE OR SELL THIS DRAWING OR THE SUBJECT MATTER THEREOF INCLUDING, WITHOUT LIMITATION, THE PRINTED CIRCUIT BOARD OR OPERATING MANUAL RELATING THERETO, WHATSOEVER, UNLESS BY WRITTEN AGREEMENT WITH OR WRITTEN PERMISSION FROM KONAMI.
COPYRIGHT 1992 KONAMI CO.,LTD. ALL RIGHTS RESERVED.

KONAMI

KONAMI CO.,LTD.

DRAWING				
DESIGN	Y. MATSUI	TITLE	SCHEMATIC DIAGRAM	
DRAW	Y. MATSUI	SUBTITLE	JAMMA&3P&4P	
CHECK	Hashima	PAGE		
APPROVE	Nono	CODE NO.	354471C	
SCALE		REG. TYPE	GX300 PWB354192B	
TOLERANCE		SECURITY LEVEL	CONFIDENTIAL	
DATE	94. 3. 30			

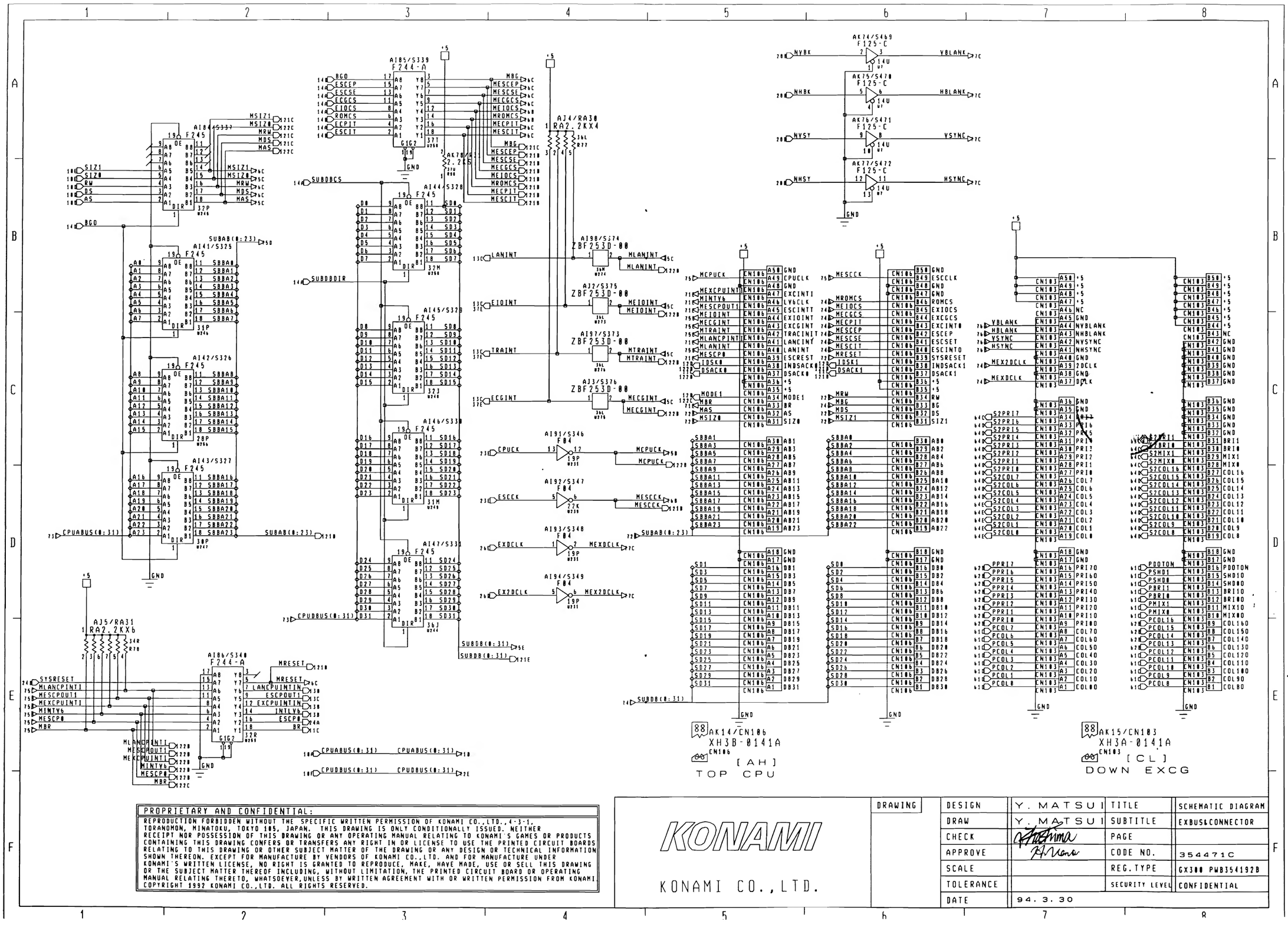

PROPRIETARY AND CONFIDENTIAL:

REPRODUCTION FORBIDDEN WITHOUT THE SPECIFIC WRITTEN PERMISSION OF KONAMI CO.,LTD., 4-3-1, TORANOMON, MINATOKU, TOKYO 105, JAPAN. THIS DRAWING IS ONLY CONDITIONALLY ISSUED. NEITHER RECEIPT NOR POSSESSION OF THIS DRAWING OR ANY OPERATING MANUAL RELATING TO KONAMI'S GAMES OR PRODUCTS CONTAINING THIS DRAWING CONFERS OR TRANSFERS ANY RIGHT IN OR LICENSE TO USE THE PRINTED CIRCUIT BOARDS RELATING TO THIS DRAWING OR OTHER SUBJECT MATTER OF THE DRAWING OR ANY DESIGN OR TECHNICAL INFORMATION SHOWN THEREON. EXCEPT FOR MANUFACTURE BY VENDORS OF KONAMI CO.,LTD. AND FOR MANUFACTURE UNDER KONAMI'S WRITTEN LICENSE, NO RIGHT IS GRANTED TO REPRODUCE, MAKE, HAVE MADE, USE OR SELL THIS DRAWING OR THE SUBJECT MATTER THEREOF INCLUDING, WITHOUT LIMITATION, THE PRINTED CIRCUIT BOARD OR OPERATING MANUAL RELATING THERETO, WHATSOEVER, UNLESS BY WRITTEN AGREEMENT WITH OR WRITTEN PERMISSION FROM KONAMI
COPYRIGHT 1992 KONAMI CO.,LTD. ALL RIGHTS RESERVED.

KONAMI

KONAMI CO.,LTD.

DRAWING	DESIGN	Y. MATSUI	TITLE: SCHEMATIC DIAGRAM
	DRAW	Y. MATSUI	SUBTITLE: EXBUS&CONNECTOR
	CHECK		PAGE:
	APPROVE		CODE NO.: 3544471C
	SCALE		REG.TYPE: GX300 PWB351912B
	TOLERANCE		SECURITY LEVEL: CONFIDENTIAL
	DATE	94.3.30	

AJ62/CN6
B4P-SHF-1AA
CN6 GUN 2P

AJ63/CN5
B4P-SHF-1AA
CN5 GUN 1P

SW1
SW2

PROPRIETARY AND CONFIDENTIAL:
REPRODUCTION FORBIDDEN WITHOUT THE SPECIFIC WRITTEN PERMISSION OF KONAMI CO.,LTD.,4-3-1, TORANOMON, MINATOKU, TOKYO 105, JAPAN. THIS DRAWING IS ONLY CONDITIONALLY ISSUED. NEITHER RECEIPT NOR POSSESSION OF THIS DRAWING OR ANY OPERATING MANUAL RELATING TO KONAMI'S GAMES OR PRODUCTS CONTAINING THIS DRAWING CONFERS OR TRANSFERS ANY RIGHT IN OR LICENSE TO USE THE PRINTED CIRCUIT BOARDS RELATING TO THIS DRAWING OR OTHER SUBJECT MATTER OF THE DRAWING OR ANY DESIGN OR TECHNICAL INFORMATION SHOWN THEREON. EXCEPT FOR MANUFACTURE BY VENDORS OF KONAMI CO.,LTD. AND FOR MANUFACTURE UNDER KONAMI'S WRITTEN LICENSE, NO RIGHT IS GRANTED TO REPRODUCE, MAKE, HAVE MADE, USE OR SELL THIS DRAWING OR THE SUBJECT MATTER THEREOF INCLUDING, WITHOUT LIMITATION, THE PRINTED CIRCUIT BOARD OR OPERATING MANUAL RELATING THERETO, WHATSOEVER,UNLESS BY WRITTEN AGREEMENT WITH OR WRITTEN PERMISSION FROM KONAMI.
COPYRIGHT 1992 KONAMI CO.,LTD. ALL RIGHTS RESERVED.

KONAMI

KONAMI CO.,LTD.

DRAWING			
DESIGN	Y. MATSU	TITLE	SCHEMATIC DIAGRAM
DRAW	Y. MATSU	SUBTITLE	10
CHECK		PAGE	
APPROVE		CODE NO.	354471C
SCALE		REG. TYPE	GX300 PWB354192B
TOLERANCE		SECURITY LEVEL	CONFIDENTIAL
DATE	94.3.30		

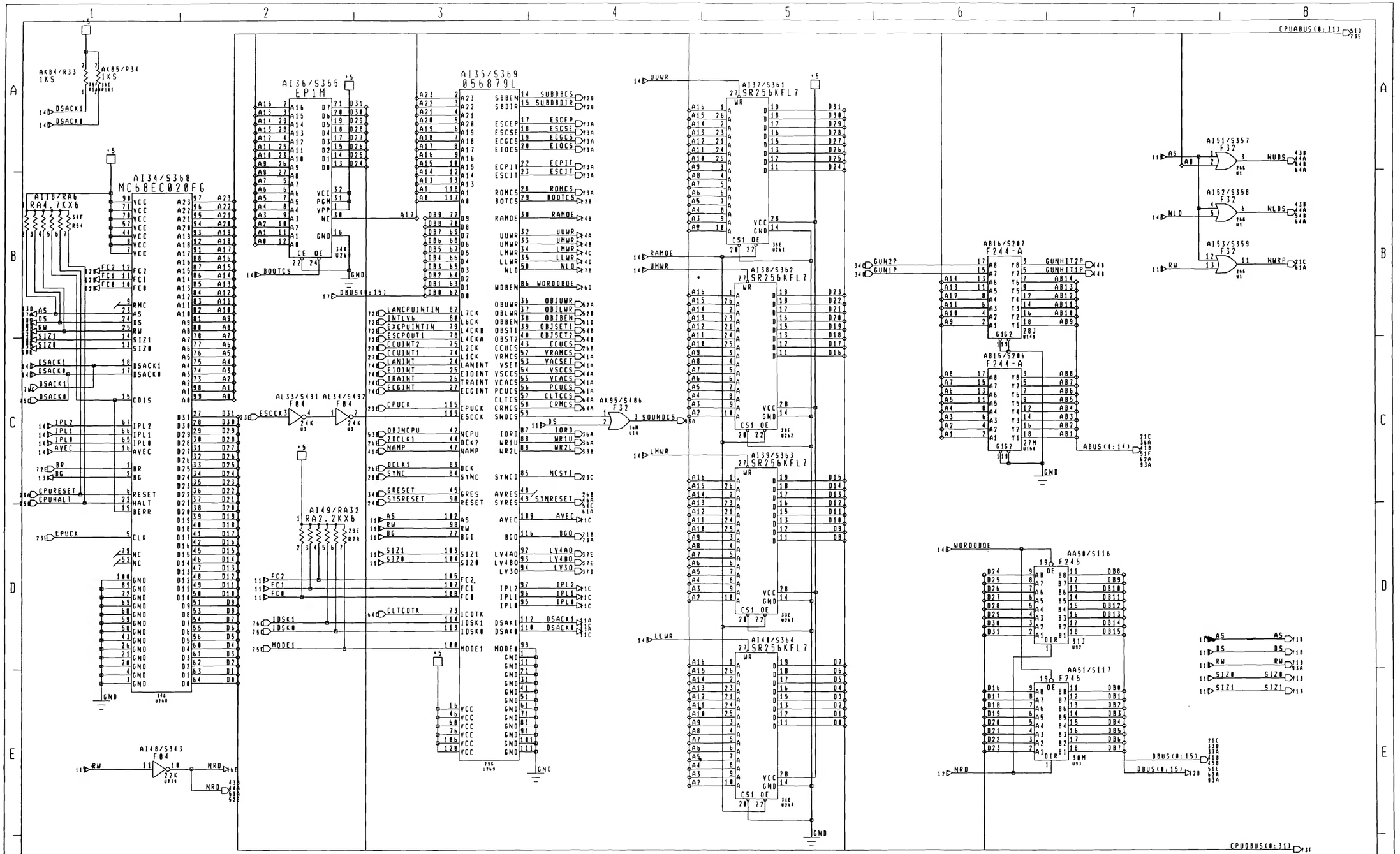
AK84/R33 1K5
AK85/R34 1K5
DSACK1
DSACK0
AI34/S368 MC68EC020FG
AI18/RA6 RA4.7KX6
AI36/S355 EP1M
AI35/S369 056879L
AI49/RA32 RA2.2KX6
AL33/S491 F04
AL34/S492 F04
AI48/S343 F04
AK95/S486 F32
AI37/S361 SR256KFL7
AI38/S362 SR256KFL7
AI39/S363 SR256KFL7
AI40/S364 SR256KFL7
AB16/S207 F244-A
AB15/S206 F244-A
AA50/S116 F245
AA51/S117 F245
AI51/S357 F32
AI52/S358 F32
AI53/S359 F32
CPUABUS(0:31)
CPUDBUS(0:31)
DBUS(0:15)
ABUS(0:14)
GND
PROPRIETARY AND CONFIDENTIAL:
REPRODUCTION FORBIDDEN WITHOUT THE SPECIFIC WRITTEN PERMISSION OF KONAMI CO.,LTD., 4-3-1, TORANOMON, MINATOKU, TOKYO 105, JAPAN. THIS DRAWING IS ONLY CONDITIONALLY ISSUED. NEITHER RECEIPT NOR POSSESSION OF THIS DRAWING OR ANY OPERATING MANUAL RELATING TO KONAMI'S GAMES OR PRODUCTS CONTAINING THIS DRAWING CONFERS OR TRANSFERS ANY RIGHT IN OR LICENSE TO USE THE PRINTED CIRCUIT BOARDS RELATING TO THIS DRAWING OR OTHER SUBJECT MATTER OF THE DRAWING OR ANY DESIGN OR TECHNICAL INFORMATION SHOWN THEREON. EXCEPT FOR MANUFACTURE BY VENDORS OF KONAMI CO.,LTD. AND FOR MANUFACTURE UNDER KONAMI'S WRITTEN LICENSE, NO RIGHT IS GRANTED TO REPRODUCE, MAKE, HAVE MADE, USE OR SELL THIS DRAWING OR THE SUBJECT MATTER THEREOF INCLUDING, WITHOUT LIMITATION, THE PRINTED CIRCUIT BOARD OR OPERATING MANUAL RELATING THERETO, WHATSOEVER, UNLESS BY WRITTEN AGREEMENT WITH OR WRITTEN PERMISSION FROM KONAMI
COPYRIGHT 1992 KONAMI CO.,LTD. ALL RIGHTS RESERVED.
KONAMI
KONAMI CO.,LTD.
DRAWING
DESIGN Y. MATSUI
DRAW Y. MATSUI
CHECK
APPROVE
SCALE
TOLERANCE
DATE 94.3.30
TITLE SCHEMATIC DIAGRAM
SUBTITLE MAIN CPU
PAGE
CODE NO. 354471C
REG. TYPE GX300 PWB3541928
SECURITY LEVEL CONFIDENTIAL

LETHAL ENFORCERS II
GUN FIGHTERS

SUB PCB LAYOUT

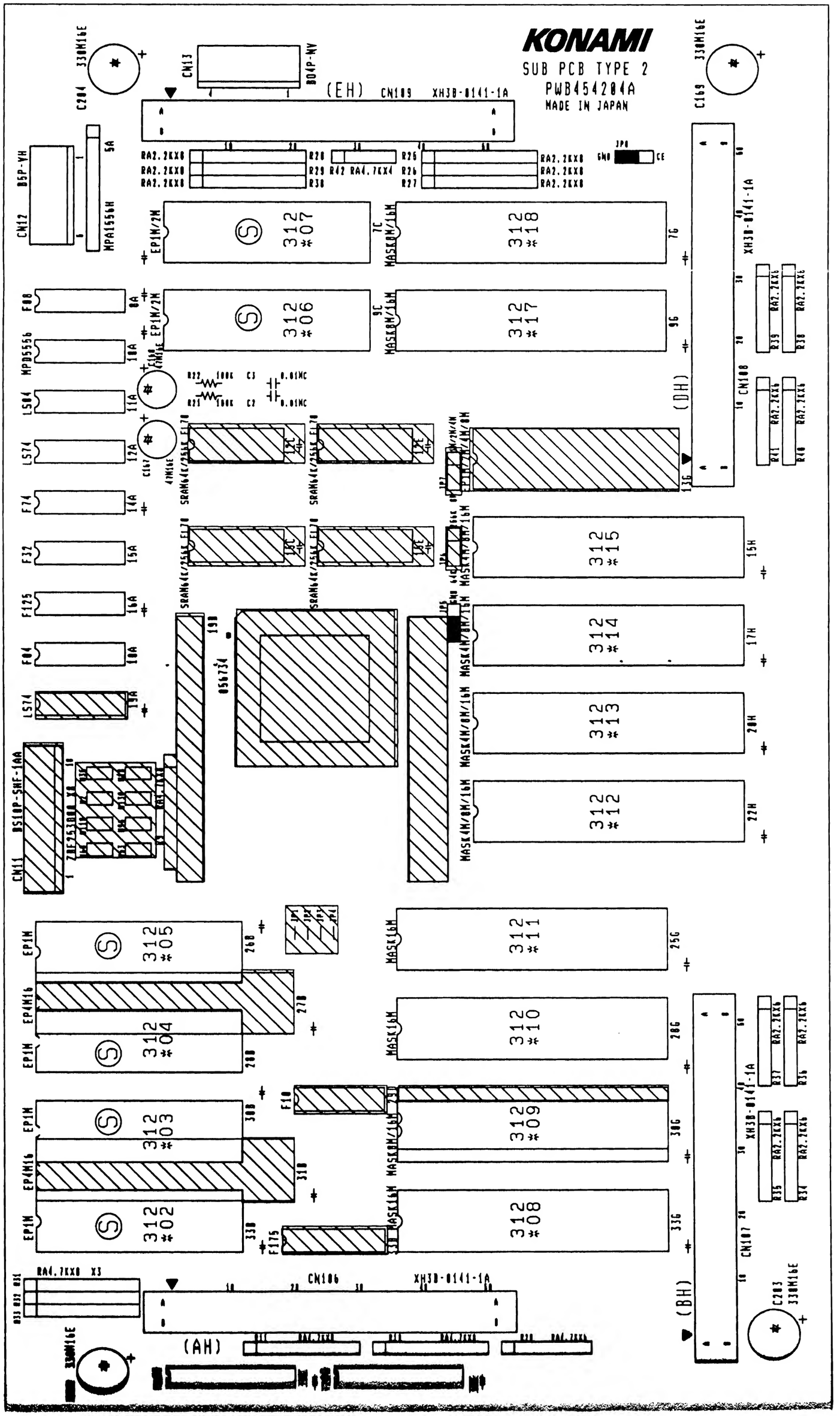

LETHAL ENFORCERS II GUN FIGHTERS

WIRING DIAGRAM

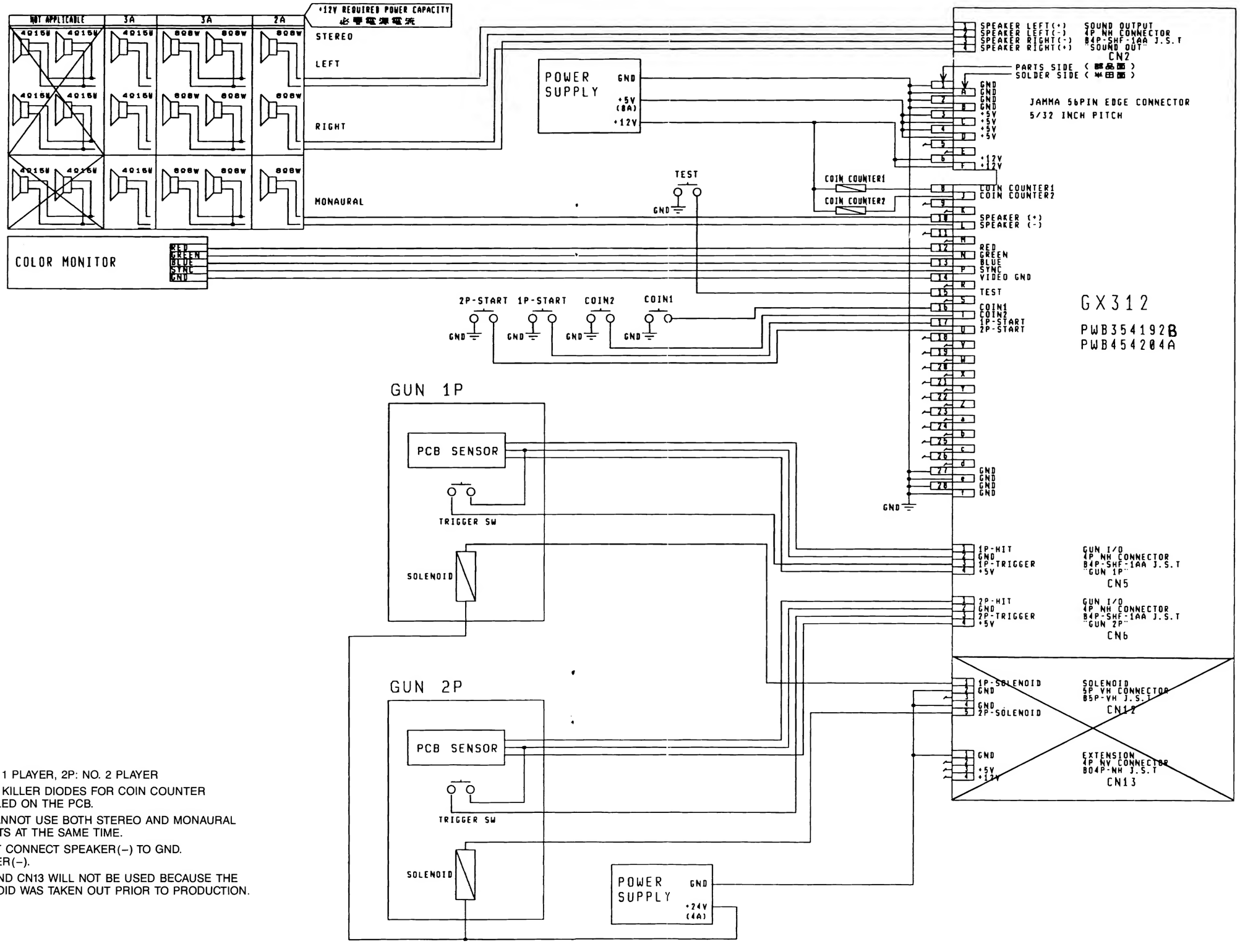

Note:

(1) 1P: NO. 1 PLAYER, 2P: NO. 2 PLAYER

(2) SURGE KILLER DIODES FOR COIN COUNTER INSTALLED ON THE PCB.

(3) YOU CANNOT USE BOTH STEREO AND MONAURAL OUTPUTS AT THE SAME TIME.

(4) DO NOT CONNECT SPEAKER(−) TO GND. SPEAKER(−).

(5) CN12 AND CN13 WILL NOT BE USED BECAUSE THE SOLENOID WAS TAKEN OUT PRIOR TO PRODUCTION.

LETHAL ENFORCERS II GUN FIGHTERS

MOTHER PCB LAYOUT

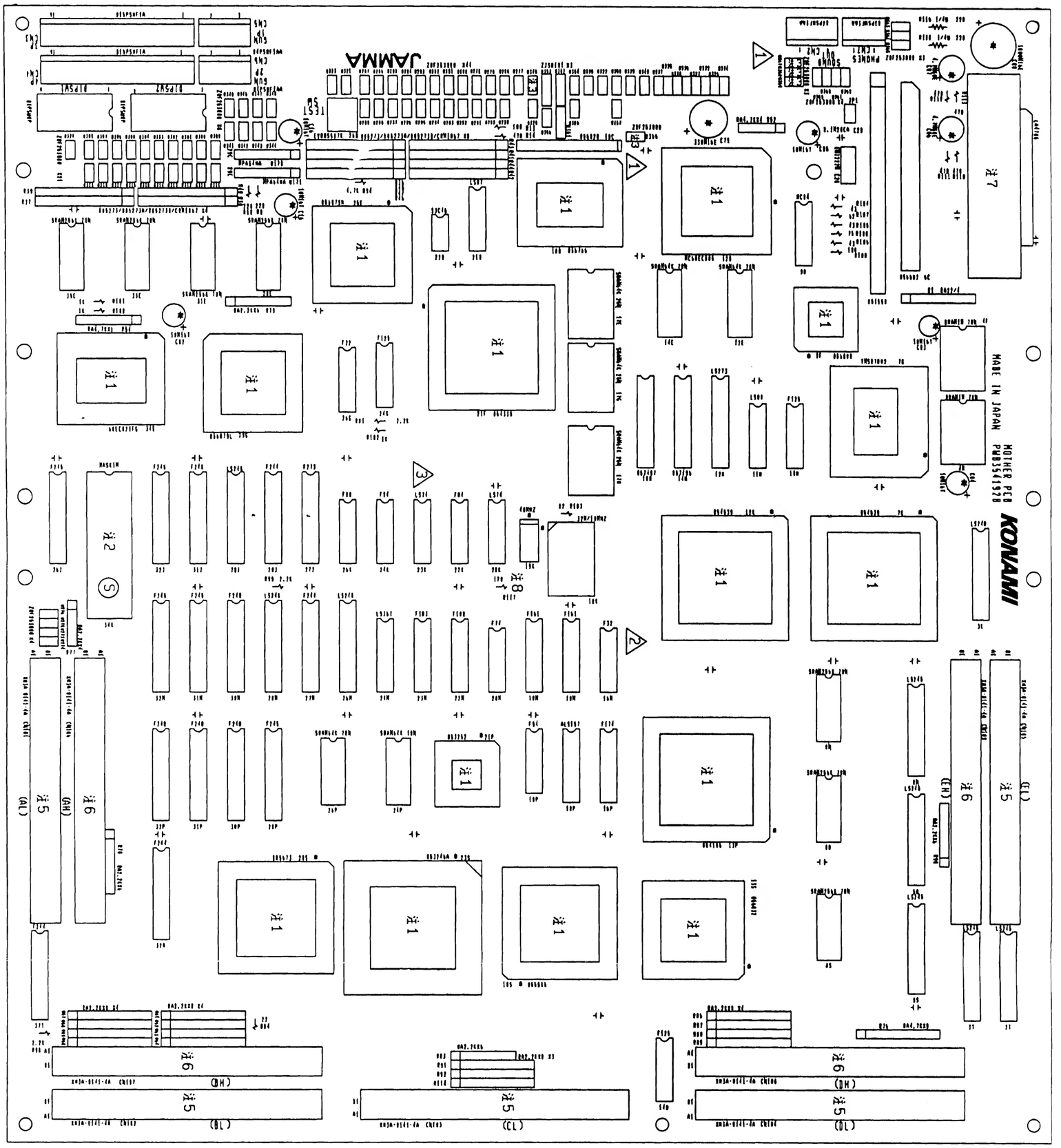

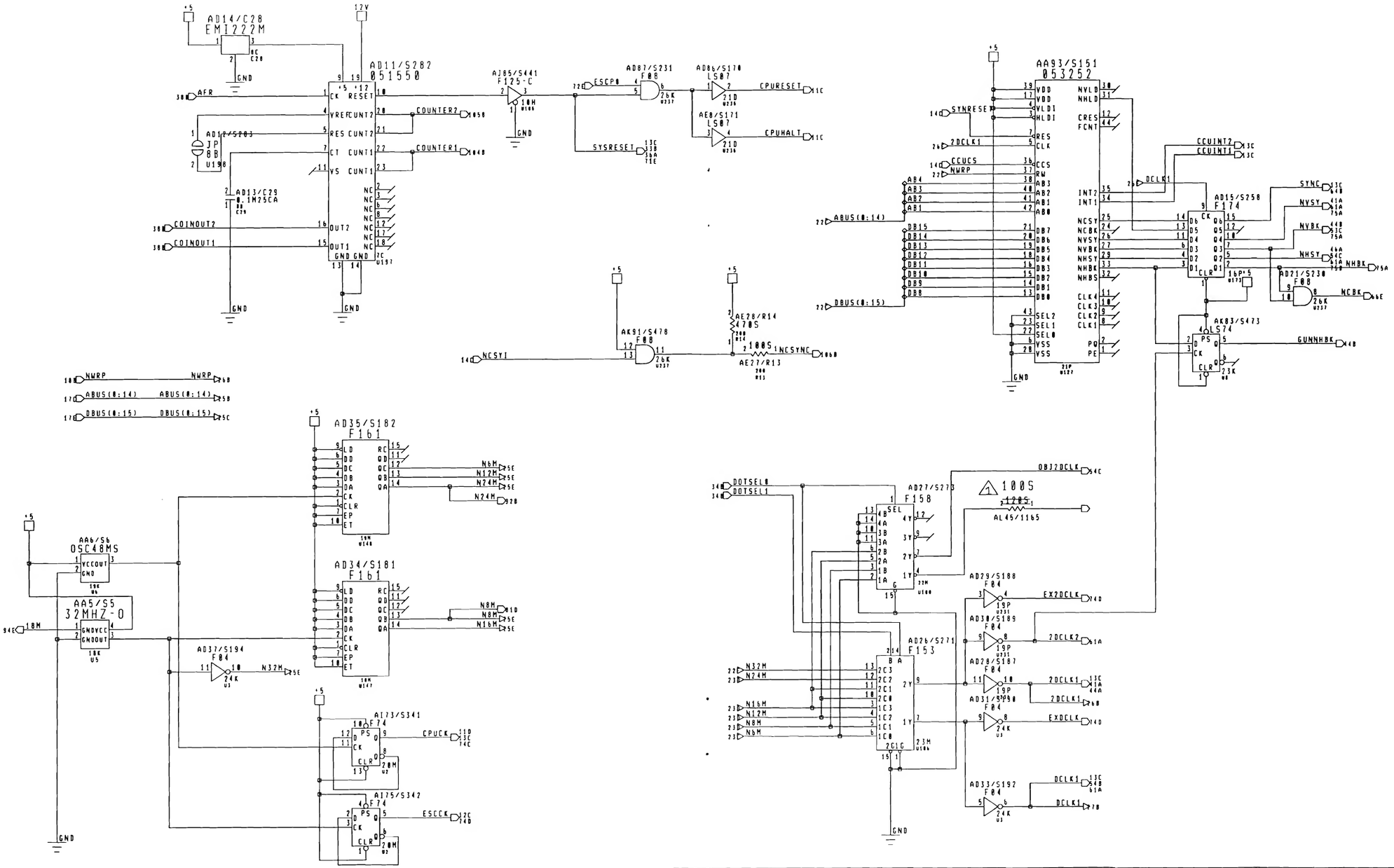

PROPRIETARY AND CONFIDENTIAL:
REPRODUCTION FORBIDDEN WITHOUT THE SPECIFIC WRITTEN PERMISSION OF KONAMI CO.,LTD.,4-3-1, TORANOMON, MINATOKU, TOKYO 105, JAPAN. THIS DRAWING IS ONLY CONDITIONALLY ISSUED. NEITHER RECEIPT NOR POSSESSION OF THIS DRAWING OR ANY OPERATING MANUAL RELATING TO KONAMI'S GAMES OR PRODUCTS CONTAINING THIS DRAWING CONFERS OR TRANSFERS ANY RIGHT IN OR LICENSE TO USE THE PRINTED CIRCUIT BOARDS RELATING TO THIS DRAWING OR OTHER SUBJECT MATTER OF THE DRAWING OR ANY DESIGN OR TECHNICAL INFORMATION SHOWN THEREON. EXCEPT FOR MANUFACTURE BY VENDORS OF KONAMI CO.,LTD. AND FOR MANUFACTURE UNDER KONAMI'S WRITTEN LICENSE, NO RIGHT IS GRANTED TO REPRODUCE, MAKE, HAVE MADE, USE OR SELL THIS DRAWING OR THE SUBJECT MATTER THEREOF INCLUDING, WITHOUT LIMITATION, THE PRINTED CIRCUIT BOARD OR OPERATING MANUAL RELATING THERETO, WHATSOEVER, UNLESS BY WRITTEN AGREEMENT WITH OR WRITTEN PERMISSION FROM KONAMI.
COPYRIGHT 1992 KONAMI CO.,LTD. ALL RIGHTS RESERVED.

KONAMI

KONAMI CO.,LTD.

DRAWING			
DESIGN	Y. MATSUI	TITLE	SCHEMATIC DIAGRAM
DRAW	Y. MATSUI	SUBTITLE	CLOCKGEN&CRTC
CHECK		PAGE	
APPROVE		CODE NO.	354471C
SCALE		REG.TYPE	GX300 PWB354192B
TOLERANCE		SECURITY LEVEL	CONFIDENTIAL
DATE	94.3.30		

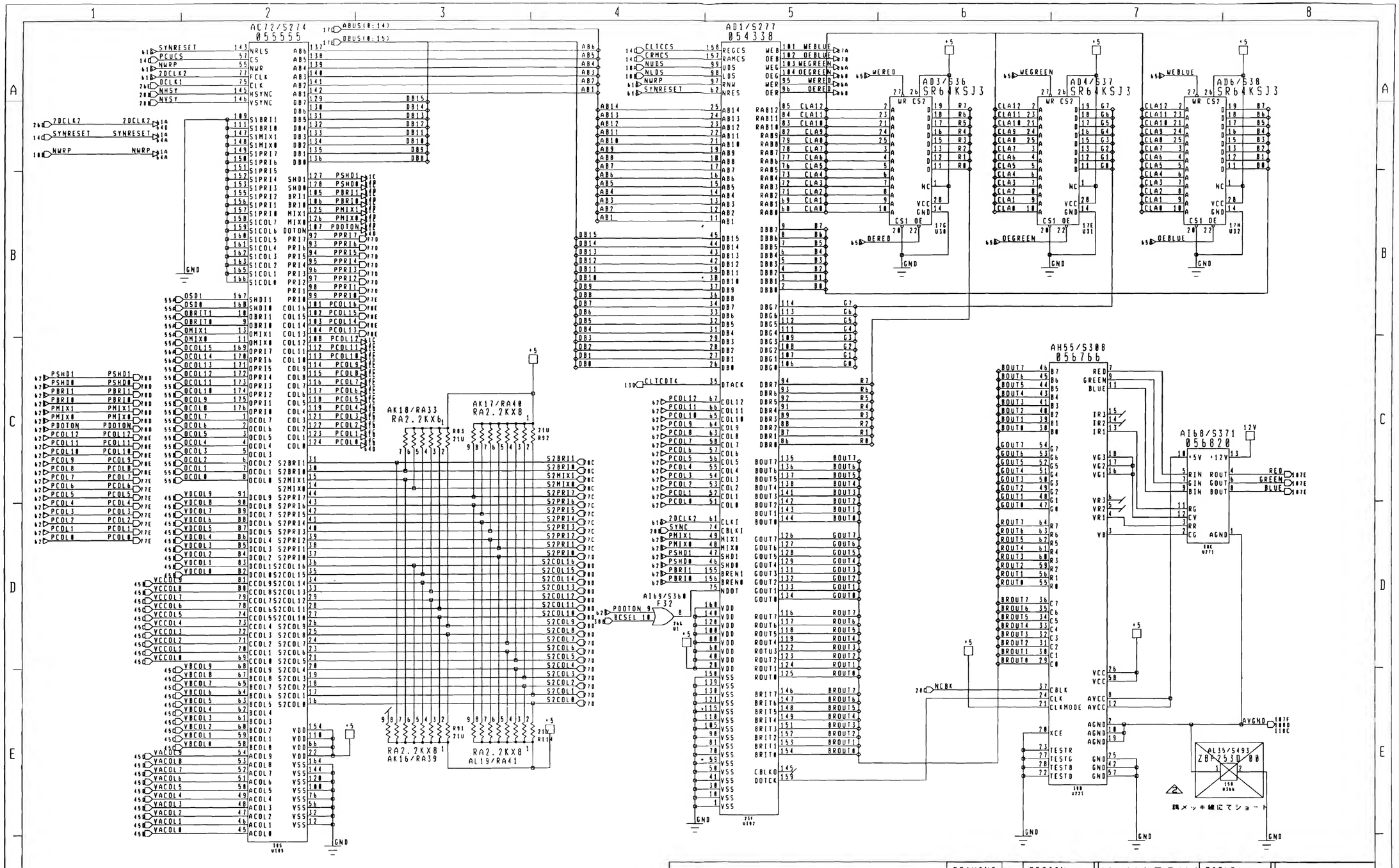

PROPRIETARY AND CONFIDENTIAL:

REPRODUCTION FORBIDDEN WITHOUT THE SPECIFIC WRITTEN PERMISSION OF KONAMI CO.,LTD.,4-3-1, TORANOMON, MINATOKU, TOKYO 105, JAPAN. THIS DRAWING IS ONLY CONDITIONALLY ISSUED. NEITHER RECEIPT NOR POSSESSION OF THIS DRAWING OR ANY OPERATING MANUAL RELATING TO KONAMI'S GAMES OR PRODUCTS CONTAINING THIS DRAWING CONFERS OR TRANSFERS ANY RIGHT IN OR LICENSE TO USE THE PRINTED CIRCUIT BOARDS RELATING TO THIS DRAWING OR OTHER SUBJECT MATTER OF THE DRAWING OR ANY DESIGN OR TECHNICAL INFORMATION SHOWN THEREON. EXCEPT FOR MANUFACTURE BY VENDORS OF KONAMI CO.,LTD. AND FOR MANUFACTURE UNDER KONAMI'S WRITTEN LICENSE, NO RIGHT IS GRANTED TO REPRODUCE, MAKE, HAVE MADE, USE OR SELL THIS DRAWING OR THE SUBJECT MATTER THEREOF INCLUDING, WITHOUT LIMITATION, THE PRINTED CIRCUIT BOARD OR OPERATING MANUAL RELATING THERETO, WHATSOEVER,UNLESS BY WRITTEN AGREEMENT WITH OR WRITTEN PERMISSION FROM KONAMI.
COPYRIGHT 1992 KONAMI CO.,LTD. ALL RIGHTS RESERVED.

KONAMI

KONAMI CO.,LTD.

DRAWING	DESIGN	Y. MATSUI	TITLE: SCHEMATIC DIAGRAM
	DRAW	Y. MATSUI	SUBTITLE: PCU2&CLTC&VDAC&VHIC
	CHECK		PAGE:
	APPROVE		CODE NO.: 354471C
	SCALE		REG.TYPE: GX300 PWB354192B
	TOLERANCE		SECURITY LEVEL: CONFIDENTIAL
	DATE	94.3.30	

AI55/S365
TMS57002

AI62/S367
056800

AF86/S302
056602

AF87/S304
LA4705-B

AI61/S366
DR1M4SJ8

AF81/S301
DR1M4SJ8

AI63/S332
AI64/S333
AI65/S334
AJ61/S338
LS245

AK33/S468
AK34/S469
AK35/S470
AK36/S471
ZBF253D-00

AL23/S490
AL22/S489
AL21/S488
ZBF253D-00

AJ64/CN2
B4P-SHF-1AA
CN2
SD

AL20/CN7
B3P-SHF-1AA
CN7
HEADPHONES OUT

PROPRIETARY AND CONFIDENTIAL:
REPRODUCTION FORBIDDEN WITHOUT THE SPECIFIC WRITTEN PERMISSION OF KONAMI CO.,LTD.,4-3-1, TORANOMON, MINATOKU, TOKYO 105, JAPAN. THIS DRAWING IS ONLY CONDITIONALLY ISSUED. NEITHER RECEIPT NOR POSSESSION OF THIS DRAWING OR ANY OPERATING MANUAL RELATING TO KONAMI'S GAMES OR PRODUCTS CONTAINING THIS DRAWING CONFERS OR TRANSFERS ANY RIGHT IN OR LICENSE TO USE THE PRINTED CIRCUIT BOARDS RELATING TO THIS DRAWING OR OTHER SUBJECT MATTER OF THE DRAWING OR ANY DESIGN OR TECHNICAL INFORMATION SHOWN THEREON. EXCEPT FOR MANUFACTURE BY VENDORS OF KONAMI CO.,LTD. AND FOR MANUFACTURE UNDER KONAMI'S WRITTEN LICENSE, NO RIGHT IS GRANTED TO REPRODUCE, MAKE, HAVE MADE, USE OR SELL THIS DRAWING OR THE SUBJECT MATTER THEREOF INCLUDING, WITHOUT LIMITATION, THE PRINTED CIRCUIT BOARD OR OPERATING MANUAL RELATING THERETO, WHATSOEVER, UNLESS BY WRITTEN AGREEMENT WITH OR WRITTEN PERMISSION FROM KONAMI.
COPYRIGHT 1992 KONAMI CO.,LTD. ALL RIGHTS RESERVED.

KONAMI

KONAMI CO.,LTD.

DRAWING	DESIGN	Y. MATSUI	TITLE: SCHEMATIC DIAGRAM
	DRAW	Y. MATSUI	SUBTITLE: DASP&MIRAC&SHIC
	CHECK		PAGE:
	APPROVE		CODE NO.: 354471C
	SCALE		REG. TYPE: GX300 PWB354192B
	TOLERANCE		SECURITY LEVEL: CONFIDENTIAL
	DATE	94. 3. 30	

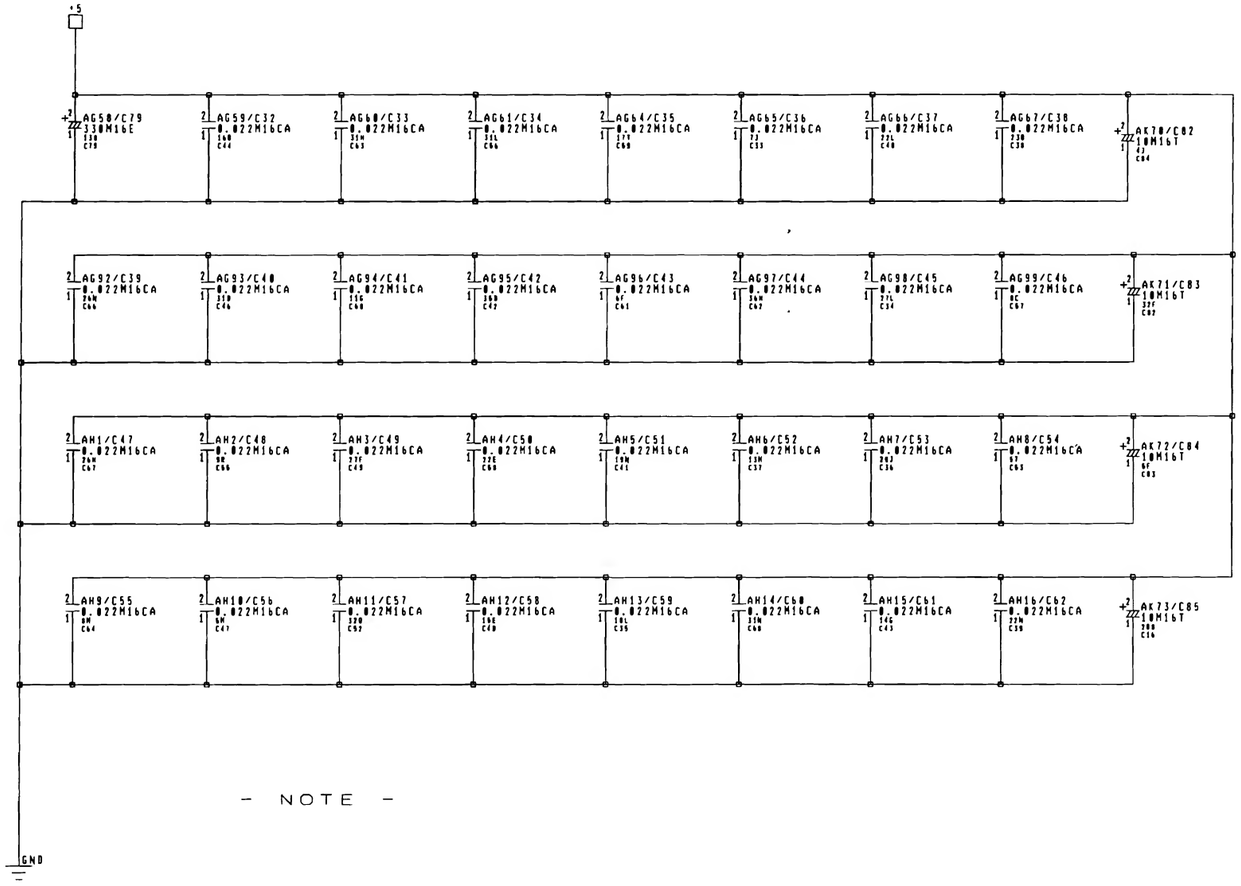

- NOTE -

: 5V

: 12V

1000M16E : 1000uF Electolyic capacitor
330M16E : 330uF Electolyic capacitor
4.7M50E : 4.7uF Tantalum capacitor
0.1M25CA : 0.1uF Ceramic capacitor (AXIAL LEAD TYPE)
0.022M25CA : 0.022uFCeramic capacitor(AXIAL LEAD TYPE)

EC NO.	DATE	PAGE	ENGINEERING CHANGE
1	94.1.17	2	RESISTANCE CHANGE
2	94.2.8	6,9	CHANGE TO TIN WIRE
3	94.3.30	4	ADDITION TO CAPASITOR
4	94.3.30	9	LOGICAL CHANGE

PROPRIETARY AND CONFIDENTIAL:
REPRODUCTION FORBIDDEN WITHOUT THE SPECIFIC WRITTEN PERMISSION OF KONAMI CO.,LTD.,4-3-1, TORANOMON, MINATOKU, TOKYO 105, JAPAN. THIS DRAWING IS ONLY CONDITIONALLY ISSUED. NEITHER RECEIPT NOR POSSESSION OF THIS DRAWING OR ANY OPERATING MANUAL RELATING TO KONAMI'S GAMES OR PRODUCTS CONTAINING THIS DRAWING CONFERS OR TRANSFERS ANY RIGHT IN OR LICENSE TO USE THE PRINTED CIRCUIT BOARDS RELATING TO THIS DRAWING OR OTHER SUBJECT MATTER OF THE DRAWING OR ANY DESIGN OR TECHNICAL INFORMATION SHOWN THEREON. EXCEPT FOR MANUFACTURE BY VENDORS OF KONAMI CO.,LTD. AND FOR MANUFACTURE UNDER KONAMI'S WRITTEN LICENSE, NO RIGHT IS GRANTED TO REPRODUCE, MAKE, HAVE MADE, USE OR SELL THIS DRAWING OR THE SUBJECT MATTER THEREOF INCLUDING, WITHOUT LIMITATION, THE PRINTED CIRCUIT BOARD OR OPERATING MANUAL RELATING THERETO, WHATSOEVER,UNLESS BY WRITTEN AGREEMENT WITH OR WRITTEN PERMISSION FROM KONAMI.
COPYRIGHT 1992 KONAMI CO.,LTD. ALL RIGHTS RESERVED.

KONAMI

KONAMI CO.,LTD.

DRAWING

DESIGN	Y.MATSUI	TITLE	SCHEMATIC DIAGRAM
DRAW	Y.MATSUI	SUBTITLE	PASS CON
CHECK		PAGE	
APPROVE		CODE NO.	354471C
SCALE		REG.TYPE	GX300 PWB354192B
TOLERANCE		SECURITY LEVEL	CONFIDENTIAL
DATE	94.3.30		

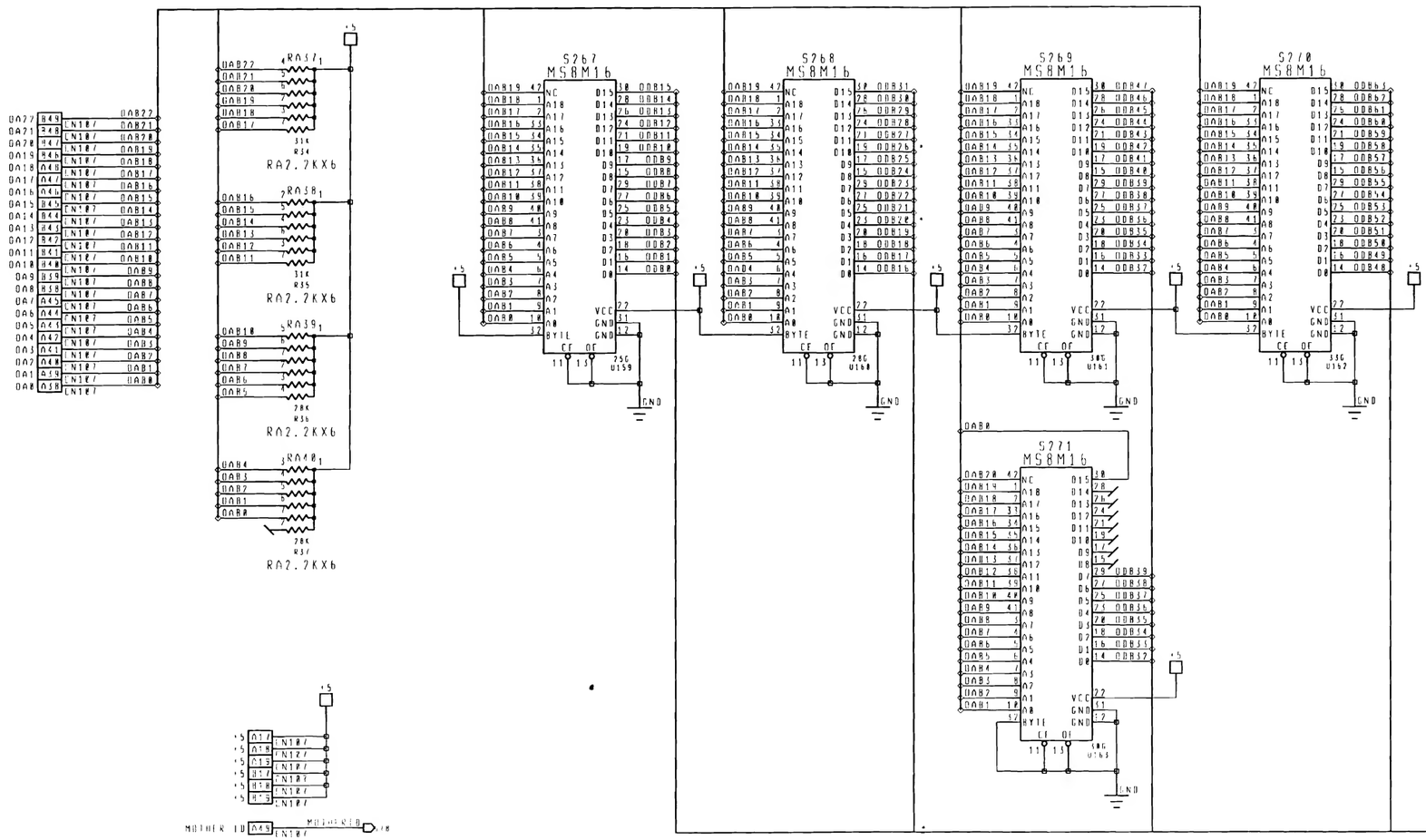

PROPRIETARY AND CONFIDENTIAL:
REPRODUCTION FORBIDDEN WITHOUT THE SPECIFIC WRITTEN PERMISSION OF KONAMI CO.,LTD.
4-4-1, TURANOMON, MINATOKU, TOKYO 105, JAPAN. THIS DRAWING IS ONLY CONDITIONALLY ISSUED. NEITHER RECEIPT NOR POSSESSION OF THIS DRAWING OR ANY OPERATING MANUAL RELATING TO KONAMI'S GAMES OR PRODUCTS CONTAINING THIS DRAWING CONFERS OR TRANSFERS ANY RIGHT IN OR LICENSE TO USE THE PRINTED CIRCUIT BOARDS RELATING TO THIS DRAWING OR OTHER SUBJECT MATTER OF THE DRAWING OR ANY DESIGN OR TECHNICAL INFORMATION SHOWN THEREON, EXCEPT FOR MANUFACTURE BY VENDORS OF KONAMI CO.,LTD. AND FOR MANUFACTURE UNDER KONAMI'S WRITTEN LICENSE. NO RIGHT IS GRANTED TO REPRODUCE, MAKE, HAVE MADE, USE OR SELL THIS DRAWING OR THE SUBJECT MATTER THEREOF INCLUDING, WITHOUT LIMITATION, THE PRINTED CIRCUIT BOARD OR OPERATING MANUAL RELATING THERETO, WHATSOEVER, UNLESS BY WRITTEN AGREEMENT WITH OR WRITTEN PERMISSION FROM KONAMI
COPYRIGHT 1992 KONAMI CO.,LTD. ALL RIGHTS RESERVED.

KONAMI CO.,LTD.

DRAWING	DESIGN	T.Murayama	TITLE: SCHEMATIC DIAGRAM
	DRAW	T.Murayama	SUBTITLE: OBJ
	CHECK		PAGE:
	APPROVE		CODE NO.: 354624
	SCALE		REG.TYPE: SUB PCB TYPE 2
	TOLERANCE		SECURITY LEVEL: CONFIDENTIAL
	DATE	1994. 3. 3	

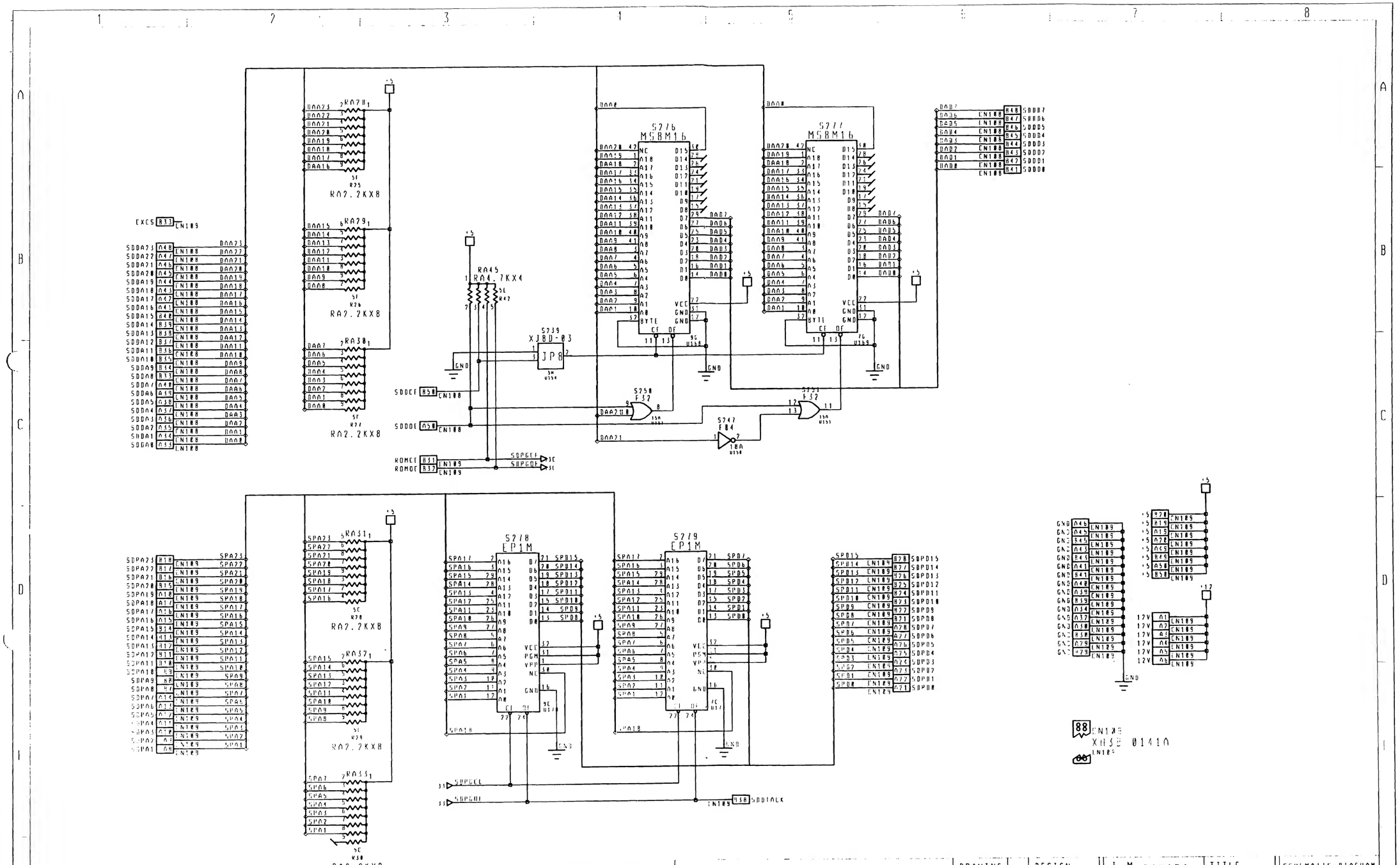

PROPRIETARY AND CONFIDENTIAL:
REPRODUCTION FORBIDDEN WITHOUT THE SPECIFIC WRITTEN PERMISSION OF KONAMI CO.,LTD.,4-3-1, TORANOMON, MINATOKU, TOKYO 105, JAPAN. THIS DRAWING IS ONLY CONDITIONALLY ISSUED. NEITHER RECEIPT NOR POSSESSION OF THIS DRAWING OR ANY OPERATING MANUAL RELATING TO KONAMI'S GAMES OR PRODUCTS CONTAINING THIS DRAWING CONFERS OR TRANSFERS ANY RIGHT IN OR LICENSE TO USE THE PRINTED CIRCUIT BOARDS RELATING TO THIS DRAWING OR OTHER SUBJECT MATTER OF THE DRAWING OR ANY DESIGN OR TECHNICAL INFORMATION SHOWN THEREON. EXCEPT FOR MANUFACTURE BY VENDORS OF KONAMI CO.,LTD. AND FOR MANUFACTURE UNDER KONAMI'S WRITTEN LICENSE, NO RIGHT IS GRANTED TO REPRODUCE, MAKE, HAVE MADE, USE OR SELL THIS DRAWING OR THE SUBJECT MATTER THEREOF INCLUDING, WITHOUT LIMITATION, THE PRINTED CIRCUIT BOARD OR OPERATING MANUAL RELATING THERETO, WHATSOEVER, UNLESS BY WRITTEN AGREEMENT WITH OR WRITTEN PERMISSION FROM KONAMI.
COPYRIGHT 1992 KONAMI CO.,LTD. ALL RIGHTS RESERVED.

KONAMI

KONAMI CO.,LTD.

DRAWING				
DESIGN	T.Murayama	TITLE	SCHEMATIC DIAGRAM	
DRAW	T.Murayama	SUBTITLE	SOUND	
CHECK	[signature]			
APPROVE	[signature]	CODE NO.	354624	
SCALE		REG.TYPE	SUB PCB TYPE 2	
TOLERANCE		SECURITY LEVEL	CONFIDENTIAL	
DATE	1994. 3. 3			

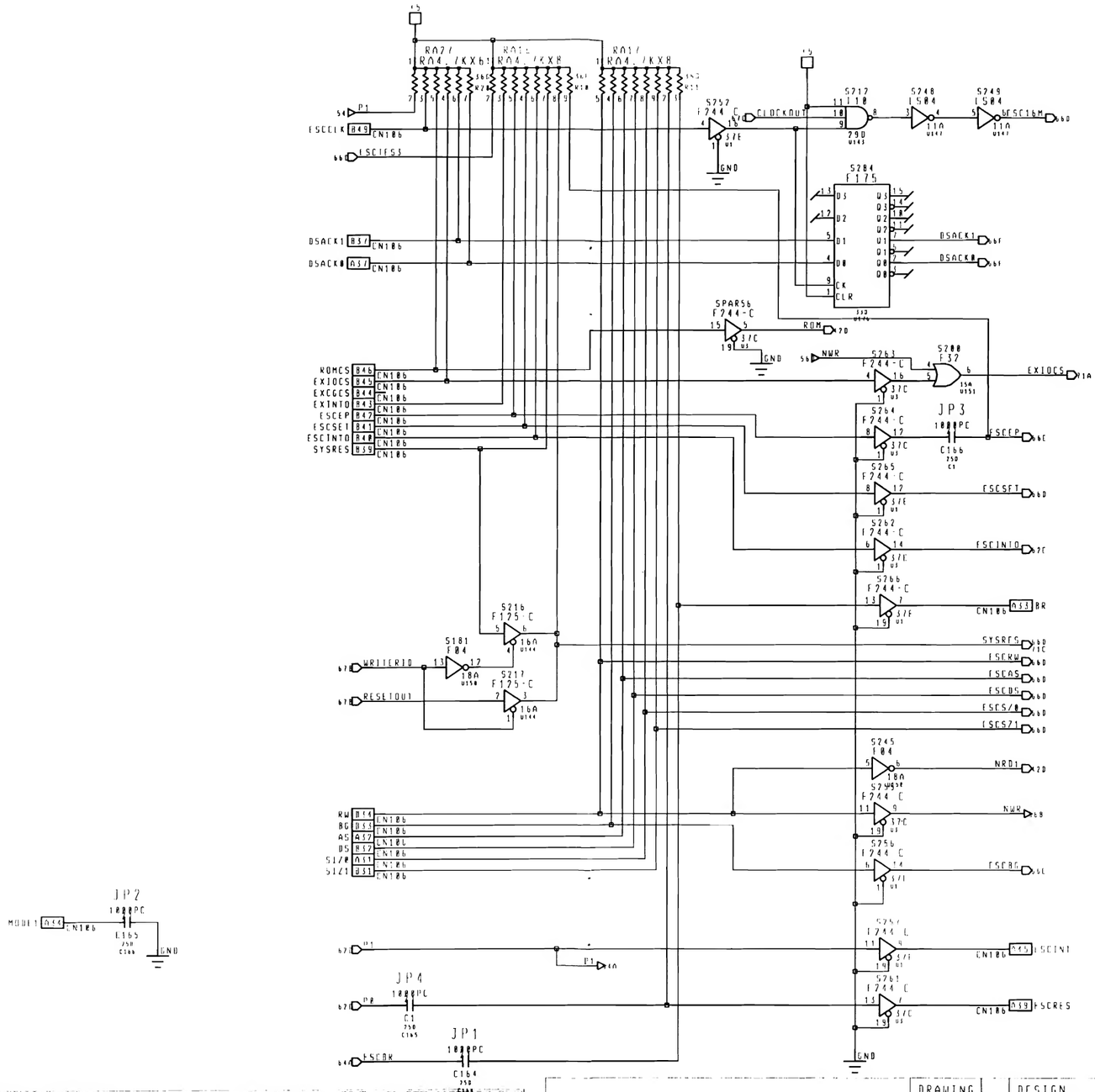

PROPRIETARY AND CONFIDENTIAL:
REPRODUCTION FORBIDDEN WITHOUT THE SPECIFIC WRITTEN PERMISSION OF KONAMI CO.,LTD.,4 5 1, TORANOMON, MINATOKU, TOKYO 105, JAPAN. THIS DRAWING IS ONLY CONDITIONALLY ISSUED. NEITHER RECEIPT NOR POSSESSION OF THIS DRAWING OR ANY OPERATING MANUAL RELATING TO KONAMI'S GAMES OR PRODUCTS CONTAINING THIS DRAWING CONFERS OR TRANSFERS ANY RIGHT IN OR LICENSE TO USE THE PRINTED CIRCUIT BOARDS RELATING TO THIS DRAWING OR OTHER SUBJECT MATTER OF THE DRAWING OR ANY DESIGN OR TECHNICAL INFORMATION SHOWN THEREON. EXCEPT FOR MANUFACTURE BY VENDORS OF KONAMI CO.,LTD. AND FOR MANUFACTURE UNDER KONAMI'S WRITTEN LICENSE, NO RIGHT IS GRANTED TO REPRODUCE, MAKE, HAVE MADE, USE OR SELL THIS DRAWING OR THE SUBJECT MATTER THEREOF INCLUDING, WITHOUT LIMITATION, THE PRINTED CIRCUIT BOARD OR OPERATING MANUAL RELATING THERETO, WHATSOEVER, UNLESS BY WRITTEN AGREEMENT WITH OR WRITTEN PERMISSION FROM KONAMI.
COPYRIGHT 1992 KONAMI CO.,LTD. ALL RIGHTS RESERVED.

KONAMI

KONAMI CO.,LTD.

DRAWING	DESIGN	I.Murayama	TITLE	SCHEMATIC DIAGRAM
	DRAW	I.Murayama	SUBTITLE	ESCCLK
	CHECK			
	APPROVE		CODE NO.	554624
	SCALE		REG.TYPE	SUB PCB TYPE 2
	TOLERANCE		SECURITY LEVEL	CONFIDENTIAL
	DATE	1994. 5. 3		