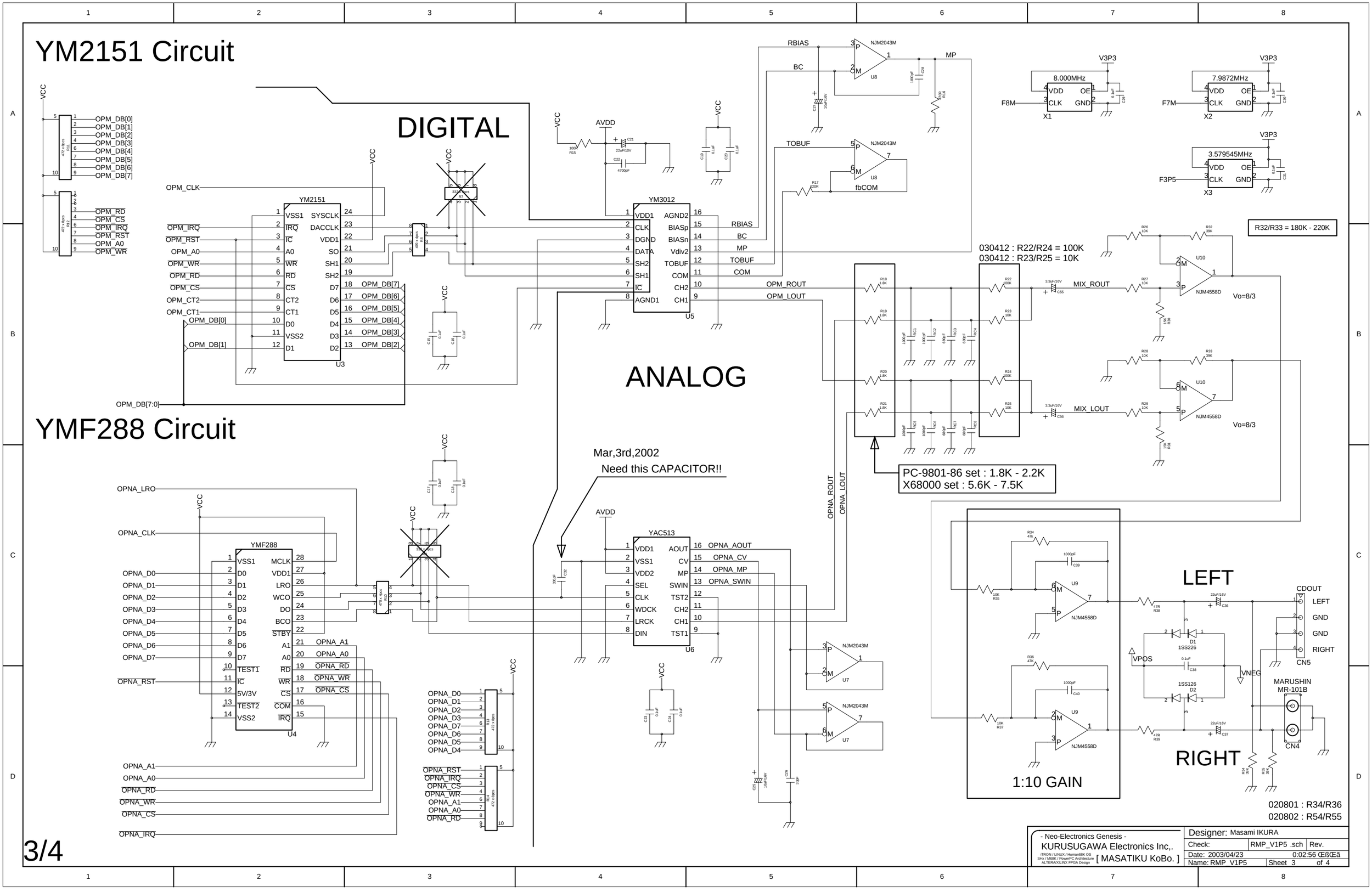
YM2151 Circuit
DIGITAL
YMF288 Circuit
ANALOG
Mar,3rd,2002
Need this CAPACITOR!!
YM2151
YM3012
YMF288
YAC513
NJM2043M
NJM4558D
8.000MHz
7.9872MHz
3.579545MHz
R32/R33 = 180K - 220K
030412 : R22/R24 = 100K
030412 : R23/R25 = 10K
PC-9801-86 set : 1.8K - 2.2K
X68000 set : 5.6K - 7.5K
LEFT
RIGHT
1:10 GAIN
MARUSHIN
MR-101B
020801 : R34/R36
020802 : R54/R55
- Neo-Electronics Genesis -
KURUSUGAWA Electronics Inc,.
[MASATIKU KoBo.]
Designer: Masami IKURA
Check: RMP_V1P5 .sch Rev.
Date: 2003/04/23 0:02:56 ŒßŒã
Name: RMP_V1P5 Sheet 3 of 4

3/4