# VII Schematics and Wiring Diagrams

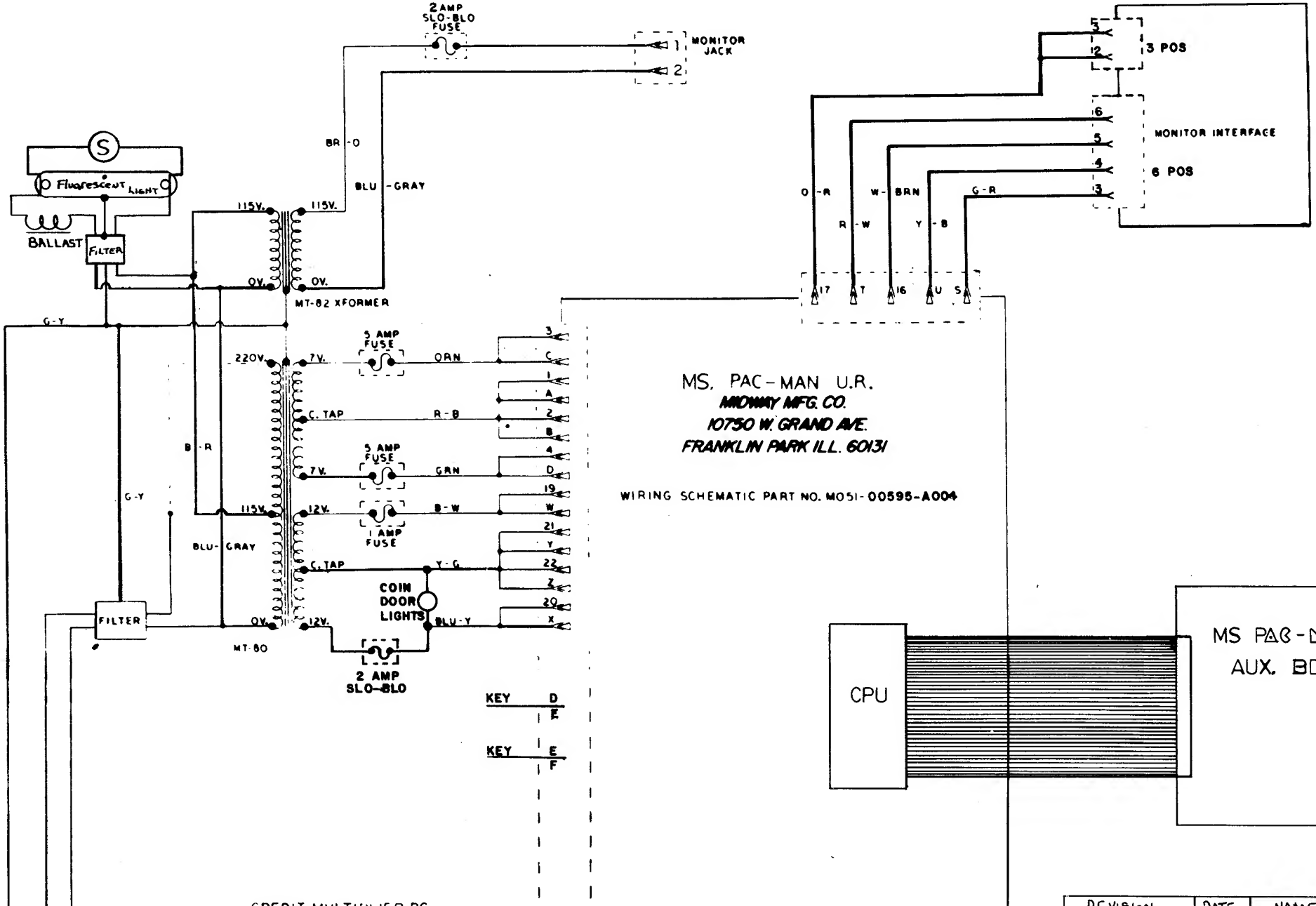
2 AMP SLO-BLO FUSE
MONITOR JACK
1
2
S
FLUORESCENT LIGHT
BALLAST
FILTER
BR-O
BLU-GRAY
115V.
115V.
0V.
0V.
MT-82 XFORMER
G-Y
220V.
7V.
5 AMP FUSE
ORN
C. TAP
R-B
B-R
7V.
5 AMP FUSE
GRN
115V.
12V.
B-W
1 AMP FUSE
BLU-GRAY
C. TAP
Y-G
COIN DOOR LIGHTS
BLU-Y
FILTER
0V.
12V.
MT-80
2 AMP SLO-BLO
3 POS
MONITOR INTERFACE
6 POS
O-R
R-W
W-BRN
Y-B
G-R
17
T
16
U
S
MS. PAC-MAN U.R.
MIDWAY MFG. CO.
10750 W. GRAND AVE.
FRANKLIN PARK ILL. 60131
WIRING SCHEMATIC PART NO. M051-00595-A004
KEY D F
KEY E F
CPU
MS PAC-MAN AUX. BD.

| REVISION | DATE | NAME |
|---|---|---|
| CREDIT MULT & FLUORESCENT LIGHT | 12/7/81 | V. CAPORUSSO |
| | | |

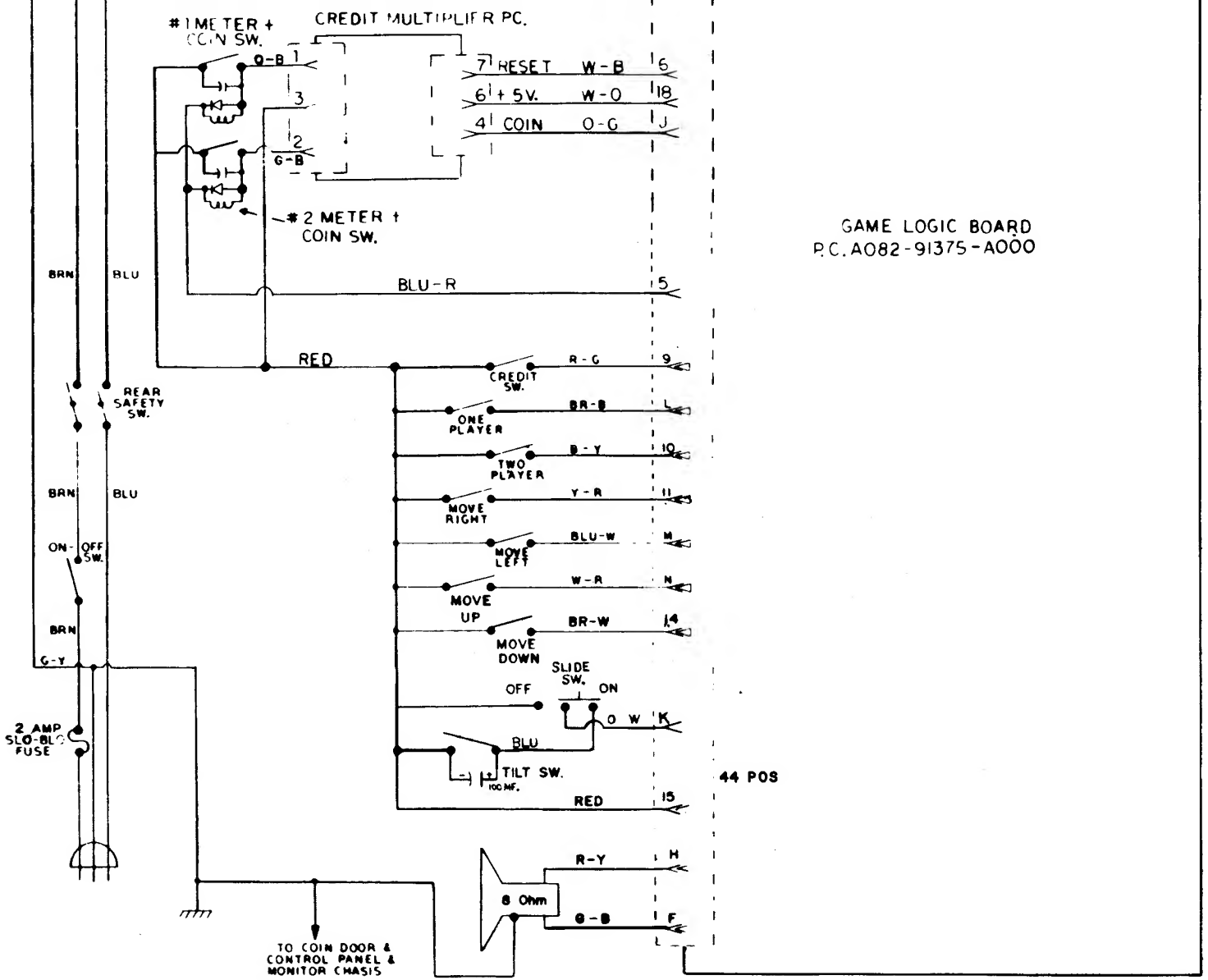

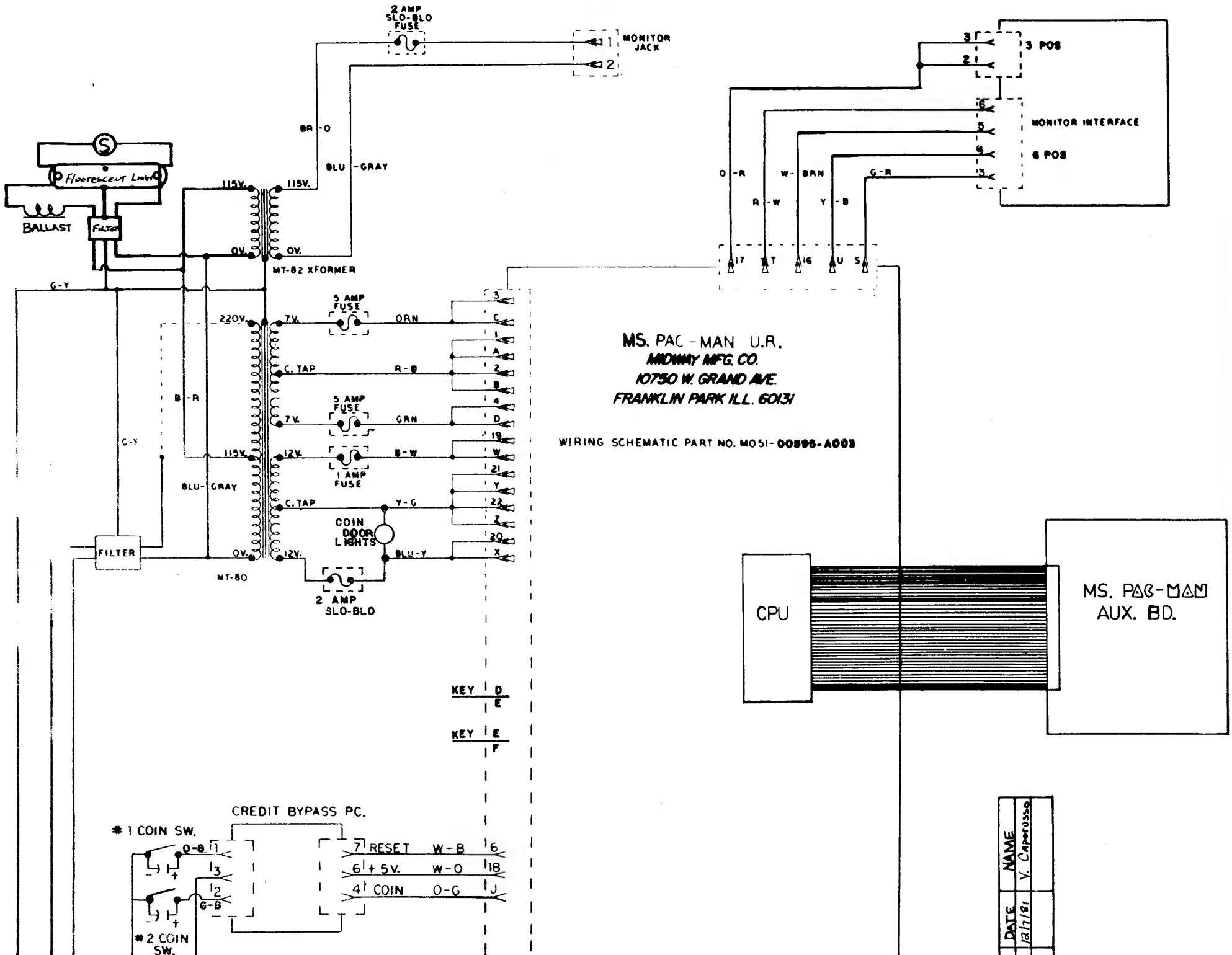
2 AMP SLO-BLO FUSE
MONITOR JACK
BR-O
BLU-GRAY
Fluorescent Light
BALLAST
FILTER
115V.
0V.
MT-82 XFORMER
G-Y
220V.
7V.
5 AMP FUSE
ORN
C. TAP
R-B
B-R
GRN
12V.
1 AMP FUSE
B-W
BLU-GRAY
Y-G
COIN DOOR LIGHTS
BLU-Y
FILTER
MT-80
2 AMP SLO-BLO
3 POS
MONITOR INTERFACE
6 POS
O-R
W-BRN
G-R
R-W
Y-B
MS. PAC-MAN U.R.
MIDWAY MFG. CO.
10750 W. GRAND AVE.
FRANKLIN PARK ILL. 60131
WIRING SCHEMATIC PART NO. MO51-00595-A003
CPU
MS. PAC-MAN AUX. BD.
KEY D E
KEY E F
CREDIT BYPASS PC.
#1 COIN SW.
#2 COIN SW.
O-B
G-B
RESET W-B
+5V. W-O
COIN O-G
DATE 12/7/81
NAME Y. Caprusso

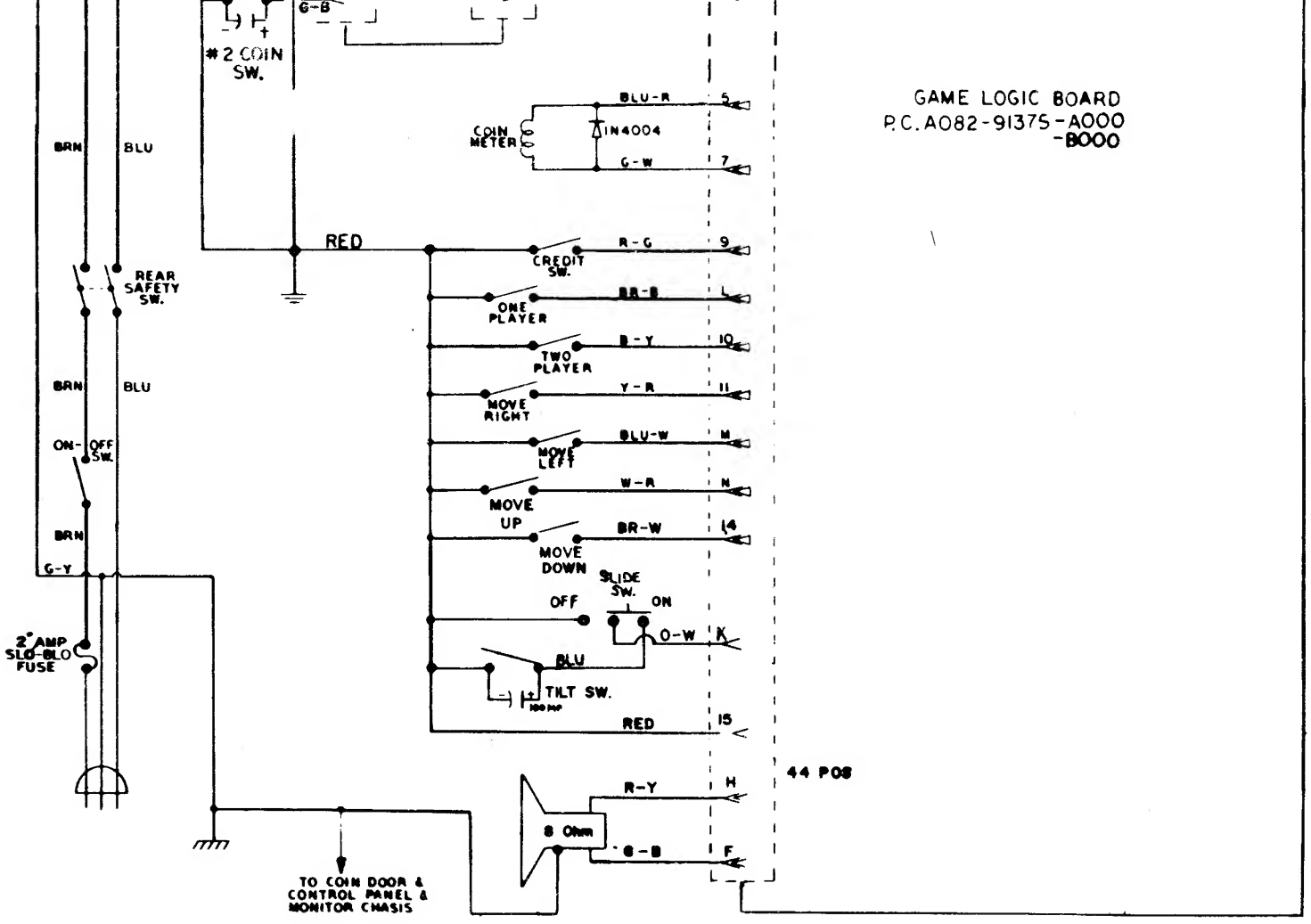


| REVISION | DATE |
| --- | --- |
| Fluorescent Lights | 12/7/81 |

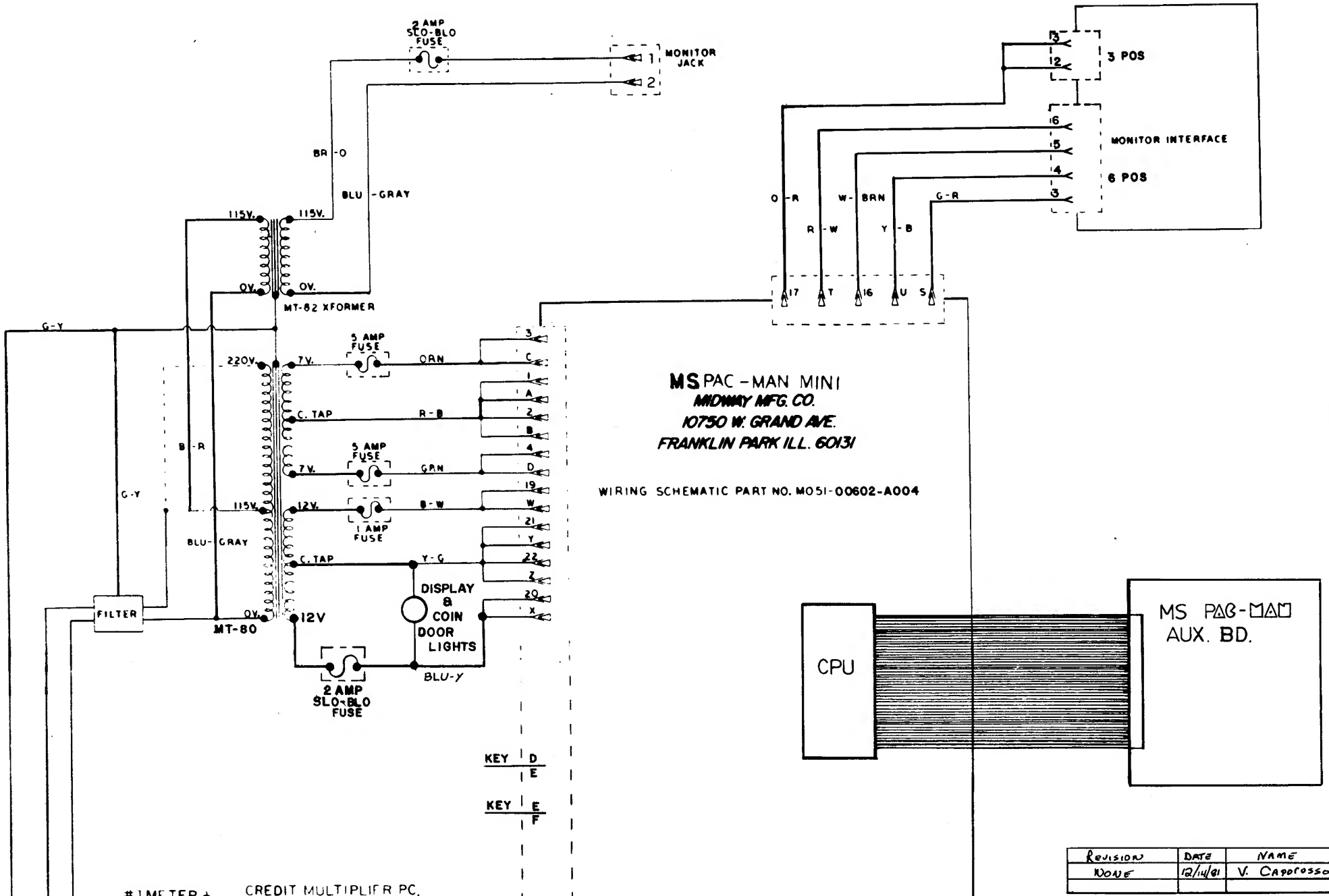


| REVISION | DATE | NAME |
|---|---|---|
| NONE | 12/14/81 | V. CAPOROSSO |
| | | |

| REVISION | DATE | NAME |
|---|---|---|
| NONE | 12/14/81 | V. CAPOROSSO |
| | | |

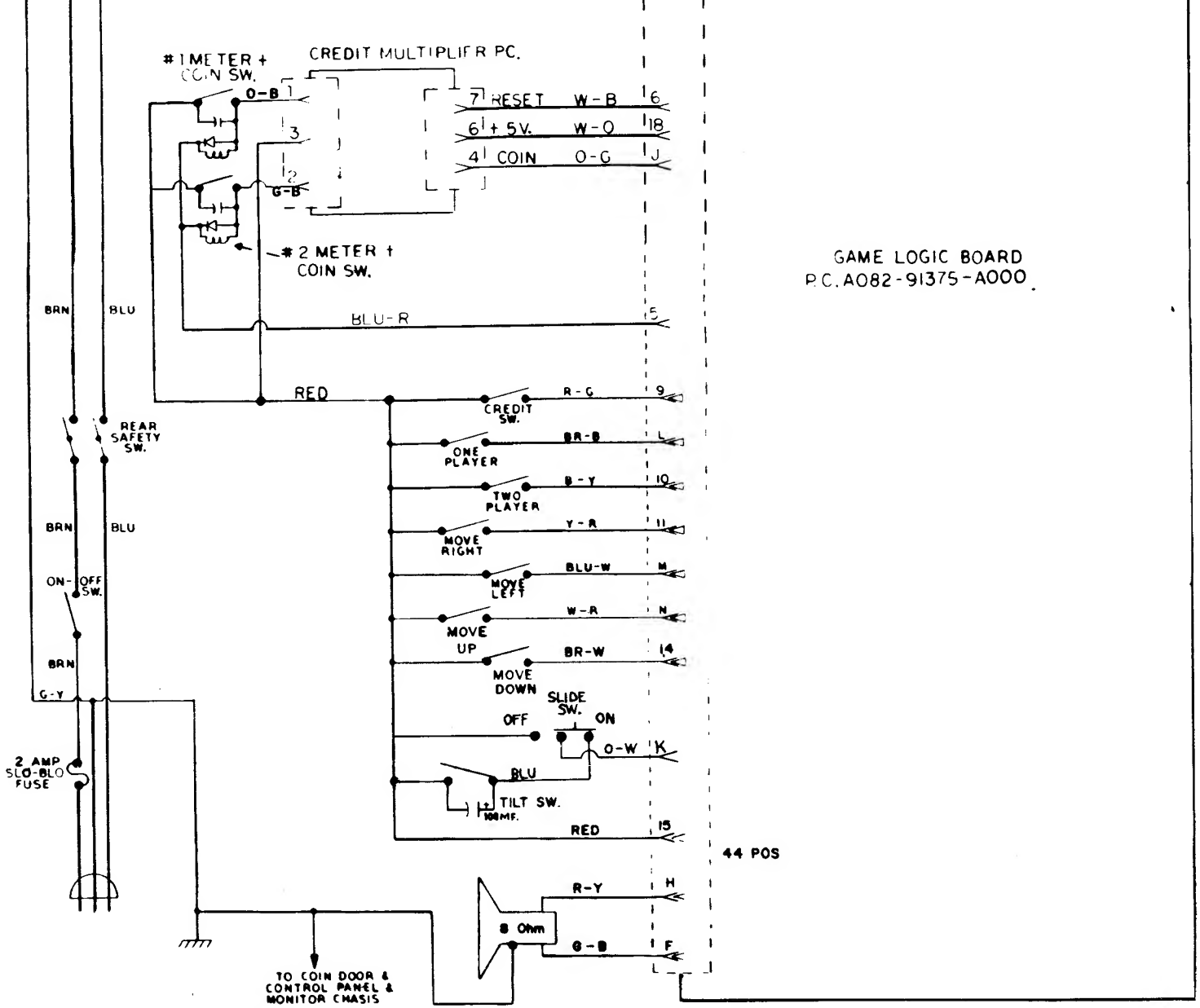

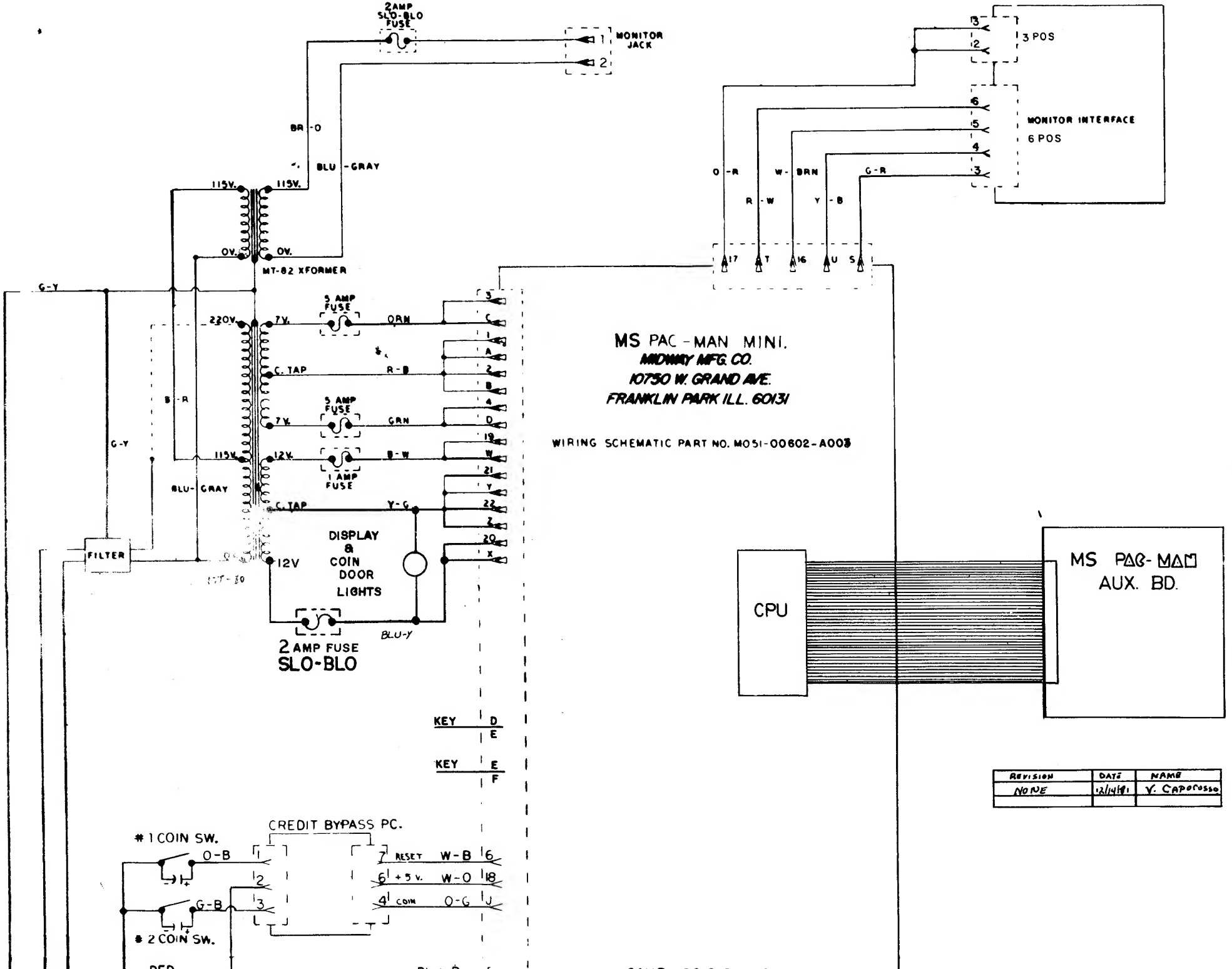
2AMP SLO-BLO FUSE
MONITOR JACK
3 POS
MONITOR INTERFACE 6 POS
BR-O
BLU-GRAY
115V.
OV.
MT-82 XFORMER
G-Y
220V.
7V.
5 AMP FUSE
ORN
C.TAP
R-B
B-R
GRN
12V.
B-W
1 AMP FUSE
Y-G
BLU-GRAY
FILTER
DISPLAY & COIN DOOR LIGHTS
2 AMP FUSE SLO-BLO
BLU-Y
O-R
W-BRN
G-R
R-W
Y-B
MS PAC-MAN MINI.
MIDWAY MFG. CO.
10750 W. GRAND AVE.
FRANKLIN PARK ILL. 60131
WIRING SCHEMATIC PART NO. M051-00602-A003
CPU
MS PAC-MAN AUX. BD.
KEY D/E
KEY E/F
CREDIT BYPASS PC.
#1 COIN SW.
#2 COIN SW.
O-B
G-B
RESET W-B
+5 V. W-O
COIN O-G
REVISION | DATE | NAME
NONE | 12/14/81 | V. Caporosso

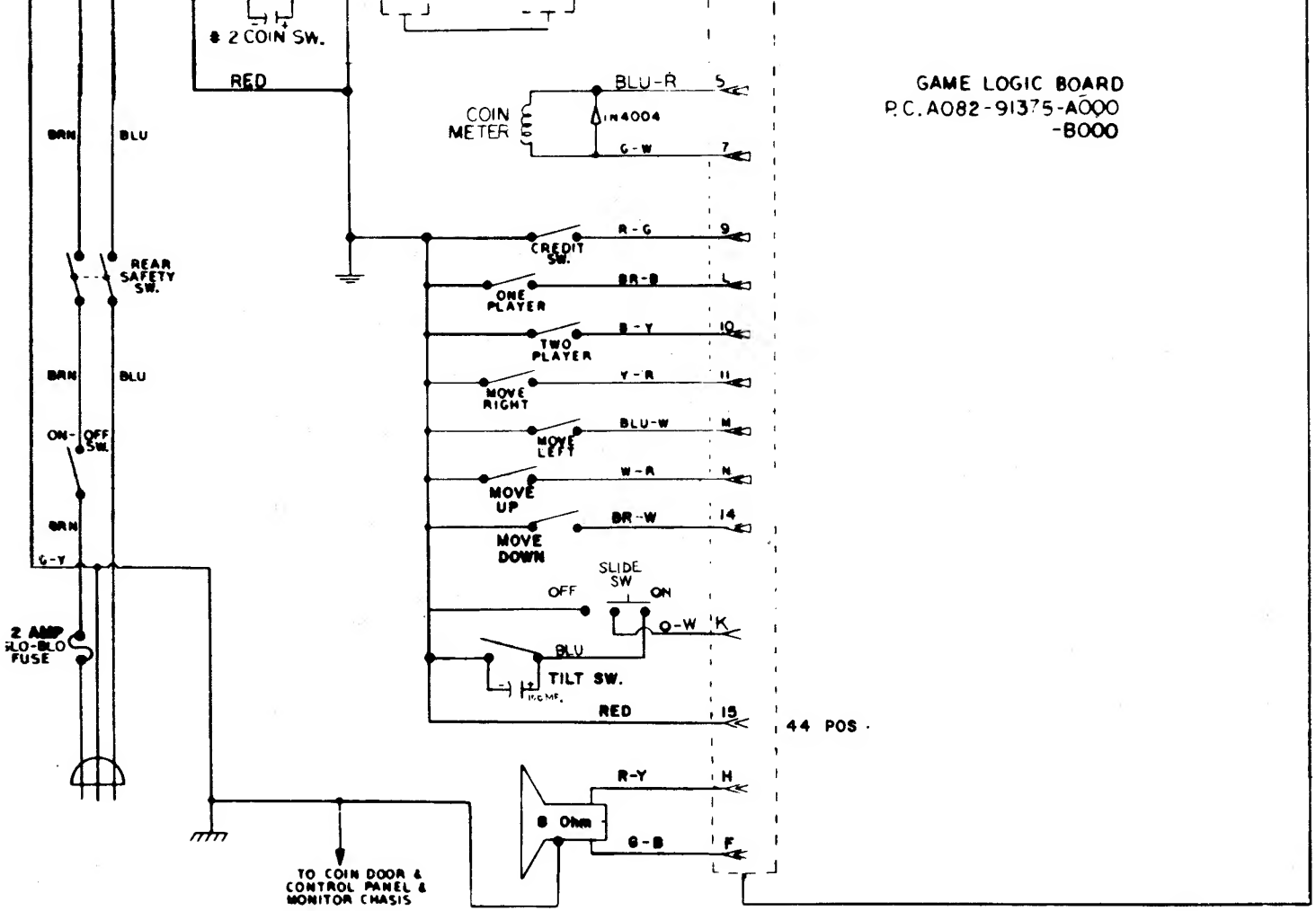
GAME LOGIC BOARD
P.C. A082-91375-A000
-B000
# 2 COIN SW.
RED
BLU-R
5
COIN METER
1N4004
G-W
7
BRN
BLU
REAR SAFETY SW.
R-G
9
CREDIT SW.
ONE PLAYER
BR-B
L
TWO PLAYER
B-Y
10
MOVE RIGHT
Y-R
11
MOVE LEFT
BLU-W
M
MOVE UP
W-R
N
MOVE DOWN
BR-W
14
ON-OFF SW.
G-Y
SLIDE SW
OFF
ON
O-W
K
2 AMP SLO-BLO FUSE
BLU
TILT SW.
RED
15
44 POS.
R-Y
H
8 Ohm
G-B
F
TO COIN DOOR & CONTROL PANEL & MONITOR CHASIS

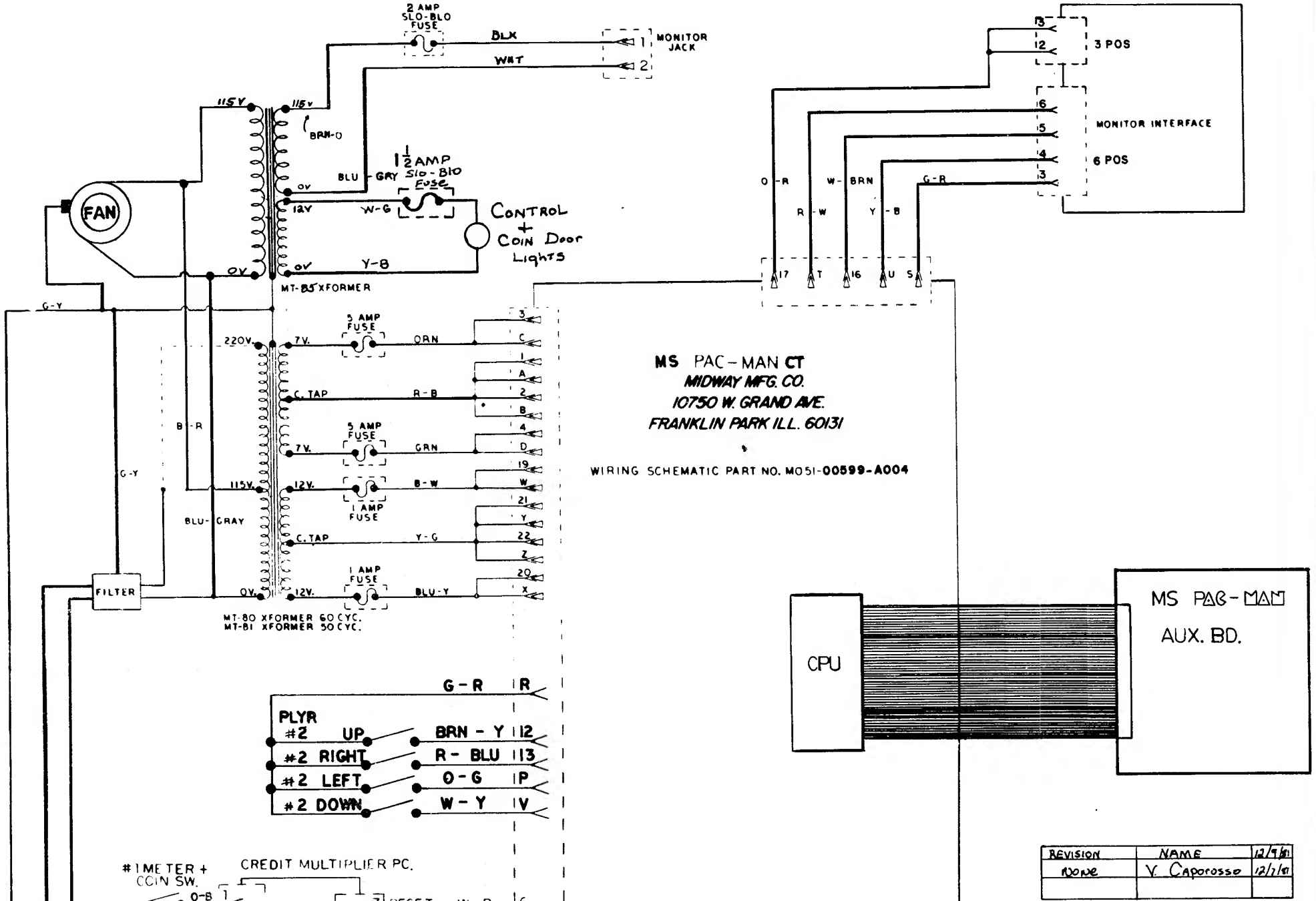


| REVISION | NAME | 12/9/81 |
|---|---|---|
| NONE | V. Caporosso | 12/7/81 |
| | | |

| | | |
|---|---|---|
| None | Y Caporosso | 12/1/81 |
| | | |

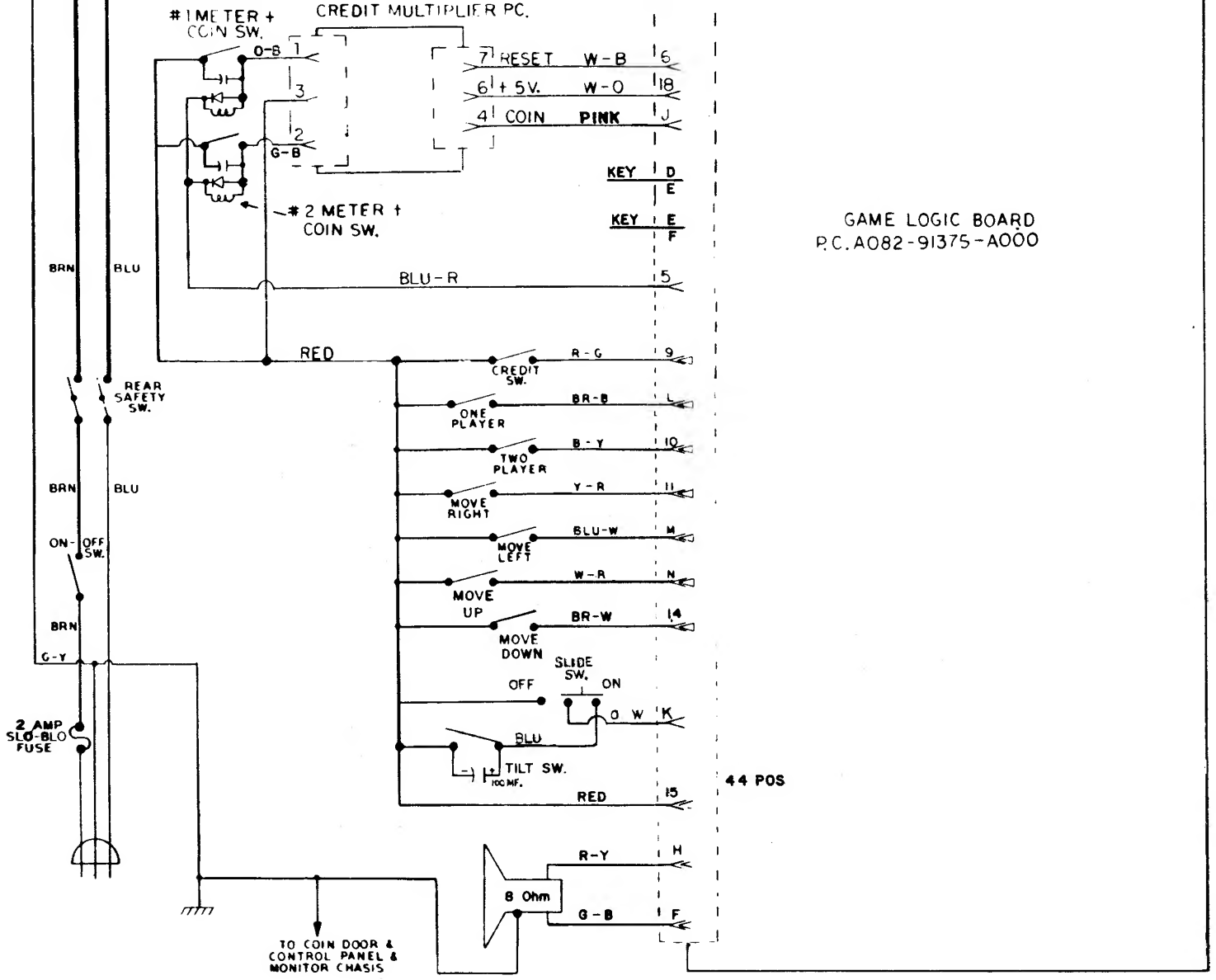

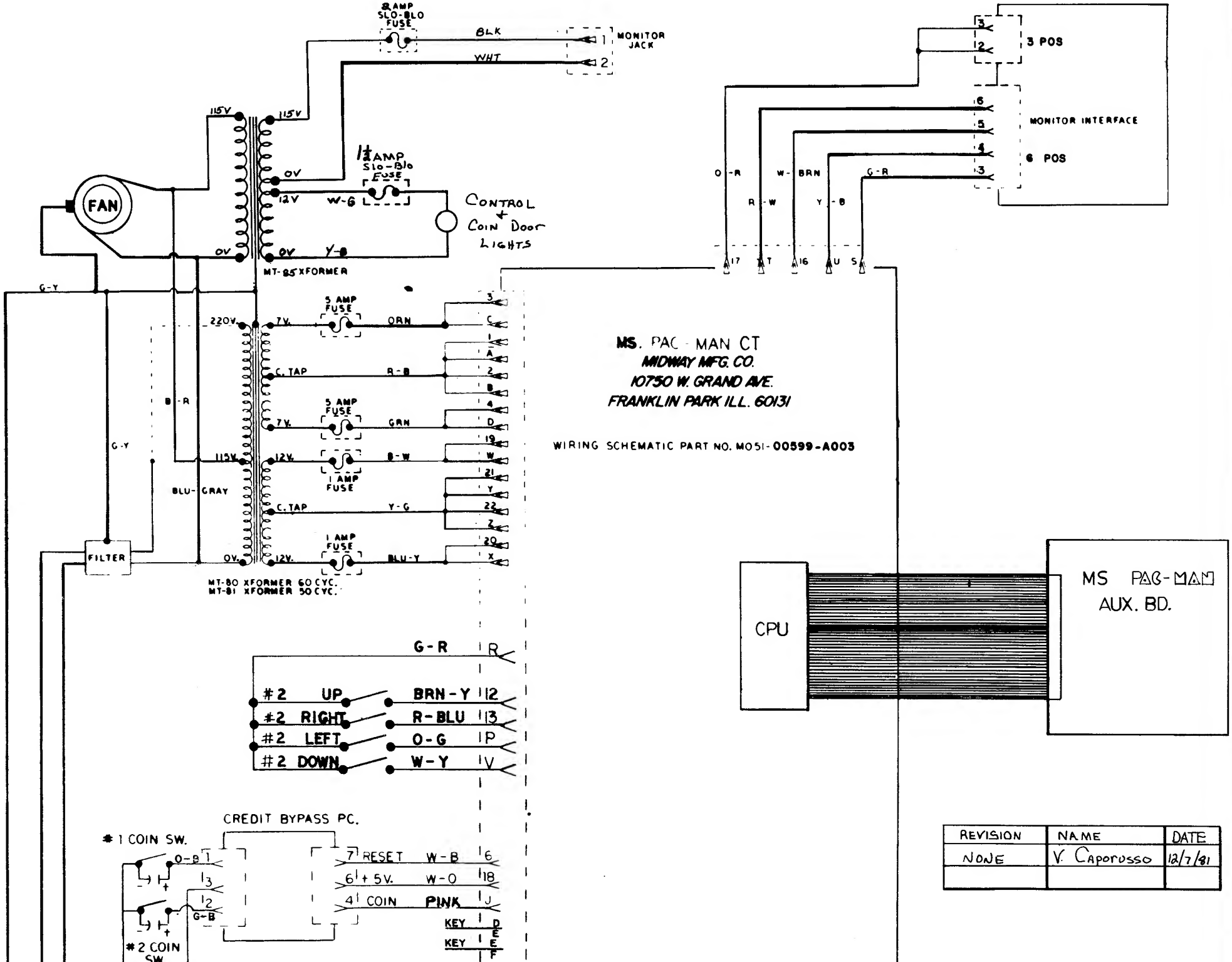


| REVISION | NAME | DATE |
|---|---|---|
| NONE | V. Caporosso | 12/7/81 |
| | | |

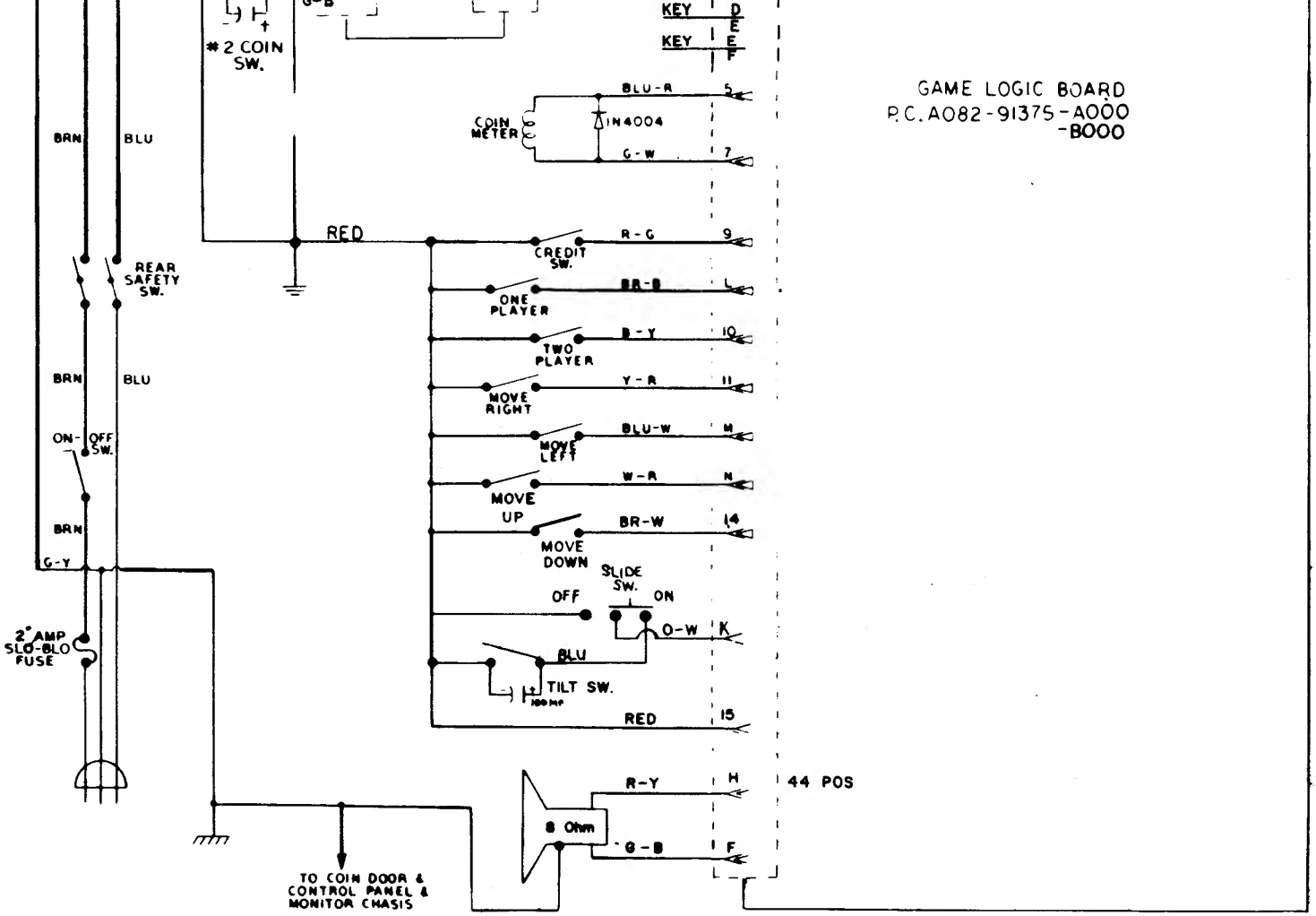
GAME LOGIC BOARD
P.C.A082-91375-A000
-B000
KEY D
KEY E
F
BLU-R 5
COIN METER
IN4004
G-W 7
* 2 COIN SW.
BRN
BLU
RED
REAR SAFETY SW.
R-G 9
CREDIT SW.
ONE PLAYER
BR-B L
TWO PLAYER
B-Y 10
MOVE RIGHT
Y-R 11
MOVE LEFT
BLU-W M
MOVE UP
W-R N
MOVE DOWN
BR-W 14
ON-OFF SW.
G-Y
SLIDE SW.
OFF
ON
O-W K
2 AMP SLO-BLO FUSE
BLU
TILT SW.
RED 15
R-Y H
44 POS
8 Ohm
G-B F
TO COIN DOOR & CONTROL PANEL & MONITOR CHASIS

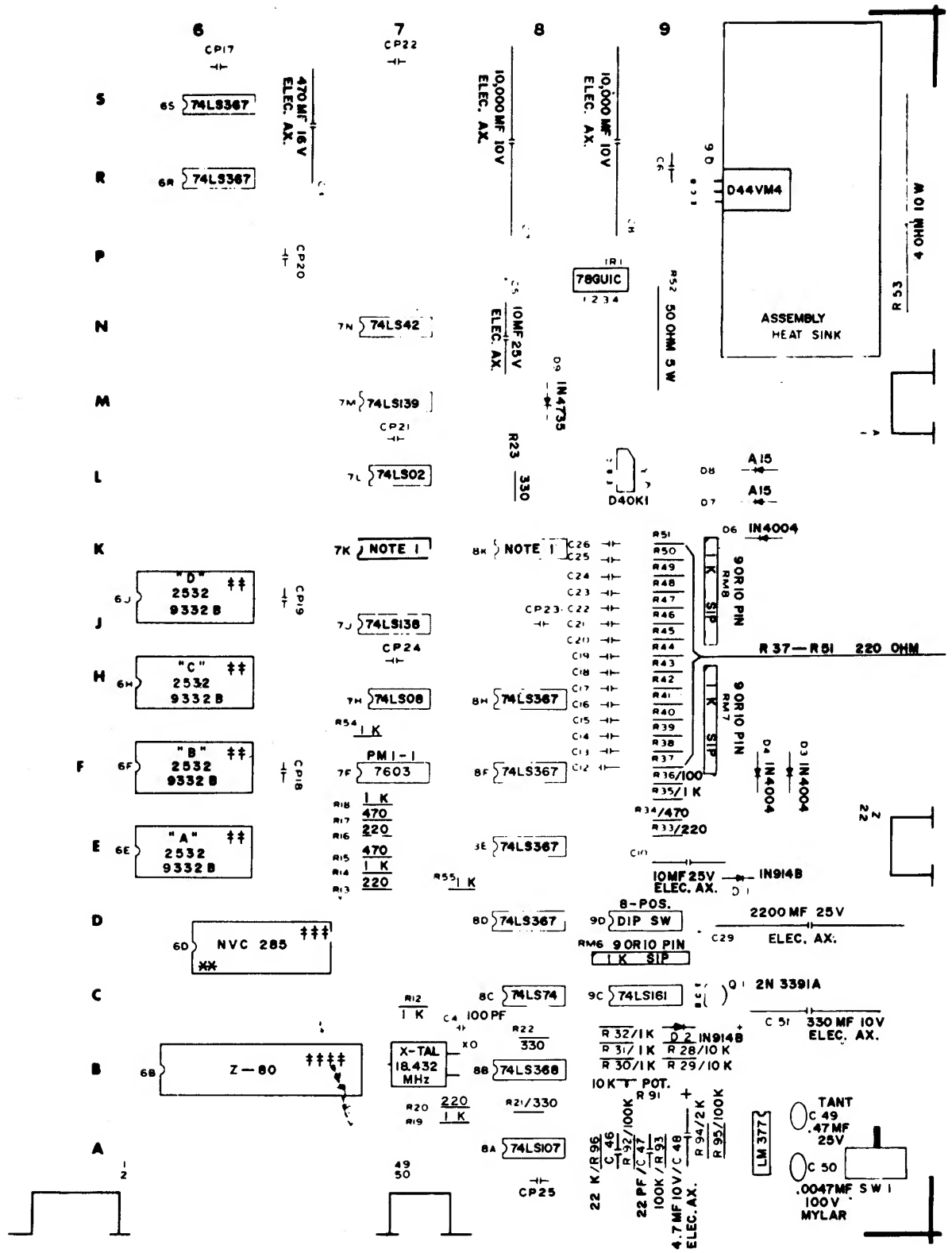


XX NOTE : THIS LOCATION CAN UTLIZE EITHER
(A) CUSTOM CHIP NVC285 OR (B) PLUG IN PC A082-91383-B000 Z-80 SYNC BUSS CONTROLLER (285)

XXX NOTE : THIS LOCATION CAN UTLIZE EITHER
(A) CUSTOM CHIP NVC 284 OR (B) PLUG IN PC A082-91384-B000 V-RAM ADDRESSER (284)

REVISIONS

M051-00932-B026

USED ON PAC-MAN "B"

NO REQ'D 1 PER

**MIDWAY MFG. CO.**
FRANKLIN PK ILL

DO NOT SCALE DWG

HEAT TREAT

SCALE

DIM TOLERANCES UNLESS SPECIFIED
CONCENTRICITY T-R .003
FRACTIONAL 1/64
DECIMAL .005
HOLE DIA +.002 .000

DRN C.L.

CKD

DATE 10/9/80

MAT'L

FINISH

ASSEMBLY DRAWING
PAC—MAN

PART NO.
A082-91375-B000

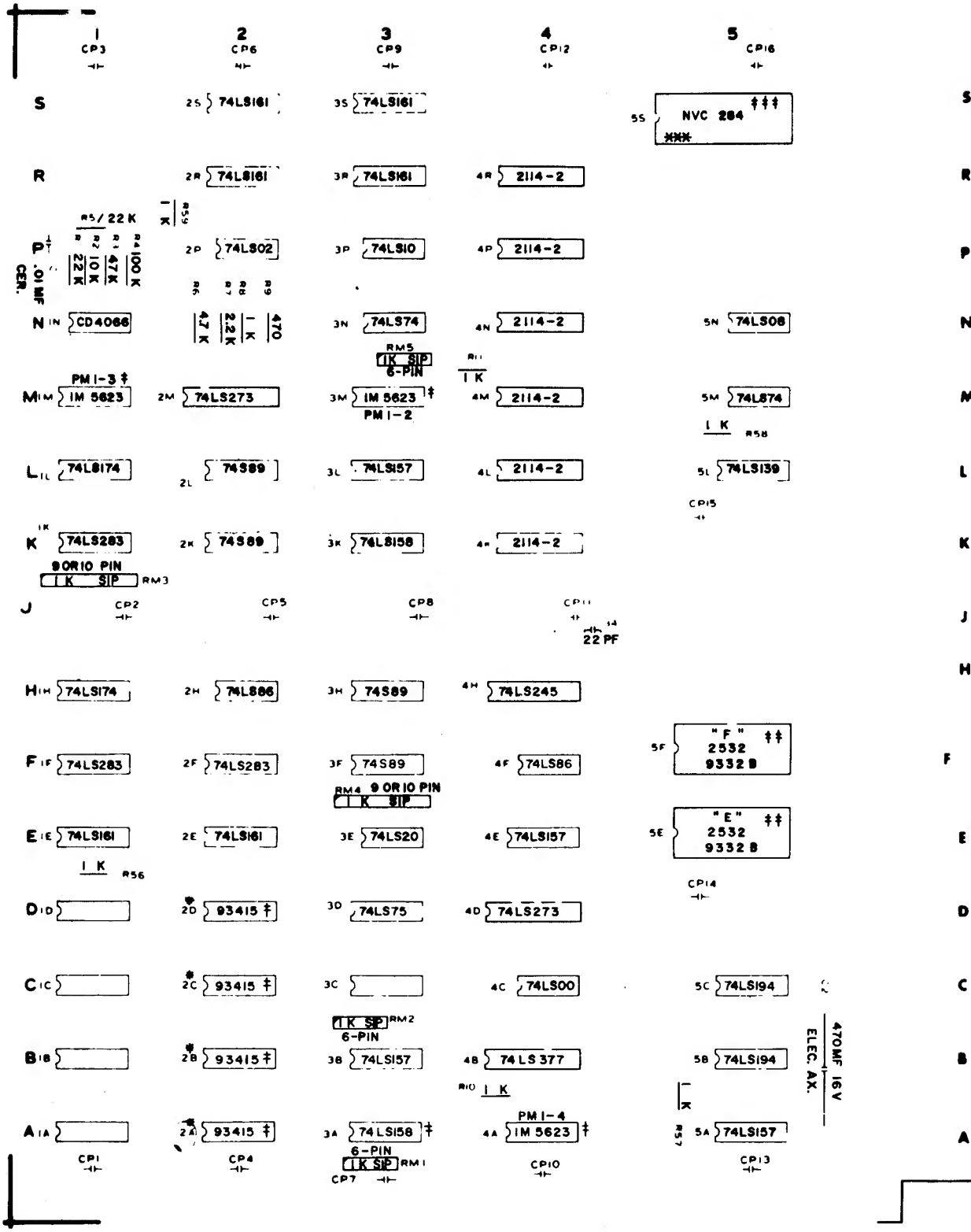


* RAM HEAT SINK ASSEMLY

NOTE 1: PLACE EITHER 74LS259 IN LOC. 8 K
OR CD4099 IN LOC. 7 K

UNMARKED CAPS ARE .1 MF CER. AX.

RESISTOR UNIT = Ohm

‡ — 16 PIN SOCKET ( 9 PER)

‡‡ — 24 PIN SOCKET ( 6 PER)

‡‡‡ — 28 PIN SOCKET ( 2 PER)

‡‡‡‡ — 40 PIN SOCKET ( 1 PER)

XX NOTE : T

XXX NOTE : T

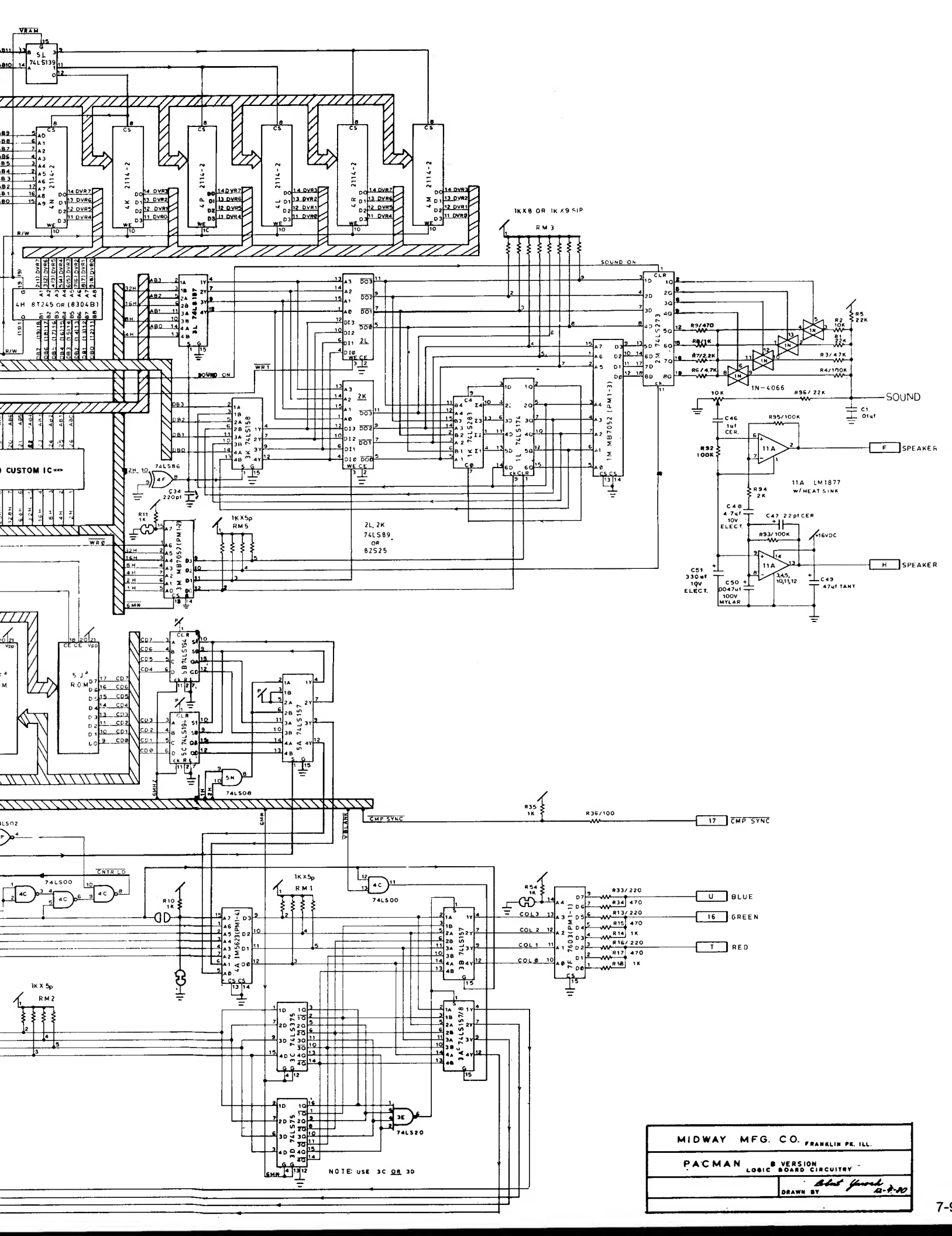
VRAM
5L 74LS139
4N 2114-2
4K 2114-2
4P 2114-2
4L 2114-2
4R 2114-2
4M 2114-2
4H 8T245 OR (8304B)
3L 74LS157
3K 74LS158
2L
2K
1K 74LS283
1L 74LS174
1M MB7052 (PM1-3)
2M 74LS273
1KX8 OR 1KX9 SIP
RM 3
SOUND ON
WRT
CUSTOM IC
74LS86
C34 220pf
R11 1K
1KX5p RM5
2L, 2K 74LS89 OR 82S25
3M MB7052 (PM1-2)
R9/470
R8/1K
R7/2.2K
R6/4.7K
1N-4066
R5 22K
R2 10K
R1 22K
R3/47K
R4/100K
R96/22K
SOUND
C1 .01uf
C46 1uf CER.
R95/100K
R92 100K
11A LM1877 W/HEAT SINK
R94 2K
C48 4.7uf 10V ELECT.
C47 22pf CER
R93/100K
+16VDC
C51 330uf 10V ELECT.
C50 .0047uf 100V MYLAR
C49 .47uf TANT
F SPEAKER
H SPEAKER
5J ROM
5B 74LS194
5C 74LS194
5A 74LS157
5N 74LS08
CMP SYNC
R35 1K
R36/100
17 CMP SYNC
74LS00
CNTR LD
R10 1K
1KX5p RM1
4A 1M5623(PM1-4)
3B 74LS157
3A 74LS157/8
3C 74LS375
3D 74LS75
3E 74LS20
R54 1K
7F 7603(PM1-1)
COL3
COL 2
COL 1
COL 0
R33/220
R34 470
R13/220
R15 470
R14 1K
R16/220
R17 470
R18 1K
U BLUE
16 GREEN
T RED
1KX5p RM2
NOTE: USE 3C OR 3D
MIDWAY MFG. CO. FRANKLIN PK. ILL.
PACMAN B VERSION LOGIC BOARD CIRCUITRY
DRAWN BY
12-7-80

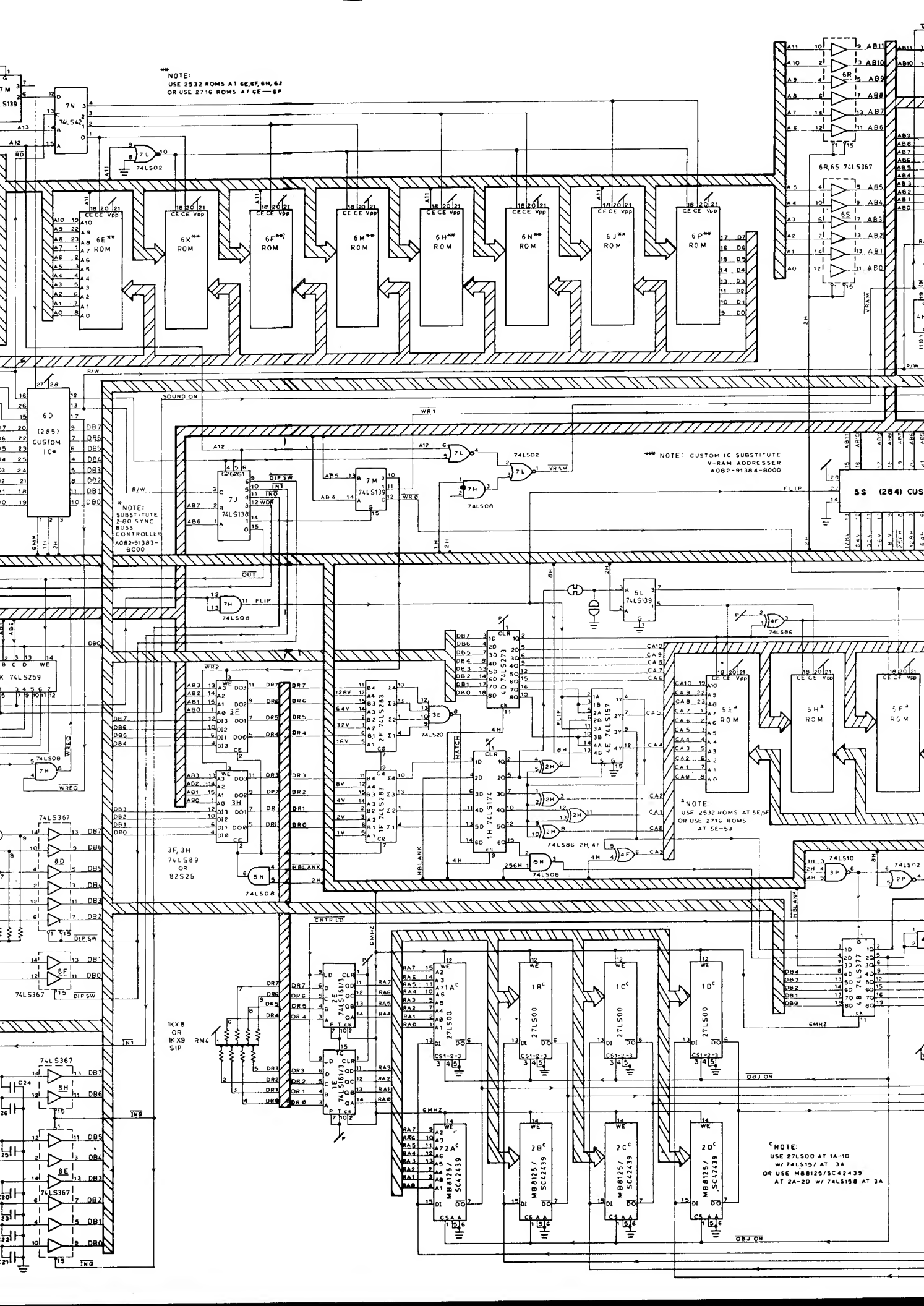

** NOTE:
USE 2532 ROMS AT 6E,6F,6H,6J
OR USE 2716 ROMS AT 6E—6P
6E** ROM
6K** ROM
6F** ROM
6M** ROM
6H** ROM
6N** ROM
6J** ROM
6P** ROM
6R,6S 74LS367
6D (285) CUSTOM IC*
* NOTE:
SUBSTITUTE Z-80 SYNC BUSS CONTROLLER A082-91383-B000
*** NOTE: CUSTOM IC SUBSTITUTE V-RAM ADDRESSER A082-91384-B000
5S (284) CUS
3F, 3H 74LS89 OR 82S25
1KX8 OR 1KX9 SIP
RM4
2F 74LS283
1F 74LS283
4D 74LS273
1H 74LS174
4E 74LS157
5E² ROM
5H² ROM
5F² ROM
² NOTE
USE 2532 ROMS AT 5E,5F
OR USE 2716 ROMS AT 5E-5J
1A^c 27LS00
1B^c 27LS00
1C^c 27LS00
1D^c 27LS00
2A^c MB8125/SC42439
2B^c MB8125/SC42439
2C^c MB8125/SC42439
2D^c MB8125/SC42439
4B 74LS377
^c NOTE:
USE 27LS00 AT 1A-1D
w/ 74LS157 AT 3A
OR USE MB8125/SC42439
AT 2A-2D w/ 74LS158 AT 3A

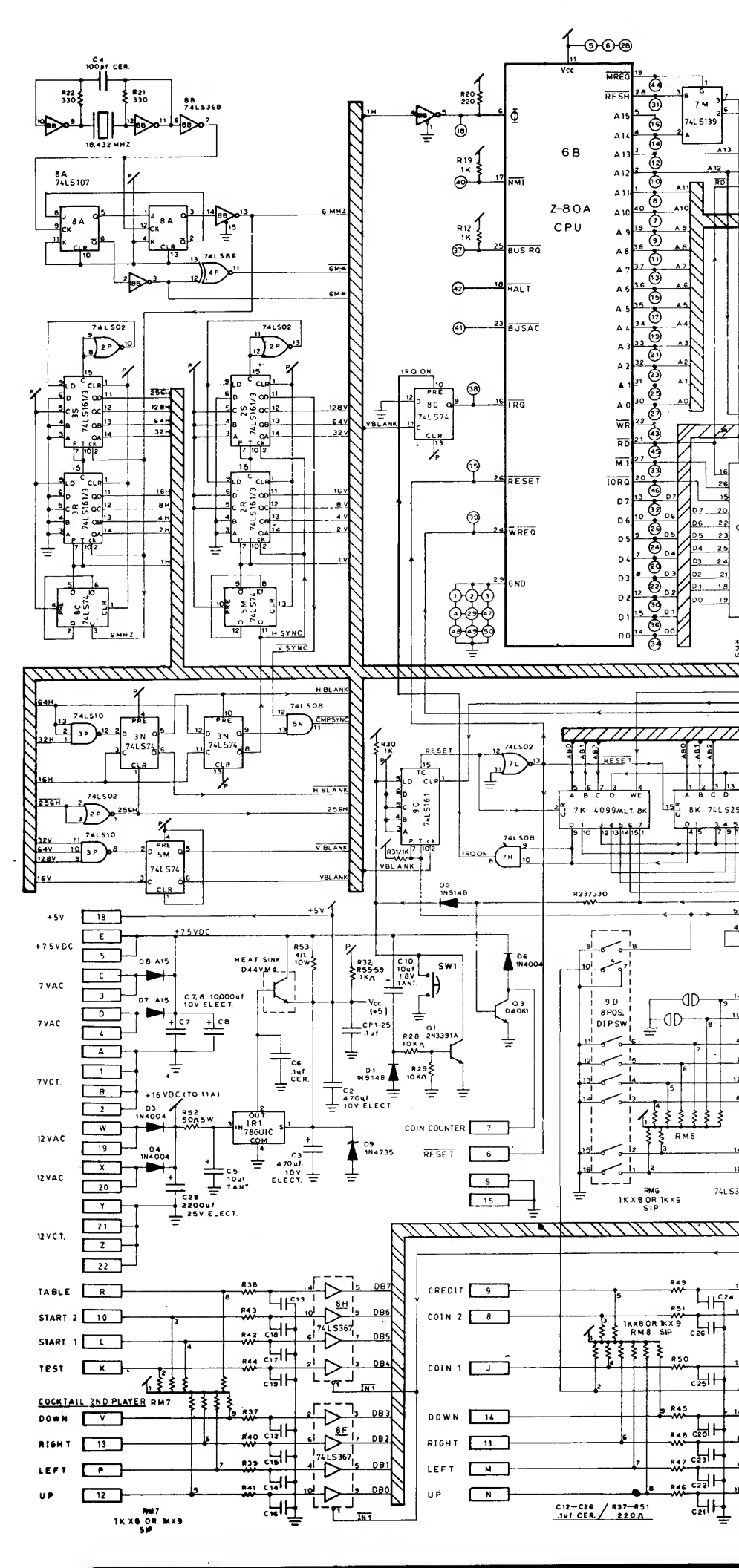

6B
Z-80A
CPU
Vcc
MREQ
RFSH
NMI
BUS RQ
HALT
BUSAC
IRQ
RESET
WREQ
GND
IRQ ON
VBLANK
H SYNC
V SYNC
H BLANK
CMPSYNC
V BLANK
6 MHZ
6M*
18.432 MHZ
C4 100pf CER.
R22 330
R21 330
8B 74LS368
8A 74LS107
74LS86
74LS02
74LS10
74LS08
74LS139
74LS161
74LS74
74LS367
7K 4099/ALT. 8K
8K 74LS25
9C 74LS161
9D 8POS. DIPSW
RM6 1KX8 OR 1KX9 SIP
RM7 1KX8 OR 1KX9 SIP
RM8 1KX8 OR 1KX9 SIP
+5V
+7.5VDC
7VAC
7VCT.
12VAC
12VC.T.
TABLE
START 2
START 1
TEST
COCKTAIL 2ND PLAYER RM7
DOWN
RIGHT
LEFT
UP
CREDIT
COIN 2
COIN 1
COIN COUNTER
HEAT SINK D44VM4
SW1
Q1 2N3391A
Q3 D40K1
D6 1N4004
D9 1N4735
D2 1N914B
D1 1N914B
D3 1N4004
D4 1N4004
D8 A15
D7 A15
C7,8 10,000uf 10V ELECT
C29 2200uf 25V ELECT.
C5 10uf TANT.
C3 470uf 10V ELECT.
C2 470uf 10V ELECT
C6 .1uf CER.
C10 10uf 18V TANT.
R53 4Ω 10W
R32 R55-59 1KΩ
R28 10KΩ
R29 10KΩ
R31/1K
R30 1K
R23/330
R52 50Ω 5W
+16VDC (TO 11A)
C12-C26 .1uf CER. / R37-R51 220Ω

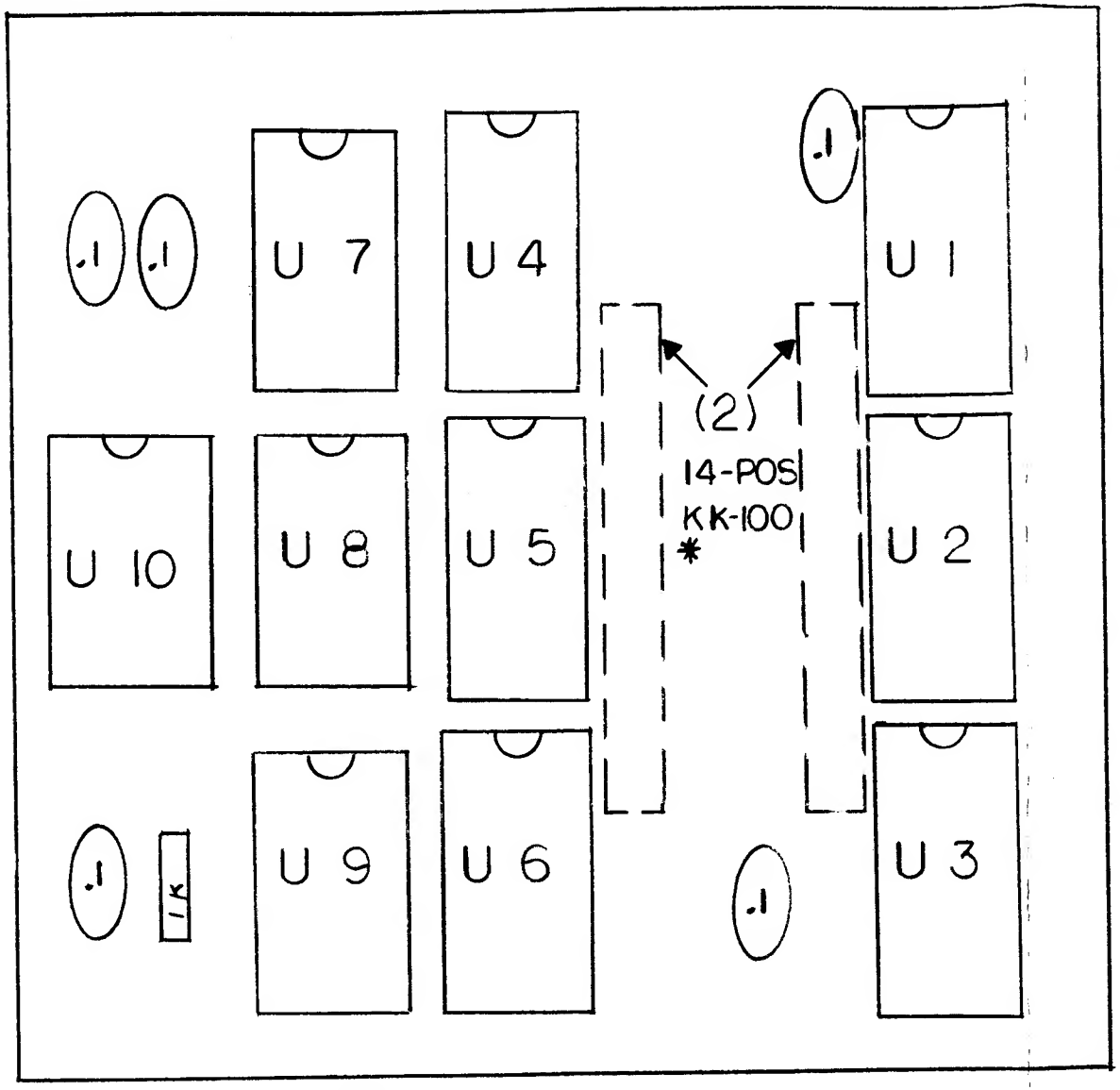


U1, U2, U3, -74LS257
U4, U5, U6, -74LS157
U7, U8, U9, -74LS86
U10 -74LS02
.1 MF 50V - (5)
AX CER
1K ¼w - (1)
(2) - 14 - POS. KK-100
* MOUNTED ON SOLDER SIDE

M051-00932-B034

| REVISIONS | | |
|---|---|---|
| | | |

| | | | | |
|---|---|---|---|---|
| DO NOT SCALE DWG. | HEAT TREAT | SCALE | USED ON PAC-MAN | **MIDWAY MFG. CO.** FRANKLIN PK. ILL. |
| DIM. TOLERANCES UNLESS SPECIFIED<br>CONCENTRICITY T.I.R. .003<br>FRACTIONAL ± 1/64<br>DECIMAL ± .005<br>HOLE DIA. +.002 -.000 | DRN. MM<br>CKD.<br>DATE 10-27-80 | MAT'L.<br>FINISH | NO. REQ'D 1-PER. | V-RAM ADDRESSER (284)<br>COMPONENENT-LAY-OUT |
| | | | | PART NO. A082_91384_B000 |

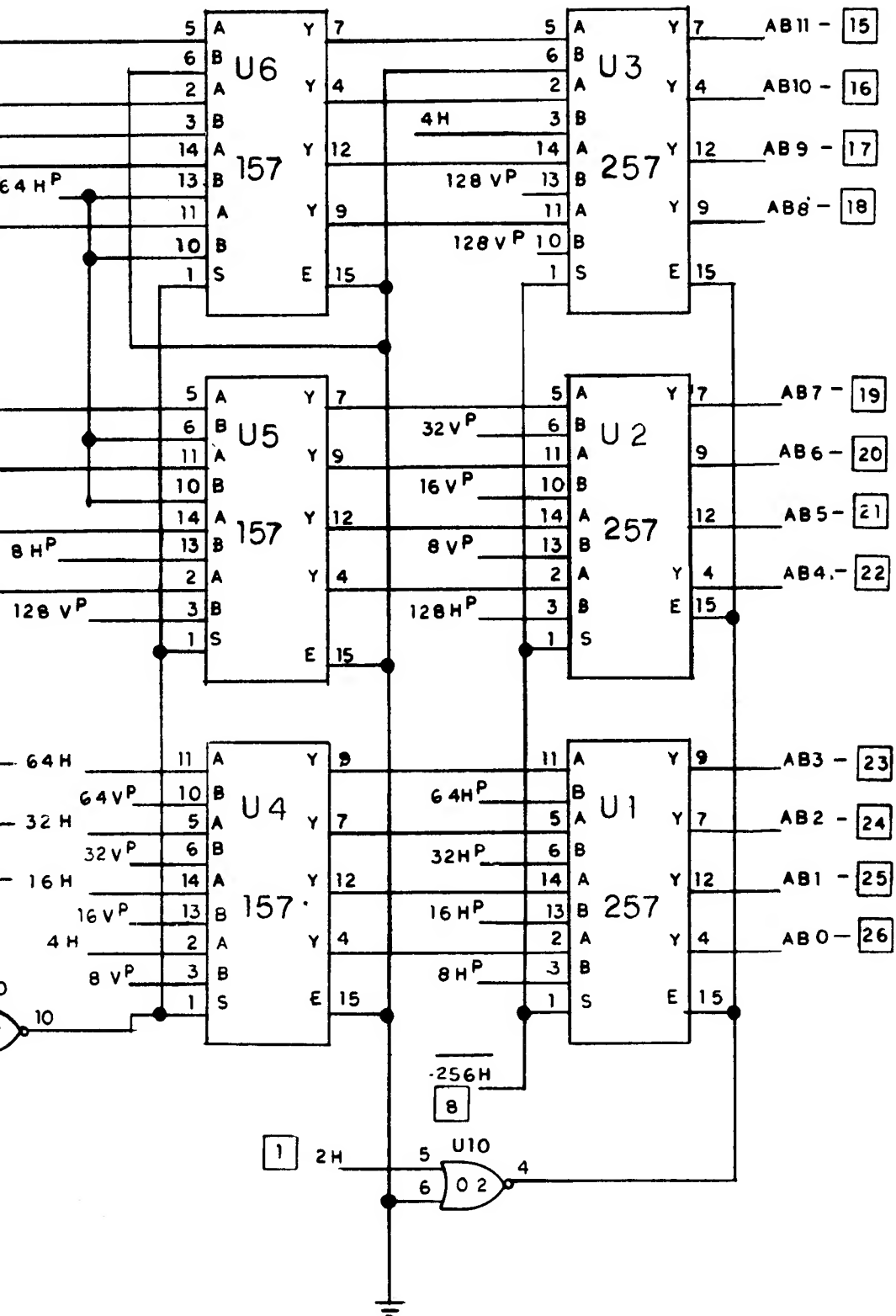


□ = 28 PIN CONNECTOR

P = PULL UP

MIDWAY MFG. CO
FRANKLIN PARK ILL

| | |
|---|---|
| DRN M.M | CKD |
| DATE NOV 25 80 | NO. REQ'D 1 |
| USED ON PAC-MAN | |
| DESC. V RAM ADDRESSER (NVC-284) | |
| PART NO. A082-91384-B000 | |

SCHEMATIC PART NO. M051 00932 B032

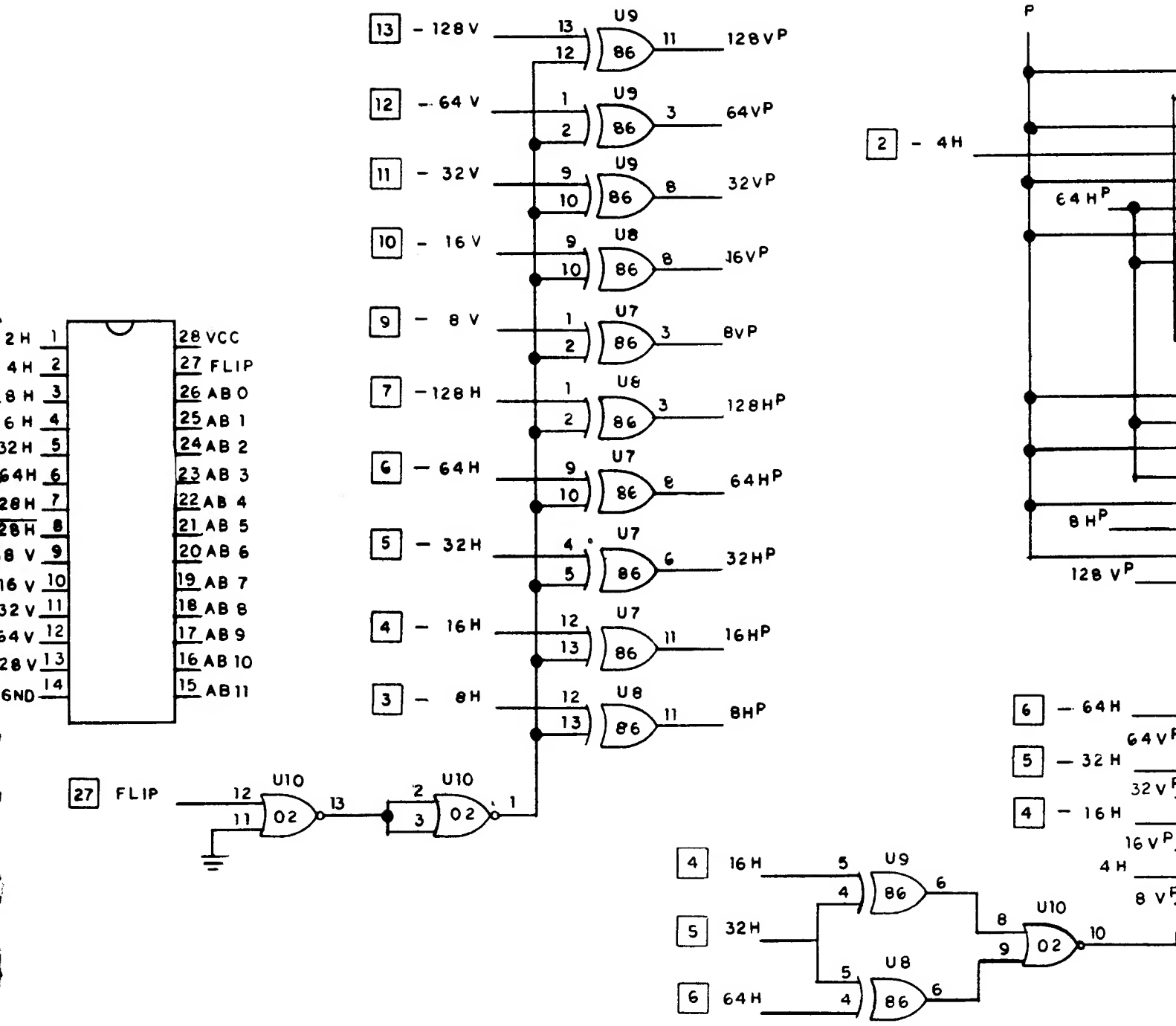
13 - 128 V
12 - 64 V
11 - 32 V
10 - 16 V
9 - 8 V
7 - 128 H
6 - 64 H
5 - 32 H
4 - 16 H
3 - 8 H
U9
U8
U7
U6
U10
86
02
128VP
64VP
32VP
16VP
8VP
128HP
64HP
32HP
16HP
8HP
2 - 4H
64HP
8HP
128VP
27 FLIP
2H 1
4H 2
8H 3
6H 4
32H 5
64H 6
128H 7
128H 8
8V 9
16V 10
32V 11
64V 12
128V 13
GND 14
28 VCC
27 FLIP
26 AB 0
25 AB 1
24 AB 2
23 AB 3
22 AB 4
21 AB 5
20 AB 6
19 AB 7
18 AB 8
17 AB 9
16 AB 10
15 AB 11
4 16H
5 32H
6 64H
6 - 64H
5 - 32 H
4 - 16 H
4H
8VP

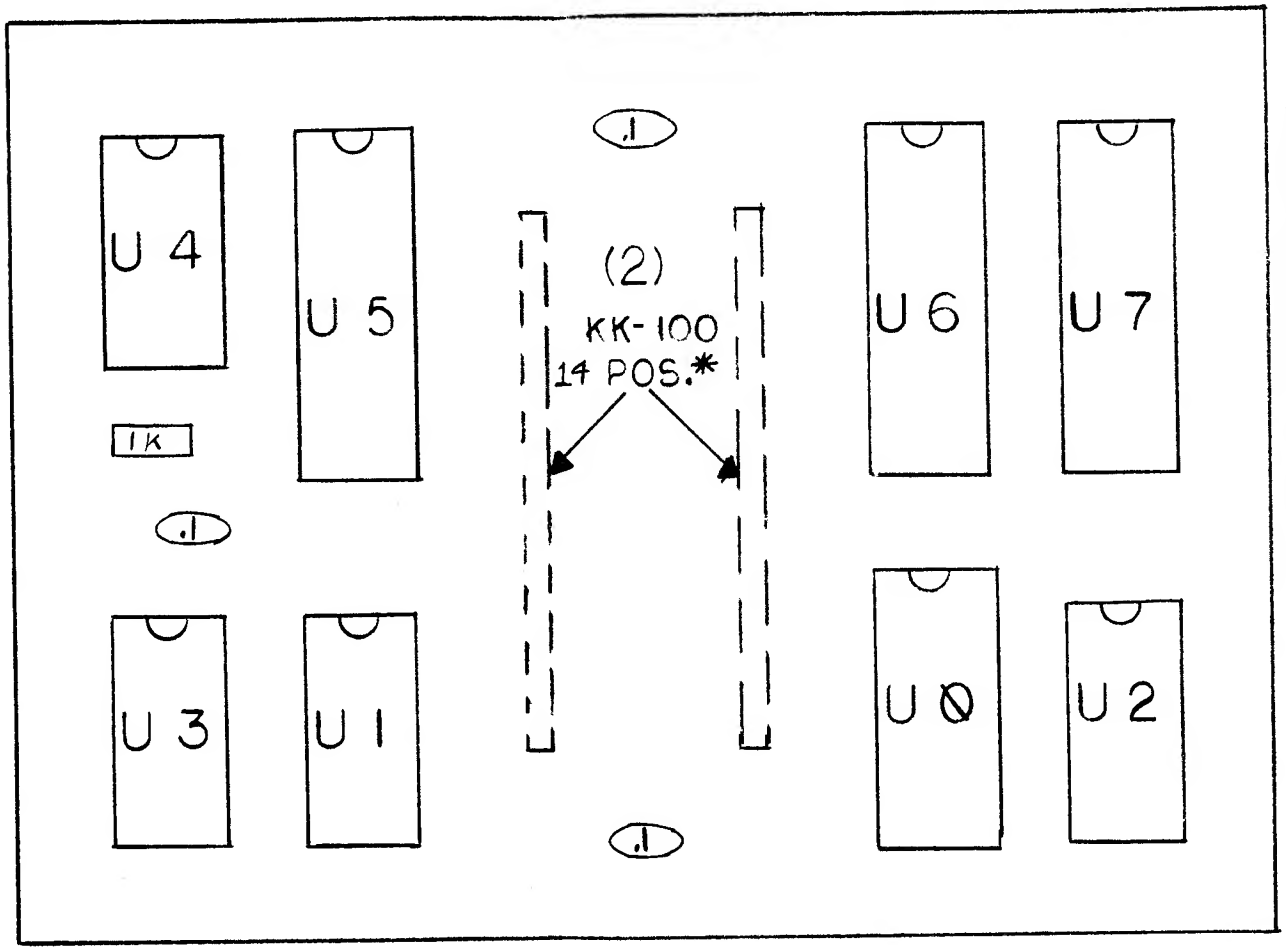


U0 - 74LS139
U1 - 74LS02
U2 - 74LS74
U3 - 74LS02
U4 - 74LS74
U5 - 74LS244
U6 - 74LS374
U7 - 74LS374
(3) - .1 MF 50v AX. CER.
(1) - 1K 1/4 w RESIS.
* MOUNTED ON SOLDER SIDE

M051-00932-B031

| REVISIONS | | |
|---|---|---|
| | | |

USED ON PAC-MAN
NO. REQ'D 1-PER

**MIDWAY MFG. CO.**
FRANKLIN PK. ILL.

DO NOT SCALE DWG.

HEAT TREAT —

SCALE —

DIM. TOLERANCES UNLESS SPECIFIED
CONCENTRICITY T.I.R. .003
FRACTIONAL ± 1/64
DECIMAL ± .005
HOLE DIA + .002 — .000

DRN. M.M
CKD. Y S.
DATE 10-23-80

MAT'L. —

FINISH —

Z-80 SYNC BUSS CONTROLER(285)
COMPONENT LAYOUT

PART NO.
A082-91383-B000

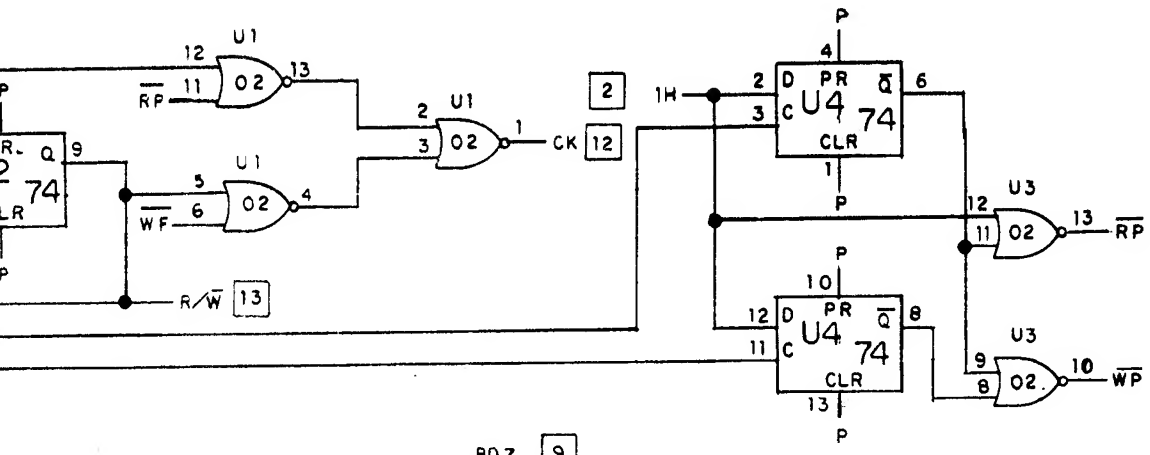


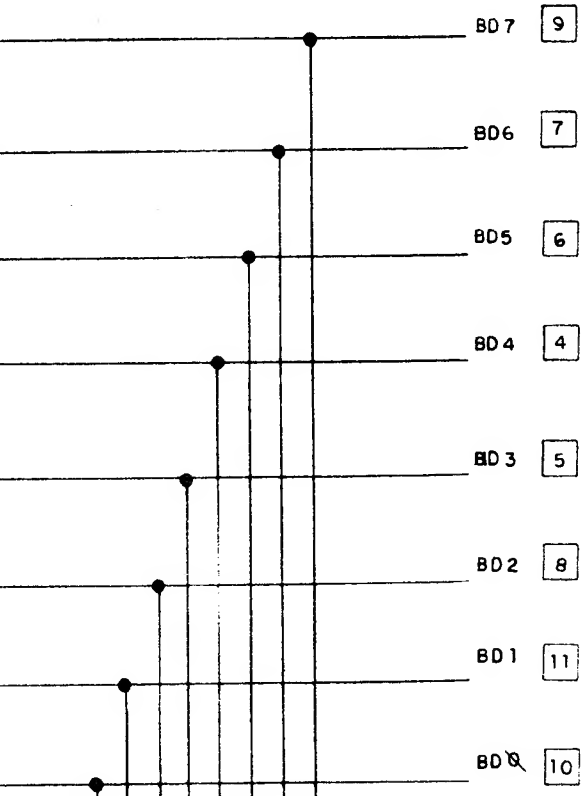


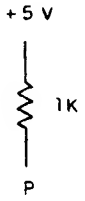


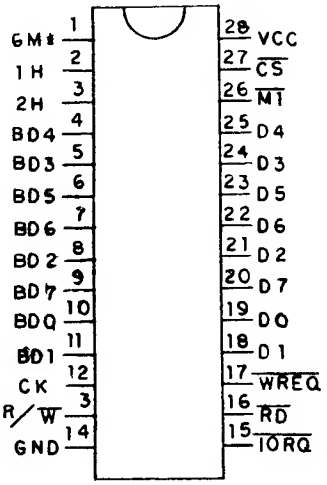


NOTES:

□ = 28 PIN CONNECTOR

P = PULL UP

| MIDWAY MFG, CO. FRANKLIN PARK ILL | |
|---|---|
| DRN. M.M | CKD. |
| DATE. NOV-21-80 | NO. REQ'D 1 |
| USED ON. | |
| DESC. Z 80 SYNC BUS CONTROLER (285) | |
| PART NO. A082-91383-B000 | |

SCHEMATIC PART NO. M051-00932-B030

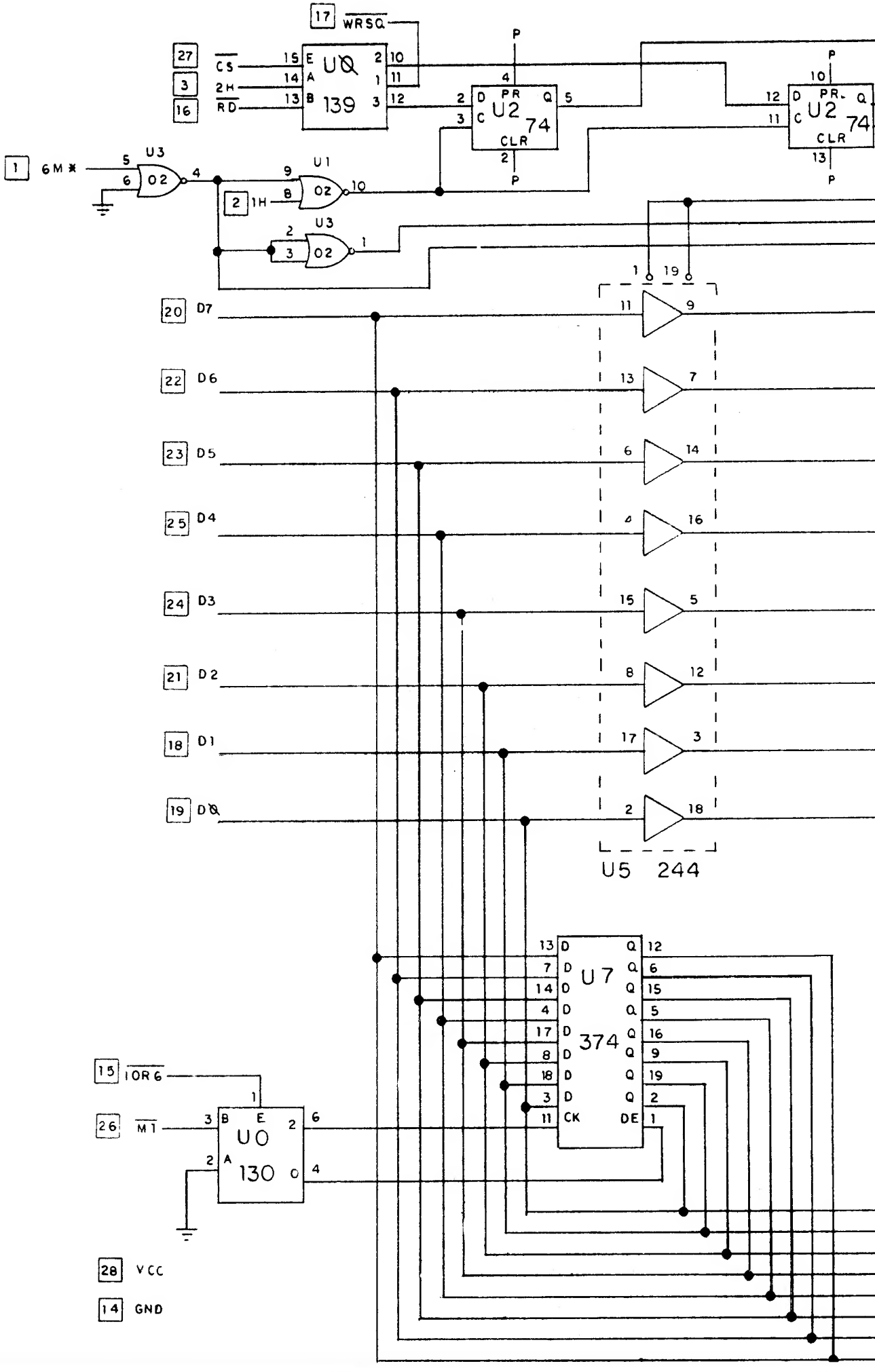
17 WRSQ
27 CS
3 2H
16 RD
U0 139
P
U2 74
CLR
1 6M*
U3 02
U1 02
2 1H
20 D7
22 D6
23 D5
25 D4
24 D3
21 D2
18 D1
19 D0
U5 244
U7 374
15 IORG
26 MI
U0 130
28 VCC
14 GND

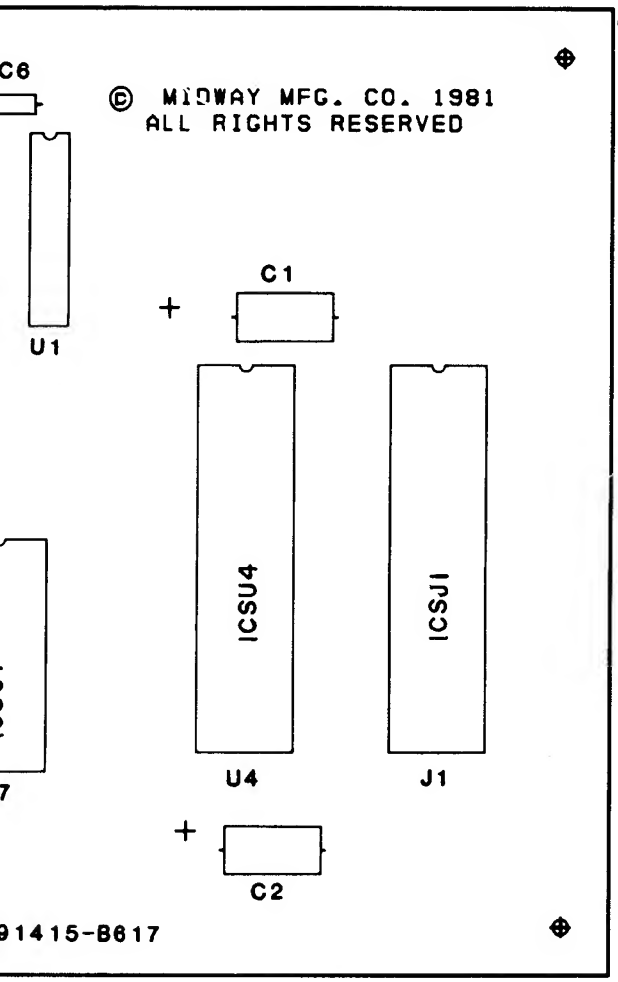


## CROSS REFERENCE LIST

| DESCRIPTION | QUAN. | DESIGNATION | PART NO. |
|---|---|---|---|
| .IMF AX.CER.CAP | 4 | C3-C6 | 0508-00800-0900 |
| IOMF AX. ELEC. | 2 | C1, C2 | 0508-00800-1100 |
| CG820 | 1 | UØ | 0066-014CX-XXQX |
| CG821 | 1 | U1 | 0066-015CX-XXQX |
| CG822 | 1 | U2 | 0066-016CX-XXQX |
| CG823 | 1 | U3 | 0066-017CX-XXQX |
| Z-80A | 1 | U4 | 0932-00807-0000 |
| EPROM 2532 | 1 | U6 | 0595-00803-0200 |
| " " | 1 | U7 | 0595-00803-0300 |
| " 2716 | 1 | U5 | 0595-00803-0100 |
| 20 PIN IC SOCKET | 4 | ICSUØ-ICSU3 | 0508-00804-0100 |
| 24 PIN " " | 3 | ICSU5-ICSU7 | 0508-00804-0500 |
| 40 PIN " " | 2 | ICSU4, ICSJ1 | 0508-00804-1800 |
| CABLE ASS'Y 40-PIN | 1 | J1 | 0595-00804-0200 |
| MS. PAC-MAN AUX. P.C. BOARD | 1 | | A080-91415-B617 |

AL & PROPERTY OF MIDWAY MFG. CO.

**MIDWAY MFG. CO.**
ANKLIN PK., IL. 60131 *A BALLY CO.*

MBLY DRAWING
-MAN AUX P.C.
91415-B617

REVISIONS

PART NO.
M05-1-0061-7-B001

## DESIGNATION LIST

| DESIGNATION | DESCRIPTION |
|---|---|
| C1,C2 | 10 MF ELEC. CAP. |
| C3-C6 | .1MF CER.CAP |
| ICUØ | CG820 |
| " U1 | CG821 |
| " U2 | CG822 |
| " U3 | CG823 |
| " U4 | Z-80A |
| " U5 | EPROM 2716 |
| " U6,U7 | EPROM 2532 |
| ICSUØ-ICSU3 | 20 PIN IC SOCKET |
| " U4 | 40 PIN " " |
| " U5-ICSU7 | 24 PIN " " |
| " J1 | 40 PIN " " |
| J1 | CABLE ASS'Y. 40-PIN |
| PCB | MS.PAC-MAN AUX . P.C.BOARD |

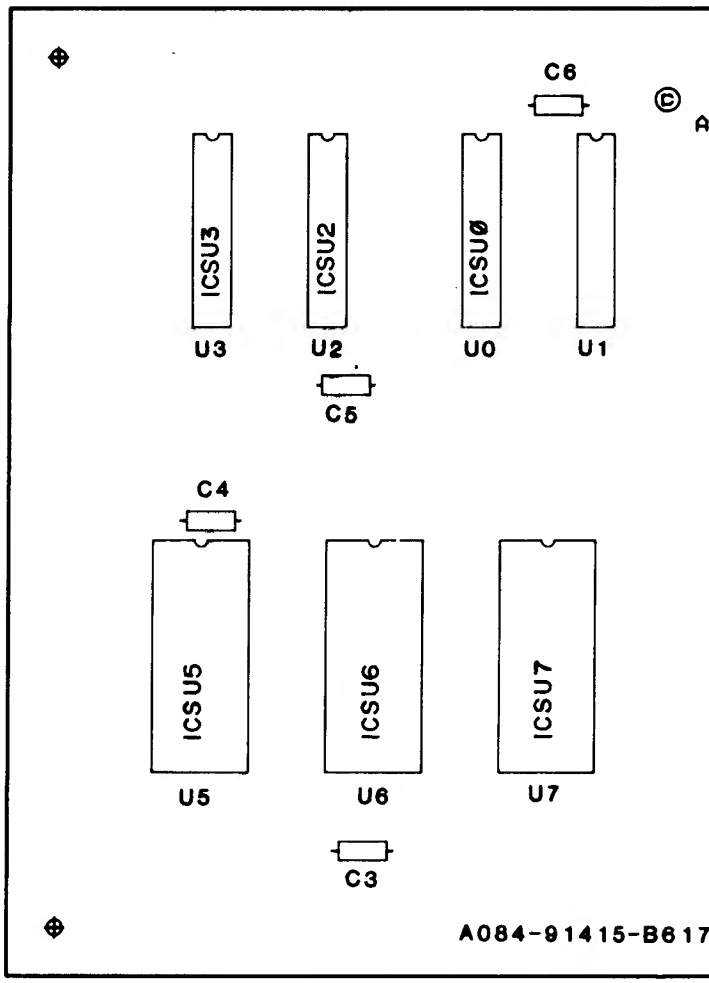


PROJECT ENG : J. SZERSZEN

THIS DWG IS CONFIDENTIAL & PROPERTY

| DIM. TOLERANCES UNLESS OTHERWISE SPEC | | FIRST USED ON: MS. PAC-MAN | | |
|---|---|---|---|---|
| CONCENTRICITY T.I.R. | .002 | DRN: M. M. | DATE: 12/29/81 | SCALE: FULL |
| FRACTIONAL | ± 1/64 | MECH CHK | MATL | |
| DECIMAL | ± 005 | | | |
| HOLE DIA | + 002 - 000 | ELEC CHK | FINISH | |
| ANGLE | ± 1/2° | | | |
| DO NOT SCALE DWG | | | | |

MIDWAY
FRANKLIN PK., IL.

ASSEMBLY DRAWIN
MS. PAC-MAN AUX P
A084-91415-B617

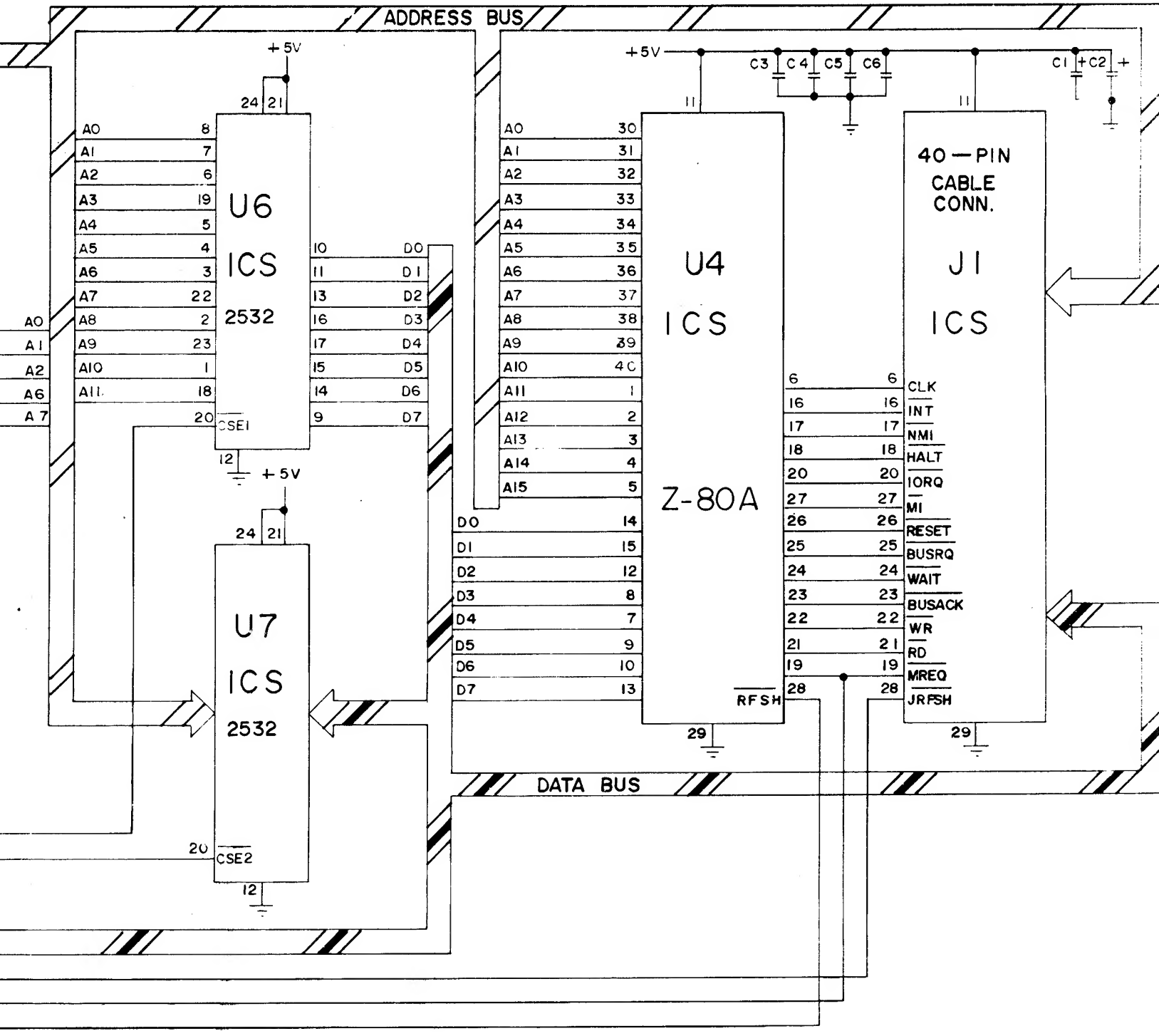


NOTE:

C1,C2 - 10MF ELEC. CAP
C3-C6 - 1MF CER CAP

ZERSZEN

THIS DWG. IS CONFIDENTIAL & PROPERTY OF MIDWAY MFG. CO.

MS. PAC—MAN

1/4/81 FULL

MIDWAY MFG. CO.
FRANKLIN PK. IL 60131

MS. PAC—MAN P.C.
A084-91415-8617
SCHEMATIC

REVISIONS
M051 00617 B002

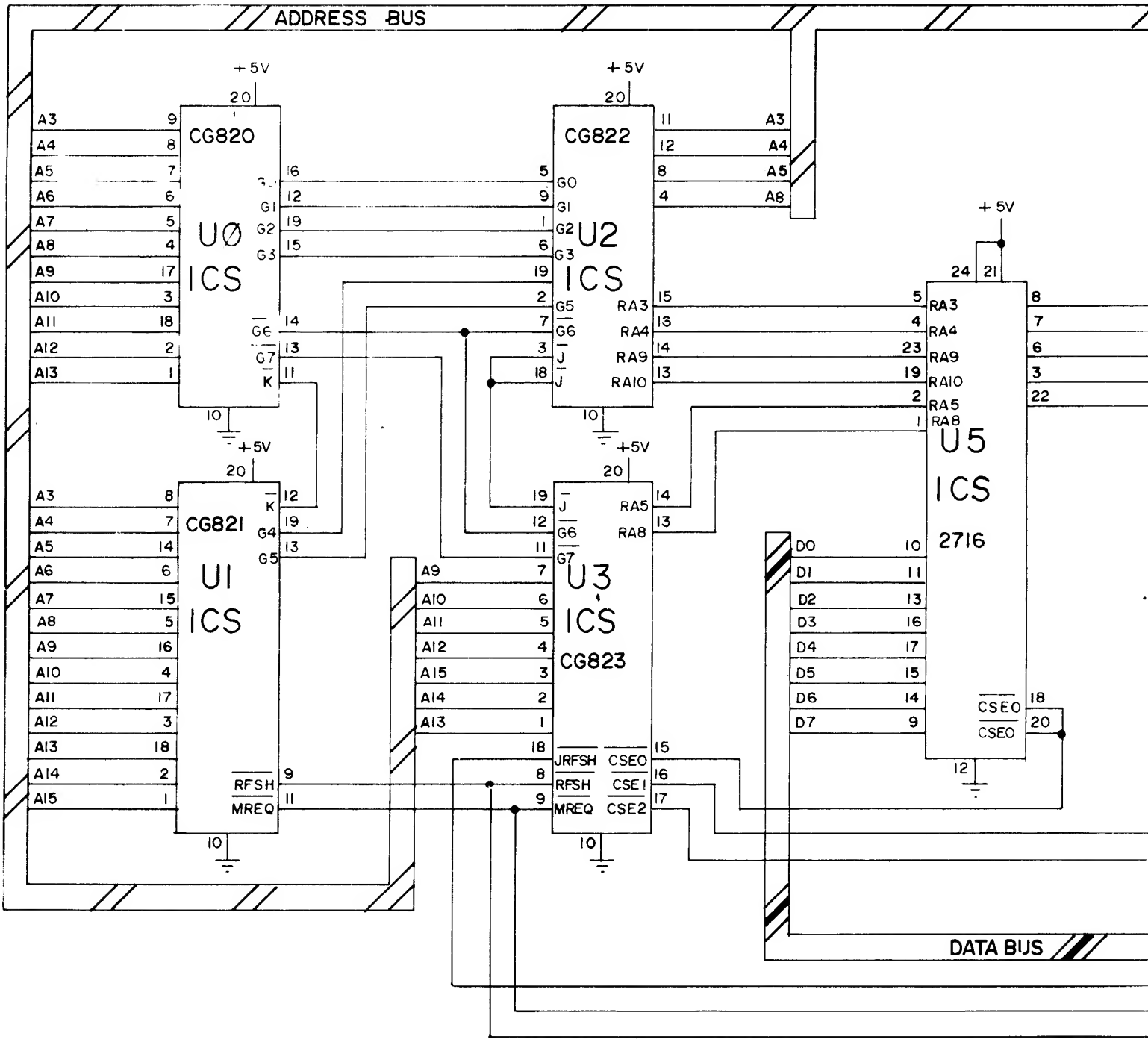


PROJECT ENG: J. SZE

DIM TOLERANCES
UNLESS OTHERWISE SPEC
CONCENTRICITY
FRACTIONAL
DECIMAL
ANGULAR
DO NOT SCALE DWG

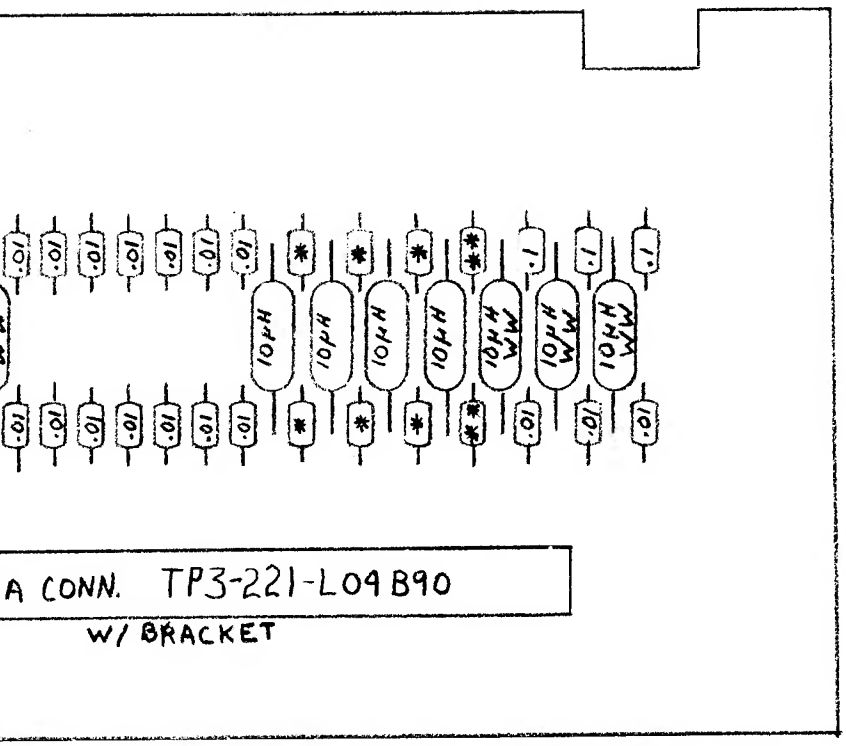


A CONN. TP3-221-L09B90
W/ BRACKET

* 100 Pf
** 470 Pf

| | | | | |
|---|---|---|---|---|
| | | | REVISIONS | |
| | HEAT TREAT | SCALE FULL | USED ON PAC-MAN<br>NO. REQ'D 1 PER | **MIDWAY MFG. CO.**<br>FRANKLIN PK. ILL. |
| K | MAT'L. | ASSMB. DRWG<br>PAC-MAN FILTER P.C | | PART NO. A082-91389-D000 |
| 2-11-81 | FINISH | | | |

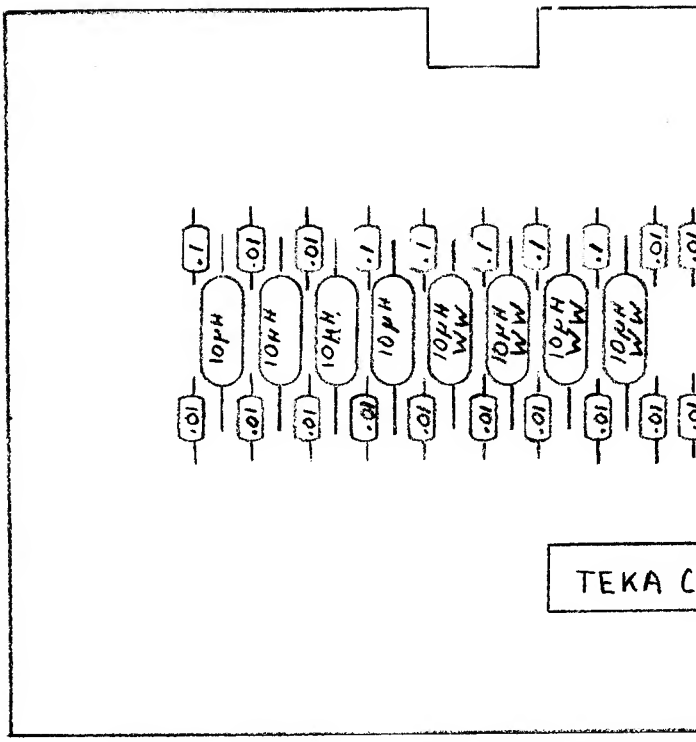


M051-00932-D037

| DO NOT SCALE DWG. | |
|---|---|
| DIM. TOLERANCES UNLESS SPECIFIED<br>CONCENTRICITY T.I.R. .003<br>FRACTIONAL ± 1/64<br>DECIMAL ± .005<br>HOLE DIA. +.002 −.000 | DRN. TJK |
| | CKD. |
| | DATE 02-1 |

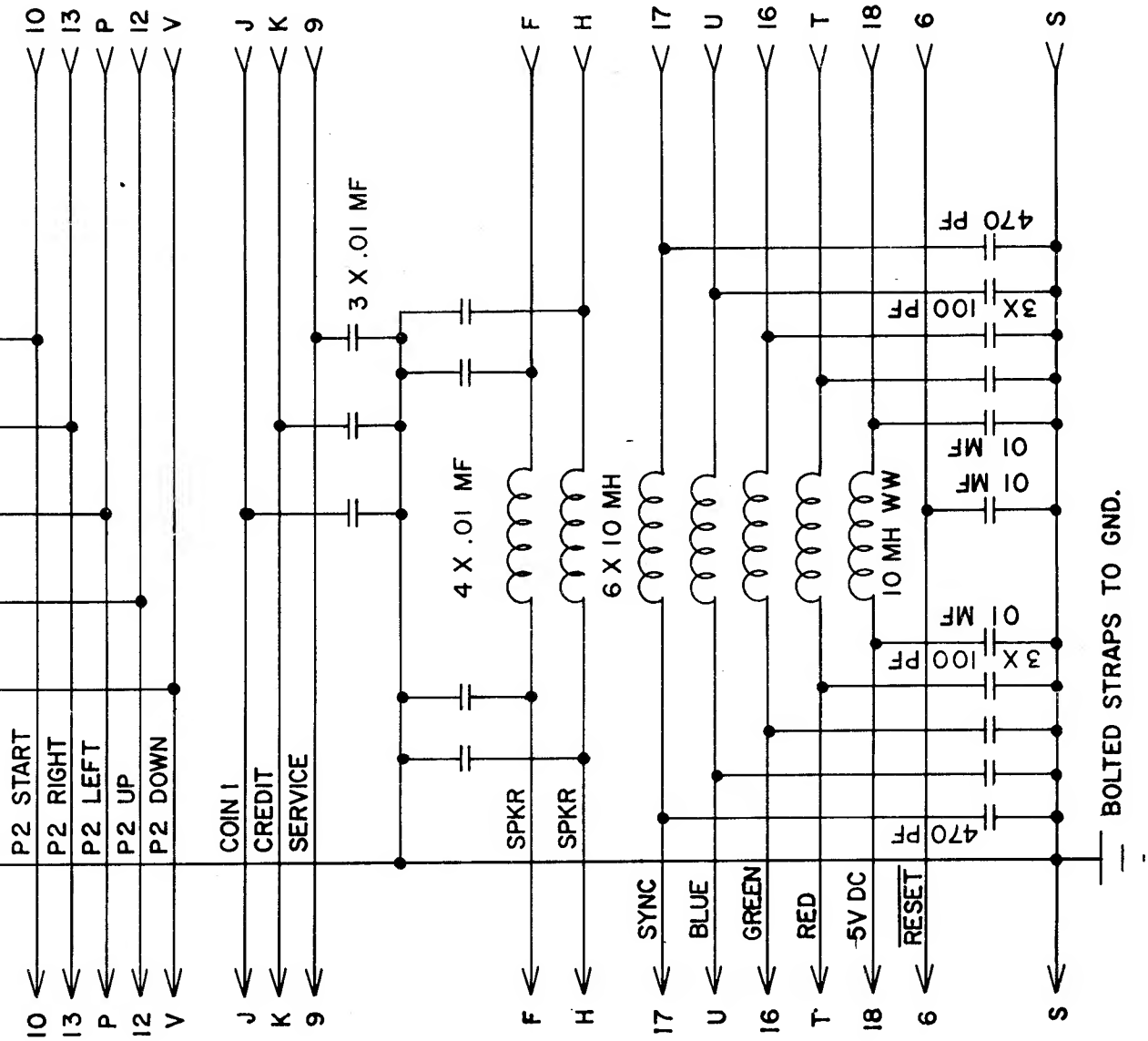


| | | | |
|---|---|---|---|
| | | REVISIONS | |
| | USED ON PAC-MAN | **MIDWAY MFG. CO.** FRANKLIN PK ILL | |
| HEAT TREAT | SCALE | NO REQ'D 1 PER | |
| MATL | SCHEMATIC DIAGRAM PAC-MAN FILTER P.C. | PART NO A082-91389-D000 | |
| FINISH | | | |

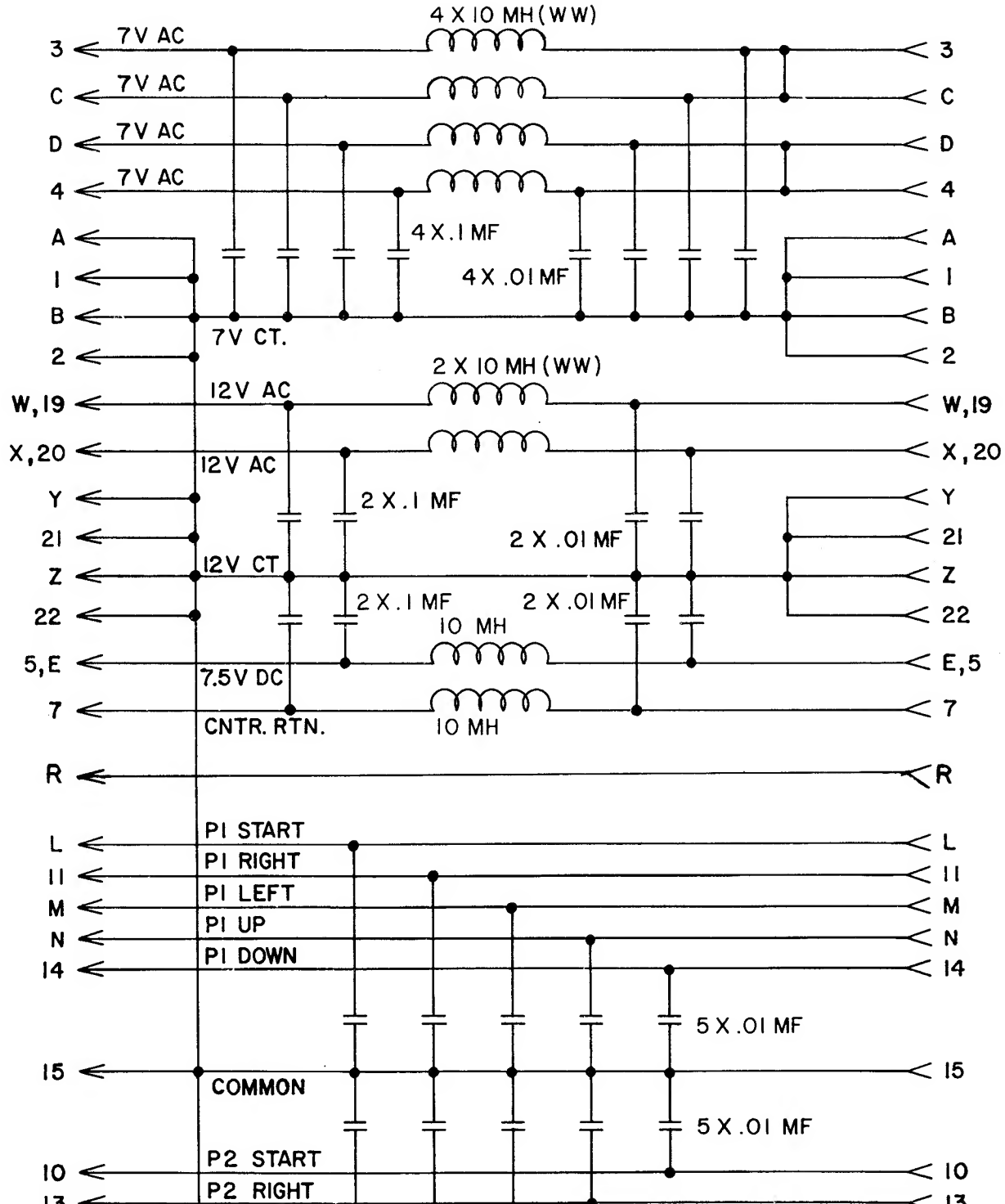


M051-00932-D038

DO NOT SCALE DWG

DIM TOLERANCES UNLESS SPECIFIED

DRN

DATE 02-11-81

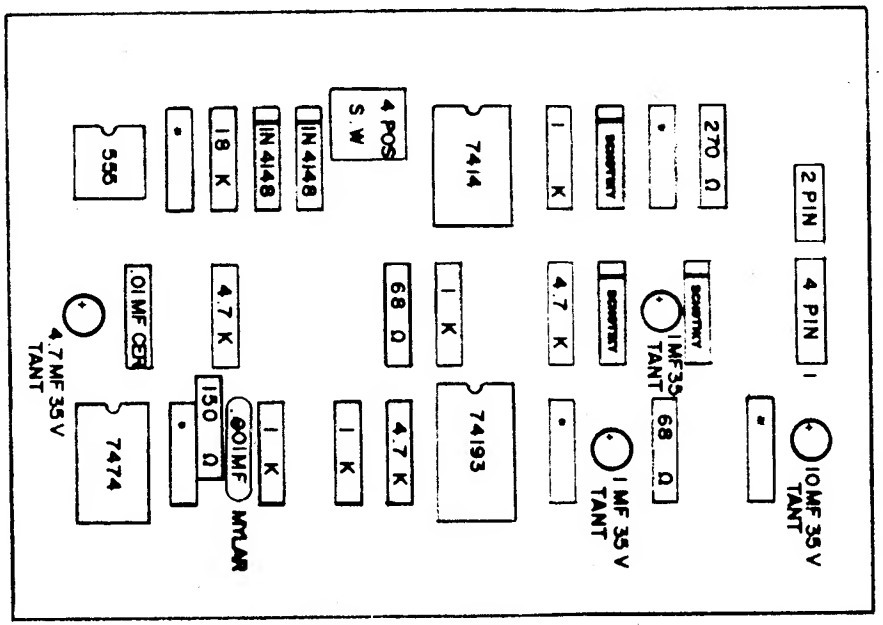


* 1 MF 50 V. CER. AX.

SCHOTIKY DIODE – IN5818 OR IN5817

M051-00932-A027

| | | | | |
|---|---|---|---|---|
| REVISIONS | | | | |
| USED ON PAC-MAN | MIDWAY MFG. CO. FRANKLIN PK ILL | | | |
| NO REQ'D | | | | |
| DO NOT SCALE DWG | HEAT TREAT | SCALE | | |
| DIM TOLERANCES UNLESS SPECIFIED<br>CONCENTRICITY T I R .003<br>FRACTIONAL ± 1/64<br>DECIMAL .005<br>HOLE DIA + .002 .000 | DRN CR<br>CKD<br>DATE 10/22/80 | MAT'L<br>FINISH | ASSEMBLY DRAWING<br>CREDIT MULTIPLIER P.C | PART NO. A082-91348-C000 |

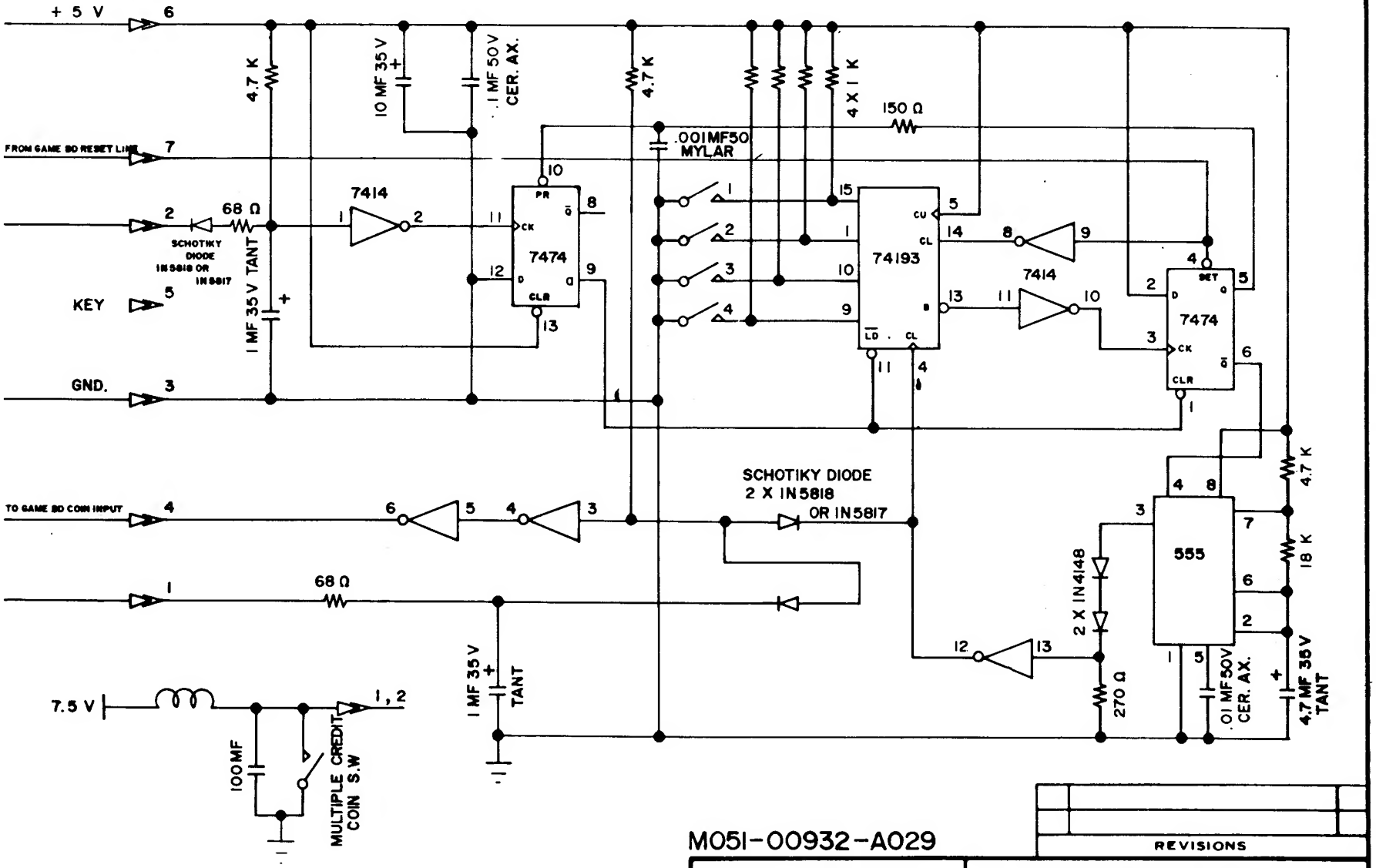


M051-00932-A029

REVISIONS

| | | | |
|---|---|---|---|
| DO NOT SCALE DWG. | HEAT TREAT | SCALE | USED ON PAC-MAN |
| DIM TOLERANCES UNLESS SPECIFIED<br>CONCENTRICITY T I R .003<br>FRACTIONAL ± 1/64<br>DECIMAL ± .005<br>HOLE DIA + .002 - .000 | DRN<br>CKD<br>DATE 10/23/80 | MAT'L<br>FINISH | NO REQ'D |

**MIDWAY MFG. CO.**
FRANKLIN PK. ILL

SCHEMATIC DIAGRAM
CREDIT MULTIPLIER

PART NO. A082 - 91348 - C000