Commodore Super-Pet

Technical Manual

Model SP9000



commodore COMPUTER

P/N 990436

These documents are for repair service information only. Part numbers are for reference only. Only parts on current dealer parts list are available. No license is given for any use by possession of these documents and may not be reproduced in any form without the written approval of Commodore Electronics Limited.

REVISIONS				
LTR	ZONE	DESCRIPTION	DATE	APPROVED
1		INFORMATION RELEASE	9/2/81	[illegible]
2		REV PER ECO 2272	9/23/81	[illegible]
2		REV PER ECO 2304	10/7/81	[illegible]
3		REV PER ECO 2341	[illegible]	[illegible]
4		REV PER ECO 2881	2/4/83	[illegible]

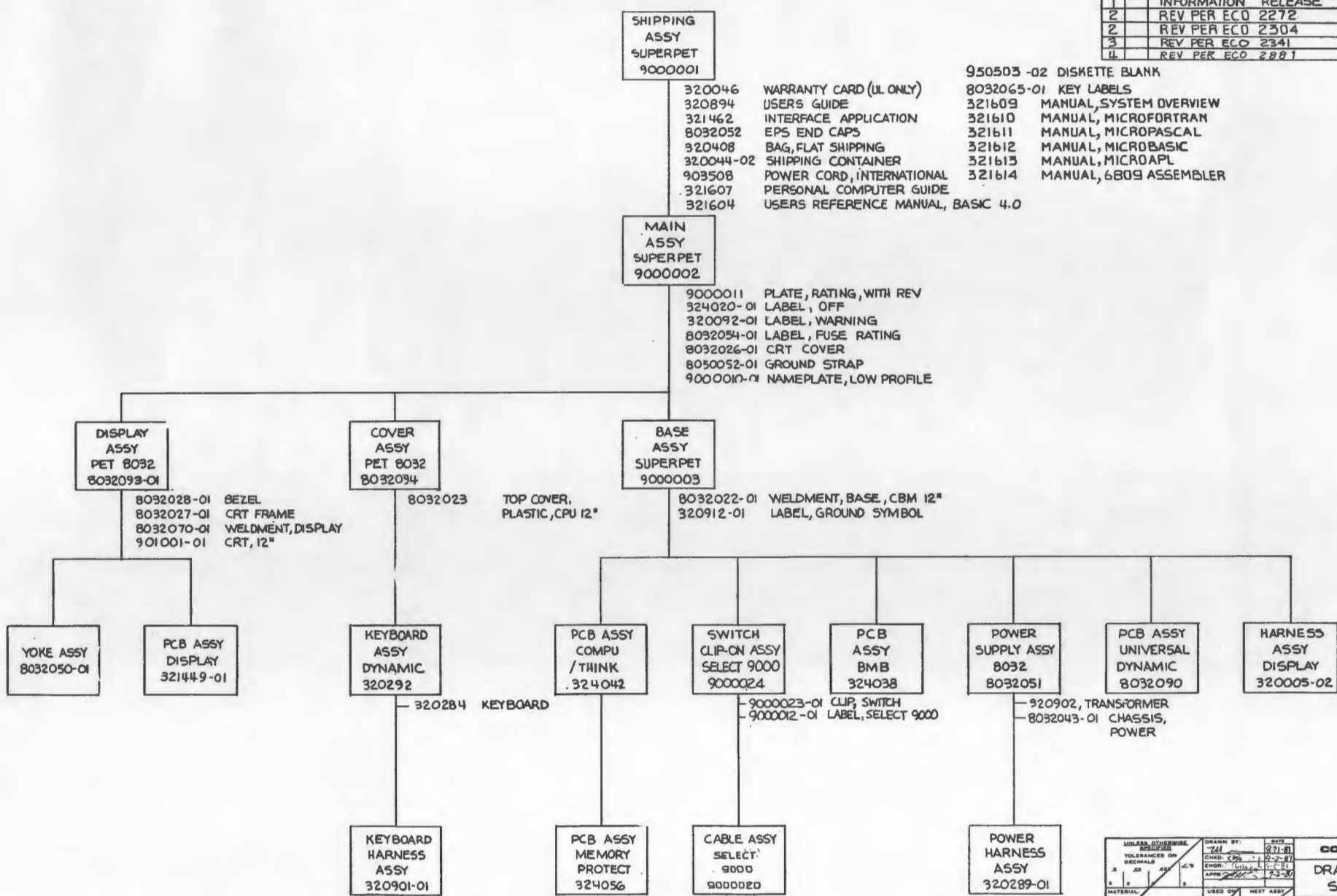

UNLESS OTHERWISE SPECIFIED TOLERANCES ON DECIMALS .X .XX .XXX ∠'S

MATERIAL:

FINISH:

DRAWN BY: [illegible] DATE 8-21-81

CHKD: [illegible] 9-2-81

ENGR: [illegible] 9-2-81

APPR: [illegible] 9-2-81

USED ON | NEXT ASSY

commodore

DRAWING TREE SUPERPET

SIZE D | 9000025 | REV 4

SCALE NONE | SHEET | OF

ADVANCED REPRO

PART NO.	DESCRIPTION
324038-01	PCB ASSY-BMB 60 HZ

REVISIONS				
LTR	ZONE	DESCRIPTION	DATE	APPROVED
A		PRODUCTION RELEASE	8/26/81	
A		PER ECO 2263	9/21/81	
A		REV PER ECO 2248	9/24/81	
B		REV PER ECO 2310 & 2324	10/13/81	
C		REV PER ECO 2377	11/24/81	
D		REV PER ECO 2458	1/19/82	

6 ROMS CAN BE REPLACED WITH A PROGRAMED 2516 EPROM.

5 ROMS CAN BE REPLACED WITH A PROGRAMED 2532 EPROMS.

4 REQUIRED WITH REV A ARTWORK ONLY.

3 SOLDER JUMPER TO XTAL & PCB

2, IDENTIFY WITH APPLICABLE DASH NO. AND REV LETTER.

1. SHEET 4 OF 4 SIZE C
ASSY DWG

NOTES: UNLESS OTHERWISE SPECIFIED:

commodore	TITLE: PCB ASSY-BMB	DRAWN BY:	DATE	ENGR:		SIZE	DRAWING NUMBER
		CHKD: RL	8-26-81	APPR:	8-31-81	B	324038
			8-26-81		9/24/81		SHEET 1 OF 5

QUANTITY REQD PER PART / DASH NO. :01	ITEM	DS	PART NUMBER	DESCRIPTION	REF DES	BEND	NOTES
1	1	B/C	324036-01	PCB FABRICATION-BMB			
REF	2	D	324037-01	SCHEMATIC DIAGRAM-BMB			
	3						
1	4	B	901893-01	IC, 6809E, CPU	U4		
1	5	B	901435-01	, 6502, CPU	U3		
1	6	B	901521-01	, 74LS00, QUAD NAND	U8		
1	7	B	901521-02	, 74LS04, HEX INVERTER	U13		
1	8	B	901521-03	, 74LS08, QUAD AND	U5		
1	9	B	901525-05	, 74S08, QUAD AND	U6		
1	10	B	901521-04	, 74LS20, DUAL 4-INPUT NAND	U16		
1	11	B	901521-53	, 74LS30, 8-INPUT NAND	U15		
2	12	B	901521-49	, 74LS123, DUAL ONE-SHOT	U2,7		
3	13	B	901521-16	, 74LS138, 3 TO 8 DECODER	U11,12,14		
2	14	B	901521-42	, 74LS273, OCTAL D F-F	U9,10		
1	15	B	901894-01	, 4049B, CMOS INVERTER	U1		USE FAIRCHILD PRODUCT ONLY
1	16	B	901524-06	, 1488, LINE DRIVER	U24		
1	17	B	901524-07	, 1489, RECEIVER	U25		
1	18	B	901895-01	IC, 6551, ACIA	U23		
	19						
1	20	B	901550-38	RESISTOR, CARBON 1/4W 5% 510Ω	R4		
3	21	B	901550-01	1K	R5,6,9		
1	22	B	901550-69	1.5K	R3		
1	23	B	901550-96	7.5K	R1		
1	24	B	901550-20	10K	R2		
2	25	B	901550-16	RESISTOR, CARBON 1/4W 5% 150K	R7,8		
	26						
1	27	B	900010-48	CAP, CERAMIC 50V/100pF	C2		
1	28	B	900010-49	, CERAMIC 50V/200pF	C1		
2	29	B	900010-50	, CERAMIC 50V/560pF	C3,4		
8	30	B	900010-38	, CERAMIC 50V/.01μF	C5,8,12,14,15,16,18,19,22		
4	31	B	900402-16	, TANTALUM 35V/2.2μF	C6,20,23,24		
3	32	B	900101-46	CAP, ELECTROLYTIC 25V/2200μF	C9,10,11		
	33						
	34						
	35						
	36						
	37						

commodore

TITLE: PCB ASSY-BMB

DRWN BY: Master	DATE 8-20-81
CHKD: R W	8-26-81
ENGR:	DATE 8-24-81
APPR:	8-24-81

SIZE B | 324038 | REV D | SHT 2/5

QUANTITY REQD PER PART/DASH NO. -01	ITEM	DS	PART NUMBER	DESCRIPTION	REF DES	BEND	NOTES
3	38	B	901527-02	VOLTAGE REGULATOR, +5	VR1,2,3		
1	39	B	902727-01	TRANSISTOR, PNP, TIP 30	Q2		
2	40	B	902847-03	TRANSISTOR, NPN, 2N2222	Q1,3		
4	41	B	900753-01	DIODE, IN5402	CR1,2,3,4		
	42						
	43						
	44						
1	45	B	903316-03	HEADER ASSY, .156 CENTERS	J6		3 PIN
1	46	B	903331-07	HEADER ASSY, .100 CENTERS	J4		7 PIN, REMOVE PIN 2
2	47	B	903316-09	HEADER ASSY, .156 CENTERS	J5A, J5B		9 PIN, REMOVE PIN 7
1	48	B	903345-20	HEADER ASSY, DUAL ROW .100 CENTERS	J8		40 PIN
2	49	B	903345-25	HEADER ASSY, DUAL ROW .100 CENTERS	J1&2		50 PIN
1	50	B	903266-01	CONNECTOR, RIGHT ANGLE,	J3		RS-232
1	51	B	903335-05	HEADER	J9		
	52						
	53						
	54						
1	55	B	900555-02	CRYSTAL, 1.84320 MHZ	Y1		
2	56	B	902910-01	HEATSINK, TO-220	XVR1,2		
	57						
	58						
	59						
8	60	B	904150-01	IC SOCKET, 14 PIN	XU5,6,8,13,15,16,24,25		
6	61	B	904150-02	16 PIN	XU1,2,7,11,12,14		
2	62	B	904149-04	20 PIN	XU9,10		
6	63	B	904150-04	24 PIN	XU17-22		
1	64	B	904150-05	28 PIN	XU23		
2	65	B	904150-06	IC SOCKET, 40 PIN	XU3,4		
	66						
	67						
	68						
	69						
	70						
	71						
	72						
	73						
2	74		906403-19	RIVET, OPEN			

commodore

TITLE: PCB ASSY-BMB

DRWN BY: [illegible] DATE 8-20-81

CHKD: RC DATE 8-26-81

ENGR: [illegible] DATE 8-26-81

APPR: [illegible] DATE 8-26-81

SIZE B | 324038 | REV D | SHT 3/5

QUANTITY REQD PER PART / DASH NO. 01	ITEM	DS	PART NUMBER	DESCRIPTION	REF DES	BEND	NOTES
2	75		907401-02	WASHER, SHOULDER #4			
2	76	B	906610-03	SCREW, PHLPS 6-32X.375			
2	77	B	905970-04	KEP-NUT #6-32			
	78						
1	79		320086-02	BUSS, WIRE			SEE NOTE 4
1	80		903780-11	KYNAR WIRE 30 AWG			SEE NOTE 4
	81						
AR	82		904907-01	THERMAL COMPOUND			
	83						
	84						
	85						
	86						
1	87	B	901898-01	I.C. ROM 2332	U17		SEE NOTE 5
1	88	B	-02		U18		
1	89	B	-03		U19		
1	90	B	-04		U20		
1	91	B	901898-05	I.C. ROM 2332	U22		SEE NOTE 5
1	92	B	901897-01	I.C. ROM 2316	U21		SEE NOTE 6
-	93						
	94						
	95						
	96						
	97						
	98						
	99						
	100						

commodore

TITLE: PCB ASSY - BMB

DRAWN BY: [illegible] DATE: 10-13-81
CHKD:
ENGR: DATE:
APPR:
SIZE: B
324038
REV: D
SHT: 4/5

REVISIONS				
LTR	ZONE	DESCRIPTION	DATE	APPROVED
		SEE SHEET 1		

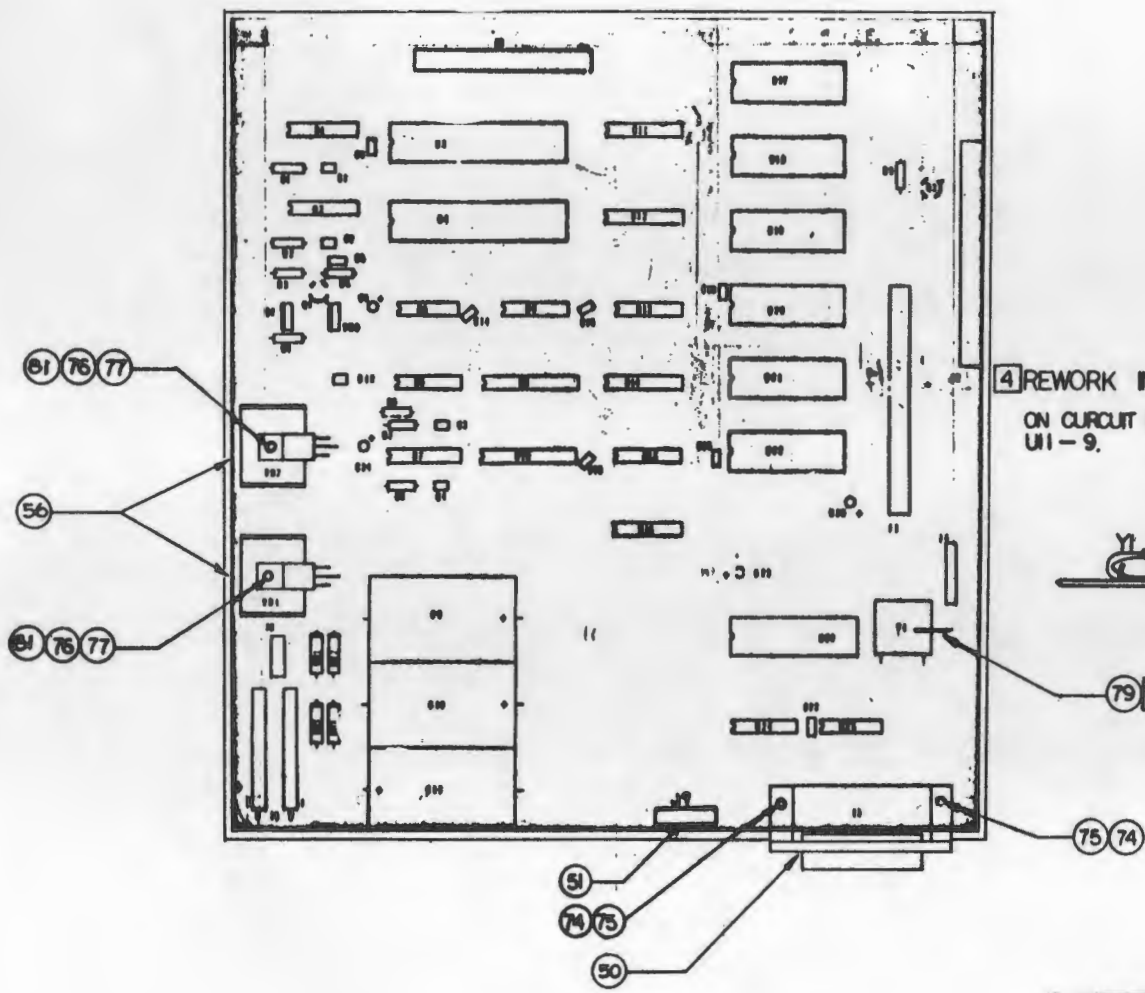

4 REWORK INSTRUCTIONS:

ON CURCUIT SIDE OF BOARD, ADD JUMPER FROM J1-30 TO U11-9.



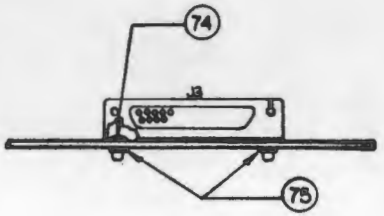

UNLESS OTHERWISE SPECIFIED TOLERANCES ON: DECIMALS .X .XX .XXX ∠	DRAWN BY:	DATE 9-16-81	commodore
	CHKD:	9-16-81	PCB ASSEMBLY BMB BOARD
	ENGR:		
	APPR:		
MATERIAL:	USED ON SP 9000	NEXT ASSY 9000002	SIZE C 324038 REV D
FINISH:			SCALE 1/1 SHEET 5 OF 5

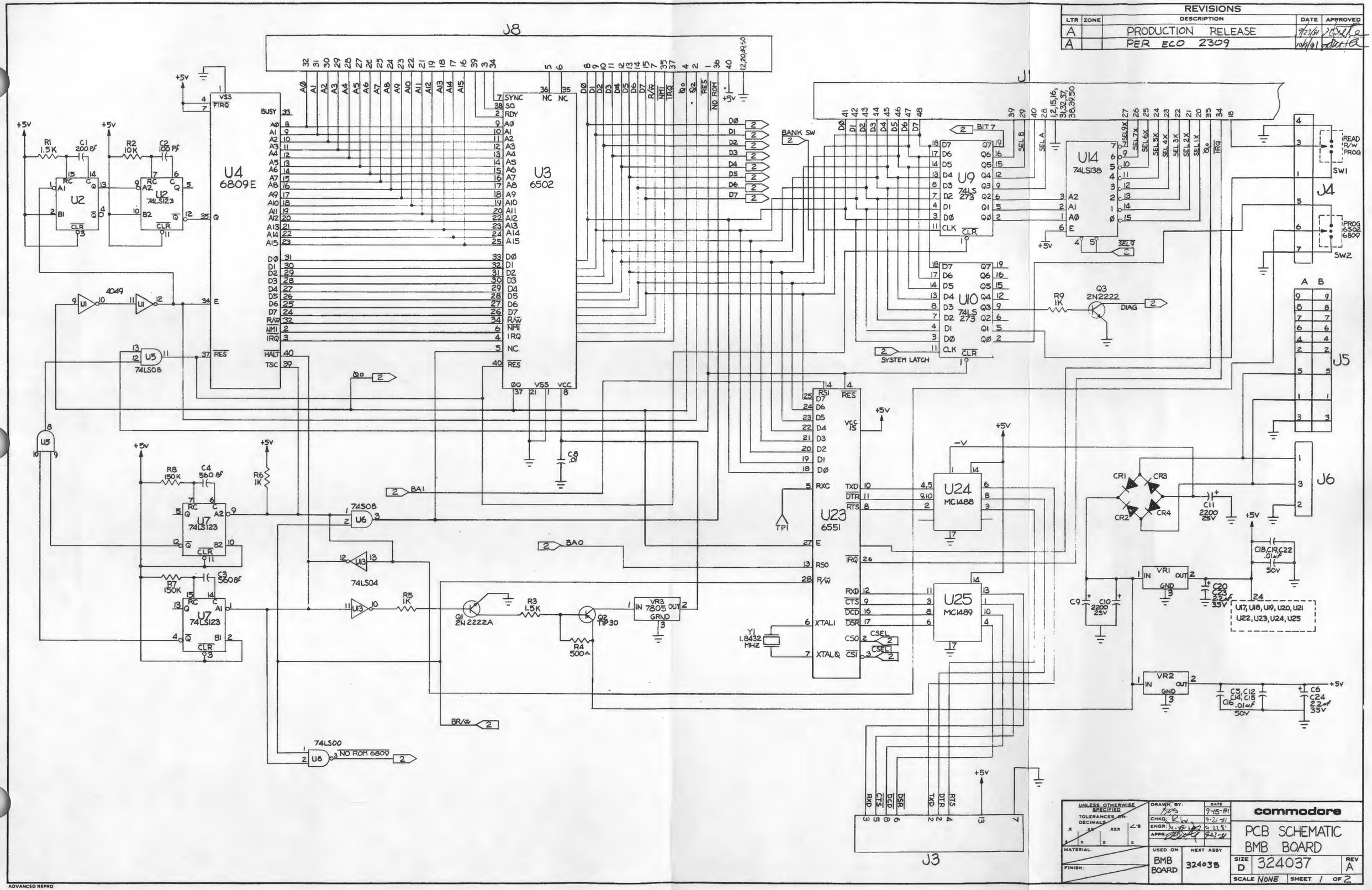
REVISIONS
LTR ZONE DESCRIPTION DATE APPROVED
A PRODUCTION RELEASE 9/23/81
A PER ECO 2309 10/6/81
J8
J1
J3
J4
J5
J6
U4 6809E
U3 6502
U2 74LS123
U7 74LS123
U5 74LS08
U6 74LS08
U13 74LS04
U8 74LS00
U9 74LS 273
U10 74LS 273
U14 74LS138
U23 6551
U24 MC1488
U25 MC1489
Q1 2N2222A
Q2 TIP30
Q3 2N2222
VR3 7805
VR1
VR2
Y1 1.8432 MHZ
BANK SW
SYSTEM LATCH
DIAG
READ R/W PROG
PROG 6502 6809
SW1
SW2
NO ROM 6809
U17, U18, U19, U20, U21
U22, U23, U24, U25
UNLESS OTHERWISE SPECIFIED
TOLERANCES ON DECIMALS
MATERIAL
FINISH
DRAWN BY: 9-15-81
CHKD: 9-21-81
ENGR: 9-22-81
APPR: 9-23-81
USED ON BMB BOARD
NEXT ASSY 324038
commodore
PCB SCHEMATIC
BMB BOARD
SIZE D 324037 REV A
SCALE NONE SHEET 1 OF 2
ADVANCED REPRO

REVISIONS				
LTR	ZONE	DESCRIPTION	DATE	APPROVED
		SEE SHEET 1		

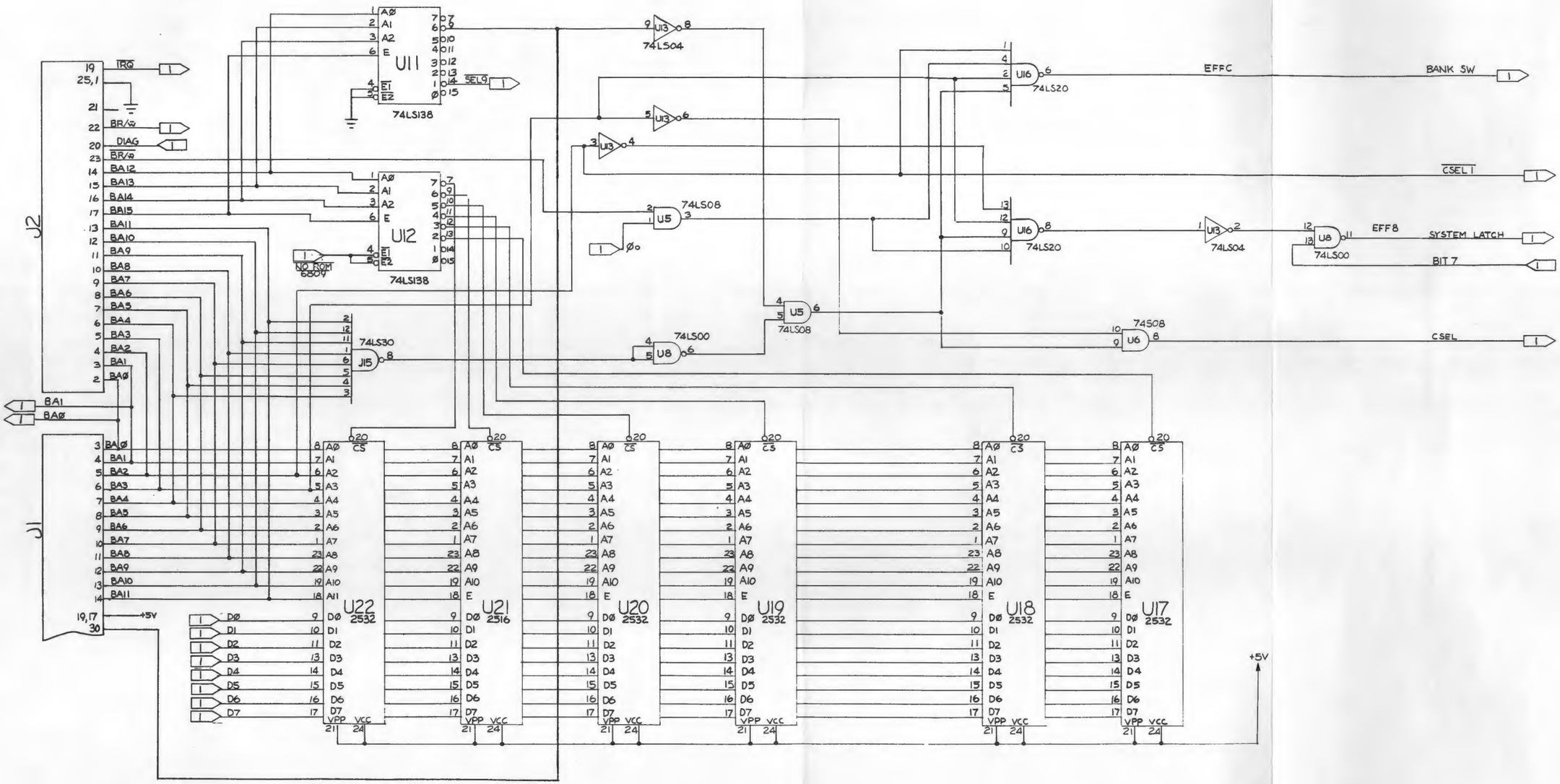

UNLESS OTHERWISE SPECIFIED TOLERANCES ON DECIMALS .X .XX .XXX ∠° MATERIAL: FINISH:	DRAWN BY:	DATE	commodore
	CHKD:	9-15-81	
	ENGR:	9-21-81	PCB SCHEMATIC
	APPR:	9-21-81	BMB BOARD
USED ON: BMB BOARD	NEXT ASSY: 324038	SIZE D	324037 REV A
		SCALE NONE	SHEET 2 OF 2

ADVANCED REPRO

PART NO.	DESCRIPTION
324042-01	PCB ASSY, COMPU-THINK

REVISIONS				
LTR	ZONE	DESCRIPTION	DATE	APPROVED
A		PRODUCTION RELEASE	8/24/81	
A		REV PER ECO 2247	9/24/81	
B		PER ECO 2323	10/29/81	
C		REV PER ECO 2378	11/27/81	

4 REQUIRED WITH REV A ARTWORK ONLY.

3 ITEM 69 CONNECTS INTO ITEM 63.

2. IDENTIFY WITH COMMODORE PART NO. AND APPLICABLE REV LETTER.

1. SHEET 4 OF 4 SIZE D
ASSY DWG
NOTES-UNLESS OTHERWISE SPECIFIED:

commodore	TITLE: PCB ASSY, COMPU-THINK	DRAWN BY: [illegible]	DATE 8-6-81	ENGR: [illegible]	8-24-81	SIZE B	DRAWING NUMBER 324042
		CHKD: R W	8-24-81	APPR: [illegible]	8-24-81		SHEET 1 OF 5

QUANTITY REQD PER PART / DASH NO. 01	ITEM	BS	PART NUMBER	DESCRIPTION	REF DES	BEND	NOTES
1	1	D	324041-01	SCHEMATIC, COMPU-THINK			
1	2	D	324040-01	PCB FAB, COMPU-THINK			
	3						
1	4	B	901522-04	IC, 7400, QUAD NAND	U9, 17		
2	5	B	901521-21	IC, 74LS02, QUAD NOR	U18, 22		
1	6	B	901521-37	IC, 74LS05, HEX INVERTER	U25		
1	7	B	901521-03	IC, 74LS08, QUAD AND	U27		
3	8	B	901521-24	IC, 74LS10, TRIPLE 3-INPUT NAND	U10, 16, 23		
1	9	B	901521-04	IC, 74LS20, DUAL 4-INPUT NAND	U11		
1	10	B	901521-08	IC, 74LS107, J-K FLIP-FLOP	U21		
1	11	B	901521-49	IC, 74LS123, DUAL ONE-SHOT	U26		
1	12	B	901521-50	IC, 74LS132, QUAD NAND W/SCHMITT	U20		
2	13	B	901521-11	IC, 74LS157, QUAD 2-1 MULTIPLEXER	U2, 5		
2	14	B	901522-23	IC, 74157, QUAD 2-1 MULTIPLEXER	U1, 4		
4	15	B	901521-51	IC, 74LS241, OCTAL BUFFER	U6, 8, 12, 14		
1	16	B	901521-13	IC, 74LS244, OCTAL BUFFER	U13		
1	17	B	901521-52	IC, 74LS293, 4 BIT BINARY COUNTER	U7		
1	18	B	901521-45	IC, 74LS393, DUAL 4 BIT BINARY COUNTER	U3		
32	19	B	901470-07	IC, 4116, DYNAMIC RAM	U29-60		
	20						
	21						
1	22		901527-03	VOLTAGE REGULATOR, -5 VOLT	U61		
1	23		901527-01	VOLTAGE REGULATOR, +12 VOLT	U19		
1	24		901527-02	VOLTAGE REGULATOR, +5 VOLT	U24		
1	25		900752-02	DIODE, FAST RECTIFIER	CR3		
2	26		900653-01	DIODE, BRIDGE	CR1, 2		
	27						
1	28	B	900050-18	CAP, DIPPED MICA, 22pf, 500V	C79		
1	29	↑	-19	50pf,	C81		
1	30	↕	-20	62pf	C76		
1	31	↕	-21	82pf	C78		
1	32	↓	-22	100pf	C80		
1	33	B	900050-23	CAP, DIPPED MICA, 180pf, 500V	C77		
63	34	B	900020-01	CAP, MONO, CERAMIC, .1uf, 50V	C1-63		
6	35	B	900402-15	CAP, DIPPED TANT, 10uf, 25V	C65, 67, 73, 74, 75, 82		
3	36	B	900100-44	CAP, ELECT, RADIAL, 470uf, 16V	C68, 69, 72		
1	37	B	900100-49	CAP, ELECT, RADIAL, 470uf, 25V	C66		

commodore

TITLE: PCB ASSY, COMPU/THINK

DRWN BY: Matt — DATE: 8-6-81
CHKD: RW — 8-24-81
ENGR: — DATE:
APPR:

SIZE: B | 324042 | REV: C | SHT: 2/5

QUANTITY REQD PER PART / DASH NO. 01	ITEM	S	PART NUMBER	DESCRIPTION	REF DES	BEND	NOTES
2	38	B	900100-07	CAP, ELECT, RADIAL, 1000Mf, 16V	C70, 71		
	39						
	40						
2	41	B	902422-03	RESISTOR, NETWORK, 8 PIN SIP, 33Ω	RP1, 3		
1	42	B	902442-26	8 PIN SIP, 2K	RP9		
1	43	B	902441-29	6 PIN SIP, 3.3K	RP7		
4	44	B	902442-29	8 PIN SIP, 3.3K	RP2,4,6,8		
1	45	B	902420-48	RESISTOR, NETWORK, 16 PIN DIP, 2K	RP5		
2	46	B	901550-105	RESISTOR, CARBON, 1/4W, 5%, 33Ω	R5,6		
1	47	B	901550-02	RESISTOR, CARBON, 1/4W, 5%, 3.3K	R1		
3	48	B	901550-20	RESISTOR, CARBON, 1/4W, 5%, 10K	R2,3,4		
	49						
	50						
1	51	B	903316-03	HEADER ASSY, .156 CENTERS	P1		3 PIN
1	52	B	903345-25	HEADER ASSY, DUAL ROW, .100 CENTER,	P2		50 PIN
1	53	B	903446-01	CONNECTOR HOUSING, 50 PIN	P3		
	54						
2	55	B	903549-12	FUSE, AXIAL LEAD 3A	F1,2		
	56						
1	57	B	902905-01	HEATSINK, TO-220	XU61		
2	58	B	902911-01	HEATSINK,	XU19,24		
1	59	B	902912-01	HEATSINK,	XU19,24		
	60						
2	61	B	907401-02	WASHER, SHOULDER #4	XU61		
14	62	B	904150-01	IC SOCKET 14 PIN	XU3,7,9-11,16-18,20-23,25,27		
39	63	B	904150-02	IC SOCKET 16 PIN	XU1,2,4,5,26,29-36,37-44,45-52,53-60,64,XRP5		
5	64	B	904149-04	IC SOCKET 20 PIN	XU6,8,12-14		
	65						
	66						
13	67	B	320086-02	BUS WIRE	J1,2,4,5,U15		
	68						
1	69	B	324056-01	PCB ASSY, MEMORY PROTECT			SEE NOTE [3]
	70						
	71						
3	72		906600-06	SCREW, PHILLIPS, 4-40×.438			
3	73		905970-05	KEP NUT 4-40			
	74						

commodore

TITLE: PBC ASSY, COMPU/THINK

DRWN BY: Matthe DATE 8-6-81
CHKD: DATE 8-24-81
ENGR: DATE 8-24-81
APPR:

SIZE B | 324042 | REV C | SHT 3/5

11

QUANTITY REQD PER PART / DASH NO. 01	ITEM	SZ	PART NUMBER	DESCRIPTION	REF DES	BEND	NOTES
	75						
AR	76	B	904907-01	THERMAL COMPOUND			
	77						
1	78	B	903780-01	KYNAR WIRE, 30AWG			SEE NOTE 4
1	79	B	903780-07	KYNAR WIRE, 30AWG			SEE NOTE 4
	80						

commodore	TITLE: PCB ASSY, COMPU/THINK	DRWN BY:	DATE	ENGR:	DATE	SIZE	324042	REV	SHT
		CHKD:		APPR:		B		C	4/5

REVISIONS				
LTR	ZONE	DESCRIPTION	DATE	APPROVED
		SEE SHEET		

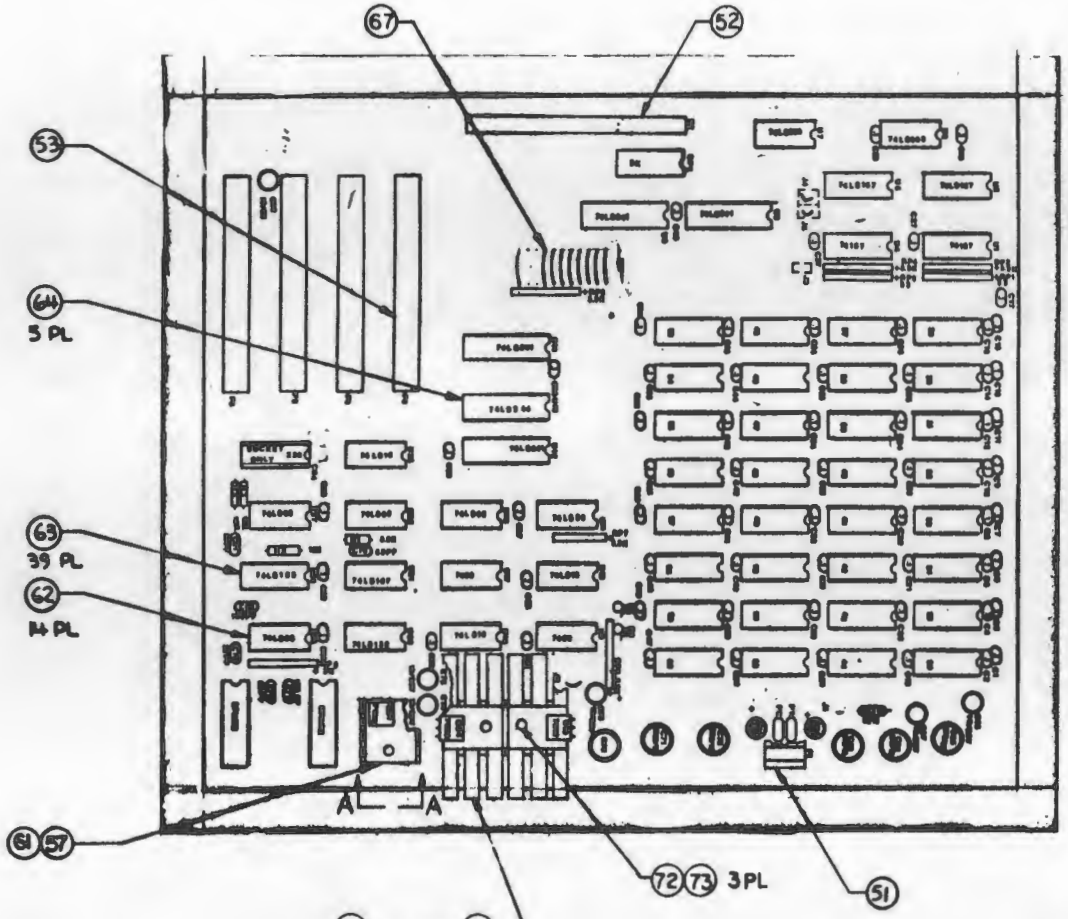

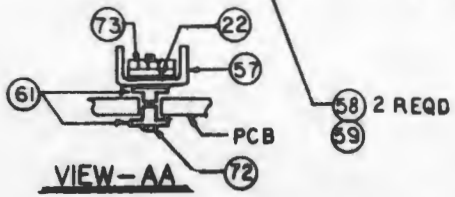

[4] REWORK INSTRUCTIONS:

1. ADD JUMPER FROM U15-12 TO GROUND.
2. ADD JUMPER FROM P2-28 TO COMMON POINT OF J3 AND J5.
3. ADD JUMPER FROM P2-30 TO P3-14
4. CUT OFF PINS 4 & 5 OF U27.

[5] CUT TRACE BETWEEN FEEDTHRUS NEXT TO U11 AND RP7.

6. ADD JUMPERS TO J1, J2, J4, J5 & U15 AS SHOWN.



REWORK INSTRUCTION [5]

-01 SHOWN

UNLESS OTHERWISE SPECIFIED TOLERANCES ON: DECIMALS .XX ±.01 .XXX ±.010 ANGLES ±1°	DRAWN BY: Matt 8-6-81	commodore	
	CHECKED: L 8-24-81	PCB ASSY COMPU/THINK	
	ENGR: 8-28-81		
MATERIAL:	APPR:		
FINISH:	USED ON: SUPER PET	NEXT ASSY: 324050	SIZE C 324042 REV C
			SCALE 1/1 SHEET 5 OF 5

REVISIONS				
LTR	ZONE	DESCRIPTION	DATE	APPROVED
A		PRODUCTION RELEASE	10/6/81	
B		REV PER ECO 2376	1/25/82	

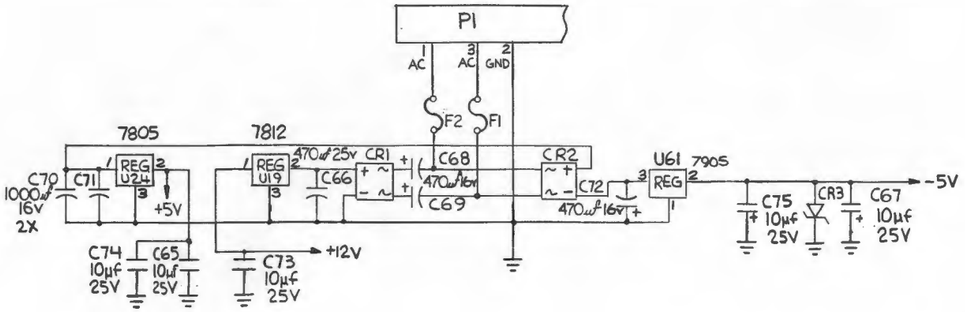

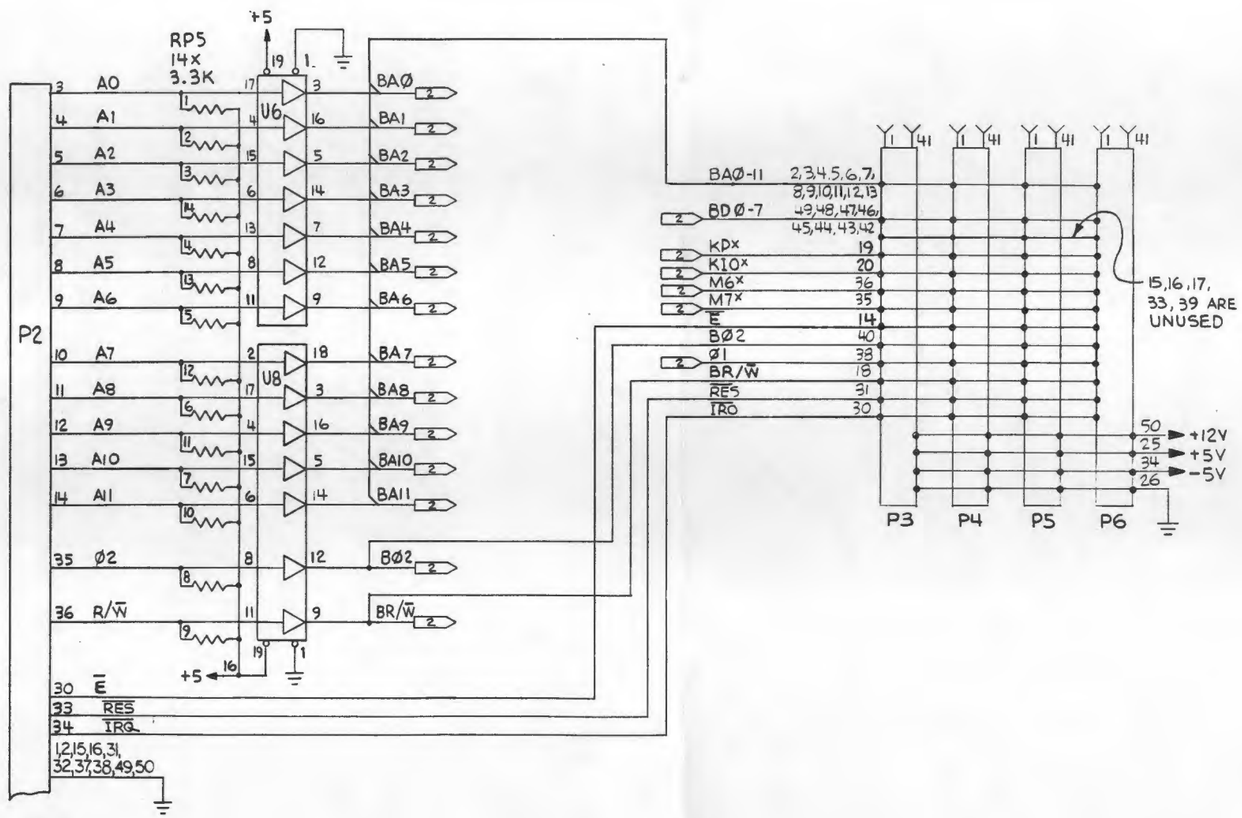

2. CAPACITOR VALUES ARE IN MICROFARADS, 50V.

1. RESISTOR VALUES ARE IN OHMS, 1/4W, ±5%.

NOTES-UNLESS OTHERWISE SPECIFIED:

UNLESS OTHERWISE SPECIFIED TOLERANCES ON DECIMALS .X ±, .XX ±, .XXX ±, ∠ ±, MATERIAL, FINISH	DRAWN BY	DATE	commodore
	CHKD	7-23-81	SCHEMATIC COMPU/THINK
	ENGR:	7-23-81	
	APPR	7-24-81	
	USED ON SUPERPET	NEXT ASSY 9000003	SIZE D 324041 REV B
			SCALE NONE SHEET 1 OF 3

ADVANCED REPRO

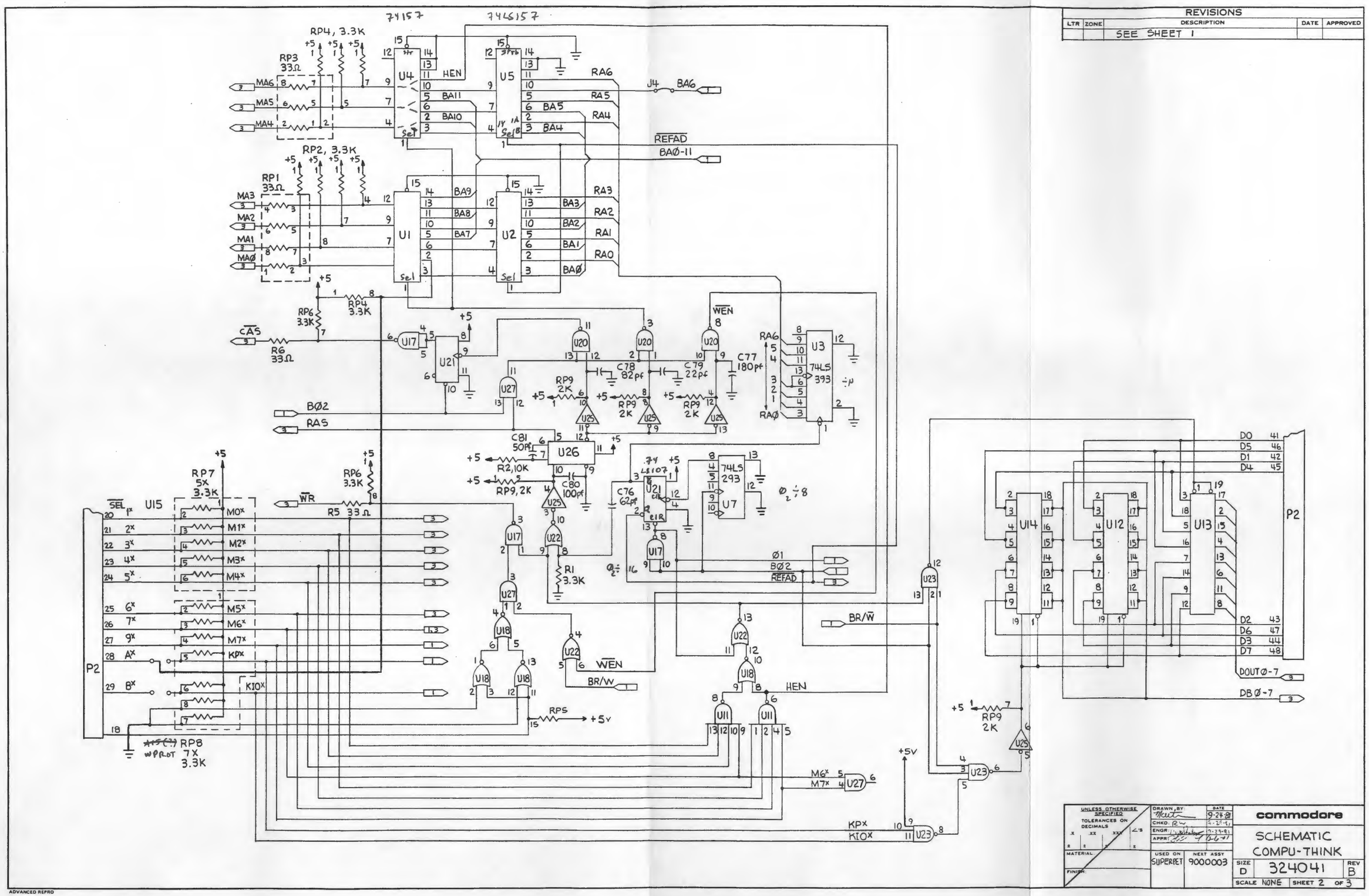

REVISIONS
LTR ZONE DESCRIPTION DATE APPROVED
SEE SHEET 1
74157
74LS157
RP4, 3.3K
RP3 33Ω
RP2, 3.3K
RP1 33Ω
U4
U5
U1
U2
HEN
BA11
BA10
BA9
BA8
BA7
BA6
BA5
BA4
BA3
BA2
BA1
BAØ
RA6
RA5
RA4
RA3
RA2
RA1
RA0
J4
REFAD
BAØ-11
MA6
MA5
MA4
MA3
MA2
MA1
MAØ
RP6 3.3K
RP4 3.3K
CAS
R6 33Ω
U17
U21
U20
U27
U25
U26
U3
74LS 393
WEN
C78 82pf
C79 22pf
C77 180pf
RP9 2K
BØ2
RAS
C81 50pf
R2,10K
RP9,2K
C80 100pf
C76 62pf
74LS 293
U7
Ø1
BØ2
REFAD
RP7 5X 3.3K
U15
SEL
WR
R5 33Ω
M0X
M1X
M2X
M3X
M4X
M5X
M6X
M7X
KPX
KIOX
P2
RP8 7X 3.3K
WPROT
U22
U18
U11
U23
U14
U12
U13
D0
D5
D1
D4
D2
D6
D3
D7
DOUTØ-7
DBØ-7
BR/W
RPS
+5V
M6X
M7X
KPX
KIOX
UNLESS OTHERWISE SPECIFIED
TOLERANCES ON DECIMALS
MATERIAL
FINISH
DRAWN BY
DATE
CHKD.
ENGR.
APPR.
USED ON SUPERPET
NEXT ASSY 9000003
commodore
SCHEMATIC
COMPU-THINK
SIZE D
324041
REV B
SCALE NONE
SHEET 2 OF 3
ADVANCED REPRO

REVISIONS				
LTR	ZONE	DESCRIPTION	DATE	APPROVED
		SEE SHEET 1		

MAØ MA1 MA2 MA3 MA4 MA5 MA6 WR CAS RAS REFAD MOX 1X 2X 3X 4X 5X 6X 7X

+5 RP6

U9 U10 U16

U29 U30 U31 U32 U33 U34 U35 U36
U37 U38 U39 U40 U41 U42 U43 U44
U45 U46 U47 U48 U49 U50 U51 U52
U53 U54 U55 U56 U57 U58 U59 U60

MAØ MA1 MA2 MA3 MA4 MA5 MA6 WR RAS CAS DI DO

VDD VCC VBB VSS

DB7 DB6 DB5 DB4 DB3 DB2 DB1 DB0
DBOUT7 DBOUT6 DBOUT5 DBOUT4 DBOUT3 DBOUT2 DBOUT1

DOUT Ø

+12 +5 -5

C2,6,10,14,19,21,23,25,29,31,33,35,38,40,42,44,47,49,51,53 .1µ

C1,3,5,7,9,13,15,17,18,27,28,46,55,56,57,58,59,60,61,62,63,64 .1µ

C4,8,12,16,20,22,24,30,32,34,36,47,48,50,52,54 .1µ

ADVANCED REPRO

UNLESS OTHERWISE SPECIFIED TOLERANCES ON DECIMALS .X ±, .XX ±, .XXX ±, ∠'S ±	DRAWN BY:	DATE 5-21-81	commodore
	CHKD	9-29-81	SCHEMATIC COMPU/THINK
	ENGR:	9-29-81	
MATERIAL: FINISH:	APP'D	10-1-81	USED ON SUPERPET / NEXT ASSY 9000003 / SIZE D / 324041 / REV B / SCALE NONE / SHEET 3 OF 3

16

PART NO.	DESCRIPTION
324056-01	PCB ASSY, MEMORY PROTECT

REVISIONS

LTR	ZONE	DESCRIPTION	DATE	APPROVED
A		PRODUCTION RELEASE	8-27-81	
B		REV PER ECO 2302	10/9/81	

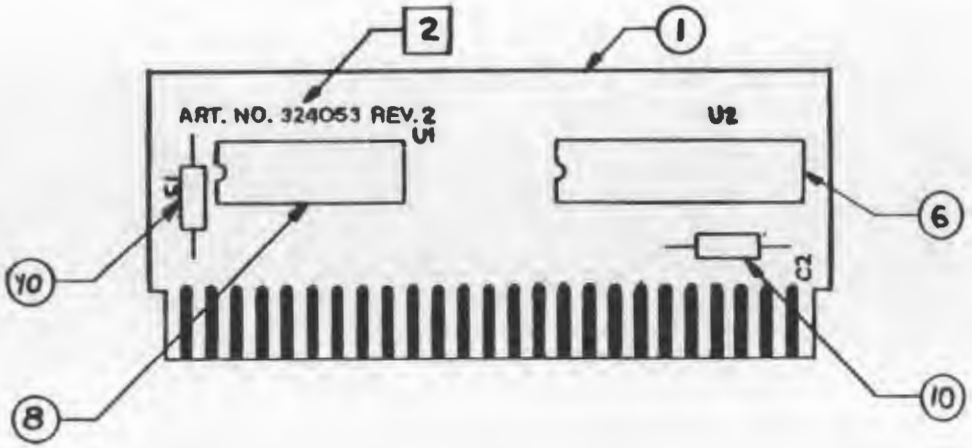

QUANTITY REQD PER PART / DASH NO. 01	ITEM	SS	PART NUMBER	DESCRIPTION	REF DES
1	1	B	324054-01	PC B FAB, MEMORY PROTECT	
	2				
REF	3	C	324055-01	LOGIC DIAGRAM, MEMORY PROTECT	
	4				
	5				
1	6	B	901889-01	I.C. 6702	U2
	7				
1	8	B	901521-16	I.C. 74LS138	U1
	9				
2	10	B	900461-28	CAP, CERAMIC AXIAL, .1μF, 50V	C1, 2
	11				

DRAWN BY: R W	DATE 8-25-81
CHKD:	8-26-81
ENGR:	8-27-81
APPR:	
USED ON: SUPER PET	NEXT ASSY: 324042

commodore

PCB ASSY
MEMORY PROTECT

SIZE B | 324056 | REV B

SCALE 2/1 | SHEET | OF

17

REVISIONS				
LTR	ZONE	DESCRIPTION	DATE	APPROVED
A		PRODUCTION RELEASE	8-27-81	

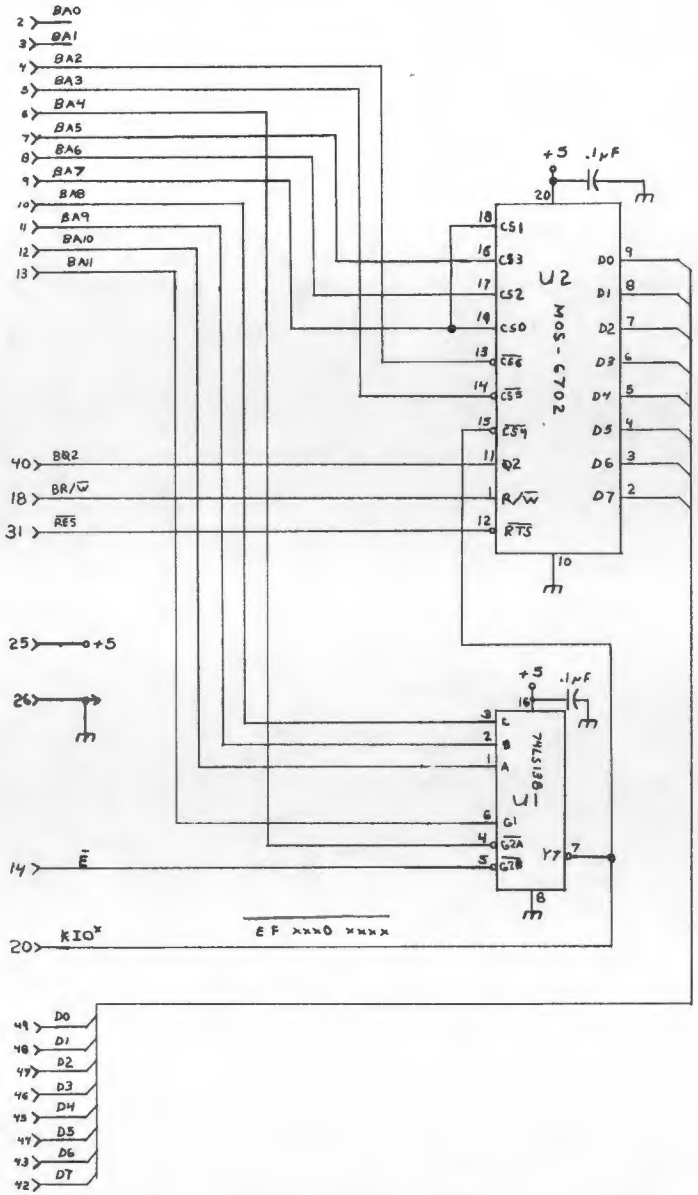

EF 1110 00XX

EFE 00XX

EFE0 — EFE3 : D6

1101 1010

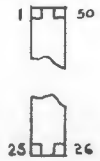

-01 SHOWN

UNLESS OTHERWISE SPECIFIED TOLERANCES ON: DECIMALS .X ± .XX ± .XXX ± ∠ ±	DRAWN BY: R.W.	DATE	commodore
	CHKD:	8-26-81	
	ENGR:	8-27-81	LOGIC DIAGRAM
	APPR:	8-27-81	
MATERIAL:	USED ON: SUPER PET	NEXT ASSY: 324056	SIZE C 324055 REV A
FINISH:			SCALE NONE SHEET 1 OF 1

ADVANCED REPRO

PART NO.	DESCRIPTION
9000007-01	PCB ASSY S.P. COMBO - 60 HZ

(Fold Here)

DWG. NO. 9000007

TITLE: PCB ASSY S.P. COMBO

P/N 9000007

REVISIONS

LTR	ZONE	DESCRIPTION	DATE	APPROVED
A		PRODUCTION RELEASE	3/10/82	[illegible]
B		REV PER ECO 2566	3/17/82	[illegible]
C		REV PER ECO 2586	3/30/82	[illegible]
D		REVISED PER ECO 2621	4/6/82	[illegible]
E		REV PER ECO 2631	4/22/82	[illegible]
F		REV PER ECO 2650	5-5-82	[illegible]
G		REVISED PER ECO 2731	6-1-82	[illegible]
H		REVISED PER ECO 2807	8/31/82	EPS [illegible]

1. SHEET 4 OF 4 SIZE D

ASSY DWG

NOTES-UNLESS OTHERWISE SPECIFIED:

commodore	DRAWN BY: S. Villanueva	DATE 2-4-82	ENGR Alex Verot	3.8.82	SIZE B	SHEET 1 OF 4
	CHKD Rigo	3-10-82	APPR: [illegible]	3-10-82		

QUANTITY REQD PER PART / DASH NO. 01	ITEM	DS	PART NUMBER	DESCRIPTION	REF DES		NOTES
REF	1		9000008	PCB FABRICATION SUPER PET PCB			
REF	2		9000016	SCHEMATIC DIAGRAM SUPER PET			
	3						
1	4		901521-02	IC,74LS04, HEX INVERTER	U1		
1	5		901525-01	,74S04, HEX INVERTER	U2		
1	6		901521-45	,74LS393, DUAL 4BIT BINARY COUNTER	U3		
1	7		901521-07	,74LS93, 4BIT BINARY COUNTER	U4		
1	8		901519-01	,74LS11, TRIPLE 3INPUT POS.-AND GATES	U5		
1	9		901521-28	,74LS164, 8BIT PARALLEL OUT SERIAL SHIFT REG.	U6		
2	10		901522-23	,74157, QUAD 2 TO 1 LINE DATE MUX	U10-U11		
1	11		901521-49	,74LS123, DUAL ONE-SHOT	U12		
1	12		901893-01	,6809E, CPU	U13		
2	13		901521-06	,74LS74, DUAL D-TYPE F-F	U14,U37		
1	14		901518-01	,74S37, QUADRUPLE 2INPUT NAND BUFFERS	U15		
1	15		901525-05	,74S08, QUADRUPLE 2INPUT AND GATES	U16		
1	16		901435-01	,6502, CPU	U17		
3	17		901521-47	,74LS367, HEX BUS DRIVERS	U18-U20		
1	18		901521-46	,74LS245 OCTAL BUS TRANSCEIVER	U21		
8	19		901505-01	64K × 1 DYNAMIC RAM	U22-U29		
2	20		901521-16	,74LS138 3 TO 8 DECODER	U30,U42		
1	21		901521-53	,74LS30 8INPUT POS.-NAND GATE	U31		
1	22		901521-04	,74LS20 DUAL 4INPUT POS.-NAND GATE	U32		
2	23		901521-31	,74LS32 OUADRUPLE 2INPUT POS.-OR GATE	U33,U34		
2	24		901521-42	,74LS273 OCTAL D F-F	U35,U36		
3	25		901521-11	,74LS157, QUAD 2 TO 1 LINE DATE MUX	U7-U9		
1	26		901524-07	,MC1489 RECEIVER	U38		
1	27		901524-06	,MC1488 LINE DRIVER	U39		
1	28		901895-01	,6551 ACIA	U40		
1	29		901889-01	,6702 SECURITY	U41		
1	30		901521-24	,74LS10 TRIPLE 3INPUT NAND GATES	U43		
1	31		901521-18	,74LS139 DUAL 2 TO 4 MUX	U44		
1	32		970018-12	64K ROM BINARY LISTING A000-BFFF	U47		
1	33		970019-12	64K ROM BINARY LISTING C000-DFFF	U48		
1	34		970020-12	64K ROM BINARY LISTING E000-FFFF	U49		
1	35		901521-03	,74LS08 QUADRUPLE 2INPUT AND GATES	U50		
–	36		970034-12	IC. 64K ROM BINARY LISTING E000-FFFF	U49		
	37						

commodore	TITLE: PCB ASSY S.P. COMBO	DRWN BY: S. Cullonzo	DATE 2/9/82	ENGR: Alex. Vinot	DATE 3.8.82	SIZE	9000007	REV H	SHT 2/4
		CHKD: [illegible]	3-10-82	APPR:					

QUANTITY REQD PER PART / DASH NO. 01	ITEM	BS	PART NUMBER	DESCRIPTION	NOTES	NOTES
2	38		901527-02	7805 VOLTAGE REGULATOR +5V	VR1 VR2	
	39					
	40					
4	41		902847-03	2N2222, TRANSISTOR NPN	Q1,Q2,Q4,Q5	
1	42		902704-01	2N4403, TRANSISTOR PNP	Q3	
	43					
10	44		901550-105	RESISTOR, CARBON 1/4W 5% 33Ω	R8-R17	
1	45		901550-38	510Ω	R7	
1	46		901550-31	680Ω	R21	
2	47		901550-01	1KΩ	..,R4, R22	
2	48		901550-32	1.3KΩ	R19, R20	
1	49		901550-69	1.5KΩ	R6	
4	50		901550-02	3.3KΩ	R18, R24, R1, R5	
3	51		901550-12	22KΩ	R23, R2, R3	
2	52		901550-94	RESISTOR, CARBON 1/4W 5% 68Ω	R25, R26	
	53					
	54					
39	55		900461-16	CAP, CERAMIC 50V/.01 μF	C6-C41, C1-C3	
	56					
	57					
2	58		900109-01	CAP, ELECT. 25V/4.7μF	C4, C5	
	59					
	60					
3	61		904150-04	IC SOCKET, 24 PIN	XU45, U46, U49	
2	62		904150-06	IC SOCKET, 40 PIN	XU13, U17	
1	63		904150-08	IC SOCKET, 20 PIN	XU41	
1	64		900555-02	CRYSTAL, 1.8432 MHz	Y1	
	65					
1	66		903345-20	HEADER ASSY, DUAL ROW .100 CENTERS 40 PIN	J1	
1	67		903326-07	HEADER ASSY, 100 CENTERS 7 PIN	J2	REMOVE PIN 2
1	68		903326-01	HEADER ASSY, 1 PIN	J3	
1	69		903266-01	CONNECTOR RIGHT ANGLE RS-232	J4	
1	70		903327-07	HEADER ASSY .100 CENTER 7 PIN	J5 REMOVE PIN	3 & 4 AT ASS
	71					
1	72		903025-01	FERRITE BEAD	FB1	
1	73		902913-01	HEATSINK		
	74					

commodore

TITLE: PCB ASSY S.P. COMBO

DRWN BY: S. Cellanza DATE 2/4/82
CHKD: [illegible] DATE 3-10-82
ENGR: Alan Wurt DATE 3.8.82
APPR:

SIZE | 9000007 | REV H | SHT 3/4

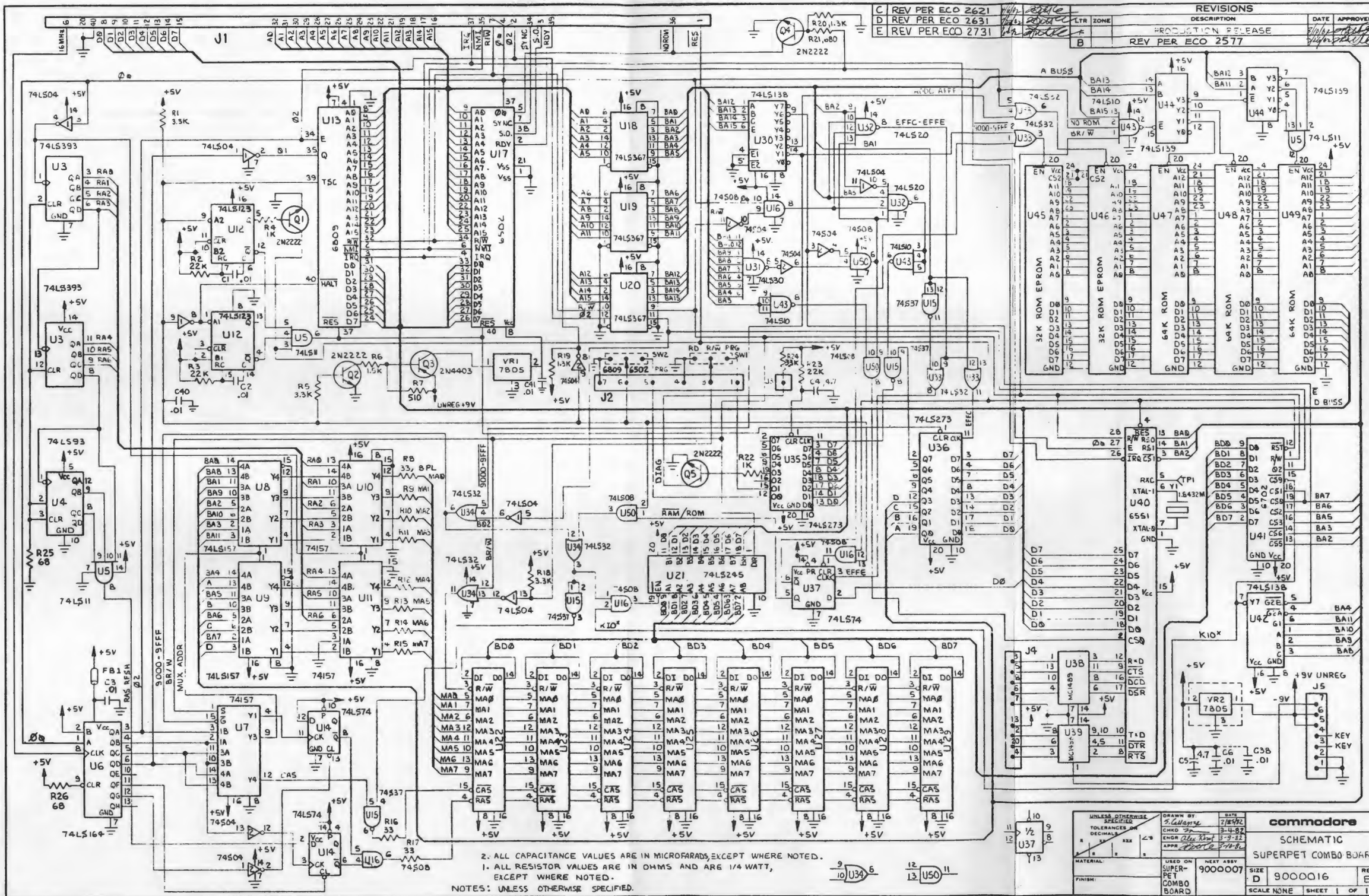
REVISIONS
C REV PER ECO 2621
D REV PER ECO 2631
E REV PER ECO 2731
LTR ZONE DESCRIPTION DATE APPROVED
F PRODUCTION RELEASE
B REV PER ECO 2577
J1
J2
J4
J5
U17 6502
U13 6809
U40 6551
U45 32K ROM EPROM
U46 32K ROM EPROM
U47 64K ROM
U48 64K ROM
U49 64K ROM
U21 74LS245
U35 74LS273
U36 74LS273
U37 74LS574
U7 74157
U8 74LS157
U9 74LS157
U10 74157
U11 74157
U14 74LS574
U6 74LS164
U4 74LS93
U3 74LS393
U12 74LS123
U5 74LS11
U18 74LS367
U19 74LS367
U20 74LS367
U30 74LS138
U31 74LS30
U32 74LS20
U33 74LS32
U34 74LS32
U44 74LS139
U42 74LS138
U38 MC1489
U39 MC1489
VR1 7805
VR2 7805
Q1 2N2222
Q2 2N2222
Q3 2N4403
Q4 2N2222
Q5 2N2222
TP1 1.6432M
FB1
R25 68
R26 68
R1 3.3K
R2 22K
R3 22K
R4 1K
R5 3.3K
R6 1.5K
R7 510
R8 33, 8PL
R9 MA1
R10 MA2
R11 MA3
R12 MA4
R13 MA5
R14 MA6
R15 MA7
R16 33
R17 33
R18 3.3K
R19 1.3K
R20 1.3K
R21 680
R22 1K
R23 22K
C1 .01
C2 .01
C3 .01
C4 4.7
C5 4.7
C6 .01
C38 .01
C40 .01
C41 .01
9000-9FFF
BR/W
MUX ADDR
RAS REFSH
Ø2
Ø0
A BUSS
D BUSS
+9V UNREG
-9V
KEY
2. ALL CAPACITANCE VALUES ARE IN MICROFARADS, EXCEPT WHERE NOTED.
1. ALL RESISTOR VALUES ARE IN OHMS AND ARE 1/4 WATT, EXCEPT WHERE NOTED.
NOTES: UNLESS OTHERWISE SPECIFIED.
UNLESS OTHERWISE SPECIFIED
TOLERANCES ON DECIMALS
MATERIAL:
FINISH:
DRAWN BY
CHKD
ENGR
APPR
DATE
USED ON SUPER-PET COMBO BOARD
NEXT ASSY 9000007
commodore
SCHEMATIC
SUPERPET COMBO BOARD
SIZE D 9000016 REV E
SCALE NONE SHEET 1 OF 1
ADVANCED REPRO

REVISIONS				
LTR	ZONE	DESCRIPTION	DATE	APPROVED
		SEE SHEET 1		

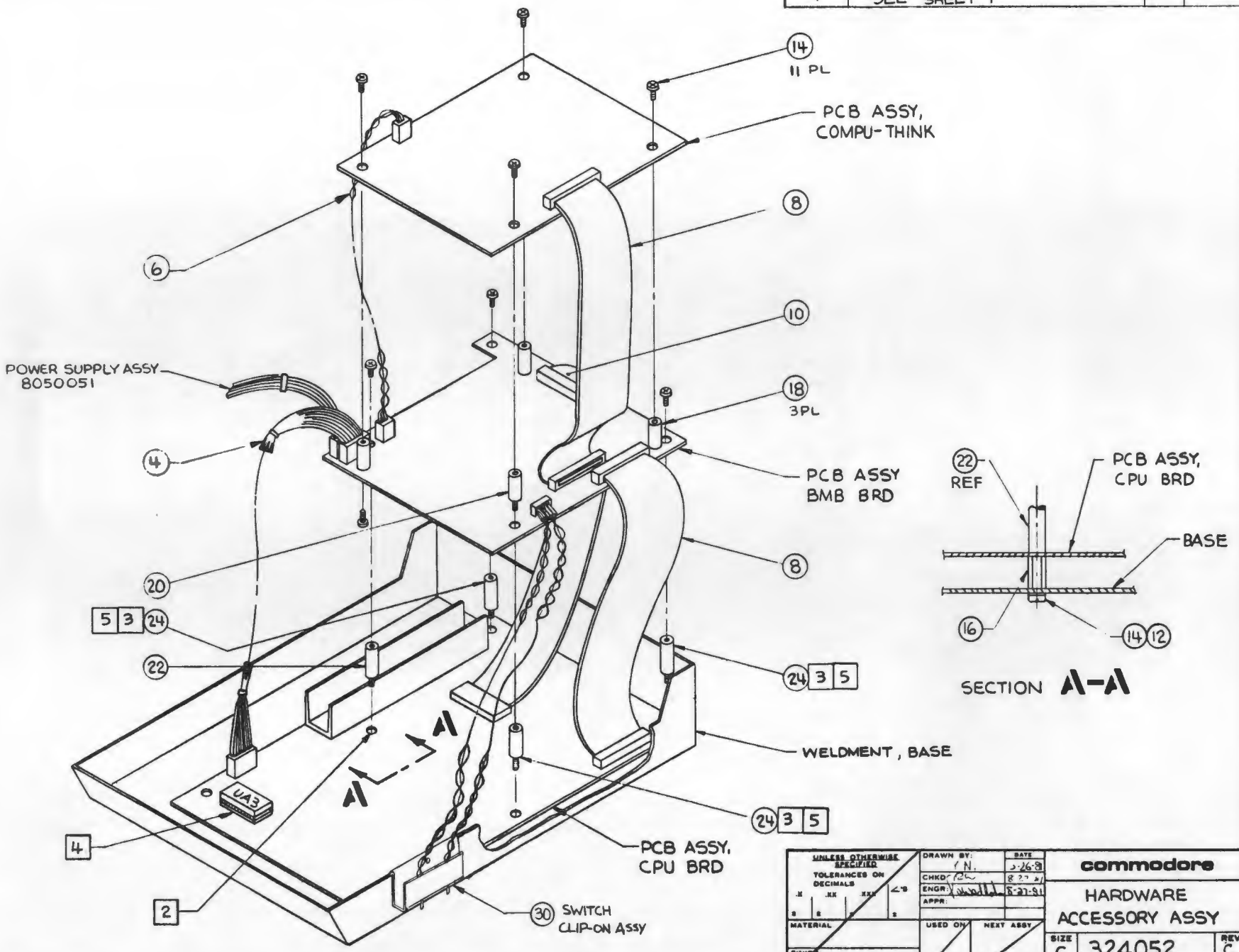

SECTION A-A

UNLESS OTHERWISE SPECIFIED TOLERANCES ON DECIMALS .X ±.1 .XX ±.01 .XXX ±.005 ∠ ±1°	DRAWN BY: T.N.	DATE: 5-26-91
	CHKD: RW	8-27-91
	ENGR: [illegible]	8-27-91
	APPR:	
MATERIAL:	USED ON:	NEXT ASSY:
FINISH:		

commodore

HARDWARE
ACCESSORY ASSY

SIZE	324052	REV
C		C

SCALE NONE SHEET 3 OF 3

ADVANCED REPRO

REVISIONS				
LTR	ZONE	DESCRIPTION	DATE	APPROVED
		SEE SHEET 1		

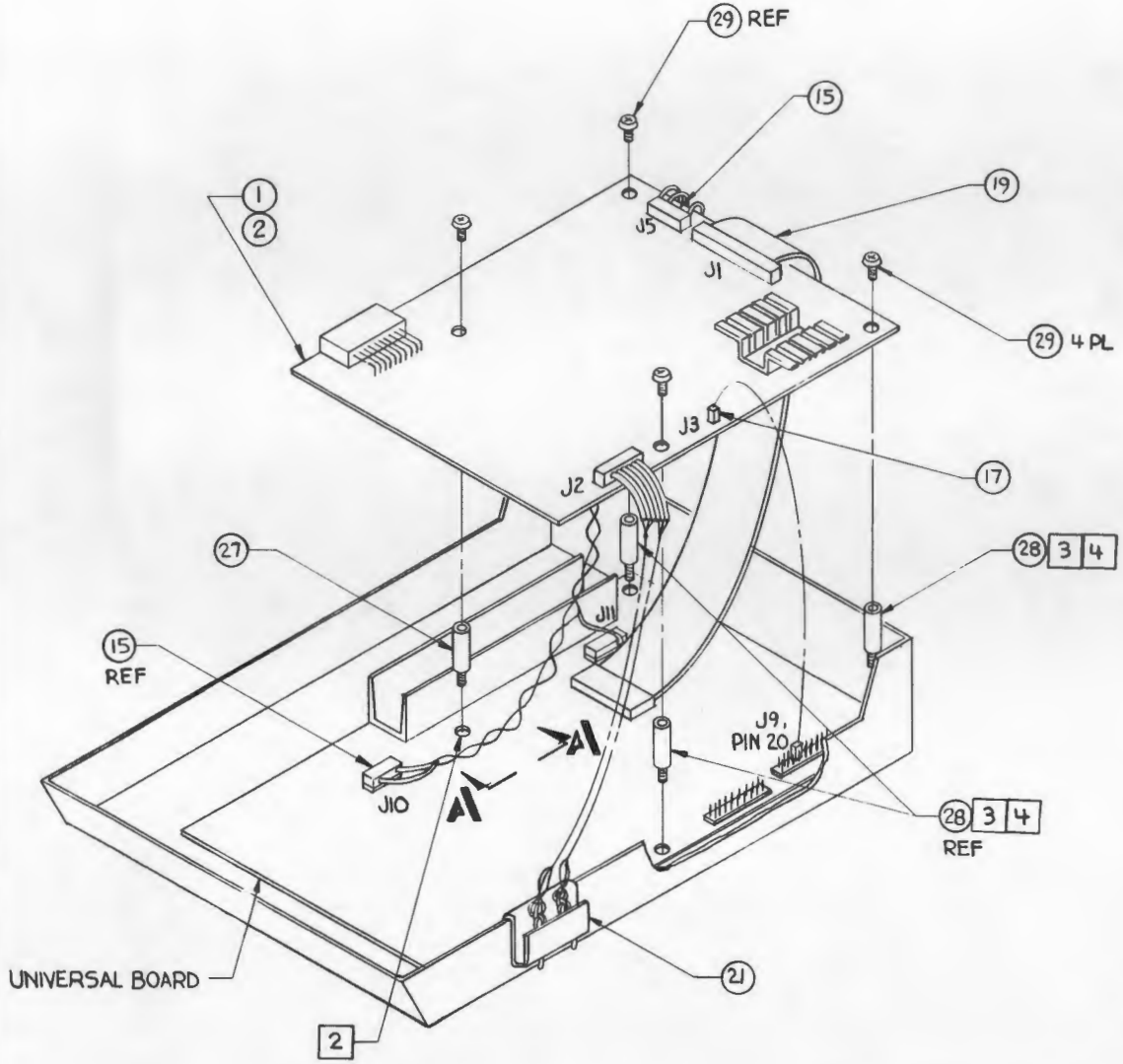

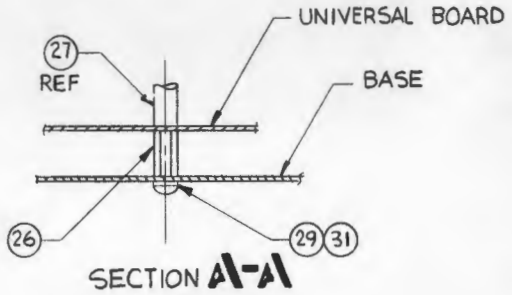

UNLESS OTHERWISE SPECIFIED TOLERANCES ON: DECIMALS .X ± .XX ± .XXX ± ∠ ±	DRAWN BY:	DATE 3-15-82	commodore
	CHKD: S.C.	3-17-82	8032/SUPERPET COMBO CONVERSION KIT
	ENGR: D.B.A. (Chris)	3-18-82	
	APPR:		
MATERIAL:	USED ON	NEXT ASSY	SIZE C 9000035 REV B
FINISH:			SCALE NONE SHEET 3 OF 7

PART NO.	DESCRIPTION
8032090-01	UNIV. DYNAMIC PET 8032-60Hz
-03	4032-60Hz (12")
-05	4016-60Hz
-07	UNIV. SUPER PET 9000-60Hz
-09	UNIV. SUPERPET, COMBO-BRD 9000-60Hz
8032090-11	UNIV. DYNAMIC PET, 4032-9"-60Hz

[9] REWORK INSTRUCTIONS FOR FCC: JUMPER WIRE FROM UD3 PIN 1 TO UB14 PIN 35. USE 22 AWG (IT. 108). THIS CONFIGURATION IS FOR -09 & -10 ONLY.

[8] UD11 & 12 NOT FOR -07, -08, -09 & -10

[7] IDENTIFY WITH APPLICABLE DASH NO.

[6] SOLDER TO XTAL AND PCB.

[5] FOR ITEMS 118 & 119, ALL ASSEMBLIES MUST HAVE SAME VENDOR.

[4] SOLDER JUMPER, ITEM 106 FROM E1 TO SILVER CONTACT ON MT1, ITEM 73; TAKE CARE TO ALLOW NO MOVE THAN ONE SECOND DURATION FOR APPLICATION OF HEAT DURING SOLDERING.

REVISIONS

LTR	ZONE	DESCRIPTION	DATE	APPROVED
A		PRODUCTION RELEASE	6/23/81	
B		REV PER ECO 2157	7/16/81	
C		REV PER ECO 2172	9/6/81	
D		REV PER ECO 2237	9/24/81	
D		REV PER ECO 2308	10/2/81	
E		REV PER ECO 2368	11/4/81	
E		PER ECO 2414	2/9/82	
F		REV PER ECO 2565 & 2555	3/19/82	
G		REVISED PER ECO 2887		
H		REVISED PER ECO 3027		

[11] CUT PINS 9 & 10 AT UE7. CONNECT PIN 9 TO GND.

[10] CONNECT ITEM 43 FROM PIN 15 OF UA19 TO VCC (+5V).

[4] REFER TO PART SUBSTITUTION INDEX, P/N 321233.

[3] SOLDER AT 3 PLACES, EQUALLY SPACED AROUND THE BRASS BASE MT1 (ITEM 73)

[2] IDENTIFY WITH APPLICABLE DASH NO.

1. SHEET 6 OF 7 SIZE C, SHEET 7 OF 7 SIZE D.

NOTES: UNLESS OTHERWISE SPECIFIED:

commodore	TITLE: PCB ASSY - UNIV. DYNAMIC PET	DRAWN BY:	DATE 3-11-81	ENGR:	SIZE B	DRAWING NUMBER 8032090
		CHKD.	6-17-81	APPR:		SHEET OF 7

QUANTITY REQD PER PART / DASH NO.											ITEM	BS	PART NUMBER	DESCRIPTION	REF DES	BEND	NOTES
11	10	09	08	07	06	05	04	03	02	01							
1		1		1		1		1		1	1	D	8032088-01	FABRICATION-UNIV. DYNAMIC PET			
REF		REF		REF		REF		REF		REF	2	D	8032087-01	LOGIC DIAGRAM-UNIV. DYNAMIC PET			
-		1		1		1		-		-	3	B	901640-01	IC 2332	UA3		
3		3		3		3		3		3	4	B	901521-01	,74LS00	UD5,UE5,UE11		
3		3		3		3		3		3	5	B	901521-24	,74LS10	UD4,UE7,UE13		
1		1		1		1		1		1	6	B	901522-20	,7425	UE14		
1		1		1		1		1		1	7	B	901521-02	,74LS04	UE15		
1		1		1		1		1		1	8	B	901523-01	,LM555	UD16		
1		1		1		1		1		1	9	B	901522-01	,7417	UD15		
1		-		-		1		1		1	10	B	901435-01	,6502	UB14		
1		1		1		1		1		1	11	B	901479-01	,CRT CONTROLLER	UB13		
1		1		1		1		1		1	12	B	901522-13	,74154	UE12		
2		2		2		2		2		2	13	B	901436-01	,6520	UB12,UB16		
3		3		3		3		3		3	14	B	901524-01	,MC3446	UA20,UB17,UC12		
1		1		1		1		1		1	15	B	901437-01	,6522	UB15		
1		1		1		1		1		1	16	B	901521-09	,74LS145	UC11		
2		2		2		2		2		2	17	B	901521-45	,74LS393	UD3,UE6		
1		1		1		1		1		1	18	B	901521-21	,74LS02	UD1		
2		2		2		2		2		2	19	B	901525-09	,7474	,UC1,UE1		
2		2		2		2		2		2	20	B	901525-01	,74S04	UD2,UE4		
2		2		2		2		2		2	21	B	901521-06	,74LS74	UB2,UB1		
1		1		1		1		1		1	22	B	901522-28	,74166	UA2		
1		-		-		1		1		1	23	B	901447-10	,2316	UA3		
1		1		1		1		1		1	24	B	901521-32	,74LS86	UC2		SEE NOTE [4]
1		1		1		1		1		1	25	B	901521-28	,74LS164	UE3		SEE NOTE [4]
1		1		1		1		1		1	26	B	901521-16	,74LS138	UC3		
4		4		4		4		4		4	27	B	901521-11	,74LS157	UC8-UC10,UE2		SEE NOTE [4]
											28						
											29						
1		1		1		1		1		1	30	B	901465-22	,2332	UD6		
1		1		1		1		1		1	31	B	901465-21	,2332	UD8		
1		1		1		1		1		1	32	B	901465-20	,2332	UD9		
1		1		1		1		1		1	33	B	901465-23	,2332	UD10		
											34						
1		1		1		1		1		1	35	B	901522-04	IC ,7400	UF1		
1		1		1		1		1		1	36	B	900110-07	CAP, LOW LEAK. ELECT. 1μF 50V	C10		
56		56		56		56		56		56	37	B	900461-28	CAP, CERAMIC AXIAL .1μF 50V	C12-15,18,20-22,25-28,30-50,53,55-59,62-72,75,87,89,90,95,96		

commodore	TITLE: PCB ASSY-UNIV. DYNAMIC PET	DRWN BY:	DATE: 3-11-81	ENGR:	DATE	SIZE: B	8032090	REV: H	SHT: 2/7
		CHKD:	6/7-81	APPR:					

QUANTITY REQD PER PART / DASH NO.											ITEM	DS	PART NUMBER	DESCRIPTION	REF DES	BEND	NOTES
11	10	09	08	07	-06	-05	-04	-03	-02	-01							
3		3		3		3		3		3	38	B	900461-16	CAP, CERAMIC AXIAL .01µF 50V	C52,60,61		
2		2		2		2		2		2	39	B	900461-20	, CERAMIC AXIAL .022µF 50V	C3,4		
1		1		1		1		1		1	40	B	900100-45	, ELECTROLYTIC 4700µF 25V	C5		
1		1		1		1		1		1	41	B	900100-44	, ELECTROLYTIC 470µF 16V	C2		
5		5		5		5		5		5	42	B	900109-03	, LOW LEAK. ELECT. 10µF 25V	C1,16,17,23,24		SEE NOTE 4
1		1		1		1		1		1	43	B	900050-21	, DIPPED MICA, RADIAL, 82pF, 500V	C97		SEE NOTE 10
2		2		2		2		2		2	44	B	900402-13	, TANTALUM 1µF 35V	C6, ,51		
2		2		2		2		2		2	45	B	900101-37	, ELECTROLYTIC 47µF 16V	C7,11		
1		1		1		1		1		1	46	B	900463-08	, CERAMIC AXIAL 220 pF	C92		
14		14		14		14		14		14	47	B	900462-29	CAP , CERAMIC AXIAL 47pF	C74-C86, C88		
											48						
2		2		2		2		2		2	49	B	901550-84	RES, CARBON 1/4W 5% 1M	R24,25		
3		3		3		3		3		3	50	B	901550-58	470Ω	R13,16,17		
4		4		4		4		4		4	51	B	901550-94	68Ω	R10, 11, 46, 49		
2		2		2		2		2		2	52	B	901550-03	5.1K	R19,21		
2		2		2		2		2		2	53	B	901550-85	2.4K	R18,20		
1		1		1		1		1		1	54	B	901550-64	10Ω	R8		
2		2		2		2		2		2	55	B	901550-20	10K	R23,27		
2		2		2		2		2		2	56	B	901550-69	1.5K	R47,48		
8		8		8		8		8		8	57	B	901550-49	100Ω	R32-38, 40		
1		1		1		1		1		1	58	B	901550-19	4.7K	R51		
1		1		1		1		1		1	59	B	901550-18	2.2K	R53		
2		2		2		2		2		2	60	B	901550-56	47Ω	R50,52		
											61						
											62	B					
											63	B					
1		1		1		1		1		1	64	B	901550-93	39Ω	R7		
16		16		16		16		16		16	65	B	901550-01	1K	R1-6,12,15,22,26,28,39,42-45.		
1		1		1		1		1		1	66	B	901550-02	, CARBON 1/4W 5% 3.3K	R14		
1		1		1		1		1		1	67	B	902419-66	RES, NETWORK, DIP 14 PIN 10K	UB11		
											68						
2		2		2		2		2		2	69	B	902653-01	TRANSISTOR, TIP 29	Q1, Q2		
1		1		1		1		1		1	70	B	902550-01	TRANSISTOR, PACK Q2T2222	UE16		
											71						
											72						
1		1		1		1		1		1	73	B	907300-02	TRANSDUCER-PIEZO ACOUSTIC	MT1		
											74						

commodore	TITLE: PCB ASSY-UNIV. DYNAMIC PET	DRWN BY: [signature] DATE 3-11-81 CHKD: [signature] 6-17-81	ENGR: APPR: DATE	SIZE B	8032090	REV H	SHT 3/7

QUANTITY REQD PER PART / DASH NO.											ITEM	DS	PART NUMBER	DESCRIPTION	REF DES	BEND	NOTES
11	10	09	08	07	-06	-05	-04	-03	-02	-01							
											75						
3		3		3		3		3		3	76	B	900750-05	DIODE, IN4005	CR1,5,7		
2		2		2		2		2		2	77	B	900757-01	, BRIDGE 4A/50V	CR2,4		SEE NOTE [4]
1		1		1		1		1		1	78	B	900753-01	, IN5402 3A/200V	CR3		
											79						
											80						
2		2		2		2		2		2	81	B	900941-01	DIODE, ZENER 7.5V	VR5,6		
											82						
1		1		1		1		1		1	83	B	901527-03	VOLTAGE REGULATOR, 7905, -5V/1.5A	VR1		TO-220
											84						
1		1		1		1		1		1	85	B	901528-04	VOLTAGE REGULATOR, 7812, +12V/1A	VR2		TO-3
1		1		1		1		1		1	86	B	901528-01	VOLTAGE REGULATOR, LM323	VR4		
											87						
1		1		1		1		1		1	88	B	900556-02	CRYSTAL 16MHZ	Y1		
											89						
1		1		1		1		1		1	90	B	903326-07	HEADER ASSY .100 CENTER	J10		7 PIN; REMOVE PIN 3 AT ASSEMBLY
2		2		2		2		2		2	91	B	903345-25	HEADER ASSY, DUAL ROW .100 CENTER	J4,9		50 PIN
1		1		1		1		1		1	92	B	903316-09	HEADER ASSY .156 CENTER	J8		9 PIN; REMOVE PIN 7 AT ASSEMBLY
1		1		1		1		1		1	93	B	903331-07	HEADER ASSY, POLARIZED .100 CENTER	J11		7 PIN; REMOVE PIN 3 AT ASSEMBLY
1		1		1		1		1		1	94	B	903331-07	HEADER ASSY, POLARIZED .100 CENTER	J7		7 PIN; ORIENT OMITTED PIN TO PIN 6 POSITION
1		1		1		1		1		1	95	B	903331-20	HEADER ASSY, POLARIZED .100 CENTER	J5		20 PIN; ORIENT OMITTED PIN TO PIN 19 POSITION
											96						
4		2		2		4		4		4	97	B	904150-04	SOCKET, IC LOW PROFILE 24 PIN	UA3, UD7, UD11, UD12		SEE NOTE [8]
1		1		1		1		1		1	98	B	904150-06	SOCKET, IC LOW PROFILE 40 PIN	UB14		
1		1		1		1		1		1	99		904150-01	SOCKET IC LOW PROFILE 14 PIN	UF1		
2		2		2		2		2		2	100	B	901151-17	COIL, INDUCTOR 2.2uh	L1, L2		
1		1		1		1		1		1	101	B	320086-02	BUS WIRE			
											102						
4		4		4		4		4		4	103	B	906403-19	RIVET, DOME HEAD, OPEN END			
2		2		2		2		2		2	104	B	906404-04	RIVET, DOME HEAD, CLOSED END			
											105						
1		1		1		1		1		1	106	B	903780-01	#30 WIRE WRAP WIRE, RED			
20		20		20		19		20		20	107	B	903781-01	22 AWG BARE WIRE ON TAPE & REEL			
-		1/2		1/2		-		-		-	108	B	903755-03	WIRE, INSULATED, 22 AWG, 12.5 LG			
1		1		1		1		1		1	109	B	320268-01	HEAT SINK			
A/R		A/R		A/R		A/R		A/R		A/R	110	B	904907-01	HEAT SINK, COMPOUND THERMAL			
											111						

commodore

TITLE: PCB ASSY-UNIV. DYNAMIC PET

DRWN BY: DATE 3-11-81
CHKD: DATE 6-11-81
ENGR: DATE
APPR:

SIZE B | 8032090 | REV H | SHT 4/7

QUANTITY REQD PER PART / DASH NO.											ITEM	DS	PART NUMBER	DESCRIPTION	REF DES	BEND	NOTES
11	-10	09	08	07	-06	-05	-04	-03	-02	-01							
-		11		11		-		-		11	112	B	901521-13	IC, 74LS244	UB4-UB7, UB9, UB10, UD13, UD14, UE8-UE10		
9		-		-		9		9		-	113	B	901521-13	, 74LS244	UB4, UB5, UB9, UB10, UD13, UD14, UE8-UE10		
-		2		2		-		-		2	114	B	901521-29	, 74LS373	UB3, UB8		
1		-		-		1		1		-	115	B	901521-29	, 74LS373	UB3		
-		4		4		-		-		4	116	B	901453-02	, 2114	UC4-UC7		
2		-		-		2		2		-	117	B	901453-02	, 2114	UC4, UC5		
16		16		16		-		16		16	118	B	901470-01	, 4116	UA4-UA19		
-		-		-		8		-		-	119	B	901470-01	, 4116	UA5, UA7, UA9, UA11, UA13, UA15, UA17, UA19		
-		1		1		-		-		1	120	B	901474-03	, 2316	UD7		
-		-		-		-		-		-					UD7		
-		-		-		1		1		-	122	B	901499-01	, 2316	UD7		
-		-		-		-		-		-					UD7		
1		-		-		-		-		-	124	B	970150-07	IC, 2516 EPROM	UD7		
											125						
28		28		28		28		28		28	126	B	903025-01	FERRITE BEAD	FB1-26, 28, 29		
1		1		1		1		1		1	127	B	4022048-01	SHIELD BOX			
1		1		1		1		1		1	128	B	4022047-01	SHIELD CAP			
											129						
1		1		1		1		1		1	130	B	900461-22	CAP, CERAMIC AXIAL, .033 μF, 50V	C94		
1		1		1		1		1		1	131	B	900461-24	CAP, CERAMIC AXIAL, .047 μF, 50V	C93		
1		1		1		1		1		1	132	B	900463-04	CAP, CERAMIC AXIAL, 100 PF, 50V	C91		
											133						
											134						
											135						
											136						
											137						
											138						
											139						
											140						
											141						
											142						
											143						
											144						
											145						
											146						
											147						
											148						

commodore

TITLE: PCB ASSY-UNIV. DYNAMIC PET

DRAWN BY: DATE 3-11-81
CHKD: DATE 6-17-81
ENGR: DATE
APPR:

SIZE B | 8032090 | REV H | SHT 5/7

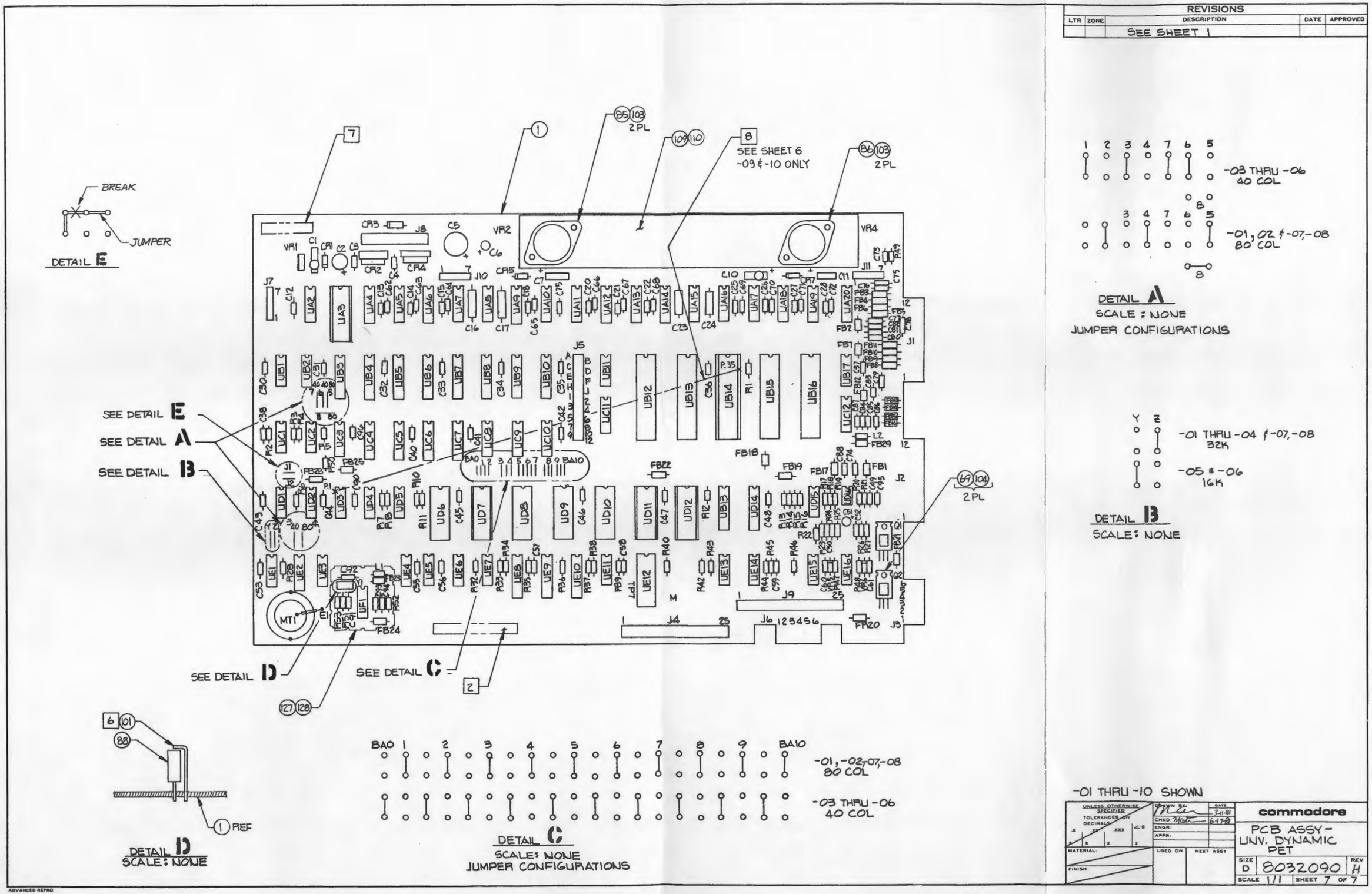

REVISIONS
LTR ZONE DESCRIPTION DATE APPROVED
SEE SHEET 1
BREAK
JUMPER
DETAIL E
SEE SHEET 6
-09 & -10 ONLY
2 PL
SEE DETAIL E
SEE DETAIL A
SEE DETAIL B
SEE DETAIL D
SEE DETAIL C
-03 THRU -06
40 COL
-01, 02 & -07, -08
80 COL
DETAIL A
SCALE : NONE
JUMPER CONFIGURATIONS
-01 THRU -04 & -07, -08
32K
-05 & -06
16K
DETAIL B
SCALE: NONE
-01, -02, -07, -08
80 COL
-03 THRU -06
40 COL
DETAIL C
SCALE: NONE
JUMPER CONFIGURATIONS
REF
DETAIL D
SCALE: NONE
-01 THRU -10 SHOWN
UNLESS OTHERWISE SPECIFIED
TOLERANCES ON DECIMALS
MATERIAL:
FINISH:
DRAWN BY:
CHKD:
ENGR:
APPR:
USED ON
NEXT ASSY
commodore
PCB ASSY - UNV. DYNAMIC PET
SIZE D
8032090
REV H
SCALE 1/1
SHEET 7 OF 7
ADVANCED REPRO

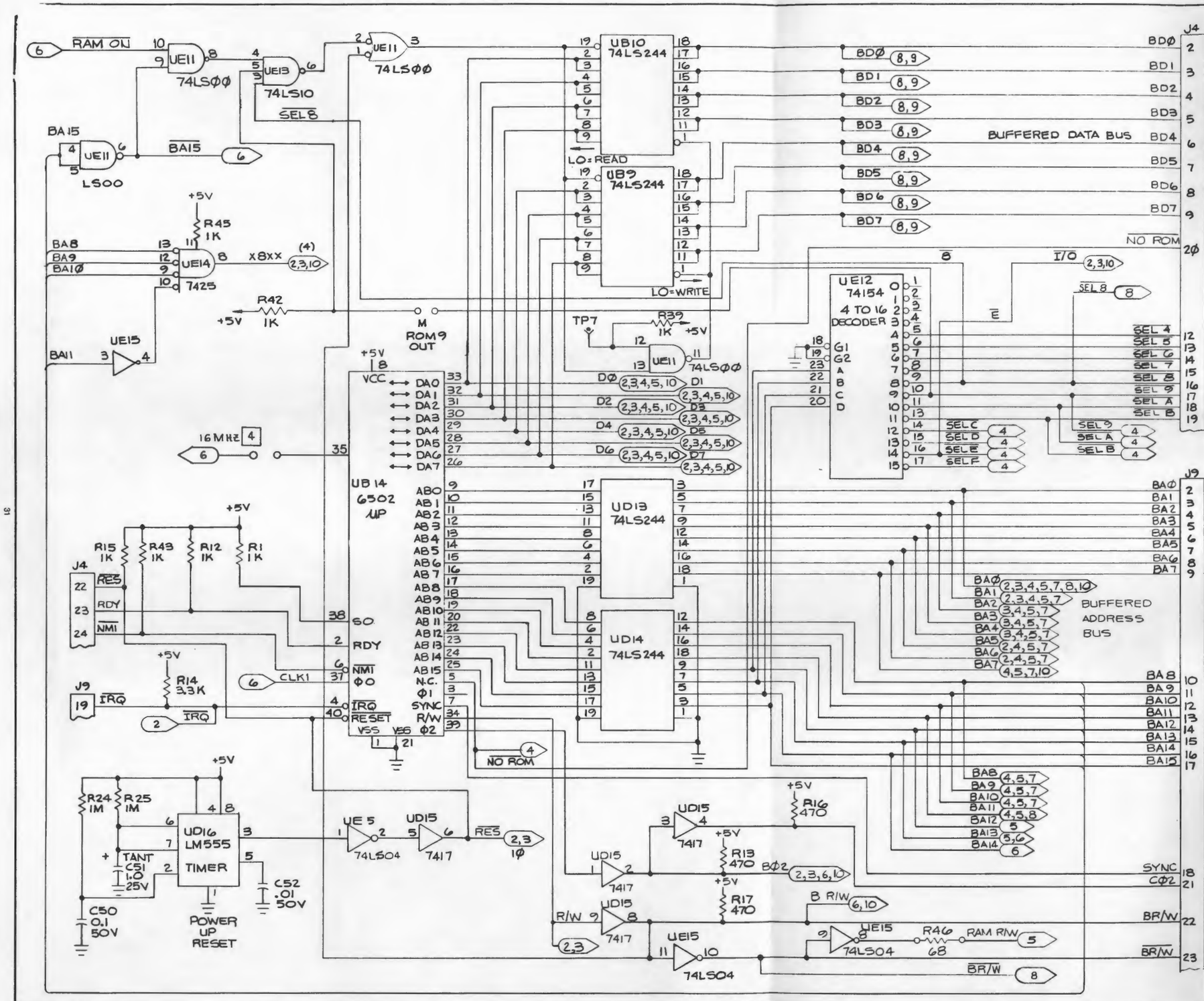

REVISIONS				
LTR	ZONE	DESCRIPTION	DATE	APPROVED
A		PRODUCTION RELEASE	3/23/81	H. Green
B		REV PER ECO 2573	3/17/82	[illegible]
C		REV PER ECO 2617	4/6/82	[illegible]

4. JUMPER FOR SUPERPET CONFIGURATION ONLY.

3 ALL CAPACITOR VALUES ARE MEASURED IN MICROPARADS.

2. ALL RESISTOR VALUES ARE IN OHMS ±5% AND ARE 1/4 WATT.

1 REFER TO ASSEMBLY DRAWING NUMBER 8032090.

NOTES-UNLESS OTHERWISE SPECIFIED

CPU & MEMORY EXPANSION

UNLESS OTHERWISE SPECIFIED TOLERANCES ON DECIMALS	DRAWN BY C. DANIELE 2-8-81		commodore
	CHK		LOGIC DIAGRAM UNVERSAL DYNAMIC PET
	ENGR H. Green 2/17/81		
MATERIAL	USED ON PET 8032	NEXT ASSY 8032090	SIZE D 8032087 REV C
FINISH			SCALE NONE SHEET 1 OF 11

BISHOP GRAPHICS/ACCUPRESS REORDER NO A 1477

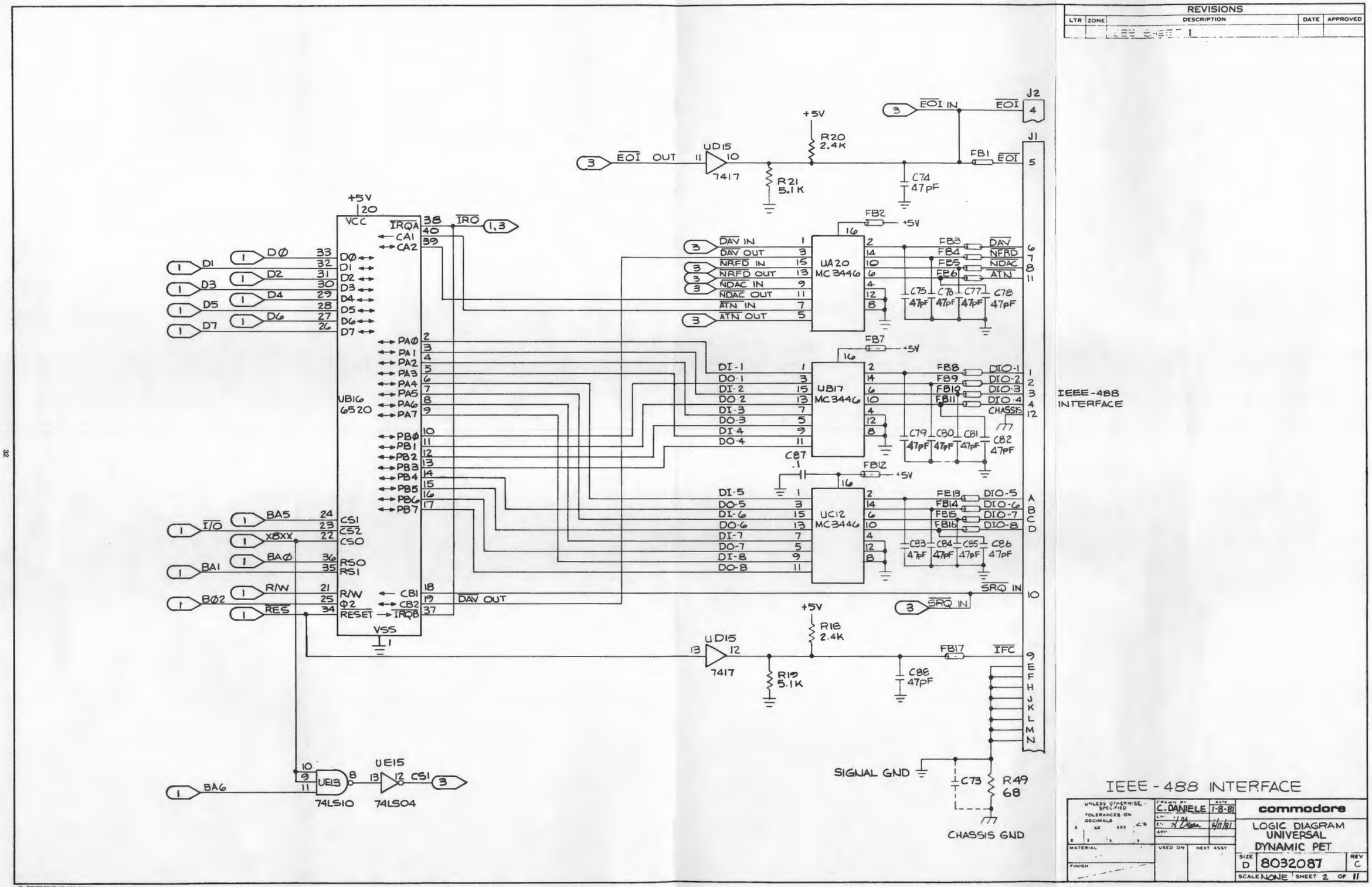
REVISIONS
LTR
ZONE
DESCRIPTION
DATE
APPROVED
IEEE-488 INTERFACE
UB16 6520
UA20 MC3446
UB17 MC3446
UC12 MC3446
UD15 7417
UE13 74LS10
UE15 74LS04
J1
J2
IEEE-488 INTERFACE
SIGNAL GND
CHASSIS GND
UNLESS OTHERWISE SPECIFIED TOLERANCES ON DECIMALS
DRAWN BY C. DANIELE
DATE 1-8-81
commodore
LOGIC DIAGRAM UNIVERSAL DYNAMIC PET
SIZE D
8032087
REV C
SCALE NONE
SHEET 2 OF 11

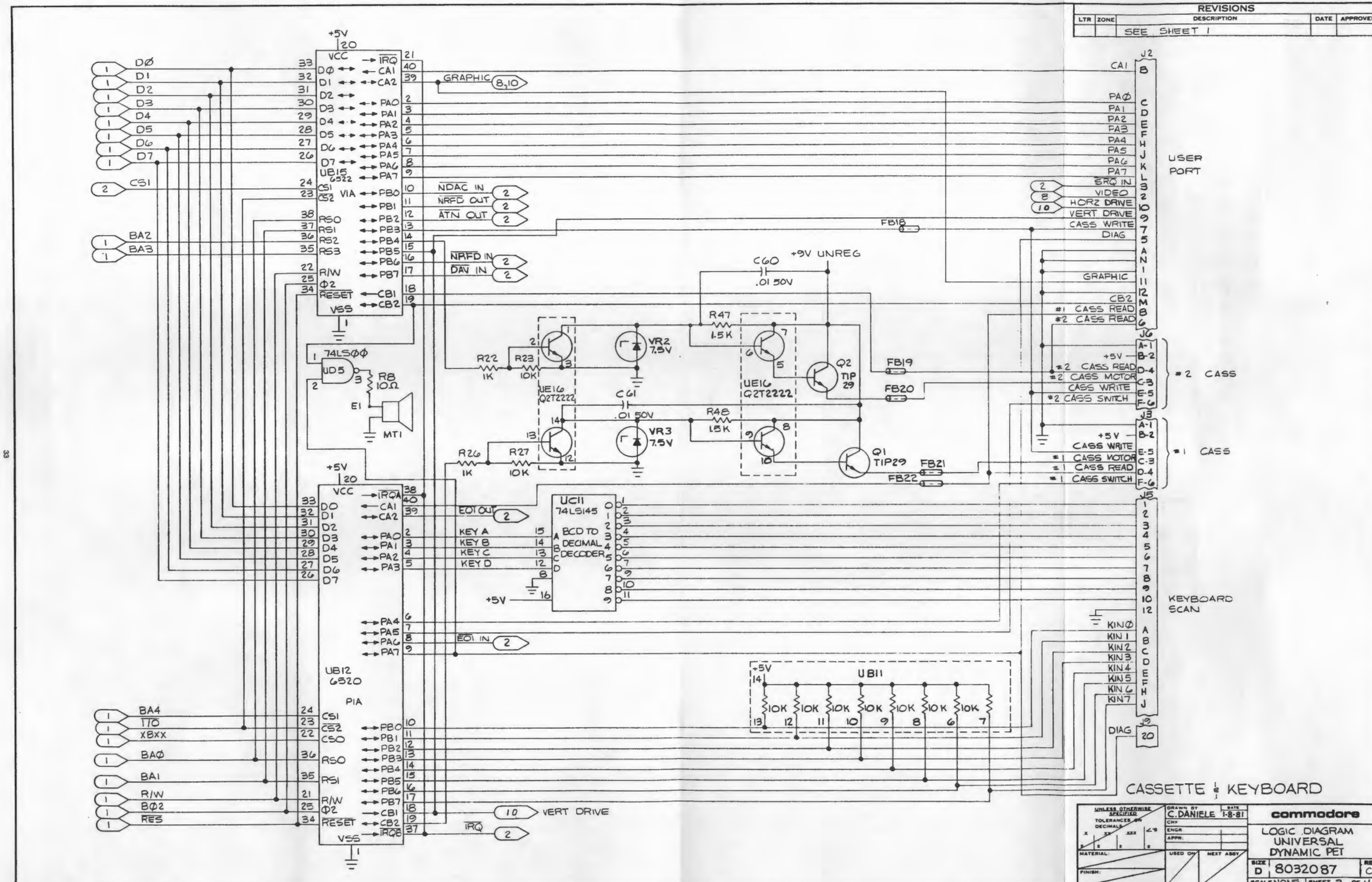
REVISIONS
LTR ZONE DESCRIPTION DATE APPROVED
SEE SHEET 1
+5V
VCC
UB15 6522
VIA
GRAPHIC 8,10
NDAC IN
NRFD OUT
ATN OUT
NRFD IN
DAV IN
74LS00
UD5
R8 10Ω
E1
MT1
UB12 6520
PIA
EOI OUT
EOI IN
KEY A
KEY B
KEY C
KEY D
UC11 74LS145
BCD TO DECIMAL DECODER
UE16 Q2T2222
VR2 7.5V
VR3 7.5V
C60 .01 50V
+9V UNREG
R47 1.5K
R48 1.5K
R22 1K
R23 10K
R26 1K
R27 10K
C61 .01 50V
Q2 TIP 29
Q1 TIP29
FB18
FB19
FB20
FB21
FB22
UB11
10K
VERT DRIVE
IRQ
J2
USER PORT
CA1
PA0
PA1
PA2
PA3
PA4
PA5
PA6
PA7
SRQ IN
VIDEO
HORZ DRIVE
VERT DRIVE
CASS WRITE
DIAG
GRAPHIC
CB2
#1 CASS READ
#2 CASS READ
J6
#2 CASS
#2 CASS READ
#2 CASS MOTOR
CASS WRITE
#2 CASS SWITCH
J3
#1 CASS
CASS WRITE
#1 CASS MOTOR
#1 CASS READ
#1 CASS SWITCH
J5
KEYBOARD SCAN
KIN0
KIN1
KIN2
KIN3
KIN4
KIN5
KIN6
KIN7
J9
DIAG
CASSETTE & KEYBOARD
UNLESS OTHERWISE SPECIFIED TOLERANCES ON DECIMALS
DRAWN BY C.DANIELE DATE 1-8-81
commodore
LOGIC DIAGRAM UNIVERSAL DYNAMIC PET
SIZE D 8032087 REV C
SCALE NONE SHEET 3 OF 11

REVISIONS				
LTR	ZONE	DESCRIPTION	DATE	APPROVED
		SEE SHEET 1		

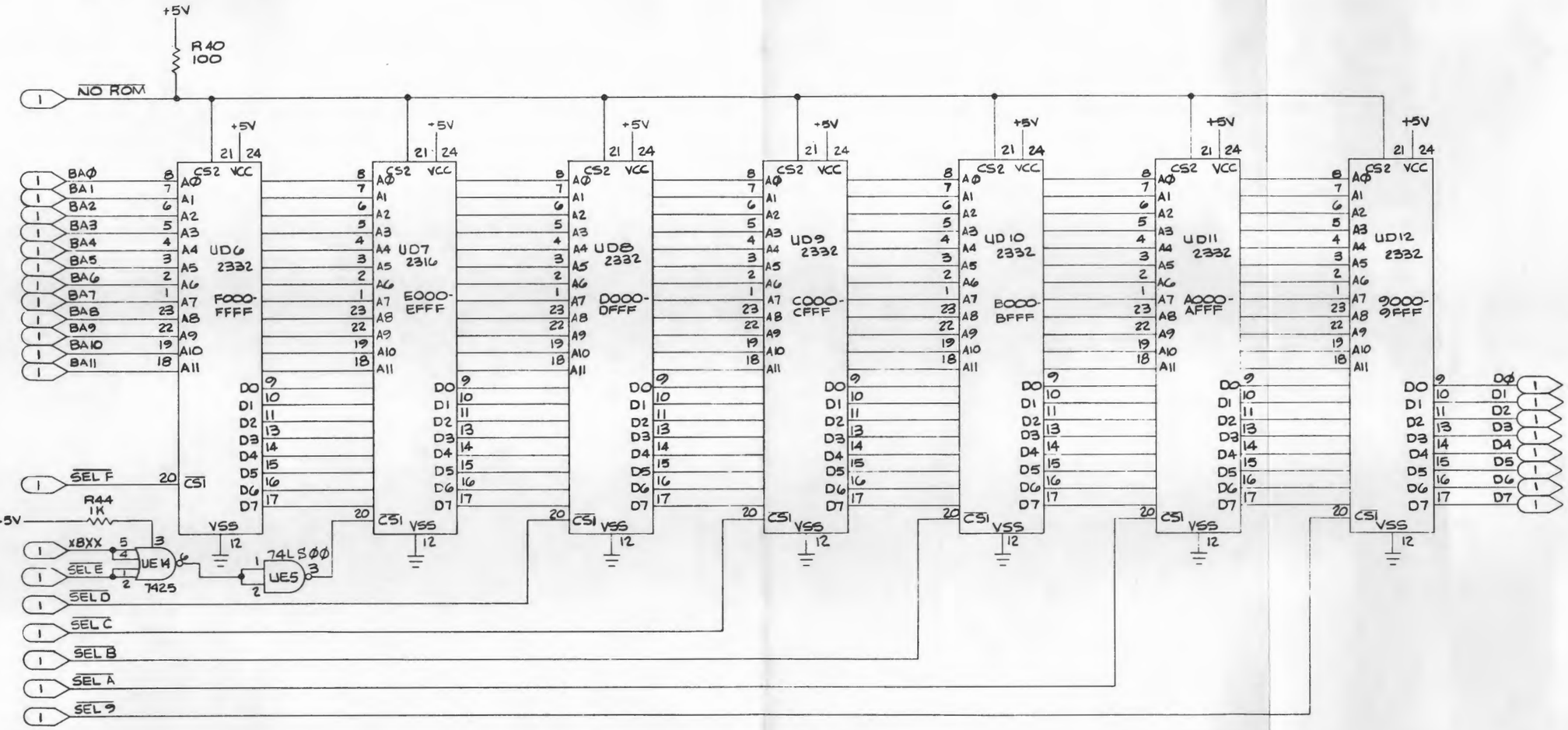

ROMS

UNLESS OTHERWISE SPECIFIED TOLERANCES ON DECIMALS	DRAWN BY C. DANIELE	DATE 1-8-81	commodore
MATERIAL	CHKD		LOGIC DIAGRAM UNIVERSAL DYNAMIC PET
FINISH	ENGR		
	APPR		
	USED ON	NEXT ASSY	SIZE D 8032087 REV C
			SCALE NONE SHEET 4 OF 11

REVISIONS				
LTR	ZONE	DESCRIPTION	DATE	APPROVED
		SEE SHEET 1		

R38 68
R37 68
R35 68
R36 68
R34 68
R33 68
R32 68

+5V
UE8 REF ADDR
74LS244
VCC 20
GND 10
G1 1
G2 19
RA1 2
RA2 4
RA3 6
RA4 8
RA5 17
RA6 15
RA7 13
CLK 1B 1
1A 18
2A 16
3A 14
4A 12
1Y 3
2Y 5
3Y 7

UE9 RAS
74LS244
BAØ 2
BA1 4
BA2 6
BA3 8
BA4 17
BA5 15
BA6 13
1A 18
2A 16
3A 14
4A 12
1Y 3
2Y 5
3Y 7
G1 1
G2 19

UE5
74LSØØ
UE4
74SØ4

UE10 CAS
74LS244
BA7 2
BA8 4
BA9 6
BAIØ 8
BA11 17
BA12 15
BA13 13
MUX A

RAM R/W
RASØ
CASI
CASØ

UA4 UPPER RAM BLOCK
UA5 LOWER RAM BLOCK
FAØ 5
FA1 7
FA2 6
FA3 12
FA4 11
FA5 10
FA6 13
AØ A1 A2 A3 A4 A5 A6
WE
RAS
CAS
DI DO
VDD VCC VBB VSS

UA6 UA7 UA8 UA9 UA10 UA11 UA12 UA13 UA14 UA15 UA16 UA17 UA18 UA19

D4 D5 D6 D7
DØ DI D2 D3

-5V +5V +12V

MAIN RAM

UNLESS OTHERWISE SPECIFIED TOLERANCES ON DECIMALS .X .XX .XXX ∠3	DRAWN BY: C.DANIELE	DATE 1-8-81	commodore
	CHKD		LOGIC DIAGRAM UNIVERSAL DYNAMIC PET
MATERIAL:	ENGR:		
FINISH:	APPR:		SIZE D 8032087 REV C
USED ON	NEXT ASSY		SCALE NONE SHEET 5 OF 11

© BISHOP GRAPHICS/ACCUPRESS REORDER NO. A-1477

REVISIONS				
LTR	ZONE	DESCRIPTION	DATE	APPROVED
		SEE SHEET 1		

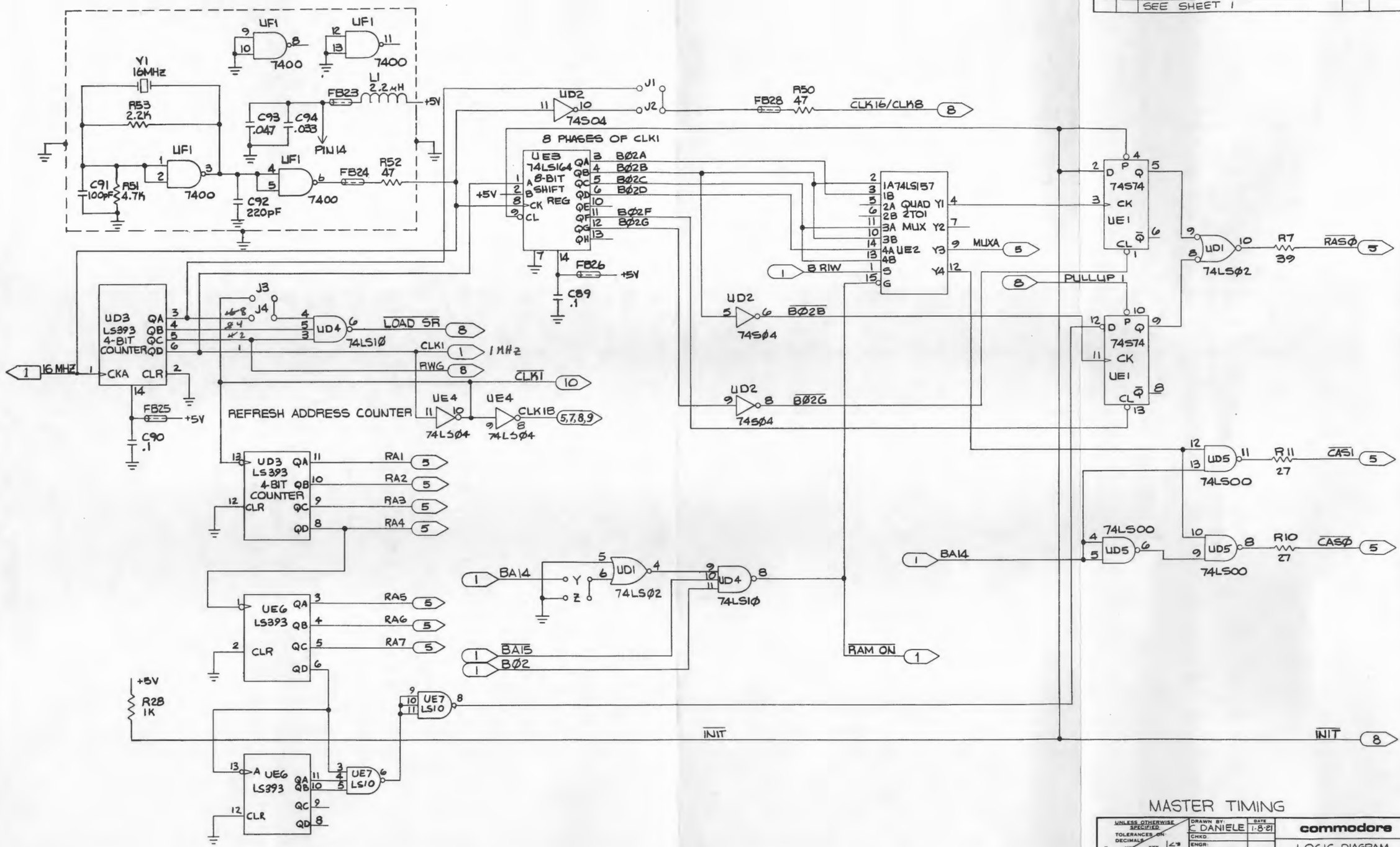

MASTER TIMING

UNLESS OTHERWISE SPECIFIED TOLERANCES ON DECIMALS .X .XX .XXX ∠°	DRAWN BY: C DANIELE	DATE: 1-8-81	commodore
	CHKD:		LOGIC DIAGRAM UNIVERSAL DYNAMIC PET
	ENGR:		
	APPR:		
MATERIAL:	USED ON	NEXT ASSY	SIZE D 8032087 REV C
FINISH:			SCALE NONE SHEET 6 OF 11

BISHOP GRAPHICS/ACCUPRESS REORDER NO. A-1477

REVISIONS				
LTR	ZONE	DESCRIPTION	DATE	APPROVED
		SEE SHEET 1		

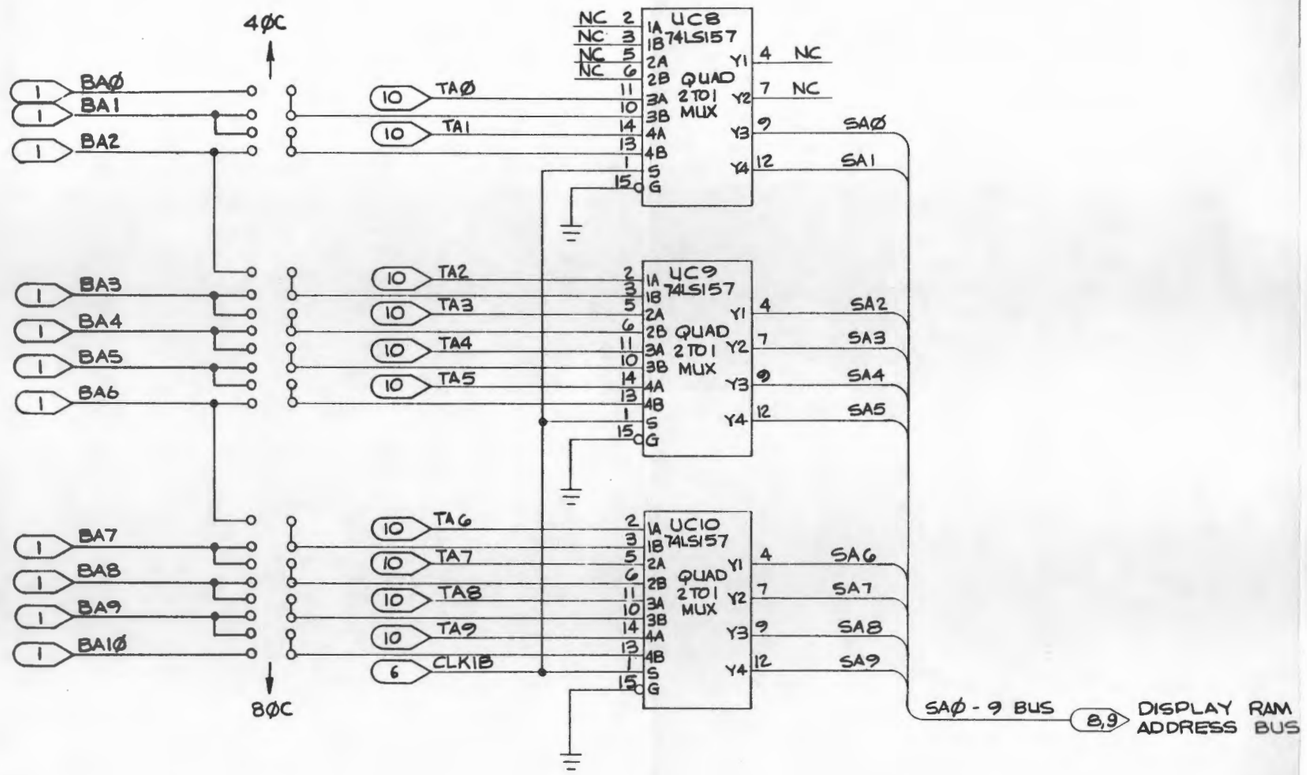

DISPLAY ADDRESS MUX

UNLESS OTHERWISE SPECIFIED TOLERANCES ON DECIMALS .X ±.1 .XX ±.03 .XXX ±.010 ∠ ±2°	DRAWN BY C.DANIELE	DATE 1-8-81	commodore
	CHKD		LOGIC DIAGRAM UNIVERSAL DYNAMIC PET
	ENGR		
	APPR		
MATERIAL:	USED ON	NEXT ASSY	SIZE D 8032087 REV C
FINISH:			SCALE NONE SHEET 7 OF 11

BISHOP GRAPHICS/ACCUPRESS REORDER NO. A-1277

REVISIONS				
LTR	ZONE	DESCRIPTION	DATE	APPROVED
		SEE SHEET 1		

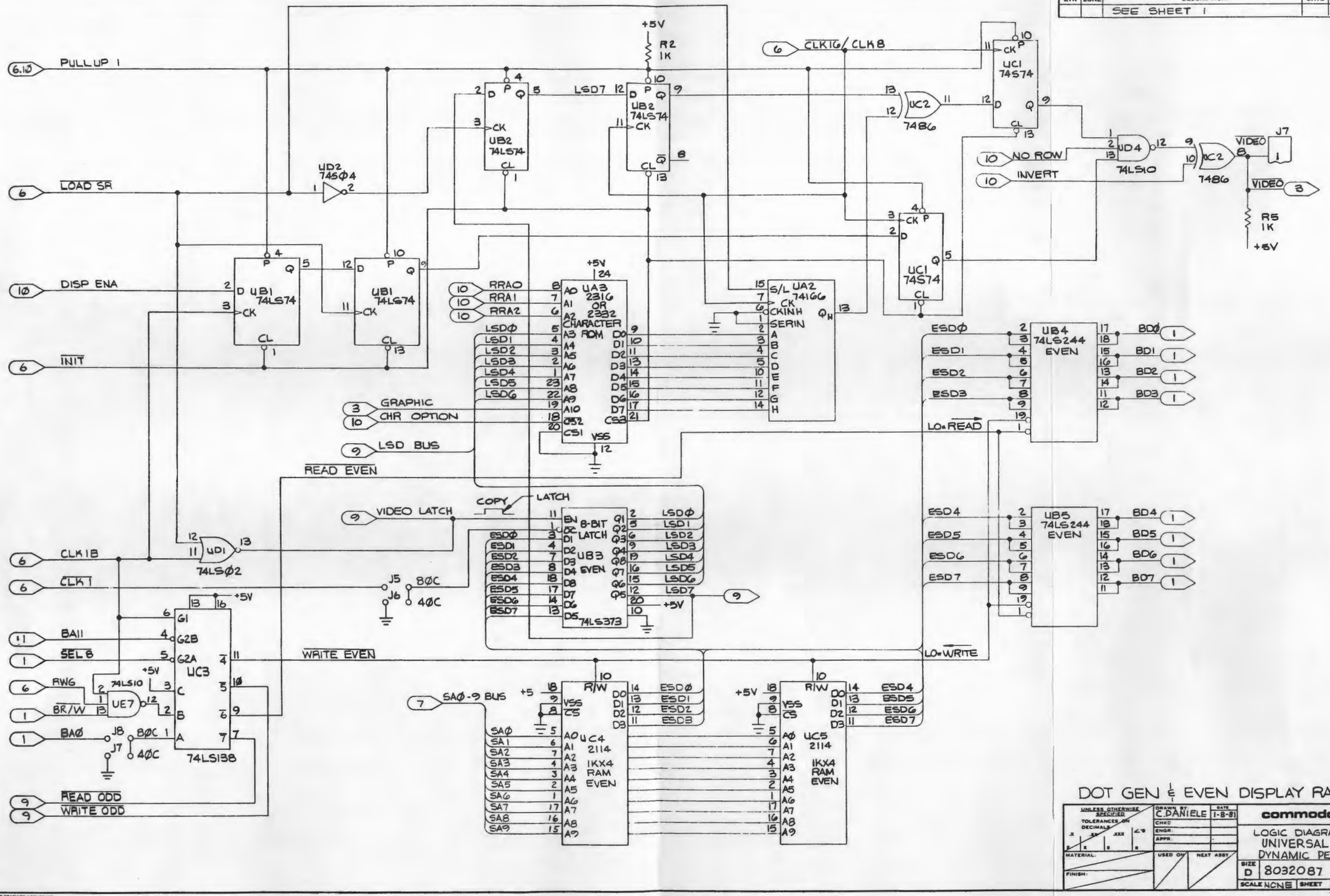

DOT GEN & EVEN DISPLAY RAMS

UNLESS OTHERWISE SPECIFIED TOLERANCES ON DECIMALS X .XX .XXX ∠°	DRAWN BY C.DANIELE	DATE 1-8-81	commodore
	CHK'D		LOGIC DIAGRAM UNIVERSAL DYNAMIC PET
MATERIAL:	ENGR:		
FINISH:	APPR:	USED ON / NEXT ASSY	SIZE D 8032087 REV C
			SCALE NONE SHEET 8 OF 11

BISHOP GRAPHICS/ACCUPRESS REORDER NO. A-1477

REVISIONS				
LTR	ZONE	DESCRIPTION	DATE	APPROVED
		SEE SHEET 1		

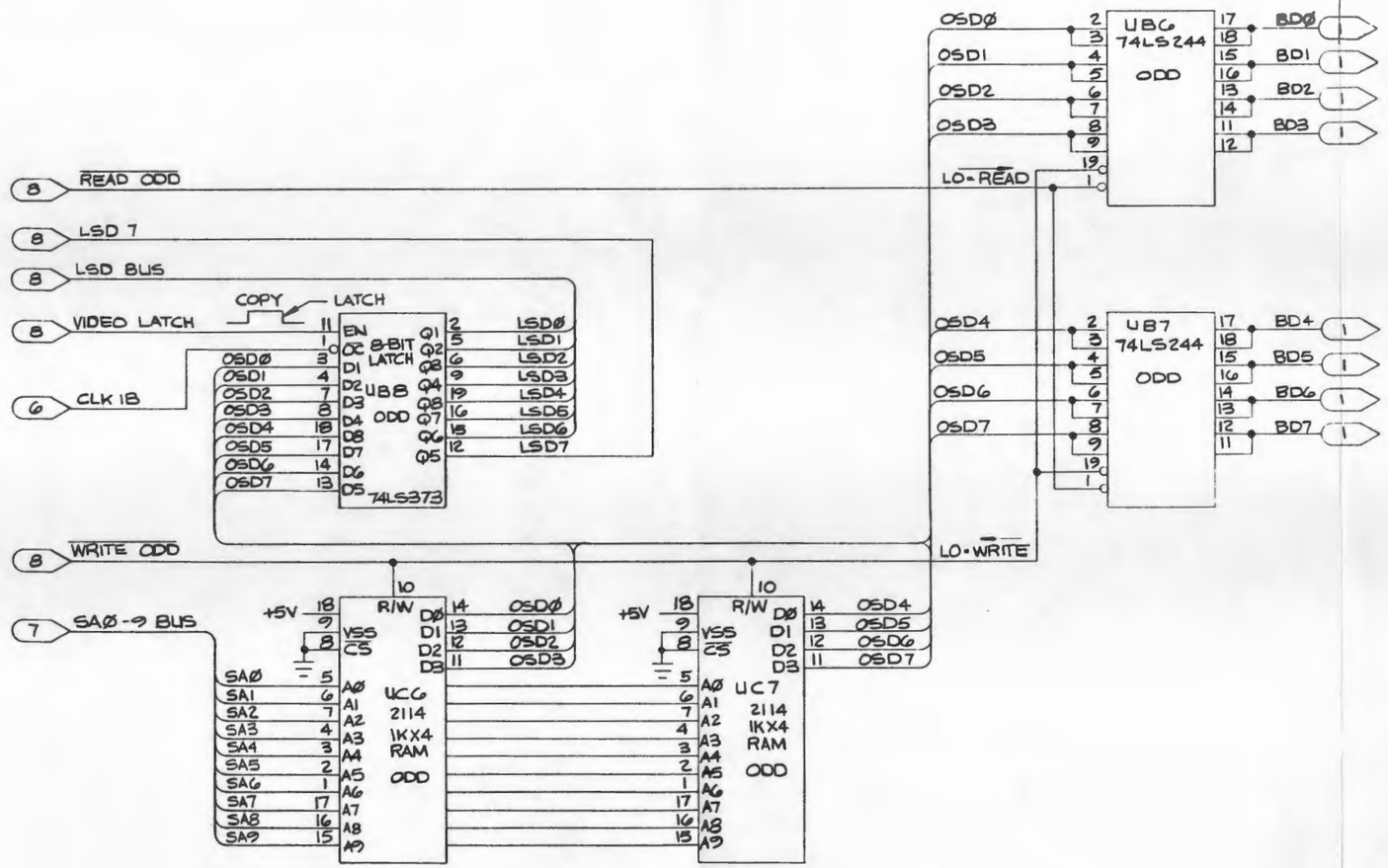

ODD DISPLAY RAMS

UNLESS OTHERWISE SPECIFIED TOLERANCES ON DECIMALS .X .XX .XXX ∠°	DRAWN BY: C.DANIELE	DATE: 1-8-81	commodore
	CHK:		LOGIC DIAGRAM UNIVERSAL DYNAMIC PET
	ENGR:		
	APPR:		
MATERIAL:	USED ON	NEXT ASSY	SIZE D 8032087 REV C
FINISH:			SCALE NONE SHEET 9 OF 11

© BISHOP GRAPHICS/ACCUPRESS REORDER NO. A-1477

REVISIONS				
LTR	ZONE	DESCRIPTION	DATE	APPROVED
		SEE SHEET 1		

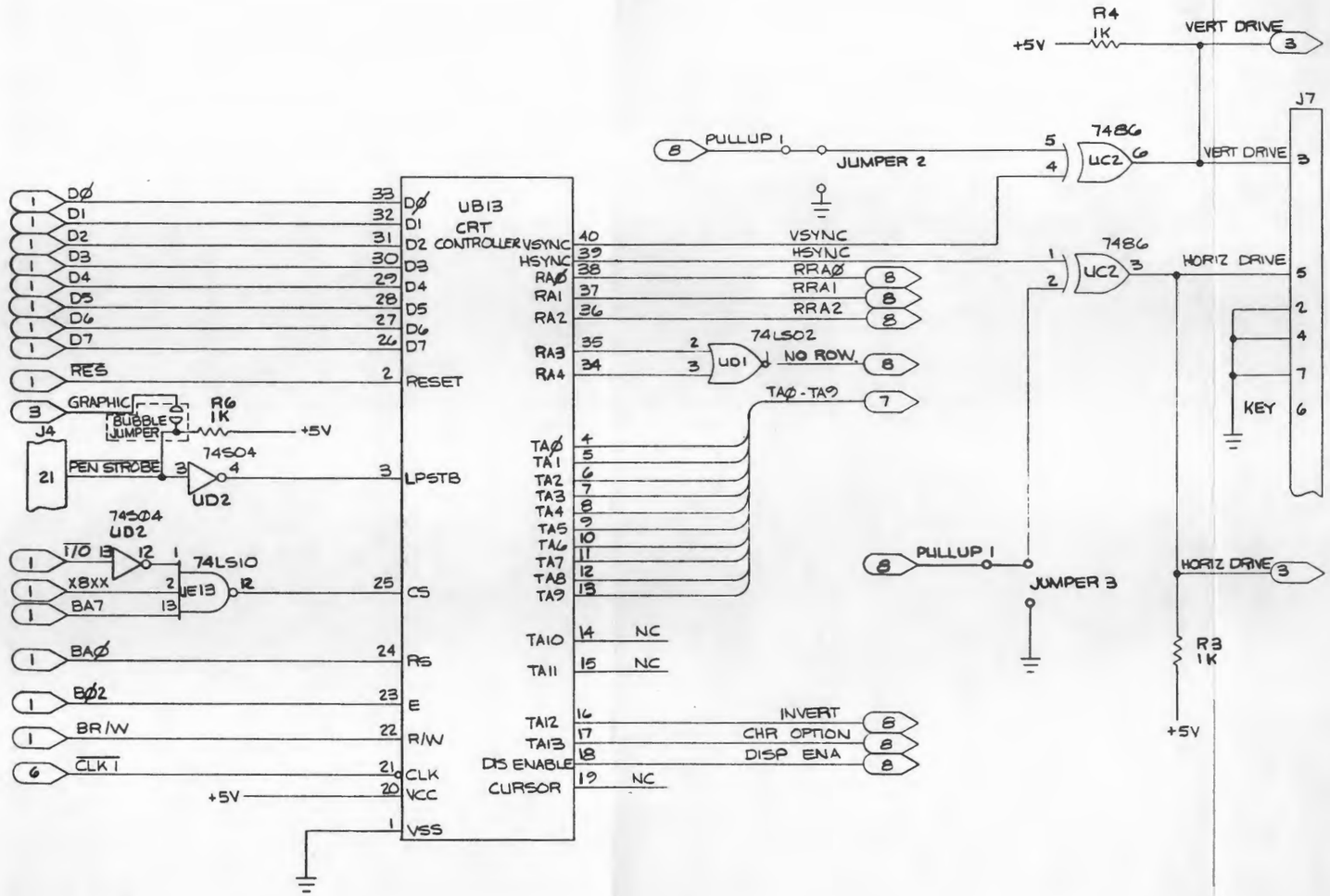

CRTC AND SYNC BUFFERS

UNLESS OTHERWISE SPECIFIED TOLERANCES ON: DECIMALS .X ±.1 .XX ±.02 .XXX ±.005 ∠ ±1°	DRAWN BY C. DANIELE	DATE 1-8-81	commodore
	CHKD		LOGIC DIAGRAM UNIVERSAL DYNAMIC PET
	ENGR:		
	APPR:		
MATERIAL:	USED ON	NEXT ASSY	SIZE D 8032087 REV C
FINISH:			SCALE NONE SHEET 15 OF 11

REVISIONS				
LTR	ZONE	DESCRIPTION	DATE	APPROVED
		SEE SHEET 1		

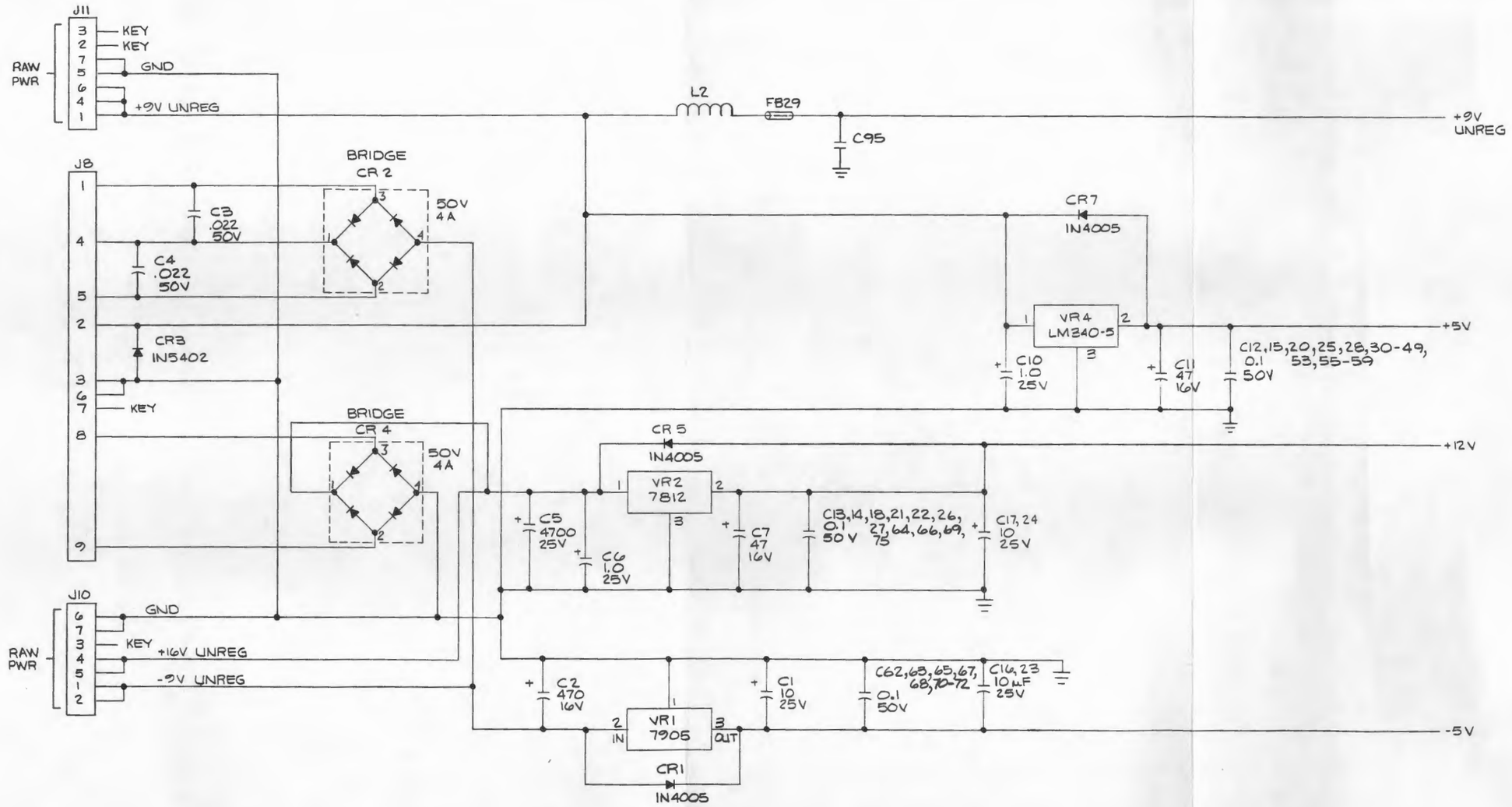

VOLTAGE REGULATOR

UNLESS OTHERWISE SPECIFIED TOLERANCES ON: DECIMALS .X ±.1 .XX ±.02 .XXX ±.005 ANGLES ±1°	DRAWN BY: C. DANIELE	DATE 2-8-82	commodore
	CHKD:		LOGIC DIAGRAM UNIVERSAL DYNAMIC PET
	ENGR:		
	APPR:		
MATERIAL:	USED ON	NEXT ASSY	SIZE D 8032087 REV C
FINISH:			SCALE NONE SHEET 11 OF 11

BISHOP GRAPHICS/ACCUPRESS REORDER NO. A-1477

PART NO.	DESCRIPTION
8032051-01	POWER SUPPLY ASSY, 8032 117V UL

REVISIONS				
LTR	ZONE	DESCRIPTION	DATE	APPROVED
A		PRODUCTION RELEASE	8/26/80	
B		REV PER ECO 1935	12/15/80	
C		REV PER ECO 2028	3/20/81	
D		REV PER ECO 2284	10/16/81	
E		REV. PER ECO 2777	4/23/82	

6 REFER TO PART SUBSTITUTE INDEX P/N 321233.

5 SWITCH SHOWN IN 'OFF" POSITION.

4. ALL LEADS WILL HAVE A MINIMUM OF ONE WRAP AROUND TERMINALS PRIOR TO SOLDERING.

3 IDENTIFY WITH COMMODORE PART NO. 8032051 AND APPLICABLE DASH NO. LOCATE APPROX AS SHOWN.

2 DASH 04 CONFIGURATION SHALL BE USED FOR VDE, SEV & SEMKO.

1. SHEET 3 OF 3 SIZE D
ASSY DWG

NOTES - UNLESS OTHERWISE SPECIFIED:

commodore	TITLE: POWER SUPPLY ASSY, 8032	DRAWN BY: K CHRISTENSEN	DATE 4/22/80	ENGR:		SIZE B	DRAWING NUMBER 8032051	
		CHKD: FORMAT N.P. CHK ONLY	8-19-80	APPR:			SHEET 1 OF 3	

BISHOP GRAPHICS/ACCUPRESS
REORDER NO. A-7849

QUANTITY REQD PER PART / DASH NO. 01	ITEM	DS	PART NUMBER	DESCRIPTION	REF DES	BEND	NOTES
	1						
1	2	D	8032043-02	CHASSIS, POWER, UNIVERSAL			
1	3	C	320902-01	TRANSFORMER	T1		SEE NOTE [6] FOR SUBSTITUTE
	4						
	6						
1	7	B	900102-01	CAPACITOR 23,000 MFD	C1		
	8						
1	9	B	903467-03	FILTER POWER CONNECTOR			
	11						
	12						
	13						
1	14	B	320289-01	DYNAMIC PET POWER HARNESS			
	15						
1	16	B	903557-04	FUSE, 125V SLO-BLO 1.6A	F1		
	18						
	19						
1	20	B	903611-03	FUSE HOLDER	XF1		FOR SUBSTITUTE SEE NOTE [6]
1	21	B	904507-01	SWITCH, ROCKER	SW1		
	22						
	23						
	24						
5	25	B	320479-02	TUBE, SHRINKABLE			
3	26	B	320478-01	TUBE, SHRINKABLE			
2	27	B	320059-01	LEAD WIRE (BLACK)			
	28						
1	30	B	903612-02	FUSECARRIER			FOR SUBSTITUTE SEE NOTE [6]
2	31	B	906630-03	SCREW, PAN HEAD, #10-32 x .250 LG			
2	32	B	905650-03	WASHER, LOCK, INT TOOTH #10			
	33						
1	34	C	320925-05	GROUND CABLE ASSY			
2	35	B	906600-06	SCREW PAN HEAD #4-40 x .438 LG			
2	36	B	905970-05	NUT KEPS #4-40			
	37						

commodore

TITLE: POWER SUPPLY ASSY, 8032

DRWN BY: K. CHRISTENSEN DATE 4/22/80
CHKD: N.P. 9-19-80
ENGR: DATE
APPR:

SIZE B | 8032051 | REV E | SHT 2/3

REVISIONS				
LTR	ZONE	DESCRIPTION	DATE	APPROVED
		SEE SHEET 1		

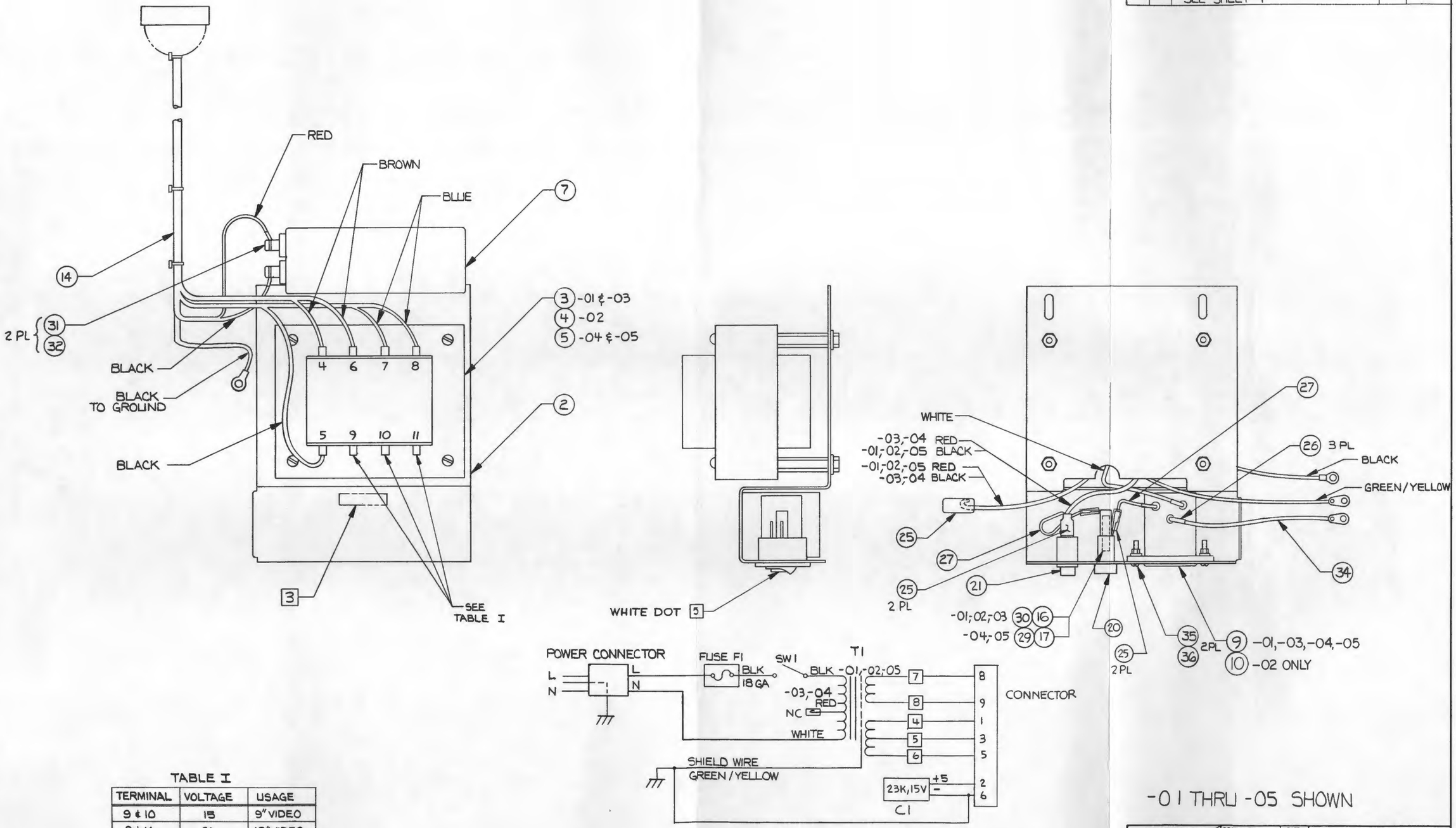

WIRING DIAGRAM

TABLE I

TERMINAL	VOLTAGE	USAGE
9 & 10	15	9" VIDEO
9 & 11	21	12" VIDEO

-01 THRU -05 SHOWN

UNLESS OTHERWISE SPECIFIED TOLERANCES ON DECIMALS .X ± .XX ± .XXX ± ∠'S ±	DRAWN BY: K. CHRISTENSEN	DATE 4/22/80	commodore
	CHKD: N.P.	8-19-80	POWER SUPPLY ASSY, 8032
	ENGR:		
	APPR:		
MATERIAL:	USED ON: PET 8032 8016	NEXT ASSY: 8032008 8016002	SIZE D 8032051 REV E
FINISH:			SCALE NONE SHEET 3 OF 3

ADVANCED REPRO

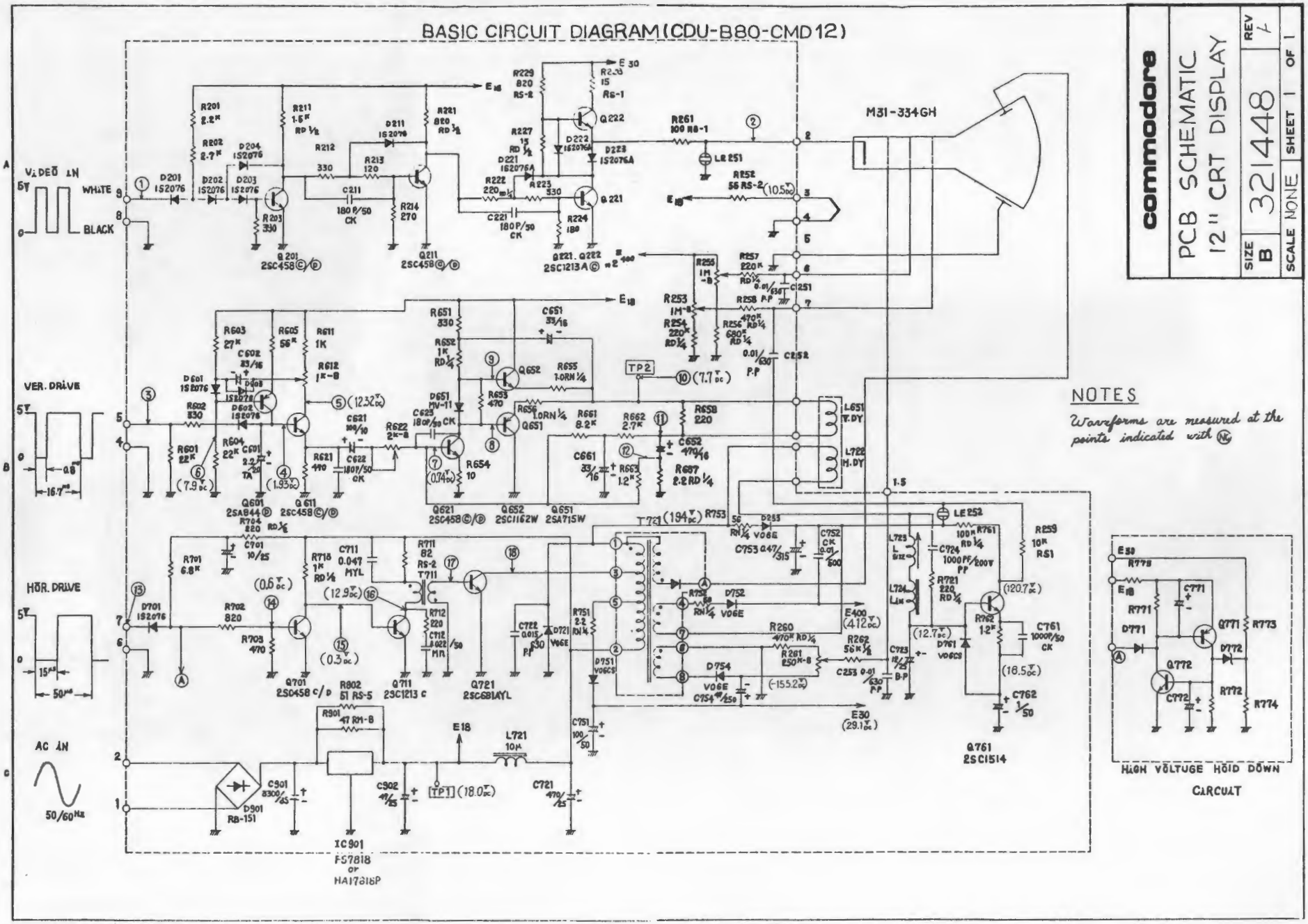
BASIC CIRCUIT DIAGRAM (CDU-B80-CMD12)
commodore
PCB SCHEMATIC
12" CRT DISPLAY
SIZE B
321448
REV L
SCALE NONE
SHEET 1 OF 1
M31-334GH
VIDEO IN
WHITE
BLACK
VER. DRIVE
HOR. DRIVE
AC IN
50/60Hz
NOTES
Waveforms are measured at the points indicated with
HIGH VOLTAGE HOLD DOWN CIRCUIT
IC901
FS7818
or
HA17818P
Q761
2SC1514

321450

REVISIONS				
LTR	ZONE	DESCRIPTION	DATE	APPROVED
A		PRODUCTION RELEASE	12/29/80	

THE INFORMATION AND DATA CONTAINED HEREIN IS PROPIETARY AND SHALL NOT BE USED OR DUPLICATED WITHOUT PERMISSION OF COMMODORE BUSINESS MACHINES, INC.

DRAWN BY: Mauter	DATE 12-5-80	commodore
CHKD:	12/9/80	TITLE: PCB WAVEFORMS 12" CRT DISPLAY
ENGR:	12/29/80	
PROD:		SIZE A | DWG NO. 321450 | REV A
APPD:		
[illegible]:		RELEASE DATE | SHEET 1 OF 10

VIDEO (1/1)

(1)

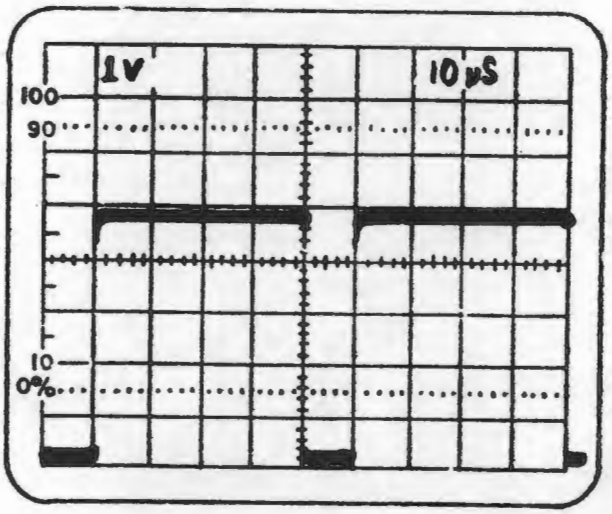

(2)

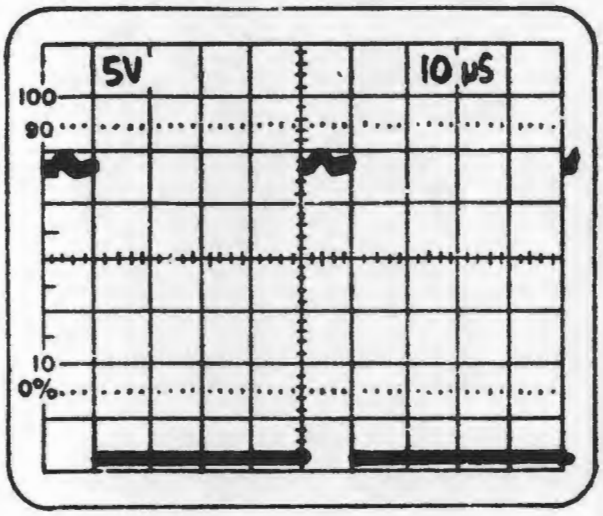

commodore		
PCB WAVEFORMS 12" CRT DISPLAY		
SIZE A	321450	REV A
SCALE NONE	SHEET 2 OF 10	

VERTICAL (1/3)

(3)

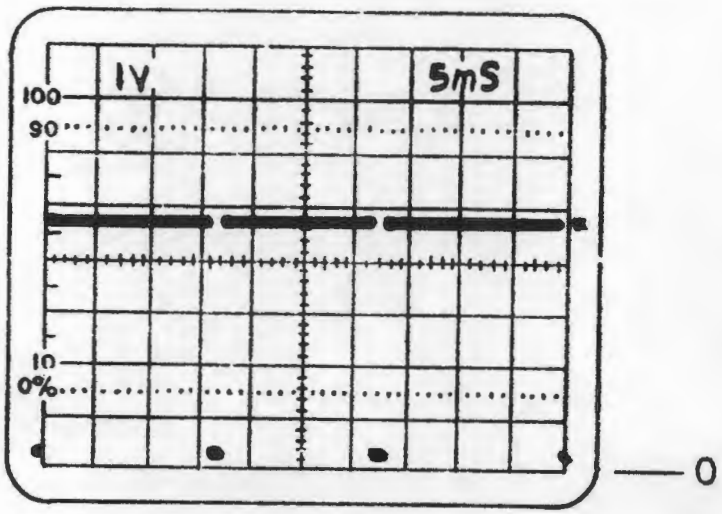

(4)

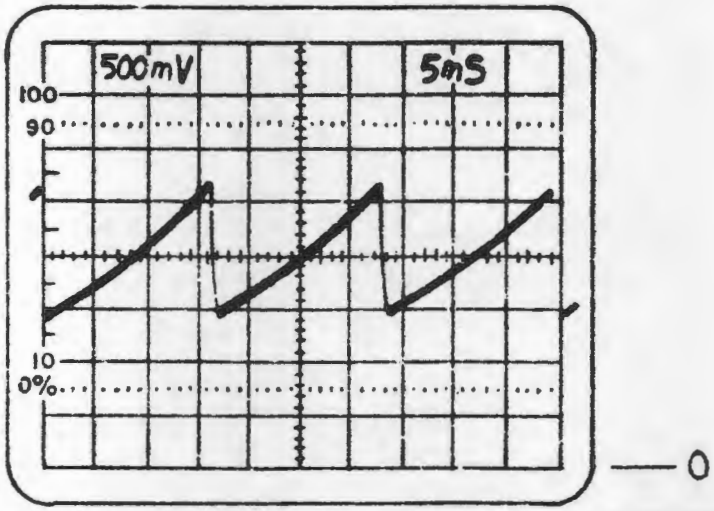

commodore		
PCB WAVEFORMS 12" CRT DISPLAY		
SIZE A	321450	REV A
SCALE NONE	SHEET 3 OF 10	

VERTICAL (1/3)

(5)

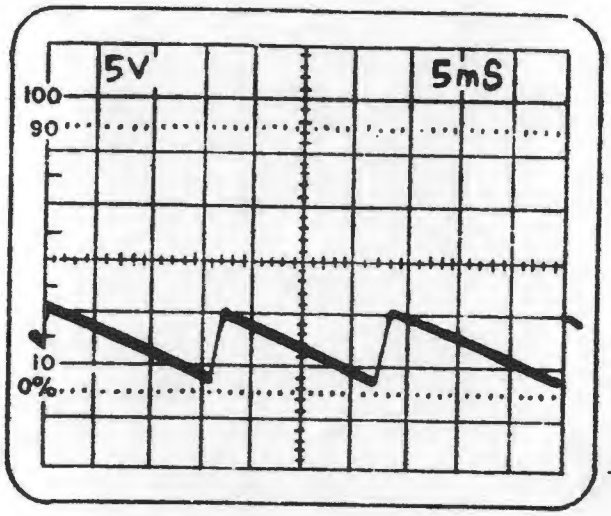

(6)

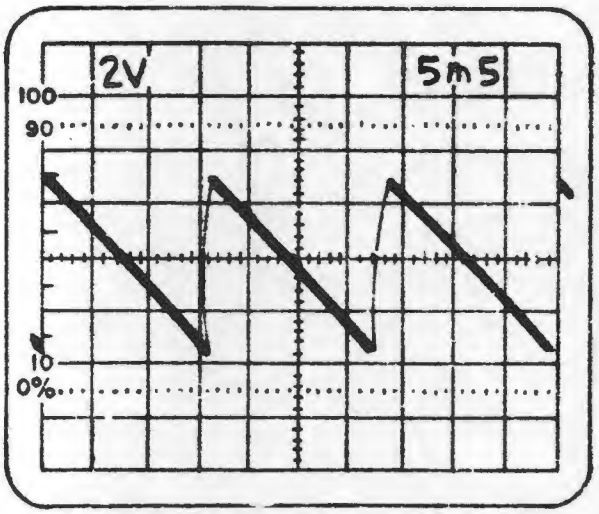

commodore		
PCB WAVEFORMS 12" CRT DISPLAY		
SIZE A	321450	REV A
SCALE NONE	SHEET 4 OF 10	

VERTICAL (2/3)

(7)

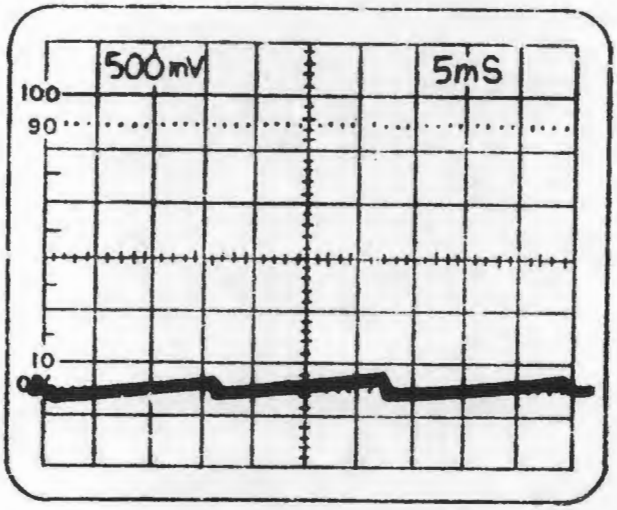

(8)

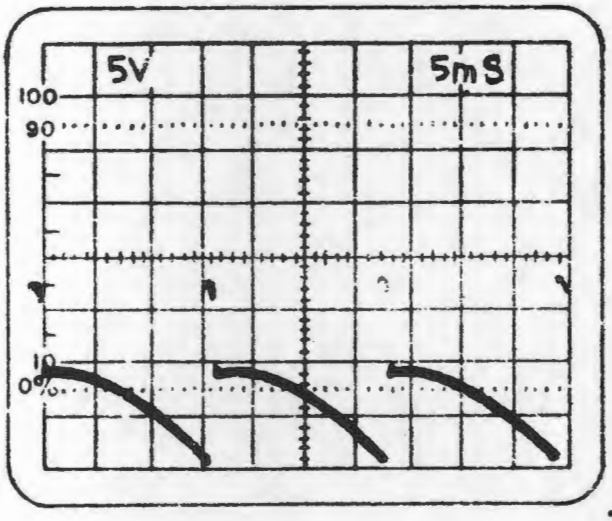

commodore		
PCB WAVEFORMS 12" CRT DISPLAY		
SIZE A	32!450	REV A
SCALE NONE	SHEET 5 OF 10	

VERTICAL (2/3)

(9)

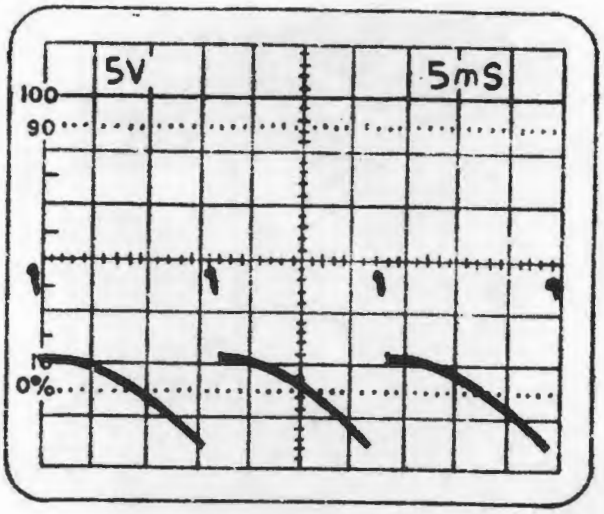

(10)

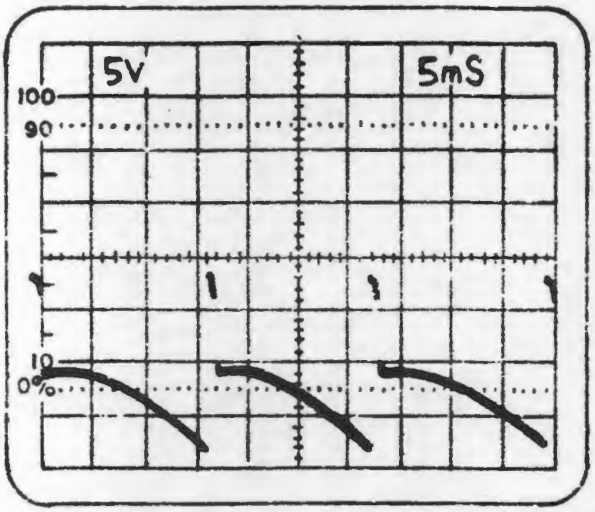

commodore		
PCB WAVEFORMS 12" CRT DISPLAY		
SIZE A	321450	REV A
SCALE NONE	SHEET 6 OF 10	

VERTICAL (3/3)

(11)

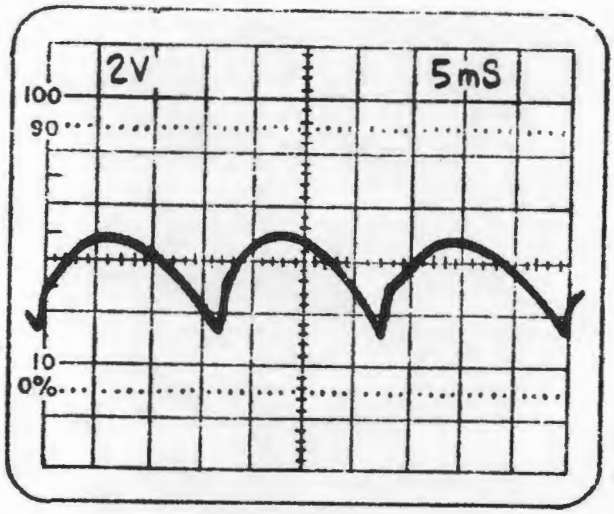

(12)

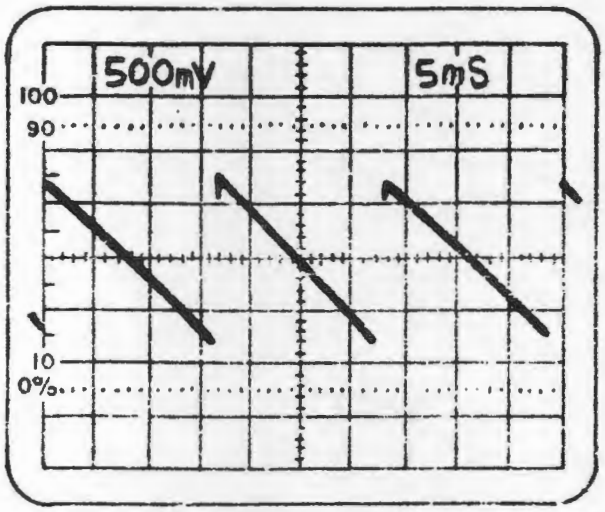

commodore		
PCB WAVEFORMS 12" CRT DISPLAY		
SIZE A	321450	REV A
SCALE NONE	SHEET 7 OF 10	

HORIZONTAL (1/2)

(13)

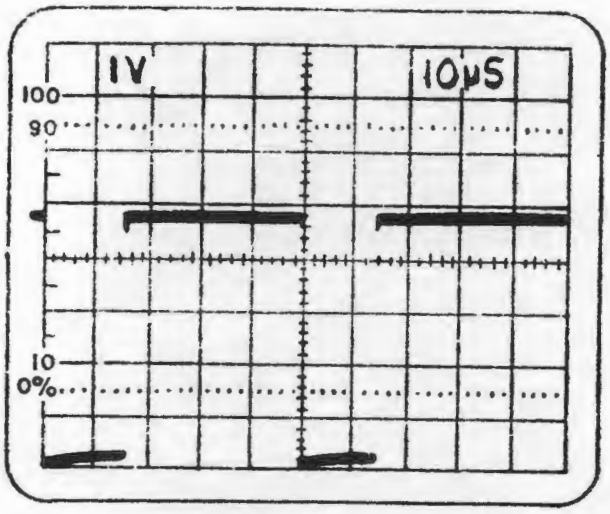

(14)

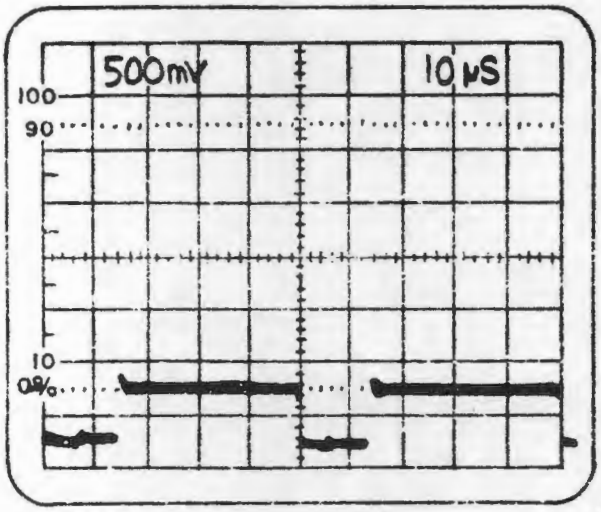

commodore		
PCB WAVEFORMS 12" CRT DISPLAY		
SIZE A	321450	REV A
SCALE NONE	SHEET 8 OF 10	

HORIZONTAL (1/2)

(15)

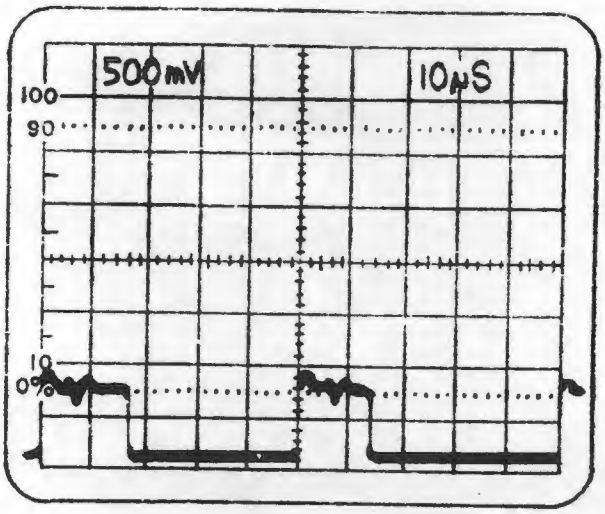

(16)

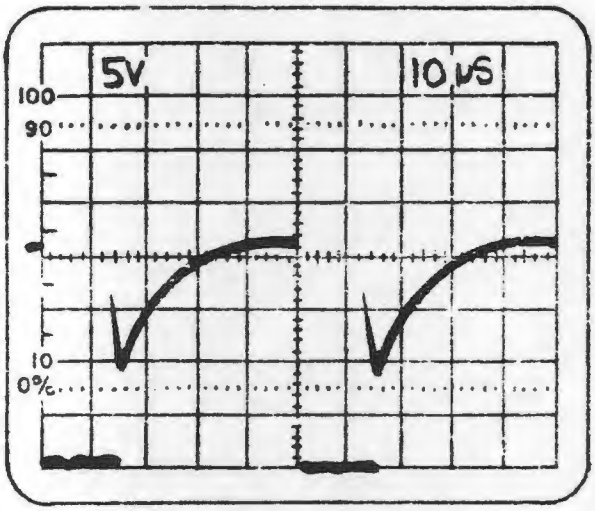

commodore		
PCB WAVEFORMS 12" CRT DISPLAY		
SIZE A	321450	REV A
SCALE NONE	SHEET 9 OF 10	

HORIZONTAL (2/2)

(17)

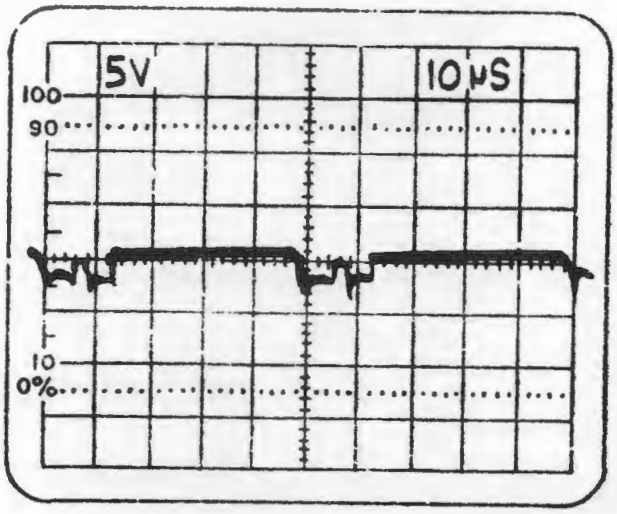

(18)

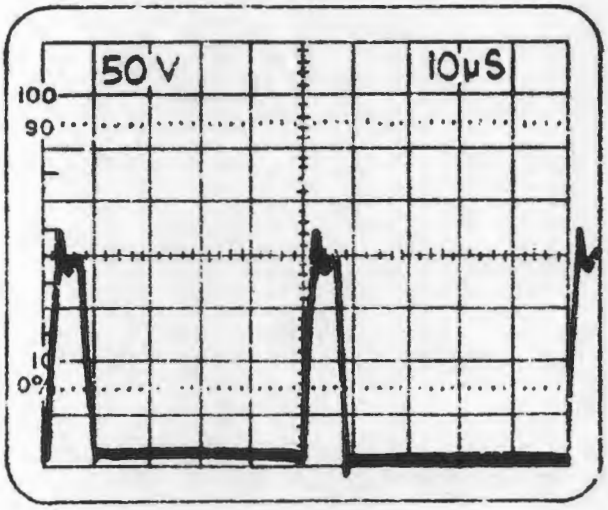

commodore		
PCB WAVEFORMS 12" CRT DISPLAY		
SIZE A	321450	REV A
SCALE NONE	SHEET 10 OF 10	