SONY

# CXD2545Q

## CD Digital Signal Processor with Built-in Digital Serv

### Description

The CXD2545Q is a digital signal processor IC wit a built-in digital servo for CD players. This IC is broadly divided into a digital signal processor bloc and a digital servo block, and these blocks possess the following functions.

### Digital Signal Processor Block

- Wide frame jitter margin (±28 frames) due to a built-in 32K RAM
- The bit clock, which strobes the EFM signal, is generated by the digital PLL.
- Enhanced EFM frame sync signal protection
- Refined super strategy-based powerful error correction
  C1: double correction, C2: quadruple correction
- Quadruple-speed, double-speed and variable pitch playback
- Noise reduction during track jumps
- Auto zero-cross mute
- Subcode demodulation and Sub Q data error detection
- Digital spindle servo (with oversampling filter)
- Asymmetry compensation circuit
- Error correction monitor signal, etc. output from a new CPU interface
- Servo auto sequencer
- Fine search performs track jumps with high accuracy
- Digital level meter, peak meter
- Bilingual compatible

### Digital Servo Block

- Microcomputer software-based flexible servo control
- Servo error signal, offset cancel function
- Servo loop, auto gain control function
- E:F balance, focus bias adjustment function

### Features

- All digital signals produced during playback processed with a single chip
- Allows highly integrated chip mounting by incorporating the RAM and digital servo on-chip

### Absolute Maximum Ratings

| | | | |
|---|---|---|---|
| • Supply voltage | $V_{DD}$ | −0.3 to 7.0 | V |
| • Input voltage | $V_I$ | −0.3 to +7.0 | V |
| | | ($V_{SS}$ −0.3V to $V_{DD}$ +0.3V) | |
| • Output voltage | $V_O$ | −0.3 to +7.0 | V |
| • Storage temperature | $T_{stg}$ | −40 to +125 | °C |
| • Supply voltage difference | | | |
| | $V_{SS}$ − $AV_{SS}$ | −0.3 to +0.3 | V |
| | $V_{DD}$ − $AV_{DD}$ | −0.3 to +0.3 | V |

100 pin QFP (Plastic)

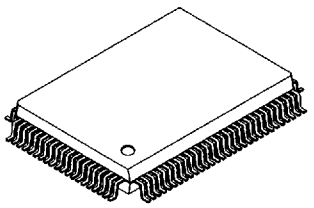

### Recommended Operating Conditions

| | | | |
|---|---|---|---|
| • Supply voltage | $V_{DD}$* | 4.50 to 5.50 | V |
| • Operating temperature | Topr | −20 to +75 | °C |

* The $V_{DD}$ (min.) for the CXD2545Q varies according to the playback speed and built-in VCO selection. The $V_{DD}$ (min.) is 4.50V when high-speed VCO and quadruple-speed playback are selected (variable pitch off). The $V_{DD}$ (min.) for the CXD2545Q under various conditions are as shown in the following table.

| Playback speed | $V_{DD}$ (min.) [V] | |
|---|---|---|
| | VCO high speed | VCO normal speed |
| × 4 | 4.50 | — |
| × 2*1 | 4.00 | — |
| × 2 | 3.40 | 4.00 |
| × 1 | 3.40 | 3.40 |
| × 1*2 | 3.40 | 3.40 |

Dashes indicate that there is no assurance of the processor operating. All values are for variable pitc off.

*1 When the internal operation of the LSI is set to normal-speed playback and the operating clock of the signal processor is doubled, double-speed playback results.

*2 When the internal operation of the LSI is set to double-speed mode and the crystal oscillating frequency is halved in low power consumption mode, normal-speed playback results.

### I/O Capacitance

| | | | |
|---|---|---|---|
| • Input capacitance | $C_I$ | 12 (max.) | pF |
| • Output capacitance | $C_O$ | 12 (max.) | pF |
| | | When at high impedance | |

**Note)** Measurement conditions $V_{DD} = V_I = 0V$, $f_M = 1MHz$

Sony reserves the right to change products and specifications without prior notice. This information does not convey any license by any implication or otherwise under any patents or other right. Application circuits shown, if any, are typical examples illustrating th operation of the devices. Sony cannot assume responsibility for any problems arising out of the use of these circuits.



E95134A6X-PS

8382383 0015318 258

## Block Diagram

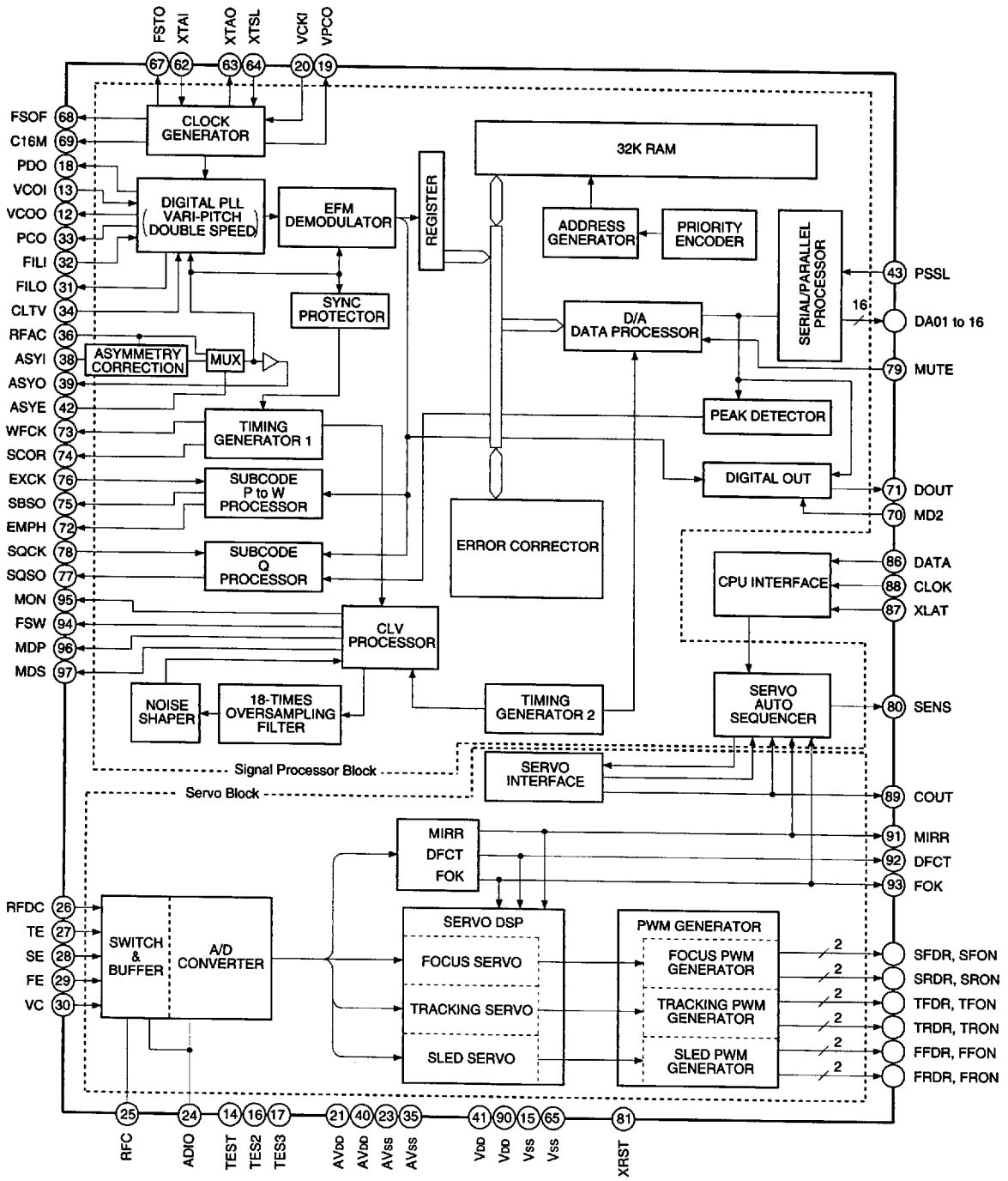




8382383 0015319 194

## Pin Configuration

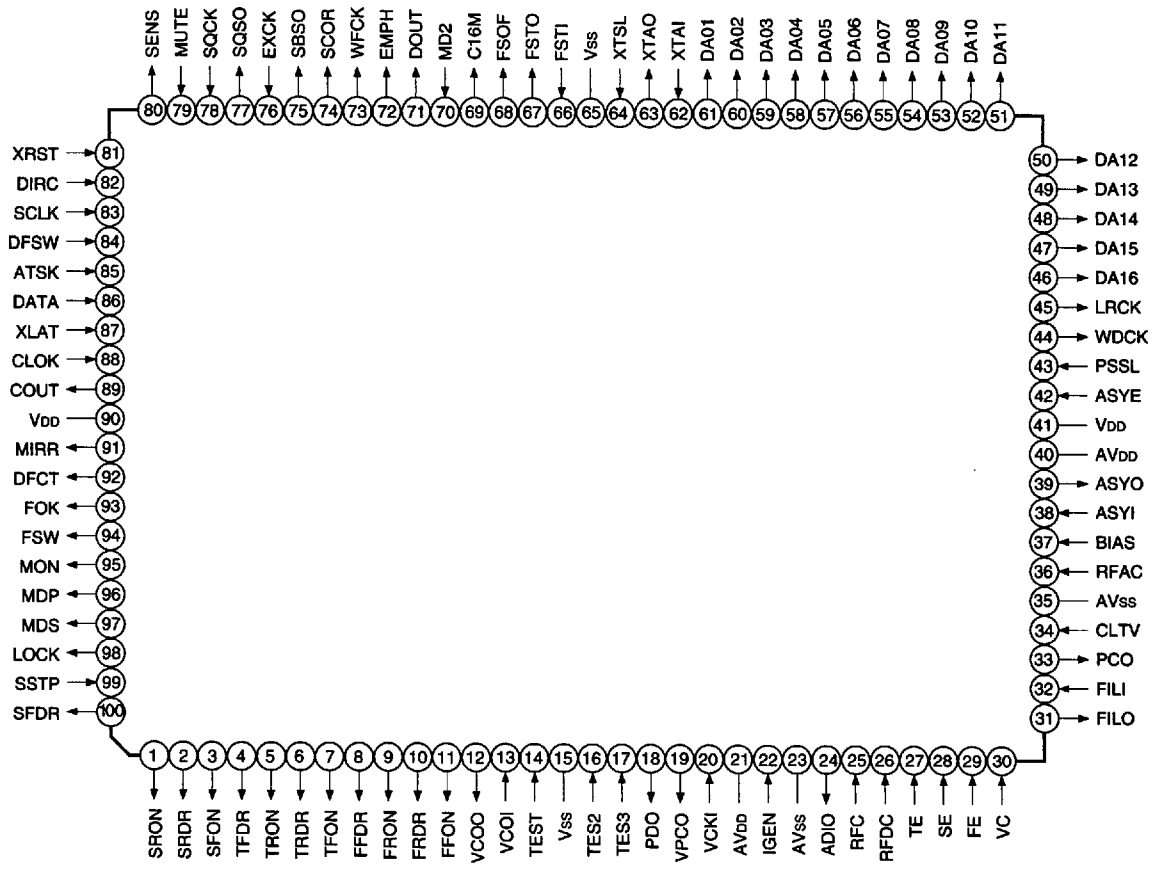


## Pin Description

| Pin No. | Symbol | I/O | Description |
|---|---|---|---|
| 1 | SRON | O | Sled drive output. |
| 2 | SRDR | O | Sled drive output. |
| 3 | SFON | O | Sled drive output. |
| 4 | TFDR | O | Tracking drive output. |
| 5 | TRON | O | Tracking drive output. |
| 6 | TRDR | O | Tracking drive output. |
| 7 | TFON | O | Tracking drive output. |
| 8 | FFDR | O | Focus drive output. |
| 9 | FRON | O | Focus drive output. |
| 10 | FRDR | O | Focus drive output. |
| 11 | FFON | O | Focus drive output. |
| 12 | VCOO | O | Analog EFM PLL oscillation circuit output. |
| 13 | VCOI | I | Analog EFM PLL oscillation circuit input. fLOCK = 8.6436MHz. |
| 14 | TEST | I | Test pin. Normally GND. |
| 15 | Vss | — | Digital GND. |



8382383 0015320 906

| Pin No. | Symbol | I/O | Description |
|---|---|---|---|
| 16 | TES2 | I | Test pin. Normally GND. |
| 17 | TES3 | I | Test pin. Normally GND. |
| 18 | PDO | O | Analog EFM PLL charge pump output. |
| 19 | VPCO | O | Variable pitch PLL charge pump output. |
| 20 | VCKI | I | Variable pitch clock input from the external VCO. fcenter = 16.9344MHz. |
| 21 | $AV_{DD}$ | — | Analog power supply. |
| 22 | IGEN | I | Reference resistance connection for digital servo operational amplifier current source. |
| 23 | $AV_{SS}$ | — | Analog GND. |
| 24 | ADIO | O | A/D converter input monitor. |
| 25 | RFC | I | RFDC input low-pass filter capacitor connection. |
| 26 | RFDC | I | RF signal input. Input range: 2.15 to 5.0V (when $V_{DD}$ = $AV_{DD}$ = 5.0V). |
| 27 | TE | I | Tracking error signal input. Input range: 2.5 ±1.0V (when $V_{DD}$ = $AV_{DD}$ = 5.0V). |
| 28 | SE | I | Sled error signal input. Input range: 2.5 ±1.0V (when $V_{DD}$ = $AV_{DD}$ = 5.0V). |
| 29 | FE | I | Focus error signal input. Input range: 2.5 ±1.0V (when $V_{DD}$ = $AV_{DD}$ = 5.0V). |
| 30 | VC | I | Center voltage input. |
| 31 | FILO | O | Master PLL filter output. |
| 32 | FILI | I | Master PLL filter input. |
| 33 | PCO | O | Master PLL charge pump output. |
| 34 | CLTV | I | Master PLL VCO control voltage input. |
| 35 | $AV_{SS}$ | — | Analog GND. |
| 36 | RFAC | I | EFM signal input. |
| 37 | BIAS | I | Constant current input of asymmetry circuit. |
| 38 | ASYI | I | Comparator voltage input of asymmetry circuit. |
| 39 | ASYO | O | EFM full-swing output (low = $V_{SS}$, high = $V_{DD}$). |
| 40 | $AV_{DD}$ | — | Analog power supply. |
| 41 | $V_{DD}$ | — | Digital power supply. |
| 42 | ASYE | I | Asymmetry circuit on/off (low = off, high = on). |
| 43 | PSSL | I | Audio data output mode switching input. Low: serial output; high: parallel output. |
| 44 | WDCK | O | D/A interface and word clock for 48-bit slot. f = 2Fs. |
| 45 | LRCK | O | D/A interface and LR clock for 48-bit slot. f = Fs. |
| 46 | DA16 | O | DA16 output when PSSL = 1. 48-bit slot serial data when PSSL = 0. |
| 47 | DA15 | O | DA15 output when PSSL = 1. 48-bit slot bit clock when PSSL = 0. |
| 48 | DA14 | O | DA14 output when PSSL = 1. 64-bit slot serial data when PSSL = 0. |
| 49 | DA13 | O | DA13 output when PSSL = 1. 64-bit slot bit clock when PSSL = 0. |
| 50 | DA12 | O | DA12 output when PSSL = 1. 64-bit slot LR clock when PSSL = 0. |
| 51 | DA11 | O | DA11 output when PSSL = 1. GTOP output when PSSL = 0. |
| 52 | DA10 | O | DA10 output when PSSL = 1. XUGF output when PSSL = 0. |



8382383 0015321 842

| Pin No. | Symbol | I/O | Description |
|---|---|---|---|
| 53 | DA09 | O | DA09 output when PSSL = 1. XPLCK output when PSSL = 0. |
| 54 | DA08 | O | DA08 output when PSSL = 1. GFS output when PSSL = 0. |
| 55 | DA07 | O | DA07 output when PSSL = 1. RFCK output when PSSL = 0. |
| 56 | DA06 | O | DA06 output when PSSL = 1. C2PO output when PSSL = 0. |
| 57 | DA05 | O | DA05 output when PSSL = 1. XRAOF output when PSSL = 0. |
| 58 | DA04 | O | DA04 output when PSSL = 1. MNT3 output when PSSL = 0. |
| 59 | DA03 | O | DA03 output when PSSL = 1. MNT2 output when PSSL = 0. |
| 60 | DA02 | O | DA02 output when PSSL = 1. MNT1 output when PSSL = 0. |
| 61 | DA01 | O | DA01 output when PSSL = 1. MNT0 output when PSSL = 0. |
| 62 | XTAI | I | Crystal oscillation circuit input. Input 16.9344MHz or 33.8688MHz. |
| 63 | XTAO | O | Crystal oscillation circuit output. |
| 64 | XTSL | I | Crystal selector input. Low when the crystal is 16.9344MHz; high when the crystal is 33.8688MHz (during normal-speed playback). |
| 65 | Vss | — | Digital GND. |
| 66 | FSTI | I | Digital servo block reference clock input. |
| 67 | FSTO | O | 2/3 frequency divider output for Pins 62 and 63. This pin does not change with variable pitch. |
| 68 | FSOF | O | 1/4 frequency divider output for Pins 62 and 63. This pin does not change with variable pitch. |
| 69 | C16M | O | 16.9344MHz output. This pin changes simultaneously with the variable pitch (during normal-speed playback). |
| 70 | MD2 | I | Digital Out on/off control (low = off, high = on). |
| 71 | DOUT | O | Digital Out output. |
| 72 | EMPH | O | Playback disc emphasis mode output. (Outputs a high signal when the playback disc has emphasis, and a low signal when there is no emphasis.) |
| 73 | WFCK | O | WFCK output. |
| 74 | SCOR | O | Subcode sync output. (Outputs a high signal when either subcode sync S0 or S1 is detected.) |
| 75 | SBSO | O | Sub P to W serial output. |
| 76 | EXCK | I | SBSO readout clock input. |
| 77 | SQSO | O | Sub Q 80-bit output. PCM peak and level data 16-bit output. |
| 78 | SQCK | I | SQSO readout clock input. |
| 79 | MUTE | I | Mute switching pin (high: mute). |
| 80 | SENS | O | SENS output to CPU. |
| 81 | XRST | I | System reset (reset when low). |
| 82 | DIRC | I | Used for 1 track jumps. (Input $V_{DD}$ level when not used.) |
| 83 | SCLK | I | SENS serial data readout clock. |
| 84 | DFSW | I | DFCT switching pin (high: DFCT countermeasure circuit off). |
| 85 | ATSK | I | Anti-shock pin. |



8382383 0015322 789

| Pin No. | Symbol | I/O | Description |
|---|---|---|---|
| 86 | DATA | I | Serial data input from CPU. |
| 87 | XLAT | I | Latch input from CPU. |
| 88 | CLOK | I | Serial data transfer clock input from CPU. |
| 89 | COUT | O | Track count signal input. |
| 90 | $V_{DD}$ | — | Digital power supply. |
| 91 | MIRR | O | Mirror signal output. |
| 92 | DFCT | O | Defect signal output. |
| 93 | FOK | O | Focus OK output. |
| 94 | FSW | O | Spindle motor output filter switching output. |
| 95 | MON | O | Spindle motor on/off control output. |
| 96 | MDP | O | Spindle motor servo control. |
| 97 | MDS | O | Spindle motor servo control. |
| 98 | LOCK | O | GFS is sampled at 460Hz; when GFS is high, this pin outputs a high signal. If GFS is low eight consecutive samples, this pin outputs low. |
| 99 | SSTP | I | Disc innermost track detective signal pin. |
| 100 | SFDR | O | Sled drive output. |

**Notes)**
- The 64-bit slot is an LSB first, two's complement output. The 48-bit slot is an MSB first, two's complement output.
- GTOP is used to monitor the frame sync protection status. (High: sync protection window released.)
- XUGF is the negative pulse for the frame sync obtained from the EFM signal. It is the signal before sync protection.
- XPLCK is the inverse of the EFM PLL clock. The PLL is designed so that the falling edge and the EFM signal transition point coincide.
- The GFS signal goes high when the frame sync and the insertion protection timing match.
- RFCK is derived from the crystal accuracy, and has a cycle of 136μs.
- C2PO represents the data error status.
- XRAOF is generated when the 32K RAM exceeds the ±28 F jitter margin.



8382383 0015323 615

## Electrical Characteristics

### 1. DC Characteristics

($V_{DD}$ = $AV_{DD}$ = 5.0V ±10%, Vss = AVss = 0V, Topr = –20 to +75°C)

| Item | | | Conditions | Min. | Typ. | Max. | Unit | Applicable pins |
|---|---|---|---|---|---|---|---|---|
| Input voltage (1) | High level input voltage | $V_{IH}$ (1) | | 0.7$V_{DD}$ | | | V | *1 |
| | Low level input voltage | $V_{IL}$ (1) | | | | 0.3$V_{DD}$ | V | |
| Input voltage (2) | High level input voltage | $V_{IH}$ (2) | Schmitt input | 0.8$V_{DD}$ | | | V | *2 |
| | Low level input voltage | $V_{IL}$ (2) | | | | 0.2$V_{DD}$ | V | |
| Input voltage (3) | Input voltage | $V_{IN}$ (3) | Analog input | Vss | | $V_{DD}$ | V | *3, 11 |
| Output voltage (1) | High level output voltage | $V_{OH}$ (1) | $I_{OH}$ = –4mA | $V_{DD}$ – 0.8 | | $V_{DD}$ | V | *4 |
| | Low level output voltage | $V_{OL}$ (1) | $I_{OL}$ = 4mA | 0 | | 0.4 | V | |
| Output voltage (2) | High level output voltage | $V_{OH}$ (2) | $I_{OH}$ = –2mA | $V_{DD}$ – 0.8 | | $V_{DD}$ | V | *5 |
| | Low level output voltage | $V_{OL}$ (2) | $I_{OL}$ = 4mA | 0 | | 0.4 | V | |
| Output voltage (3) | Low level output voltage | $V_{OL}$ (3) | $I_{OL}$ = 4mA | 0 | | 0.4 | V | *6 |
| Output voltage (4) | High level output voltage | $V_{OH}$ (4) | $I_{OH}$ = –0.28mA | $V_{DD}$ – 0.5 | | $V_{DD}$ | V | *7 |
| | Low level output voltage | $V_{OL}$ (4) | $I_{OL}$ = 0.36mA | 0 | | 0.4 | V | |
| Input leak current (1) | | $I_{LI}$ (1) | $V_I$ = 0 to 5.5V | –10 | | 10 | µA | *1, 2, 3 |
| Input leak current (2) | | $I_{LI}$ (2) | $V_I$ = 1.5 to 3.5V | –20 | | 20 | µA | *8 |
| Input leak current (3) | | $I_{LI}$ (3) | $V_I$ = 0 to 5.0V | –40 | | 600 | µA | *9 |
| Tri-state pin output leak current | | $I_{LO}$ | $V_O$ = 0 to 5.5V | –5 | | 5 | µA | *10 |

**Applicable pins**

*1 XTSL, DATA, XLAT, MD2, PSSL, TEST, TES2, TES3, DFSW, DIRC, SSTP, ATSK

*2 CLOK, XRST, EXCK, SQCK, MUTE, VCKI, ASYE, FSTI, SCLK

*3 CLTV, FILI, RFAC, ASYI, RFDC, TE, SE, FE, VC

*4 MDP, PDO, PCO, VPCO

*5 ASYO, DOUT, FSTO, FSOF, C16M, SBSO, SQSO, SCOR, EMPH, MON, LOCK, WDCK, SENS, MDS, DA01 to DA16, LRCK, WFCK, FOK, COUT, MIRR, DFCT, FFON, FRDR, FRON, FFDR, TFON, TRDR, TRON, TFDR, SFON, SRDR, SRON, SFDR

*6 FSW

*7 FILO

*8 TE, SE, FE, VC

*9 RFDC

*10 SENS, MDS, MDP, FSW, PDO, PCO, VPCO

*11 RFC



8382383 0015324 551

## 2. AC Characteristics

(1) XTAI pin, VCOI pin

(a) When using self-excited oscillation

(Topr = –20 to +75°C, $V_{DD}$ = $AV_{DD}$ = 5.0V ±10%)

| Item | Symbol | Min. | Typ. | Max. | Unit |
|---|---|---|---|---|---|
| Oscillation frequency | $f_{MAX}$ | 7 | | 34 | MHz |

(b) When inputting pulses to XTAI and VCOI

(Topr = –20 to +75°C, $V_{DD}$ = $AV_{DD}$ = 5.0V ±10%)

| Item | Symbol | Min. | Typ. | Max. | Unit |
|---|---|---|---|---|---|
| High level pulse width | $t_{WHX}$ | 13 | | 500 | ns |
| Low level pulse width | $t_{WLX}$ | 13 | | 500 | ns |
| Pulse cycle | $t_{CX}$ | 26 | | 1000 | ns |
| Input high level | $V_{IHX}$ | $V_{DD}$ – 1.0 | | | V |
| Input low level | $V_{ILX}$ | | | 0.8 | V |
| Rise time, fall time | $t_R$, $t_F$ | | | 10 | ns |

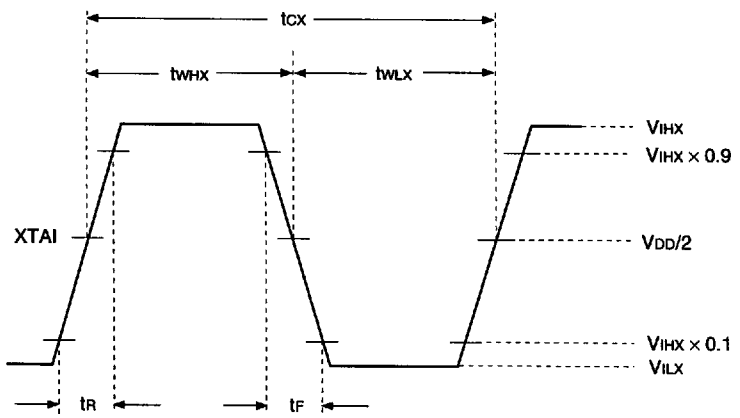


(c) When inputting sine waves to the XTAI and VCOI pins via a capacitor

(Topr = –20 to +75°C, $V_{DD}$ = $AV_{DD}$ = 5.0V ±10%)

| Item | Symbol | Min. | Typ. | Max. | Unit |
|---|---|---|---|---|---|
| Input amplitude | $V_I$ | 2.0 | | $V_{DD}$ + 0.3 | Vp-p |



8382383 0015325 498

(2) CLOK, DATA, XLAT, SQCK and EXCK pins

($V_{DD}$ = $AV_{DD}$ = 5.0V ±10%, $V_{SS}$ = $AV_{SS}$ = 0V, Topr = −20 to +75°C)

| Item | Symbol | Min. | Typ. | Max. | Unit |
|---|---|---|---|---|---|
| Clock frequency | $f_{CK}$ | | | 0.65 | MHz |
| Clock pulse width | $t_{WCK}$ | 750 | | | ns |
| Setup time | $t_{SU}$ | 300 | | | ns |
| Hold time | $t_H$ | 300 | | | ns |
| Delay time | $t_D$ | 300 | | | ns |
| Latch pulse width | $t_{WL}$ | 750 | | | ns |
| EXCK SQCK frequency | $f_T$ | | | 0.65 | MHz |
| EXCK SQCK pulse width | $t_{WT}$ | 750 | | | ns |

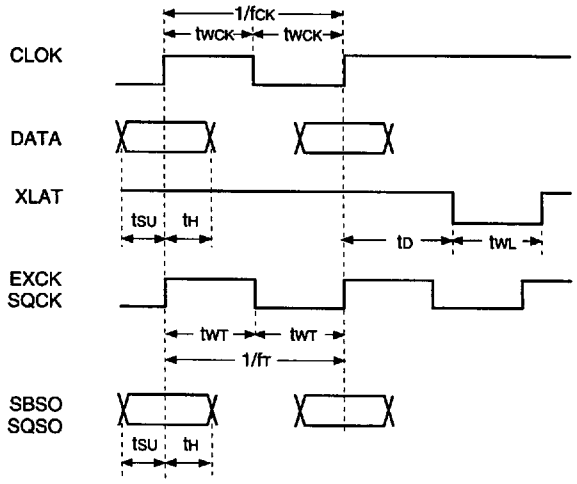




8382383 0015326 324

(3) SCLK pin

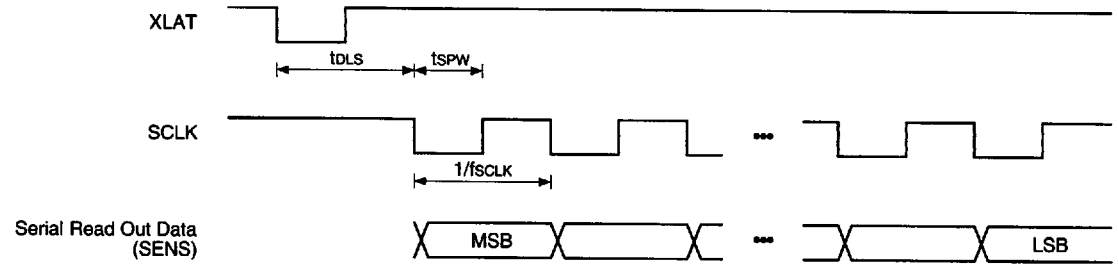


| Item | Symbol | Min. | Typ. | Max. | Unit |
|---|---|---|---|---|---|
| SCLK frequency | $f_{SCLK}$ | | | 1 | MHz |
| SCLK pulse width | $t_{SPW}$ | 500 | | | ns |
| Delay time | $t_{DLS}$ | 15 | | | µs |

(4) COUT, MIRR and DFCT pins

**Operating frequency** ($V_{DD}$ = $AV_{DD}$ = 5.0V ±10%, $V_{SS}$ = $AV_{SS}$ = 0V, Topr = –20 to +75°C)

| Item | Symbol | Min. | Typ. | Max. | Unit | Conditions |
|---|---|---|---|---|---|---|
| COUT maximum operating frequency | $f_{COUT}$ | 40 | | | kHz | *1 |
| MIRR maximum operating frequency | $f_{MIRR}$ | 40 | | | kHz | *2 |
| DFCT maximum operating frequency | $f_{DFCTH}$ | 5 | | | kHz | *3 |

*1 When using a high-speed traverse TZC.

*2

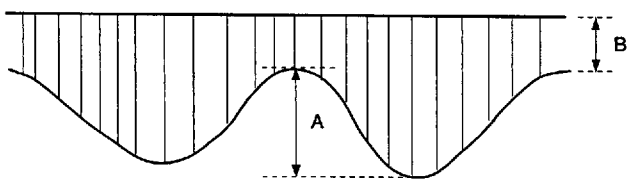


When the RF signal continuously satisfies the following conditions during the above traverse.

- A = 0.6 to 1.3V
- $\frac{B}{A+B}$ = less than 25%

*3 During complete RF signal omission.
When settings related to DFCT signal generation are Typ.



8382383 0015327 260

## Contents

**[1] CPU Interface**

§1-1. CPU Interface Timing ..... 12
§1-2. CPU Interface Command Table ..... 12
§1-3. CPU Command Presets ..... 22
§1-4. Description of SENS Signals ..... 27

**[2] Description of CD Signal Processing-System Commands and Functions**

§2-1. Description of Commands and Data Sets ..... 29
§2-2. Subcode Interface ..... 4
§2-3. Digital PLL ..... 48
§2-4. EFM Frame Sync Protection ..... 50
§2-5. Error Correction ..... 50
§2-6. DA Interface ..... 51
§2-7. Digital Out ..... 54
§2-8. Servo Auto Sequencer ..... 54
§2-9. Digital CLV ..... 63
§2-10. Asymmetry Compensation ..... 64
§2-11. Playback Speed ..... 64

**[3] Description of Servo Signal Processing-System Functions and Commands**

§3-0. General Description of the Servo Signal Processing System ..... 65
§3-1. Servo Master Clock (MCK) ..... 66
§3-2. AVRG Measurement and Compensation ..... 66
§3-3. E:F Balance Adjustment Function ..... 68
§3-4. FCS Bias Adjustment Function ..... 68
§3-5. AGCNTL Function ..... 70
§3-6. FCS Servo and FCS Search ..... 72
§3-7. TRK and SLD Servo Control ..... 73
§3-8. MIRR and DFCT Signal Generation ..... 74
§3-9. DFCT Countermeasure Circuit ..... 75
§3-10. Anti-Shock Circuit ..... 75
§3-11. Brake Circuit ..... 76
§3-12. COUT Signal ..... 77
§3-13. Serial Readout Circuit ..... 77
§3-14. Writing the Coefficient RAM ..... 78
§3-15. PWM Output ..... 78
§3-16. DIRC Input Pin ..... 80
§3-17. Servo Status Changes Produced by the LOCK Signal ..... 81
§3-18. Description of Commands and Data Sets ..... 82
§3-19. List of Servo Filter Coefficients ..... 91
§3-20. FILTER Composition ..... 93
§3-21. TRACKING and FOCUS Frequency Response ..... 100

**[4] Application Circuit**

§4-1. Application Circuit ..... 101

Explanation of abbreviations

| | |
|---|---|
| AVRG: | Average |
| AGCNTL: | Automatic gain control |
| FCS: | Focus |
| TRK: | Tracking |
| SLD: | Sled |
| DFCT: | Defect |



8382383 0015328 1T7

## [1] CPU Interface

### §1-1. CPU Interface Timing

• CPU interface

This interface uses DATA, CLOK and XLAT to set the modes.

The interface timing chart is shown below.

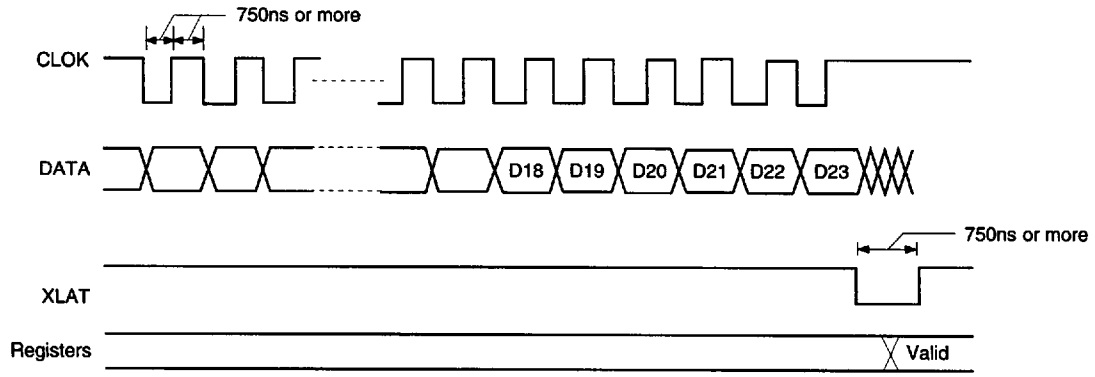


• The internal registers are initialized by a reset when XRST = 0.

### §1-2. CPU Interface Command Table

Total bit length for each register

| Register | Total bit length |
|---|---|
| 0 to 2 | 8bit |
| 3 | 8 to 24bit |
| 4 to 6 | 16bit |
| 7 | 20bit |
| 8 to A | 16bit |
| B | 20bit |
| C to E | 16bit |



8382383 0015329 033

## Command Table ($0X to 1X)

| Register | Command | Address | Data 1 | | | | Data 2 | | | | Data 3 | | | | Data 4 | | | | Data 5 | | | | |
|---|---|---|---|---|---|---|---|---|---|---|---|---|---|---|---|---|---|---|---|---|---|---|---|
| | | D23 to D20 | D19 | D18 | D17 | D16 | D15 | D14 | D13 | D12 | D11 | D10 | D9 | D8 | D7 | D6 | D5 | D4 | D3 | D2 | D1 | D0 | |
| 0 | FOCUS CONTROL | 0000 | 1 | 0 | — | — | — | — | — | — | — | — | — | — | — | — | — | — | — | — | — | — | FOCUS SERVO ON (FOCUS GAIN NORMAL) |
| | | | 1 | 1 | — | — | — | — | — | — | — | — | — | — | — | — | — | — | — | — | — | — | FOCUS SERVO ON (FOCUS GAIN DOWN) |
| | | | 0 | — | 0 | — | — | — | — | — | — | — | — | — | — | — | — | — | — | — | — | — | FOCUS SERVO OFF, 0V OUT |
| | | | 0 | — | 1 | — | — | — | — | — | — | — | — | — | — | — | — | — | — | — | — | — | FOCUS SERVO OFF, FOCUS SEARCH VOLTAGE OUT |
| | | | 0 | — | 1 | 0 | — | — | — | — | — | — | — | — | — | — | — | — | — | — | — | — | FOCUS SEARCH VOLTAGE DOWN |
| | | | 0 | — | 1 | 1 | — | — | — | — | — | — | — | — | — | — | — | — | — | — | — | — | FOCUS SEACH VOLTAGE UP |
| 1 | TRACKING CONTROL | 0001 | 1 | 0 | — | — | — | — | — | — | — | — | — | — | — | — | — | — | — | — | — | — | ANTI SHOCK ON |
| | | | 0 | — | — | — | — | — | — | — | — | — | — | — | — | — | — | — | — | — | — | — | ANTI SHOCK OFF |
| | | | — | 1 | — | — | — | — | — | — | — | — | — | — | — | — | — | — | — | — | — | — | BRAKE ON |
| | | | — | 0 | — | — | — | — | — | — | — | — | — | — | — | — | — | — | — | — | — | — | BRAKE OFF |
| | | | — | — | 0 | — | — | — | — | — | — | — | — | — | — | — | — | — | — | — | — | — | TRACKING GAIN NORMAL |
| | | | — | — | 1 | — | — | — | — | — | — | — | — | — | — | — | — | — | — | — | — | — | TRACKING GAIN UP |
| | | | — | — | — | 1 | — | — | — | — | — | — | — | — | — | — | — | — | — | — | — | — | TRACKING GAIN UP FILTER SELECT 1 |
| | | | — | — | — | 0 | — | — | — | — | — | — | — | — | — | — | — | — | — | — | — | — | TRACKING GAIN UP FILTER SELECT 2 |

—: Don't care



8382383 0015330 855

## Command Table ($2X to 3X)

| Register | Command | Address | Data 1 | | | | Data 2 | | | | Data 3 | | | | Data 4 | | | | Data 5 | | | | |
|---|---|---|---|---|---|---|---|---|---|---|---|---|---|---|---|---|---|---|---|---|---|---|---|
| | | D23 to D20 | D19 | D18 | D17 | D16 | D15 | D14 | D13 | D12 | D11 | D10 | D9 | D8 | D7 | D6 | D5 | D4 | D3 | D2 | D1 | D0 | |
| 2 | TRACKING MODE | 0010 | 0 | 0 | — | — | — | — | — | — | — | — | — | — | — | — | — | — | — | — | — | — | TRACKING SERVO OFF |
| | | | 0 | 1 | — | — | — | — | — | — | — | — | — | — | — | — | — | — | — | — | — | — | TRACKING SERVO ON |
| | | | 1 | 0 | — | — | — | — | — | — | — | — | — | — | — | — | — | — | — | — | — | — | FORWARD TRACK JUMP |
| | | | 1 | 1 | — | — | — | — | — | — | — | — | — | — | — | — | — | — | — | — | — | — | REVERSE TRACK JUMP |
| | | | — | — | 0 | 0 | — | — | — | — | — | — | — | — | — | — | — | — | — | — | — | — | SLED SERVO OFF |
| | | | — | — | 0 | 1 | — | — | — | — | — | — | — | — | — | — | — | — | — | — | — | — | SLED SERVO ON |
| | | | — | — | 1 | 0 | — | — | — | — | — | — | — | — | — | — | — | — | — | — | — | — | FORWARD SLED MOVE |
| | | | — | — | 1 | 1 | — | — | — | — | — | — | — | — | — | — | — | — | — | — | — | — | REVERSE SLED MOVE |

| Register | Command | Address | | Data 1 | | Data 2 | | | | Data 3 | | | | Data 4 | | | | Data 5 | | | | |
|---|---|---|---|---|---|---|---|---|---|---|---|---|---|---|---|---|---|---|---|---|---|---|
| | | D23 to D20 | D19 | D18 | D17 | D16 | D15 | D14 | D13 | D12 | D11 | D10 | D9 | D8 | D7 | D6 | D5 | D4 | D3 | D2 | D1 | D0 | |
| 3 | SELECT | 0011 | 0 | 0 | 0 | 0 | — | — | — | — | — | — | — | — | — | — | — | — | — | — | — | — | SLED KICK LEVEL (±1 + basic value) (Default) |
| | | | 0 | 0 | 0 | 1 | — | — | — | — | — | — | — | — | — | — | — | — | — | — | — | — | SLED KICK LEVEL (±2 + basic value) |
| | | | 0 | 0 | 1 | 0 | — | — | — | — | — | — | — | — | — | — | — | — | — | — | — | — | SLED KICK LEVEL (±3 + basic value) |
| | | | 0 | 0 | 1 | 1 | — | — | — | — | — | — | — | — | — | — | — | — | — | — | — | — | SLED KICK LEVEL (±4 + basic value) |

—: Don't care



8382383 0015331 791

## Command Table ($340X)

| Register | Command | Address 1 | Address 2 | Address 3 | Address 4 | | | | Data 1 | | | | Data 2 | | | | |
|---|---|---|---|---|---|---|---|---|---|---|---|---|---|---|---|---|---|
| | | D23 to D20 | D19 to D16 | D15 to D12 | D11 | D10 | D9 | D8 | D7 | D6 | D5 | D4 | D3 | D2 | D1 | D0 | |
| 3 | SELECT | 0011 | 0100 | 0000 | 0 | 0 | 0 | 0 | KD7 | KD6 | KD5 | KD4 | KD3 | KD2 | KD1 | KD0 | KRAM DATA (K00)<br>SLED INPUT GAIN |
| | | | | | 0 | 0 | 0 | 1 | KD7 | KD6 | KD5 | KD4 | KD3 | KD2 | KD1 | KD0 | KRAM DATA (K01)<br>SLED LOW BOOST FILTER A-H |
| | | | | | 0 | 0 | 1 | 0 | KD7 | KD6 | KD5 | KD4 | KD3 | KD2 | KD1 | KD0 | KRAM DATA (K02)<br>SLED LOW BOOST FILTER A-L |
| | | | | | 0 | 0 | 1 | 1 | KD7 | KD6 | KD5 | KD4 | KD3 | KD2 | KD1 | KD0 | KRAM DATA (K03)<br>SLED LOW BOOST FILTER B-H |
| | | | | | 0 | 1 | 0 | 0 | KD7 | KD6 | KD5 | KD4 | KD3 | KD2 | KD1 | KD0 | KRAM DATA (K04)<br>SLED LOW BOOST FILTER B-L |
| | | | | | 0 | 1 | 0 | 1 | KD7 | KD6 | KD5 | KD4 | KD3 | KD2 | KD1 | KD0 | KRAM DATA (K05)<br>SLED OUTPUT GAIN |
| | | | | | 0 | 1 | 1 | 0 | KD7 | KD6 | KD5 | KD4 | KD3 | KD2 | KD1 | KD0 | KRAM DATA (K06)<br>FOCUS INPUT GAIN |
| | | | | | 0 | 1 | 1 | 1 | KD7 | KD6 | KD5 | KD4 | KD3 | KD2 | KD1 | KD0 | KRAM DATA (K07)<br>SLED AUTO GAIN |
| | | | | | 1 | 0 | 0 | 0 | KD7 | KD6 | KD5 | KD4 | KD3 | KD2 | KD1 | KD0 | KRAM DATA (K08)<br>FOCUS HIGH CUT FILTER A |
| | | | | | 1 | 0 | 0 | 1 | KD7 | KD6 | KD5 | KD4 | KD3 | KD2 | KD1 | KD0 | KRAM DATA (K09)<br>FOCUS HIGH CUT FILTER B |
| | | | | | 1 | 0 | 1 | 0 | KD7 | KD6 | KD5 | KD4 | KD3 | KD2 | KD1 | KD0 | KRAM DATA (K0A)<br>FOCUS LOW BOOST FILTER A-H |
| | | | | | 1 | 0 | 1 | 1 | KD7 | KD6 | KD5 | KD4 | KD3 | KD2 | KD1 | KD0 | KRAM DATA (K0B)<br>FOCUS LOW BOOST FILTER A-L |
| | | | | | 1 | 1 | 0 | 0 | KD7 | KD6 | KD5 | KD4 | KD3 | KD2 | KD1 | KD0 | KRAM DATA (K0C)<br>FOCUS LOW BOOST FILTER B-H |
| | | | | | 1 | 1 | 0 | 1 | KD7 | KD6 | KD5 | KD4 | KD3 | KD2 | KD1 | KD0 | KRAM DATA (K0D)<br>FOCUS LOW BOOST FILTER B-L |
| | | | | | 1 | 1 | 1 | 0 | KD7 | KD6 | KD5 | KD4 | KD3 | KD2 | KD1 | KD0 | KRAM DATA (K0E)<br>FOCUS PHASE COMPENSATE FILTER A |
| | | | | | 1 | 1 | 1 | 1 | KD7 | KD6 | KD5 | KD4 | KD3 | KD2 | KD1 | KD0 | KRAM DATA (K0F)<br>FOCUS DEFECT HOLD GAIN |



8382383 0015332 628

## Command Table ($341X)

| Register | Command | Address 1 | Address 2 | Address 3 | Address 4 | | | | Data 1 | | | | Data 2 | | | | |
|---|---|---|---|---|---|---|---|---|---|---|---|---|---|---|---|---|---|
| | | D23 to D20 | D19 to D16 | D15 to D12 | D11 | D10 | D9 | D8 | D7 | D6 | D5 | D4 | D3 | D2 | D1 | D0 | |
| 3 | SELECT | 0011 | 0100 | 0001 | 0 | 0 | 0 | 0 | KD7 | KD6 | KD5 | KD4 | KD3 | KD2 | KD1 | KD0 | KRAM DATA (K10)<br>FOCUS PHASE COMPENSATE FILTER B |
| | | | | | 0 | 0 | 0 | 1 | KD7 | KD6 | KD5 | KD4 | KD3 | KD2 | KD1 | KD0 | KRAM DATA (K11)<br>FOCUS OUTPUT GAIN |
| | | | | | 0 | 0 | 1 | 0 | KD7 | KD6 | KD5 | KD4 | KD3 | KD2 | KD1 | KD0 | KRAM DATA (K12)<br>ANTI SHOCK INPUT GAIN |
| | | | | | 0 | 0 | 1 | 1 | KD7 | KD6 | KD5 | KD4 | KD3 | KD2 | KD1 | KD0 | KRAM DATA (K13)<br>FOCUS AUTO GAIN |
| | | | | | 0 | 1 | 0 | 0 | KD7 | KD6 | KD5 | KD4 | KD3 | KD2 | KD1 | KD0 | KRAM DATA (K14)<br>HPTZC / AUTO GAIN HIGH PASS FILTER A |
| | | | | | 0 | 1 | 0 | 1 | KD7 | KD6 | KD5 | KD4 | KD3 | KD2 | KD1 | KD0 | KRAM DATA (K15)<br>HPTZC / AUTO GAIN HIGH PASS FILTER B |
| | | | | | 0 | 1 | 1 | 0 | KD7 | KD6 | KD5 | KD4 | KD3 | KD2 | KD1 | KD0 | KRAM DATA (K16)<br>ANTI SHOCK HIGH PASS FILTER A |
| | | | | | 0 | 1 | 1 | 1 | KD7 | KD6 | KD5 | KD4 | KD3 | KD2 | KD1 | KD0 | KRAM DATA (K17)<br>HPTZC / AUTO GAIN LOW PASS FILTER B |
| | | | | | 1 | 0 | 0 | 0 | KD7 | KD6 | KD5 | KD4 | KD3 | KD2 | KD1 | KD0 | KRAM DATA (K18)<br>FIX |
| | | | | | 1 | 0 | 0 | 1 | KD7 | KD6 | KD5 | KD4 | KD3 | KD2 | KD1 | KD0 | KRAM DATA (K19)<br>TRACKING INPUT GAIN |
| | | | | | 1 | 0 | 1 | 0 | KD7 | KD6 | KD5 | KD4 | KD3 | KD2 | KD1 | KD0 | KRAM DATA (K1A)<br>TRACKING HIGH CUT FILTER A |
| | | | | | 1 | 0 | 1 | 1 | KD7 | KD6 | KD5 | KD4 | KD3 | KD2 | KD1 | KD0 | KRAM DATA (K1B)<br>TRACKING HIGH CUT FILTER B |
| | | | | | 1 | 1 | 0 | 0 | KD7 | KD6 | KD5 | KD4 | KD3 | KD2 | KD1 | KD0 | KRAM DATA (K1C)<br>TRACKING LOW BOOST FILTER A-H |
| | | | | | 1 | 1 | 0 | 1 | KD7 | KD6 | KD5 | KD4 | KD3 | KD2 | KD1 | KD0 | KRAM DATA (K1D)<br>TRACKING LOW BOOST FILTER A-L |
| | | | | | 1 | 1 | 1 | 0 | KD7 | KD6 | KD5 | KD4 | KD3 | KD2 | KD1 | KD0 | KRAM DATA (K1E)<br>TRACKING LOW BOOST FILTER B-H |
| | | | | | 1 | 1 | 1 | 1 | KD7 | KD6 | KD5 | KD4 | KD3 | KD2 | KD1 | KD0 | KRAM DATA (K1F)<br>TRACKING LOW BOOST FILTER B-L |



8382383 0015333 564

## Command Table ($342X)

| Register | Command | Address 1 | Address 2 | Address 3 | Address 4 | | | | Data 1 | | | | Data 2 | | | | |
|---|---|---|---|---|---|---|---|---|---|---|---|---|---|---|---|---|---|
| | | D23 to D20 | D19 to D16 | D15 to D12 | D11 | D10 | D9 | D8 | D7 | D6 | D5 | D4 | D3 | D2 | D1 | D0 | |
| 3 | SELECT | 0011 | 0100 | 0010 | 0 | 0 | 0 | 0 | KD7 | KD6 | KD5 | KD4 | KD3 | KD2 | KD1 | KD0 | KRAM DATA (K20)<br>TRACKING PHASE COMPENSATE FILTER A |
| | | | | | 0 | 0 | 0 | 1 | KD7 | KD6 | KD5 | KD4 | KD3 | KD2 | KD1 | KD0 | KRAM DATA (K21)<br>TRACKING PHASE COMPENSATE FILTER B |
| | | | | | 0 | 0 | 1 | 0 | KD7 | KD6 | KD5 | KD4 | KD3 | KD2 | KD1 | KD0 | KRAM DATA (K22)<br>TRACKING OUTPUT GAIN |
| | | | | | 0 | 0 | 1 | 1 | KD7 | KD6 | KD5 | KD4 | KD3 | KD2 | KD1 | KD0 | KRAM DATA (K23)<br>TRACKING AUTO GAIN |
| | | | | | 0 | 1 | 0 | 0 | KD7 | KD6 | KD5 | KD4 | KD3 | KD2 | KD1 | KD0 | KRAM DATA (K24)<br>FOCUS GAIN DOWN HIGH CUT FILTER A |
| | | | | | 0 | 1 | 0 | 1 | KD7 | KD6 | KD5 | KD4 | KD3 | KD2 | KD1 | KD0 | KRAM DATA (K25)<br>FOCUS GAIN DOWN HIGH CUT FILTER B |
| | | | | | 0 | 1 | 1 | 0 | KD7 | KD6 | KD5 | KD4 | KD3 | KD2 | KD1 | KD0 | KRAM DATA (K26)<br>FOCUS GAIN DOWN LOW BOOST FILTER A-H |
| | | | | | 0 | 1 | 1 | 1 | KD7 | KD6 | KD5 | KD4 | KD3 | KD2 | KD1 | KD0 | KRAM DATA (K27)<br>FOCUS GAIN DOWN LOW BOOST FILTER A-L |
| | | | | | 1 | 0 | 0 | 0 | KD7 | KD6 | KD5 | KD4 | KD3 | KD2 | KD1 | KD0 | KRAM DATA (K28)<br>FOCUS GAIN DOWN LOW BOOST FILTER B-H |
| | | | | | 1 | 0 | 0 | 1 | KD7 | KD6 | KD5 | KD4 | KD3 | KD2 | KD1 | KD0 | KRAM DATA (K29)<br>FOCUS GAIN DOWN LOW BOOST FILTER B-L |
| | | | | | 1 | 0 | 1 | 0 | KD7 | KD6 | KD5 | KD4 | KD3 | KD2 | KD1 | KD0 | KRAM DATA (K2A)<br>FOCUS GAIN DOWN PHASE COMPENSATE FILTER A |
| | | | | | 1 | 0 | 1 | 1 | KD7 | KD6 | KD5 | KD4 | KD3 | KD2 | KD1 | KD0 | KRAM DATA (K2B)<br>FOCUS GAIN DOWN DEFECT HOLD GAIN |
| | | | | | 1 | 1 | 0 | 0 | KD7 | KD6 | KD5 | KD4 | KD3 | KD2 | KD1 | KD0 | KRAM DATA (K2C)<br>FOCUS GAIN DOWN PHASE COMPENSATE FILTER B |
| | | | | | 1 | 1 | 0 | 1 | KD7 | KD6 | KD5 | KD4 | KD3 | KD2 | KD1 | KD0 | KRAM DATA (K2D)<br>FOCUS GAIN DOWN OUTPUT GAIN |
| | | | | | 1 | 1 | 1 | 0 | KD7 | KD6 | KD5 | KD4 | KD3 | KD2 | KD1 | KD0 | KRAM DATA (K2E)<br>NOT USED |
| | | | | | 1 | 1 | 1 | 1 | KD7 | KD6 | KD5 | KD4 | KD3 | KD2 | KD1 | KD0 | KRAM DATA (K2F)<br>NOT USED |



8582383 0015334 4T0

## Command Table ($343X)

| Regiater | Command | Address 1 | Address 2 | Address 3 | Address 4 | | | | Data 1 | | | | Data 2 | | | | |
|---|---|---|---|---|---|---|---|---|---|---|---|---|---|---|---|---|---|
| | | D23 to D20 | D19 to D16 | D15 to D12 | D11 | D10 | D9 | D8 | D7 | D6 | D5 | D4 | D3 | D2 | D1 | D0 | |
| 3 | SELECT | 0011 | 0100 | 0011 | 0 | 0 | 0 | 0 | KD7 | KD6 | KD5 | KD4 | KD3 | KD2 | KD1 | KD0 | KRAM DATA (K30)<br>FIX |
| | | | | | 0 | 0 | 0 | 1 | KD7 | KD6 | KD5 | KD4 | KD3 | KD2 | KD1 | KD0 | KRAM DATA (K31)<br>ANTI SHOCK LOW PASS FILTER B |
| | | | | | 0 | 0 | 1 | 0 | KD7 | KD6 | KD5 | KD4 | KD3 | KD2 | KD1 | KD0 | KRAM DATA (K32)<br>NOT USED |
| | | | | | 0 | 0 | 1 | 1 | KD7 | KD6 | KD5 | KD4 | KD3 | KD2 | KD1 | KD0 | KRAM DATA (K33)<br>ANTI SHOCK HIGH PASS FILTER B-H |
| | | | | | 0 | 1 | 0 | 0 | KD7 | KD6 | KD5 | KD4 | KD3 | KD2 | KD1 | KD0 | KRAM DATA (K34)<br>ANTI SHOCK HIGH PASS FILTER B-L |
| | | | | | 0 | 1 | 0 | 1 | KD7 | KD6 | KD5 | KD4 | KD3 | KD2 | KD1 | KD0 | KRAM DATA (K35)<br>ANTI SHOCK FILTER COMPARATE GAIN |
| | | | | | 0 | 1 | 1 | 0 | KD7 | KD6 | KD5 | KD4 | KD3 | KD2 | KD1 | KD0 | KRAM DATA (K36)<br>TRACKING GAIN UP2 HIGH CUT FILTER A |
| | | | | | 0 | 1 | 1 | 1 | KD7 | KD6 | KD5 | KD4 | KD3 | KD2 | KD1 | KD0 | KRAM DATA (K37)<br>TRACKING GAIN UP2 HIGH CUT FILTER B |
| | | | | | 1 | 0 | 0 | 0 | KD7 | KD6 | KD5 | KD4 | KD3 | KD2 | KD1 | KD0 | KRAM DATA (K38)<br>TRACKING GAIN UP2 LOW BOOST FILTER A-H |
| | | | | | 1 | 0 | 0 | 1 | KD7 | KD6 | KD5 | KD4 | KD3 | KD2 | KD1 | KD0 | KRAM DATA (K39)<br>TRACKING GAIN UP2 LOW BOOST FILTER A-L |
| | | | | | 1 | 0 | 1 | 0 | KD7 | KD6 | KD5 | KD4 | KD3 | KD2 | KD1 | KD0 | KRAM DATA (K3A)<br>TRACKING GAIN UP2 LOW BOOST FILTER B-H |
| | | | | | 1 | 0 | 1 | 1 | KD7 | KD6 | KD5 | KD4 | KD3 | KD2 | KD1 | KD0 | KRAM DATA (K3B)<br>TRACKING GAIN UP2 LOW BOOST FILTER B-L |
| | | | | | 1 | 1 | 0 | 0 | KD7 | KD6 | KD5 | KD4 | KD3 | KD2 | KD1 | KD0 | KRAM DATA (K3C)<br>TRACKING GAIN UP PHASE COMPENSATE FILTER A |
| | | | | | 1 | 1 | 0 | 1 | KD7 | KD6 | KD5 | KD4 | KD3 | KD2 | KD1 | KD0 | KRAM DATA (K3D)<br>TRACKING GAIN UP PHASE COMPENSATE FILTER B |
| | | | | | 1 | 1 | 1 | 0 | KD7 | KD6 | KD5 | KD4 | KD3 | KD2 | KD1 | KD0 | KRAM DATA (K3E)<br>TRACKING GAIN UP OUTPUT GAIN |
| | | | | | 1 | 1 | 1 | 1 | KD7 | KD6 | KD5 | KD4 | KD3 | KD2 | KD1 | KD0 | KRAM DATA (K3F)<br>NOT USED |



8382383 0015335 337

## Command Table ($344X)

| Register | Command | Address 1 | Address 2 | Address 3 | Address 4 | | | | Data 1 | | | | Data 2 | | | | |
|---|---|---|---|---|---|---|---|---|---|---|---|---|---|---|---|---|---|
| | | D23 to D20 | D19 to D16 | D15 to D12 | D11 | D10 | D9 | D8 | D7 | D6 | D5 | D4 | D3 | D2 | D1 | D0 | |
| 3 | SELECT | 0011 | 0100 | 0100 | 0 | 0 | 0 | 0 | KD7 | KD6 | KD5 | KD4 | KD3 | KD2 | KD1 | KD0 | KRAM DATA (K40)<br>TRACKING HOLD FILTER INPUT GAIN |
| | | | | | 0 | 0 | 0 | 1 | KD7 | KD6 | KD5 | KD4 | KD3 | KD2 | KD1 | KD0 | KRAM DATA (K41)<br>TRACKING HOLD FILTER A-H |
| | | | | | 0 | 0 | 1 | 0 | KD7 | KD6 | KD5 | KD4 | KD3 | KD2 | KD1 | KD0 | KRAM DATA (K42)<br>TRACKING HOLD FILTER A-L |
| | | | | | 0 | 0 | 1 | 1 | KD7 | KD6 | KD5 | KD4 | KD3 | KD2 | KD1 | KD0 | KRAM DATA (K43)<br>TRACKING HOLD FILTER B-H |
| | | | | | 0 | 1 | 0 | 0 | KD7 | KD6 | KD5 | KD4 | KD3 | KD2 | KD1 | KD0 | KRAM DATA (K44)<br>TRACKING HOLD FILTER B-L |
| | | | | | 0 | 1 | 0 | 1 | KD7 | KD6 | KD5 | KD4 | KD3 | KD2 | KD1 | KD0 | KRAM DATA (K45)<br>TRACKING HOLD FILTER OUTPUT GAIN |
| | | | | | 0 | 1 | 1 | 0 | KD7 | KD6 | KD5 | KD4 | KD3 | KD2 | KD1 | KD0 | KRAM DATA (K46)<br>NOT USED |
| | | | | | 0 | 1 | 1 | 1 | KD7 | KD6 | KD5 | KD4 | KD3 | KD2 | KD1 | KD0 | KRAM DATA (K47)<br>NOT USED |
| | | | | | 1 | 0 | 0 | 0 | KD7 | KD6 | KD5 | KD4 | KD3 | KD2 | KD1 | KD0 | KRAM DATA (K48)<br>FOCUS HOLD FILTER INPUT GAIN |
| | | | | | 1 | 0 | 0 | 1 | KD7 | KD6 | KD5 | KD4 | KD3 | KD2 | KD1 | KD0 | KRAM DATA (K49)<br>FOCUS HOLD FILTER A-H |
| | | | | | 1 | 0 | 1 | 0 | KD7 | KD6 | KD5 | KD4 | KD3 | KD2 | KD1 | KD0 | KRAM DATA (K4A)<br>FOCUS HOLD FILTER A-L |
| | | | | | 1 | 0 | 1 | 1 | KD7 | KD6 | KD5 | KD4 | KD3 | KD2 | KD1 | KD0 | KRAM DATA (K4B)<br>FOCUS HOLD FILTER B-H |
| | | | | | 1 | 1 | 0 | 0 | KD7 | KD6 | KD5 | KD4 | KD3 | KD2 | KD1 | KD0 | KRAM DATA (K4C)<br>FOCUS HOLD FILTER B-L |
| | | | | | 1 | 1 | 0 | 1 | KD7 | KD6 | KD5 | KD4 | KD3 | KD2 | KD1 | KD0 | KRAM DATA (K4D)<br>FOCUS HOLD FILTER OUTPUT GAIN |
| | | | | | 1 | 1 | 1 | 0 | KD7 | KD6 | KD5 | KD4 | KD3 | KD2 | KD1 | KD0 | KRAM DATA (K4E)<br>NOT USED |
| | | | | | 1 | 1 | 1 | 1 | KD7 | KD6 | KD5 | KD4 | KD3 | KD2 | KD1 | KD0 | KRAM DATA (K4F)<br>NOT USED |



8382383 0015336 272

## Command Table ($34FX to 3FX)

| Register | Command | Address 1 | | | | | Address 2 | | | | | | Data 1 | | Data 2 | | | | Data 3 | | | | |
|---|---|---|---|---|---|---|---|---|---|---|---|---|---|---|---|---|---|---|---|---|---|---|---|
| | | D23 to D20 | D19 | D18 | D17 | D16 | D15 | D14 | D13 | D12 | D11 | D10 | D9 | D8 | D7 | D6 | D5 | D4 | D3 | D2 | D1 | D0 | |
| 3 | SELECT | 0011 | 0 | 1 | 0 | 0 | 1 | 1 | 1 | 1 | 0 | 1 | FB9 | FB8 | FB7 | FB6 | FB5 | FB4 | FB3 | FB2 | FB1 | — | FOCUS BIAS DATA |
| | | 0011 | 0 | 1 | 0 | 0 | 1 | 1 | 1 | 1 | 0 | 0 | TV9 | TV8 | TV7 | TV6 | TV5 | TV4 | TV3 | TV2 | TV1 | TV0 | TRVSC DATA |
| | | Address | | | | | Data 1 | | | | Data 2 | | | | Data 3 | | | | Data 4 | | | | |
| | | D23 to D20 | D19 | D18 | D17 | D16 | D15 | D14 | D13 | D12 | D11 | D10 | D9 | D8 | D7 | D6 | D5 | D4 | D3 | D2 | D1 | D0 | |
| | | 0011 | 0 | 1 | 0 | 1 | FT1 | FT0 | FS5 | FS4 | FS3 | FS2 | FS1 | FS0 | FTZ | FG6 | FG5 | FG4 | FG3 | FG2 | FG1 | FG0 | FOCUS SEARCH SPEED/ VOLTAGE/AUTO GAIN |
| | | | 0 | 1 | 1 | 0 | 0 | DTZC | TJ5 | TJ4 | TJ3 | TJ2 | TJ1 | TJ0 | 0 | TG6 | TG5 | TG4 | TG3 | TG2 | TG1 | TG0 | DTZC/TRACK JUMP VOLTAGE/AUTO GAIN |
| | | | 0 | 1 | 1 | 1 | FZSH | FZSL | SM5 | SM4 | SM3 | SM2 | SM1 | SM0 | AGS | AGJ | AGGF | AGGT | AGV1 | AGV2 | AGHS | AGHT | FZSL/SLED MOVE/ Voltage/AUTO GAIN |
| | | | 1 | 0 | 0 | 0 | VCLM | VCLC | FLM | FLC0 | RFLM | RFLC | AGF | AGT | DFSW | LKSW | TBLM | TCLM | FLC1 | TLC2 | TLC1 | TLC0 | LEVEL/AUTO GAIN/ DFSW/ (Initialize) |
| | | | 1 | 0 | 0 | 1 | DAC | SD6 | SD5 | SD4 | SD3 | SD2 | SD1 | SD0 | 0 | 0 | 0 | 0 | 0 | 0 | 0 | 0 | SERIAL DATA READ MODE/SELECT |
| | | | 1 | 0 | 1 | 0 | 0 | FBON | 0 | 0 | 0 | 0 | 0 | 0 | 0 | 0 | 0 | 0 | 0 | 0 | 0 | 0 | FOCUS BIAS |
| | | | 1 | 0 | 1 | 1 | SFO2 | SFO1 | SDF2 | SDF1 | MAX2 | MAX1 | SFOX | BTF | D2V2 | D2V1 | D1V2 | D1V1 | 0 | 0 | 0 | 0 | Operation for MIRR/ DFCT/FOK |
| | | Address | | | | | Data 1 | | | | Data 2 | | | | Data 3 | | | | Data 4 | | | | |
| | | D23 to D20 | D19 | D18 | D17 | D16 | D15 | D14 | D13 | D12 | D11 | D10 | D9 | D8 | D7 | D6 | D5 | D4 | D3 | D2 | D1 | D0 | |
| | | 0011 | 1 | 1 | 0 | 0 | — | — | — | — | — | — | — | — | — | — | — | — | — | — | — | — | TZC for COUT SLCT HPTZC (Default) |
| | | | 1 | 1 | 0 | 1 | — | — | — | — | — | — | — | — | — | — | — | — | — | — | — | — | TZC for COUT SLCT DTZC |
| | | Address | | | | | Data 1 | | | | Data 2 | | | | Data 3 | | | | Data 4 | | | | |
| | | D23 to D20 | D19 | D18 | D17 | D16 | D15 | D14 | D13 | D12 | D11 | D10 | D9 | D8 | D7 | D6 | D5 | D4 | D3 | D2 | D1 | D0 | |
| | | 0011 | 1 | 1 | 1 | 0 | F1NM | F1DM | F3NM | F3DM | T1NM | T1UM | T3NM | T3UM | DFIS | TLCD | RFLP | 0 | 0 | 0 | 0 | 0 | Filter |
| | | | 1 | 1 | 1 | 1 | 0 | 0 | XT4D | XT2D | 0 | DRR2 | DRR1 | DRR0 | 0 | ASFG | 0 | LPAS | SRO1 | SRO0 | 0 | 0 | Others |

—: Don't care



8382383 0015337 1QT

## Command Table ($4X to EX)

| Register | Command | Address | Data 1 | | | | Data 2 | | | | Data 3 | | | | Data 4 | | | | Data 5 | | | |
|---|---|---|---|---|---|---|---|---|---|---|---|---|---|---|---|---|---|---|---|---|---|---|
| | | D23 to D20 | D19 | D18 | D17 | D16 | D15 | D14 | D13 | D12 | D11 | D10 | D9 | D8 | D7 | D6 | D5 | D4 | D3 | D2 | D1 | D0 |
| 4 | Auto sequence | 0 1 0 0 | AS3 | AS2 | AS1 | AS0 | MT3 | MT2 | MT1 | MT0 | LSSL | 0 | 0 | 0 | — | — | — | — | — | — | — | — |
| 5 | Blind (A, E), Brake (B), Overflow (C, D) | 0 1 0 1 | TR3 | TR2 | TR1 | TR0 | 0 | 0 | 0 | 0 | 0 | 0 | 0 | 0 | — | — | — | — | — | — | — | — |
| 6 | Sled kick, brake (D), Kick (F) | 0 1 1 0 | SD3 | SD2 | SD1 | SD0 | KF3 | KF2 | KF1 | KF0 | 0 | 0 | 0 | 0 | — | — | — | — | — | — | — | — |
| 7 | Auto sequence (N) track jump count setting | 0 1 1 1 | 32,768 | 16,384 | 8,192 | 4,096 | 2,048 | 1,024 | 512 | 256 | 128 | 64 | 32 | 16 | 8 | 4 | 2 | 1 | — | — | — | — |
| 8 | MODE setting | 1 0 0 0 | CD-ROM | DOUT Mute | D. out Mute-F | WSEL | VCO SEL | ASHS | SOCT | 0 | 0 | 0 | 0 | 0 | — | — | — | — | — | — | — | — |
| 9 | Function specification | 1 0 0 1 | DCLV ON-OFF | DSPB ON-OFF | ASEQ ON-OFF | DPLL ON-OFF | BiliGL MAIN | BiliGL SUB | FLFC | 0 | 0 | 0 | 0 | 0 | — | — | — | — | — | — | — | — |
| A | Audio CTRL | 1 0 1 0 | Vari Up | Vari Down | Mute | ATT | PTC1 | PTC2 | 0 | 0 | 0 | 0 | 0 | 0 | — | — | — | — | — | — | — | — |
| B | Traverse monitor counter setting | 1 0 1 1 | 32,768 | 16,384 | 8,192 | 4,096 | 2,048 | 1,024 | 512 | 256 | 128 | 64 | 32 | 16 | 8 | 4 | 2 | 1 | — | — | — | — |
| C | Spindle servo coefficient setting | 1 1 0 0 | Gain MDP1 | Gain MDP0 | Gain MDS1 | Gain MDS0 | 0 | Gain DCLV0 | 0 | 0 | 0 | 0 | 0 | 0 | — | — | — | — | — | — | — | — |
| D | CLV CTRL | 1 1 0 1 | DCLV PWM MD | TB | TP | Gain CLVS | 0 | 0 | 0 | 0 | 0 | 0 | 0 | 0 | — | — | — | — | — | — | — | — |
| E | CLV MODE | 1 1 1 0 | CM3 | CM2 | CM1 | CM0 | 0 | 0 | 0 | 0 | 0 | 0 | 0 | 0 | — | — | — | — | — | — | — | — |

—: Don't care



8382383 0015336 04b

## §1-3. CPU Command Presets

### Command Preset Table ($0X to 34X)

| Register | Command | Address | Data 1 | | | | Data 2 | | | | Data 3 | | | | Data 4 | | | | Data 5 | | | | |
|---|---|---|---|---|---|---|---|---|---|---|---|---|---|---|---|---|---|---|---|---|---|---|---|
| | | D23 to D20 | D19 | D18 | D17 | D16 | D15 | D14 | D13 | D12 | D11 | D10 | D9 | D8 | D7 | D6 | D5 | D4 | D3 | D2 | D1 | D0 | |
| 0 | FOCUS CONTROL | 0000 | 0 | 0 | 0 | 0 | — | — | — | — | — | — | — | — | — | — | — | — | — | — | — | — | FOCUS SERVO OFF, 0V OUT |
| 1 | TRACKING CONTROL | 0001 | 0 | 0 | 0 | 1 | — | — | — | — | — | — | — | — | — | — | — | — | — | — | — | — | TRACKING GAIN UP FILTER SELECT 1 |
| 2 | TRACKING MODE | 0010 | 0 | 0 | 0 | 0 | — | — | — | — | — | — | — | — | — | — | — | — | — | — | — | — | TRACKING SERVO OFF SLED SERVO OFF |
| Register | Command | Address | | | Data 1 | | Data 2 | | | | Data 3 | | | | Data 4 | | | | Data 5 | | | | |
| | | D23 to D20 | D19 | D18 | D17 | D16 | D15 | D14 | D13 | D12 | D11 | D10 | D9 | D8 | D7 | D6 | D5 | D4 | D3 | D2 | D0 | D0 | |
| 3 | SELECT | 0011 | 0 | 0 | 0 | 0 | — | — | — | — | — | — | — | — | — | — | — | — | — | — | — | — | SLED KICK LEVEL (±1 + basic value) (Default) |
| | | Address 1 | | | | | Address 2 | | | | Address 3 | | | | Data 1 | | | | Data 2 | | | | |
| | | D23 to D20 | D19 | D18 | D17 | D16 | D15 | D14 | D13 | D12 | D11 | D10 | D9 | D8 | D7 | D6 | D5 | D4 | D3 | D2 | D0 | D0 | |
| | | 0011 | 0 | 1 | 0 | 0 | 0 | See the coefficient preset values table. | | | | | | | | | | | | | | | KRAM DATA ($3400XX to $344fXX) |

—: Don't care



8396383 0015339 T82

## Command Preset Table ($34FX to 3FX)

| Register | Command | Address 1 | | | | | Address 2 | | | | | | Data 1 | | Data 2 | | | | Data 3 | | | | |
|---|---|---|---|---|---|---|---|---|---|---|---|---|---|---|---|---|---|---|---|---|---|---|---|
| | | D23 to D20 | D19 | D18 | D17 | D16 | D15 | D14 | D13 | D12 | D11 | D10 | D9 | D8 | D7 | D6 | D5 | D4 | D3 | D2 | D1 | D0 | |
| 3 | SELECT | 0011 | 0 | 1 | 0 | 0 | 1 | 1 | 1 | 1 | 0 | 1 | 0 | 0 | 0 | 0 | 0 | 0 | 0 | 0 | 0 | — | FOCUS BIAS DATA |
| | | 0011 | 0 | 1 | 0 | 0 | 1 | 1 | 1 | 1 | 0 | 0 | 0 | 0 | 0 | 0 | 0 | 0 | 0 | 0 | 0 | 0 | TRVSC DATA |
| | | Address | | | | | Data 1 | | | | Data 2 | | | | Data 3 | | | | Data 4 | | | | |
| | | D23 to D20 | D19 | D18 | D17 | D16 | D15 | D14 | D13 | D12 | D11 | D10 | D9 | D8 | D7 | D6 | D5 | D4 | D3 | D2 | D1 | D0 | |
| | | 0011 | 0 | 1 | 0 | 1 | 0 | 1 | 0 | 1 | 1 | 0 | 0 | 0 | 0 | 0 | 1 | 0 | 1 | 1 | 0 | 1 | FOCUS SEARCH SPEED/ VOLTAGE/AUTO GAIN |
| | | | 0 | 1 | 1 | 0 | 0 | 0 | 0 | 0 | 1 | 1 | 1 | 0 | 0 | 0 | 1 | 0 | 1 | 1 | 1 | 0 | DTZC/TRACK JUMP VOLTAGE/AUTO GAIN |
| | | | 0 | 1 | 1 | 1 | 0 | 1 | 0 | 1 | 0 | 0 | 0 | 0 | 1 | 0 | 1 | 1 | 1 | 0 | 1 | 0 | FZSL/SLED MOVE/ Voltage/AUTO GAIN |
| | | | 1 | 0 | 0 | 0 | 0 | 0 | 0 | 0 | 0 | 0 | 0 | 0 | 0 | 0 | 0 | 0 | 0 | 0 | 0 | 0 | LEVEL/AUTO GAIN/ DFSW/ (Initialize) |
| | | | 1 | 0 | 0 | 1 | 0 | 0 | 0 | 0 | 0 | 0 | 0 | 0 | 0 | 0 | 0 | 0 | 0 | 0 | 0 | 0 | SERIAL DATA READ MODE/SELECT |
| | | | 1 | 0 | 1 | 0 | 0 | 0 | 0 | 0 | 0 | 0 | 0 | 0 | 0 | 0 | 0 | 0 | 0 | 0 | 0 | 0 | FOCUS BIAS |
| | | | 1 | 0 | 1 | 1 | 1 | 1 | 1 | 0 | 0 | 0 | 0 | 0 | 0 | 1 | 0 | 1 | 0 | 0 | 0 | 0 | Operation for MIRR/ DFCT/FOK |
| | | Address | | | | | Data 1 | | | | Data 2 | | | | Data 3 | | | | Data 4 | | | | |
| | | D23 to D20 | D19 | D18 | D17 | D16 | D15 | D14 | D13 | D12 | D11 | D10 | D9 | D8 | D7 | D6 | D5 | D4 | D3 | D2 | D1 | D0 | |
| | | 0011 | 1 | 1 | 0 | 0 | — | — | — | — | — | — | — | — | — | — | — | — | — | — | — | — | TZC for COUT SLCT HPTZC |
| | | Address | | | | | Data 1 | | | | Data 2 | | | | Data 3 | | | | Data 4 | | | | |
| | | D23 to D20 | D19 | D18 | D17 | D16 | D15 | D14 | D13 | D12 | D11 | D10 | D9 | D8 | D7 | D6 | D5 | D4 | D3 | D2 | D1 | D0 | |
| | | 0001 | 1 | 1 | 1 | 0 | 0 | 0 | 0 | 0 | 0 | 0 | 0 | 0 | 0 | 0 | 0 | 0 | 0 | 0 | 0 | 0 | Filter |
| | | | 1 | 1 | 1 | 1 | 0 | 0 | 0 | 0 | 0 | 0 | 0 | 0 | 0 | 0 | 0 | 0 | 0 | 0 | 0 | 0 | Others |

—: Don't care



8382383 0015340 71h

## Command Preset Table ($4X to EX)

| Register | Command | Address | Data 1 | | | | Data 2 | | | | Data 3 | | | | Data 4 | | | | Data 5 | | | |
|---|---|---|---|---|---|---|---|---|---|---|---|---|---|---|---|---|---|---|---|---|---|---|
| | | D23 to D20 | D19 | D18 | D17 | D16 | D15 | D14 | D13 | D12 | D11 | D10 | D9 | D8 | D7 | D6 | D5 | D4 | D3 | D2 | D1 | D0 |
| 4 | Auto sequence | 0 1 0 0 | 0 | 0 | 0 | 0 | 0 | 0 | 0 | 0 | 0 | 0 | 0 | 0 | — | — | — | — | — | — | — | — |
| 5 | Blind (A, E), Brake (B), Overflow (C, D) | 0 1 0 1 | 0 | 1 | 0 | 1 | 0 | 0 | 0 | 0 | 0 | 0 | 0 | 0 | — | — | — | — | — | — | — | — |
| 6 | Sled kick, brake (D), Kick (F) | 0 1 1 0 | 0 | 1 | 1 | 1 | 0 | 0 | 0 | 0 | 0 | 0 | 0 | 0 | — | — | — | — | — | — | — | — |
| 7 | Auto sequence (N) track jump count setting | 0 1 1 1 | 0 | 0 | 0 | 0 | 0 | 0 | 0 | 1 | 0 | 0 | 0 | 0 | 0 | 0 | 0 | 0 | — | — | — | — |
| 8 | MODE setting | 1 0 0 0 | 0 | 0 | 0 | 0 | 0 | 0 | 0 | 0 | 0 | 0 | 0 | 0 | — | — | — | — | — | — | — | — |
| 9 | Function specification | 1 0 0 1 | 1 | 0 | 0 | 1 | 0 | 0 | 0 | 0 | 0 | 0 | 0 | 0 | — | — | — | — | — | — | — | — |
| A | Audio CTRL | 1 0 1 0 | 0 | 0 | 1 | 1 | 0 | 0 | 0 | 0 | 0 | 0 | 0 | 0 | — | — | — | — | — | — | — | — |
| B | Traverse monitor counter setting | 1 0 1 1 | 0 | 0 | 0 | 0 | 0 | 0 | 0 | 1 | 0 | 0 | 0 | 0 | 0 | 0 | 0 | 0 | — | — | — | — |
| C | Spindle servo coefficient setting | 1 1 0 0 | 0 | 1 | 1 | 0 | 0 | 0 | 0 | 0 | 0 | 0 | 0 | 0 | — | — | — | — | — | — | — | — |
| D | CLV CTRL | 1 1 0 1 | 0 | 0 | 0 | 0 | 0 | 0 | 0 | 0 | 0 | 0 | 0 | 0 | — | — | — | — | — | — | — | — |
| E | CLV MODE | 1 1 1 0 | 0 | 0 | 0 | 0 | 0 | 0 | 0 | 0 | 0 | 0 | 0 | 0 | — | — | — | — | — | — | — | — |

—: Don't care



8382383 0015341 630

**<Coefficient ROM Preset Values Table (1)>**

| ADDRESS | DATA | CONTENTS |
|---|---|---|
| K00 | E0 | SLED INPUT GAIN |
| K01 | 81 | SLED LOW BOOST FILTER A-H |
| K02 | 23 | SLED LOW BOOST FILTER A-L |
| K03 | 7F | SLED LOW BOOST FILTER B-H |
| K04 | 6A | SLED LOW BOOST FILTER B-L |
| K05 | 10 | SLED OUTPUT GAIN |
| K06 | 14 | FOCUS INPUT GAIN |
| K07 | 30 | SLED AUTO GAIN |
| K08 | 7F | FOCUS HIGH CUT FILTER A |
| K09 | 46 | FOCUS HIGH CUT FILTER B |
| K0A | 81 | FOCUS LOW BOOST FILTER A-H |
| K0B | 1C | FOCUS LOW BOOST FILTER A-L |
| K0C | 7F | FOCUS LOW BOOST FILTER B-H |
| K0D | 58 | FOCUS LOW BOOST FILTER B-L |
| K0E | 82 | FOCUS PHASE COMPENSATE FILTER A |
| K0F | 7F | FOCUS DEFECT HOLD GAIN |
| K10 | 4E | FOCUS PHASE COMPENSATE FILTER B |
| K11 | 32 | FOCUS OUTPUT GAIN |
| K12 | 20 | ANTI SHOCK INPUT GAIN |
| K13 | 30 | FOCUS AUTO GAIN |
| K14 | 80 | HPTZC / Auto Gain HIGH PASS FILTER A |
| K15 | 77 | HPTZC / Auto Gain HIGH PASS FILTER B |
| K16 | 80 | ANTI SHOCK HIGH PASS FILTER A |
| K17 | 77 | HPTZC / Auto Gain LOW PASS FILTER B |
| K18 | 00 | Fix* |
| K19 | F1 | TRACKING INPUT GAIN |
| K1A | 7F | TRACKING HIGH CUT FILTER A |
| K1B | 3B | TRACKING HIGH CUT FILTER B |
| K1C | 81 | TRACKING LOW BOOST FILTER A-H |
| K1D | 44 | TRACKING LOW BOOST FILTER A-L |
| K1E | 7F | TRACKING LOW BOOST FILTER B-H |
| K1F | 5E | TRACKING LOW BOOST FILTER B-L |
| K20 | 82 | TRACKING PHASE COMPENSATE FILTER A |
| K21 | 44 | TRACKING PHASE COMPENSATE FILTER B |
| K22 | 18 | TRACKING OUTPUT GAIN |
| K23 | 30 | TRACKING AUTO GAIN |
| K24 | 7F | FOCUS GAIN DOWN HIGH CUT FILTER A |
| K25 | 46 | FOCUS GAIN DOWN HIGH CUT FILTER B |
| K26 | 81 | FOCUS GAIN DOWN LOW BOOST FILTER A-H |
| K27 | 3A | FOCUS GAIN DOWN LOW BOOST FILTER A-L |
| K28 | 7F | FOCUS GAIN DOWN LOW BOOST FILTER B-H |
| K29 | 66 | FOCUS GAIN DOWN LOW BOOST FILTER B-L |
| K2A | 82 | FOCUS GAIN DOWN PHASE COMPENSATE FILTER A |
| K2B | 44 | FOCUS GAIN DOWN DEFECT HOLD GAIN |
| K2C | 4E | FOCUS GAIN DOWN PHASE COMPENSATE FILTER B |
| K2D | 1B | FOCUS GAIN DOWN OUTPUT GAIN |
| K2E | 00 | NOT USED |
| K2F | 00 | NOT USED |



8382383 0015342 577

**<Coefficient ROM Preset Values Table (2)>**

| ADDRESS | DATA | CONTENTS |
|---|---|---|
| K30 | 80 | Fix* |
| K31 | 66 | ANTI SHOCK LOW PASS FILTER B |
| K32 | 00 | NOT USED |
| K33 | 7F | ANTI SHOCK HIGH PASS FILTER B-H |
| K34 | 6E | ANTI SHOCK HIGH PASS FILTER B-L |
| K35 | 20 | ANTI SHOCK FILTER COMPARATE GAIN |
| K36 | 7F | TRACKING GAIN UP2 HIGH CUT FILTER A |
| K37 | 3B | TRACKING GAIN UP2 HIGH CUT FILTER B |
| K38 | 80 | TRACKING GAIN UP2 LOW BOOST FILTER A-H |
| K39 | 44 | TRACKING GAIN UP2 LOW BOOST FILTER A-L |
| K3A | 7F | TRACKING GAIN UP2 LOW BOOST FILTER B-H |
| K3B | 77 | TRACKING GAIN UP2 LOW BOOST FILTER B-L |
| K3C | 86 | TRACKING GAIN UP PHASE COMPENSATE FILTER A |
| K3D | 0D | TRACKING GAIN UP PHASE COMPENSATE FILTER B |
| K3E | 57 | TRACKING GAIN UP OUTPUT GAIN |
| K3F | 00 | NOT USED |
| K40 | 04 | TRACKING HOLD FILTER INPUT GAIN |
| K41 | 7F | TRACKING HOLD FILTER A-H |
| K42 | 7F | TRACKING HOLD FILTER A-L |
| K43 | 79 | TRACKING HOLD FILTER B-H |
| K44 | 17 | TRACKING HOLD FILTER B-L |
| K45 | 6D | TRACKING HOLD FILTER OUTPUT GAIN |
| K46 | 00 | NOT USED |
| K47 | 00 | NOT USED |
| K48 | 02 | FOCUS HOLD FILTER INPUT GAIN |
| K49 | 7F | FOCUS HOLD FILTER A-H |
| K4A | 7F | FOCUS HOLD FILTER A-L |
| K4B | 79 | FOCUS HOLD FILTER B-H |
| K4C | 17 | FOCUS HOLD FILTER B-L |
| K4D | 54 | FOCUS HOLD FILTER OUTPUT GAIN |
| K4E | 00 | NOT USED |
| K4F | 00 | NOT USED |

* Fix indicates that normal preset values should be used.



8382383 0015343 403

## §1-4. Description of SENS Signals

### SENS output

| Microcomputer serial register (latching not required) | ASEQ = 0 | ASEQ = 1 | Output data length |
|---|---|---|---|
| $0X | Z | FZC | — |
| $1X | Z | AS | — |
| $2X | Z | TZC | — |
| $38 | Z | AGOK*1 | — |
| $38 | Z | XAVEBSY*1 | — |
| $30 to 37, $3A to 3F | Z | SSTP | — |
| $3904 | Z | TE Avrg Reg. | 9 bit |
| $3908 | Z | FE Avrg Reg. | 9 bit |
| $390C | Z | VC Avrg Reg. | 9 bit |
| $391C | Z | TRVSC Reg. | 9 bit |
| $391D | Z | FB Reg. | 9 bit |
| $391F | Z | RFDC Avrg Reg. | 8 bit |
| $4X | Z | XBUSY | — |
| $5X | Z | FOK | — |
| $6X | Z | 0 | — |
| $AX | GFS | GFS | — |
| $BX | COMP | COMP | — |
| $CX | COUT | COUT | — |
| $EX | $\overline{OV64}$ | $\overline{OV64}$ | — |
| $7X, 8X, 9X, DX, FX | Z | 0 | — |

*1 $38 outputs AGOK during AGT and AGF command settings, and XAVEBSY during AVRG measurement. SSTP is output in all other cases.



8382383 0015344 34T

**Description of SENS Signals**

| SENS output | |
|---|---|
| Z | The SENS pin is high impedance. |
| XBUSY | Low while the auto sequencer is in operation, high when operation terminates. |
| FOK | Outputs the same signal as the FOK pin.<br>High for "focus OK". |
| GFS | High when the regenerated frame sync is obtained with the correct timing. |
| COMP | Counts the number of tracks set with Reg B.<br>High when Reg B is latched, low when the initial Reg B number is input by CNIN. |
| COUT | Counts the number of tracks set with Reg B.<br>High when Reg B is latched, toggles each time the Reg B number is input by CNIN. While $44 and $45 are being executed, toggles with each CNIN 8-count instead of the Reg B number. |
| $\overline{OV64}$ | Low when the EFM signal, after passing through the sync detection filter, is lengthened by 64 channel clock pulses or more. |



8382383 0015345 286

## [2] Description of CD Signal Processing-System Commands and Functions

### §2-1. Description of Commands and Data Sets

#### $4X commands

| Register name | Data 1 | | | | Data 2 | | | | Data 3 | | | |
|---|---|---|---|---|---|---|---|---|---|---|---|---|
| 4 | Command | | | | MAX timer value | | | | Timer range | | | |
| | AS3 | AS2 | AS1 | AS0 | MT3 | MT2 | MT1 | MT0 | LSSL | 0 | 0 | 0 |

| Command | AS3 | AS2 | AS1 | AS0 |
|---|---|---|---|---|
| Cancel | 0 | 0 | 0 | 0 |
| Fine Search | 0 | 1 | 0 | RXF |
| Focus-On | 0 | 1 | 1 | 1 |
| 1 Track Jump | 1 | 0 | 0 | RXF |
| 10 Track Jump | 1 | 0 | 1 | RXF |
| 2N Track Jump | 1 | 1 | 0 | RXF |
| M Track Move | 1 | 1 | 1 | RXF |

RXF = 0 Forward
RXF = 1 Reverse

- When the Focus-on command ($47) is canceled, $02 is sent and the auto sequence is interrupted.
- When the Track jump commands ($44 to $45, $48 to $4D) are canceled, $25 is sent and the auto sequence is interrupted.

| Cancel timer value | | | | Timer range | | | |
|---|---|---|---|---|---|---|---|
| MT3 | MT2 | MT1 | MT0 | LSSL | 0 | 0 | 0 |
| 23.2ms | 11.6ms | 5.8ms | 2.9ms | 0 | 0 | 0 | 0 |
| 1.49s | 0.74s | 0.37s | 0.18s | 1 | 0 | 0 | 0 |

- To invalidate the MAX timer, set $4X0 and the timer value to 0.

#### $5X commands

| Timer | TR3 | TR2 | TR1 | TR0 |
|---|---|---|---|---|
| Blind (A, E), Overflow (C, G) | 0.18ms | 0.09ms | 0.045ms | 0.022ms |
| Brake (B) | 0.36ms | 0.18ms | 0.09ms | 0.045ms |



8382383 0015346 112

**$6X commands**

| Register name | Data 1 | | | | Data 2 | | | |
|---|---|---|---|---|---|---|---|---|
| 6 | KICK (D) | | | | KICK (F) | | | |
| | SD3 | SD2 | SD1 | SD0 | KF3 | KF2 | KF1 | KF0 |

| Timer | SD3 | SD2 | SD1 | SD0 |
|---|---|---|---|---|
| When executing KICK (D) $44 or $45 | 23.2ms | 11.6ms | 5.8ms | 2.9ms |
| When executing KICK (D) $4C or $4D | 11.6ms | 5.8ms | 2.9ms | 1.45ms |

| Timer | KF3 | KF2 | KF1 | KF0 |
|---|---|---|---|---|
| KICK (F) | 0.72ms | 0.36ms | 0.18ms | 0.09ms |

**$7X commands**

Auto sequence track jump count setting

| Command | Data 1 | | | | Data 2 | | | | Data 3 | | | | Data 4 | | | |
|---|---|---|---|---|---|---|---|---|---|---|---|---|---|---|---|---|
| | D19 | D18 | D17 | D16 | D15 | D14 | D13 | D12 | D11 | D10 | D9 | D8 | D7 | D6 | D5 | D4 |
| Auto sequence track jump count setting | $2^{15}$ | $2^{14}$ | $2^{13}$ | $2^{12}$ | $2^{11}$ | $2^{10}$ | $2^{9}$ | $2^{8}$ | $2^{7}$ | $2^{6}$ | $2^{5}$ | $2^{4}$ | $2^{3}$ | $2^{2}$ | $2^{1}$ | $2^{0}$ |

This command is used to set N when a 2N-track jump is executed, M when an M track move is executed and the jump count when a fine search is executed for auto sequence.

- The maximum track count is 65,535, but note that with a 2N-track jump the maximum track jump count is determined by the mechanical limitations of the optical system.
- When the track jump count is from 0 to 15, the COUT signal is used to count tracks for 2N-track jump/M track move; when the count is 16 or over, the MIRR signal is used. For fine search, the COUT signal is used to count tracks.

**$8X commands**

| Command | Data 1 | | | | Data 2 | | | |
|---|---|---|---|---|---|---|---|---|
| | D19 | D18 | D17 | D16 | D15 | D14 | D13 | D12 |
| MODE specification | CDROM | DOUT Mute | D.out Mute-F | WSEL | VCO SEL | ASHS | SOCT | 0 |

| Command bit | C2PO timing | Processing |
|---|---|---|
| CDROM = 1 | See the Timing Chart 2-1. | CDROM mode; average value interpolation and pre-value hold are not performed. |
| CDROM = 0 | See the Timing Chart 2-1. | Audio mode; average value interpolation and pre-value hold are performed. |

| Command bit | Processing |
|---|---|
| DOUT Mute = 1 | When Digital Out is on (MD2 pin = 1), DOUT output is muted. |
| DOUT Mute = 0 | When Digital Out is on, DOUT output is not muted. |

| Command bit | Processing |
|---|---|
| D. out Mute F = 1 | When Digital Out is on (MD2 pin = 1), DA output is muted. |
| D. out Mute F = 0 | DA output mute is not affected when Digital Out is either on or off. |



8382383 0015347 059

| MD2 | Other mute conditions* | DOUT Mute | D.out Mute F | DOUT output | DA output |
|---|---|---|---|---|---|
| 0 | 0 | 0 | 0 | off | 0dB |
| 0 | 0 | 0 | 1 | | |
| 0 | 0 | 1 | 0 | | |
| 0 | 0 | 1 | 1 | | |
| 0 | 1 | 0 | 0 | | −∞dB |
| 0 | 1 | 0 | 1 | | |
| 0 | 1 | 1 | 0 | | |
| 0 | 1 | 1 | 1 | | |
| 1 | 0 | 0 | 0 | 0dB | 0dB |
| 1 | 0 | 0 | 1 | | −∞dB |
| 1 | 0 | 1 | 0 | −∞dB | 0dB |
| 1 | 0 | 1 | 1 | | −∞dB |
| 1 | 1 | 0 | 0 | | |
| 1 | 1 | 0 | 1 | | |
| 1 | 1 | 1 | 0 | | |
| 1 | 1 | 1 | 1 | | |

* See mute conditions (1), (2) and (4) to (6) under $AX commands for other mute conditions.

| Command bit | Sync protection window width | Application |
|---|---|---|
| WSEL = 1 | ±26 channel clock* | Anti-rolling is enhanced. |
| WSEL = 0 | ±6 channel clock | Sync window protection is enhanced. |

* In normal-speed playback, the channel clock=4.3218MHz

| Command bit | Processing | Use |
|---|---|---|
| VCOSEL = 0 | The built-in VCO is set to normal speed. | Used for normal-speed and double-speed (double correction) playback. |
| VCOSEL = 1 | The built-in VCO is set to high speed. | Used for quadruple-speed and double-speed (quadruple correction) playback. |

| Command bit | Function | Use |
|---|---|---|
| ASHS = 0 | The command transfer rate to SSP is set to normal speed. | Used for normal-speed and double-speed (double correction) playback. |
| ASHS = 1 | The command transfer rate to SSP is set to half speed. | Used for quadruple-speed and double-speed (quadruple correction) playback. |

| Command bit | Function |
|---|---|
| SOCT = 0 | Sub Q is output from the SQSO pin. |
| SOCT = 1 | Each signal is output from the SQSO pin. Input the readout clock to SQCK. (See the Timing Chart 2-11.) |



8382383 0015348 T95

**$9X commands**

| Command | Data 1 | | | | Data 2 | | | |
|---|---|---|---|---|---|---|---|---|
| | D19 | D18 | D17 | D16 | D15 | D14 | D13 | D12 |
| Function specification | DCLV ON-OFF | DSPB ON-OFF | A.SEQ ON-OFF | D.PLL ON-OFF | BiliGL MAIN | BiliGL SUB | FLFC | 0 |

| Command bit | CLV mode | Contents | |
|---|---|---|---|
| DCLV on/off=0 | During CLVS mode | FSW = low, MON = high, MDS = Z; MDP = servo control signal, carrier frequency of 230Hz at $T_B$ = 0 and 460Hz at $T_B$ = 1. | |
| | During CLVP mode | FSW = Z, MON = high; MDS = speed control signal, carrier frequency of 7.35kHz; MDP = phase control signal, carrier frequency of 1.8kHz. | |
| DCLV on/off = 1 (FSW, MON not required) | During CLVS and CLVP modes | When DCLV, PWM and MD = 1 | MDS = PWM polarity signal, carrier frequency of 132kHz<br>MDP = PWM absolute value output (binary), carrier frequency of 132kHz |
| | | When DCLV, PWM and MD = 0 | MDS = Z<br>MDP = ternary PWM output, carrier frequency of 132kHz |

When DCLV on/off = 1 for the Digital CLV servo, the sampling frequency of the internal digital filter switches simultaneously with the CLVP/CLVS switching.
Therefore, the cut-off frequency for the CLVS is fc = 70Hz at $T_B$ = 0, and fc = 140Hz at $T_B$ = 1.

| Command bit | Processing |
|---|---|
| DSPB = 0 | Normal-speed playback, C2 error quadruple correction, variable pitch possible. |
| DSPB = 1 | Double-speed playback, C2 error double correction, variable pitch prohibited. |

Normally, FLFC is 0.

| Command bit | Meaning |
|---|---|
| DPLL = 0* | RFPLL is analog. PDO, VCOI and VCOO are used. |
| DPLL = 1 | RFPLL is digital. PDO is high impedance. |

* External parts for Pins 18 to 20 are required even when analog PLL is selected.

| Command bit | BiliGL MAIN = 0 | BiliGL MAIN = 1 |
|---|---|---|
| BiliGL SUB = 0 | STEREO | MAIN |
| BiliGL SUB = 1 | SUB | Mute |

Definition of bilingual capable MAIN, SUB and STEREO

The left channel input is output to the left and right channels for MAIN.

The right channel input is output to the left and right channels for SUB.

The left and right channel inputs are output to the left and right channels for STEREO.



8382383 0015349 921

**$AX commands**

| Command | Data 1 | | | | Data 2 | | | |
|---|---|---|---|---|---|---|---|---|
| | D19 | D18 | D17 | D16 | D15 | D14 | D13 | D12 |
| Audio CTRL | Vari Up | Vari Down | Mute | ATT | PCT1 | PCT2 | 0 | 0 |

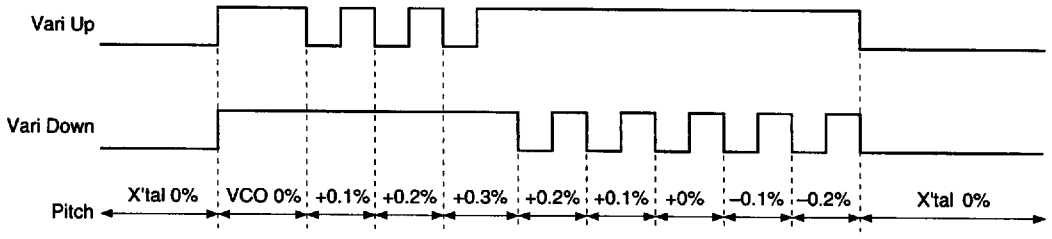


| Command bit | Meaning |
|---|---|
| Mute = 0 | Mute off if other mute conditions are not set. |
| Mute = 1 | Mute on. Peak register reset. |

| Command bit | Meaning |
|---|---|
| ATT = 0 | Attenuation off |
| ATT = 1 | –12dB |

**Mute conditions**

(1) When register A mute = 1.
(2) When Mute pin = 1.
(3) When register 8 D.out Mute F = 1 and the Digital Out is on (MD2 pin = 1).
(4) When GFS stays low for over 35ms (during normal-speed).
(5) When register 9 BiliGL MAIN = Sub = 1.
(6) When register A PCT1 = 1 and PCT2 = 0.

(1) to (4) perform zero-cross muting with a 1 ms time limit.

| Command bit | | Meaning | PCM Gain | ECC error correction ability |
|---|---|---|---|---|
| PCT1 | PCT2 | | | |
| 0 | 0 | Normal mode | × 0dB | C1: double; C2: quadruple |
| 0 | 1 | Level meter mode | × 0dB | C1: double; C2: quadruple |
| 1 | 0 | Peak meter mode | Mute | C1: double; C2: double |
| 1 | 1 | Normal mode | × 0dB | C1: double; C2: double |

**Description of level meter mode** (see the Timing Chart 2-2.)

- When the LSI is set to this mode, it can possess digital level meter functions.
- When the 96-bit clock is input to SQCK, 96 bits of data are output to SQSO.
  The initial 80 bits of data are Sub Q data (see §2-2. Subcode Interface). The last 16 bits are LSB first, 15-bit PCM data (absolute values).
  The final bit is PCM data. However, it is high when generated by the left channel and low when generated by the right channel.
- PCM data is reset and the L/R flag is reversed after one readout.
  The maximum value for this status is then measured until the next readout.



8382383 0015350 643

**Description of peak meter mode** (see the Timing Chart 2-3.)

- When the LSI is set to this mode, the maximum PCM data value is detected regardless of if it comes from the left or right channel.
  The 96-bit clock must be input to SQCK to read out this data.
- When the 96-bit clock is input, 96 bits of data are output to SQSO and the LSI internal register is reset.
  In other words, the PCM maximum value detection register is not reset by the readout.
- To reset the PCM maximum value detection register, set PCT1 = PCT2 = 0 or set the $AX mute.
- The Sub Q absolute time is automatically controlled in this mode.
  In other words, after the maximum value is generated, the absolute time for CRC to become OK is retained in the memory. The normal operation is conducted for the relative time.
- The final bit (L/R flag) of the 96-bit data is normally 0.
- The pre-value hold and average value interpolation data are fixed to level (−∞) for this mode.

**$BX commands**

This command sets the traverse monitor count.

| Command | Data 1 | | | | Data 2 | | | | Data 3 | | | | Data 4 | | | |
|---|---|---|---|---|---|---|---|---|---|---|---|---|---|---|---|---|
| | D19 | D18 | D17 | D16 | D15 | D14 | D13 | D12 | D11 | D10 | D9 | D8 | D7 | D6 | D5 | D4 |
| Traverse monitor count setting | $2^{15}$ | $2^{14}$ | $2^{13}$ | $2^{12}$ | $2^{11}$ | $2^{10}$ | $2^{9}$ | $2^{8}$ | $2^{7}$ | $2^{6}$ | $2^{5}$ | $2^{4}$ | $2^{3}$ | $2^{2}$ | $2^{1}$ | $2^{0}$ |

- When the set number of tracks are counted during fine search, the sled control for the traverse cycle control goes off.
- The traverse monitor count is set when the traverse status is monitored by the SENS output COMP and COUT.

**$CX commands**

| Command | Data 1 | | | | Data 2 | | | | Explanation |
|---|---|---|---|---|---|---|---|---|---|
| | D19 | D18 | D17 | D16 | D15 | D14 | D13 | D12 | |
| Servo coefficient setting | Gain MDP1 | Gain MDP0 | Gain MDS1 | Gain MDS0 | 0 | Gain DCLV0 | 0 | 0 | Valid only when DCLV = 1. |
| CLV CTRL ($DX) | | | | Gain CLVS | | | | | Valid when DCLV = 1 or 0. |

The spindle servo gain is externally set when DCLV = 1.

- CLVS mode gain setting: GCLVS

| Gain MDS1 | Gain MDS0 | Gain CLVS | GCLVS |
|---|---|---|---|
| 0 | 0 | 0 | −12dB |
| 0 | 0 | 1 | −6dB |
| 0 | 1 | 0 | −6dB |
| 0 | 1 | 1 | 0dB |
| 1 | 0 | 0 | 0dB |
| 1 | 0 | 1 | +6dB |

**Note)** When DCLV = 0, the CLVS gain is as follows:
When Gain CLVS = 0, GCLVS = −12dB.
When Gain CLVS = 1, GCLVS = 0dB.



8382383 0015351 58T

• CLVP mode gain setting: GMDP: GMDS

| Gain MDP1 | Gain MDP0 | GMDP |
|---|---|---|
| 0 | 0 | –6dB |
| 0 | 1 | 0dB |
| 1 | 0 | +6dB |

| Gain MDS1 | Gain MDS0 | GMDS |
|---|---|---|
| 0 | 0 | –6dB |
| 0 | 1 | 0dB |
| 1 | 0 | +6dB |

• DCLV overall gain setting: GDCLV

| Gain DCLV0 | GDCLV |
|---|---|
| 0 | 0dB |
| 1 | +6dB |

**$DX commands**

| Command | D19 | D18 | D17 | D16 |
|---|---|---|---|---|
| CLV CTRL | DCLV PWM MD | TB | TP | Gain CLVS |

See the $CX commands.

| Command bit | Explanation (See the Timing Chart 2-4.) |
|---|---|
| DCLV PWM MD = 1 | Digital CLV PWM mode specified. Both MDS and MDP are used. |
| DCLV PWM MD = 0 | Digital CLV PWM mode specified. Ternary MDP values are output. |

| Command bit | Explanation |
|---|---|
| TB = 0 | Bottom hold in CLVS and CLVH modes at a cycle of RFCK/32. |
| TB = 1 | Bottom hold in CLVS and CLVH modes at a cycle of RFCK/16. |
| TP = 0 | Peak hold in CLVS mode at a cycle of RFCK/4. |
| TP = 1 | Peak hold in CLVS mode at a cycle of RFCK/2. |

**Note)** Peak hold is performed at 34kHz in CLVH mode.



8382383 0015352 416

**$EX commands**

| Command | D19 | D18 | D17 | D16 |
|---|---|---|---|---|
| CLV mode | CM3 | CM2 | CM1 | CM0 |

| CM3 | CM2 | CM1 | CM0 | Mode | Explanation |
|---|---|---|---|---|---|
| 0 | 0 | 0 | 0 | STOP | See the Timing Chart 2-5. |
| 1 | 0 | 0 | 0 | KICK | See the Timing Chart 2-6. |
| 1 | 0 | 1 | 0 | BRAKE | See the Timing Chart 2-7. |
| 1 | 1 | 1 | 0 | CLVS | |
| 1 | 1 | 0 | 0 | CLVH | |
| 1 | 1 | 1 | 1 | CLVP | |
| 0 | 1 | 1 | 0 | CLVA | |

STOP: Spindle motor stop mode

KICK: Spindle motor forward rotation mode

BRAKE: Spindle motor reverse rotation mode

CLVS: Rough servo mode. When the RF-PLL circuit lock is disengaged, this mode is used to pull the disc rotations within the RF-PLL capture range.

CLVP: PLL servo mode

CLVA: Automatic CLVS/CLVP switching mode. This mode is normally used during playback.



8382383 0015353 352

**Timing Chart 2-1**

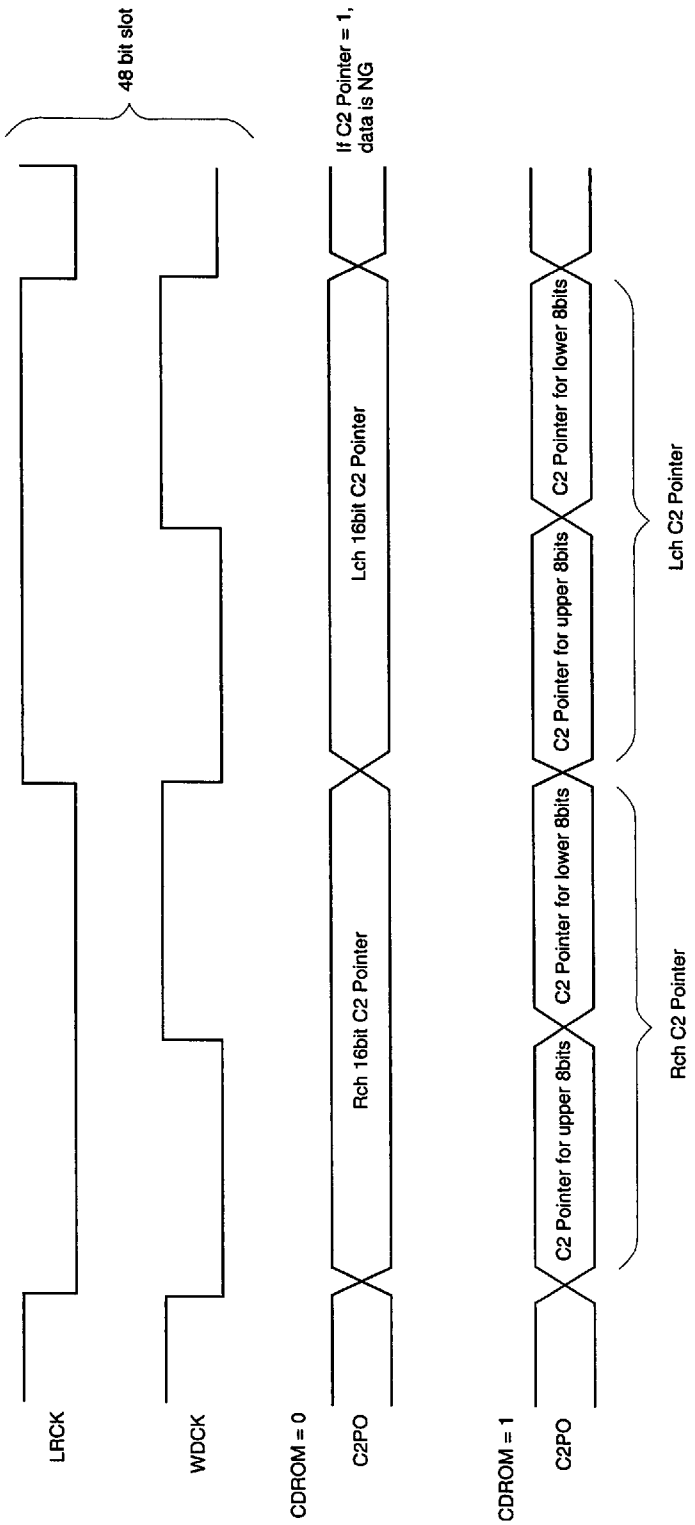




8382383 0015354 299

**Timing Chart 2-2**

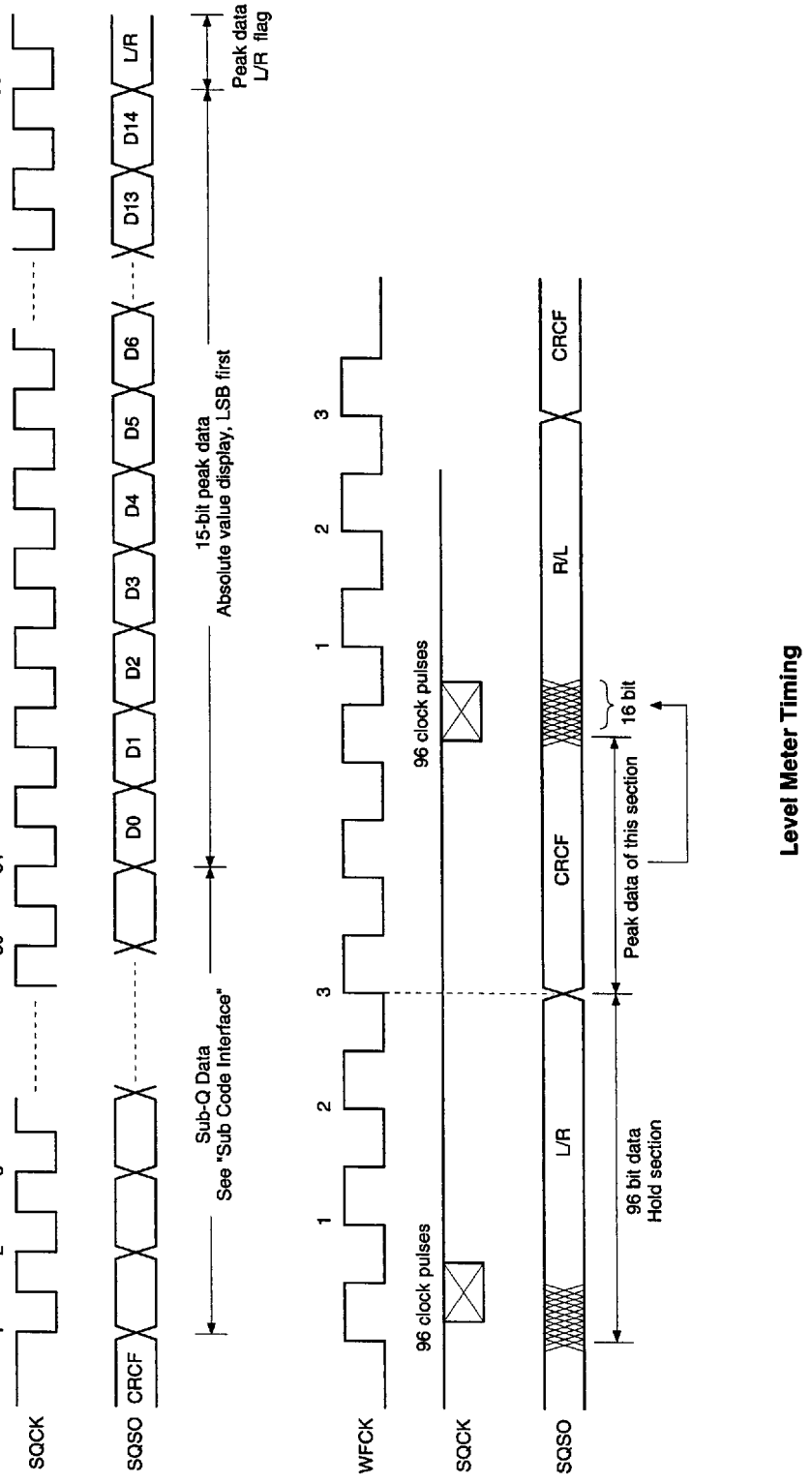


**Level Meter Timing**



8382383 0015355 125

**Timing Chart 2-3**

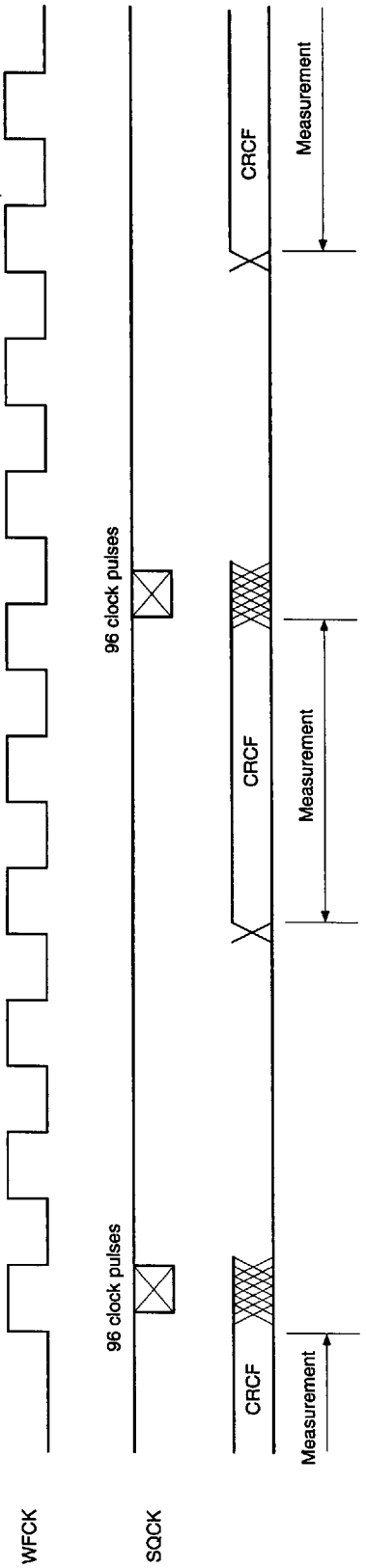


**Peak Meter Timing**



8382383 0015356 061

## Timing Chart 2-4

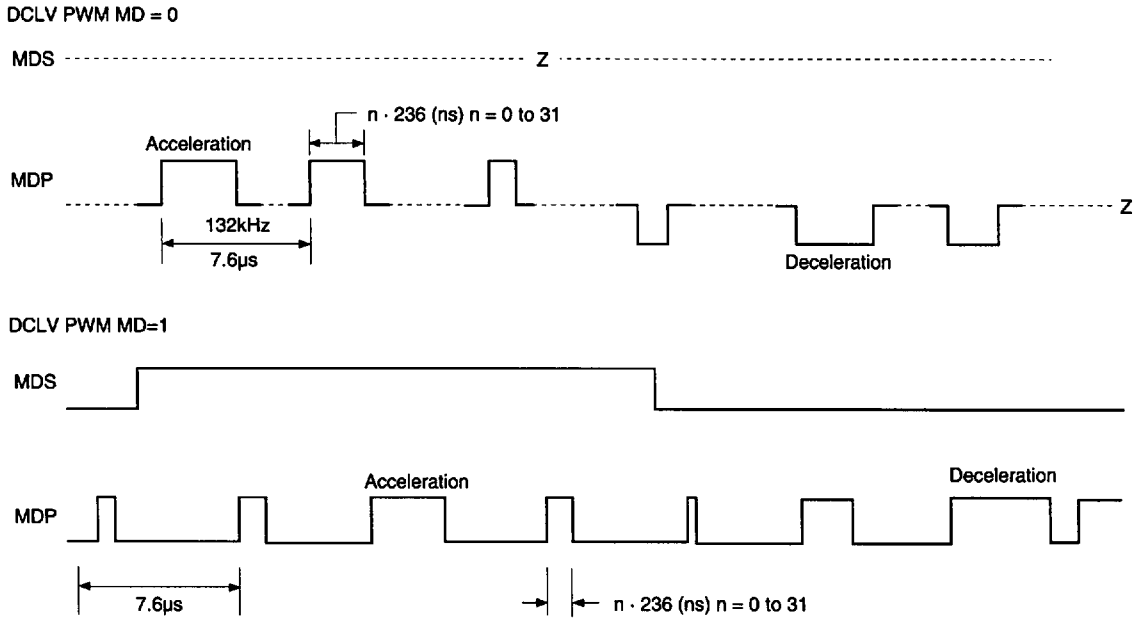


Output Waveforms with DCLV = 1

## Timing Chart 2-5

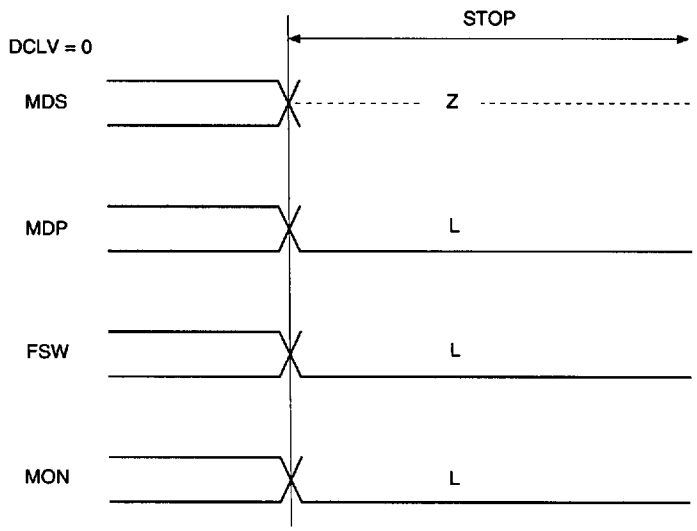


DCLV = 1 DCLV PWM MD = 0

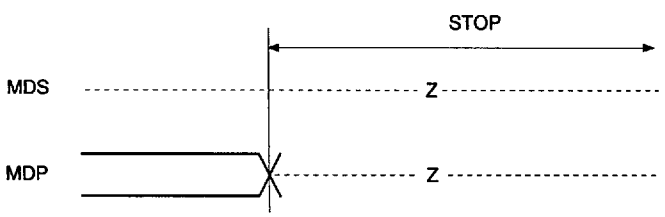


FSW and MON are the same as for DCLV = 0



8382383 0015357 TT8

DCLV = 1 DCLV PWM MD = 1

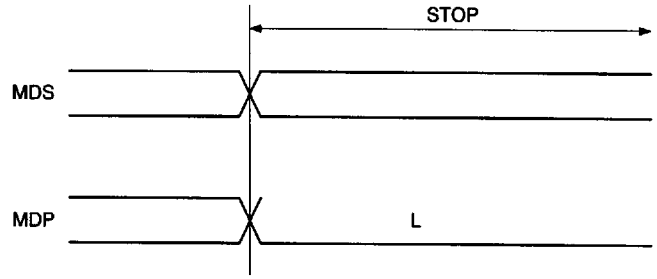


FSW and MON are the same as for DCLV = 0

**Timing Chart 2-6**

DCLV = 0

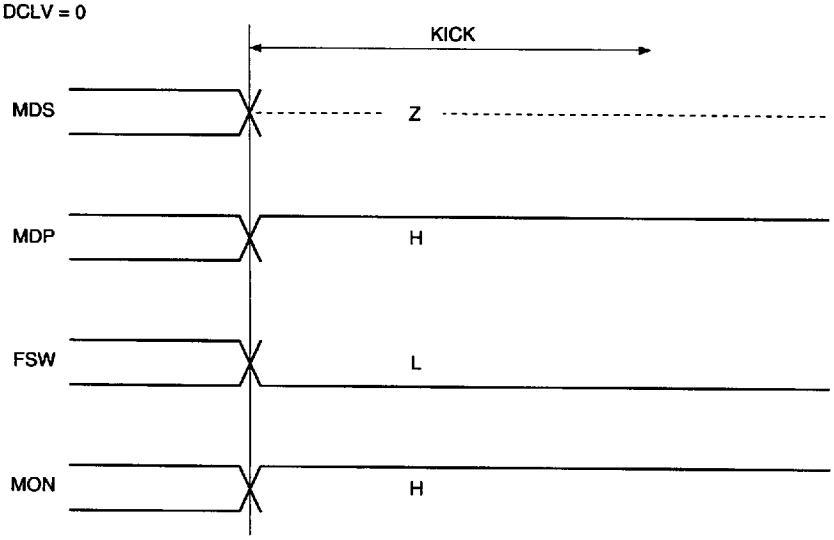


DCLV = 1 DCLV PWM MD = 0

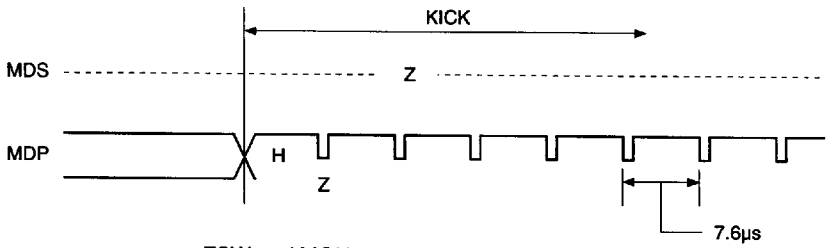


FSW and MON are the same as for DCLV = 0

DCLV = 1 DCLV PWM MD = 1

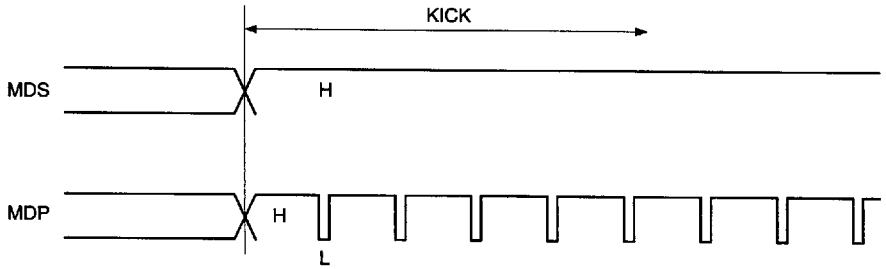


FSW and MON are the same as for DCLV = 0



8382383 0015358 934

**Timing Chart 2-7**

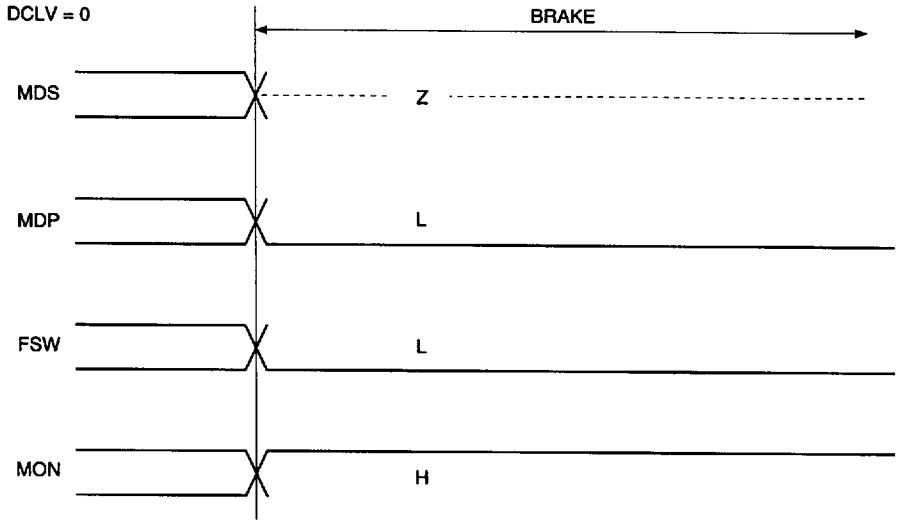


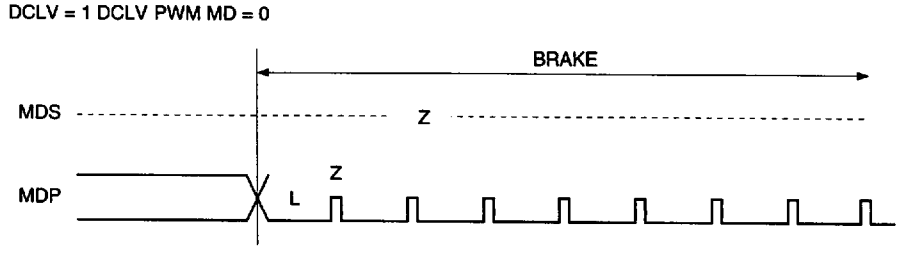


FSW and MON are the same as for DCLV = 0

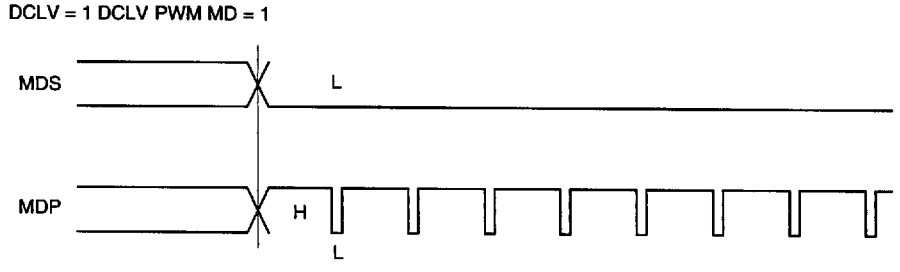


FSW and MON are the same as for DCLV = 0



8382383 0015359 870

## §2-2. Subcode Interface

This section explains the subcode interface.
There are two methods for reading out a subcode externally. The 8-bit subcodes P to W can be read from SBSO by inputting EXCK.
Sub Q can be read out after the CRC check of the 80 bits of information in the subcode frame.
This is accomplished, after checking SCOR and CRCF, by inputting 80 clock pulses to SQCK and reading data from the SQSO pin.

### P to W Subcode Read

Data can be read out by inputting EXCK immediately after WFCK falls. (See the Timing Chart 2-8.)

### 80-bit Sub Q Read

Fig. 2-9 shows the peripheral block of the 80-bit Sub Q register.

- First, Sub Q, regenerated at one bit per frame, is input to the 80-bit serial/parallel register and the CRC check circuit.
- 96-bit Sub Q is input, and if the CRC is OK, it is output to SQSO with CRCF = 1. In addition, the 80 bits are loaded into the parallel/serial register.
  When SQSO goes high after SCOR is output, the CPU determines that new data (which passed the CRC check) has been loaded.
- In the CXD2545Q, when 80-bit data is loaded, the order of the MSB and LSB is inverted for each byte. As a result, although the sequence of the bytes is the same, the bits within the bytes are now ordered LSB first.
- Once the fact that the 80-bit data has been loaded is confirmed, SQCK is input so that the data can be read. In this LSI, the SQCK input is detected, and the retriggerable monostable multivibrator for low is reset.
- The retriggerable monostable multivibrator has a time constant from 270 to 400µs. When the duration when SQCK is high is less than this time constant, the monostable multivibrator is kept reset; during this interval, the S/P register is not loaded into the P/S register.
- While the monostable multivibrator is being reset, data cannot be loaded into the peak detection parallel/serial register or the 80-bit parallel/serial register.
  In other words, while reading out with a clock cycle shorter than the monostable multivibrator time constant, the register will not be rewritten by CRCOK and others.
- In this LSI, the previously mentioned peak detection register can be connected to the shift-in of the 80-bit P/S register.
  Input and output for ring control 1 are shorted in peak meter or level meter mode.
  Those for ring 2 are shorted in peak meter mode.
  This is because the register is reset with each readout in level meter mode, and to prevent readout destruction in peak meter mode.
  As a result, the 96-bit clock must be input in peak meter mode.
- In addition, as previously mentioned, the absolute time after peak is generated is stored in the memory in peak meter mode. (See the Timing Chart 2-10.)
- Although a clock is input from the SQCK pin to actually perform these operations, the high and low intervals for this clock should be between 750ns and 120µs.



8382383 0015360 592

## Timing Chart 2-8

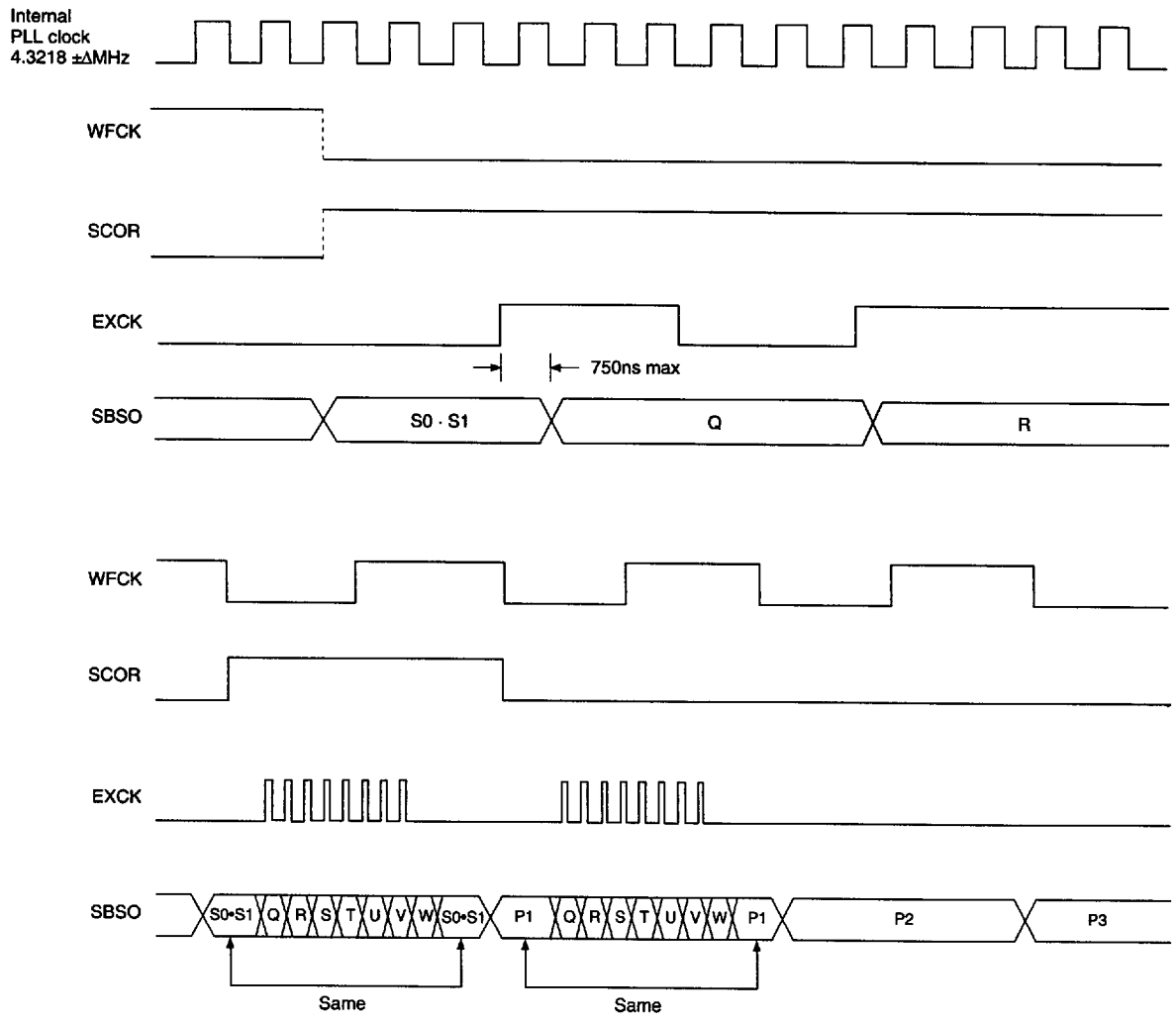


**Subcode P.Q.R.S.T.U.V.W Read Timing**



8382383 0015361 429

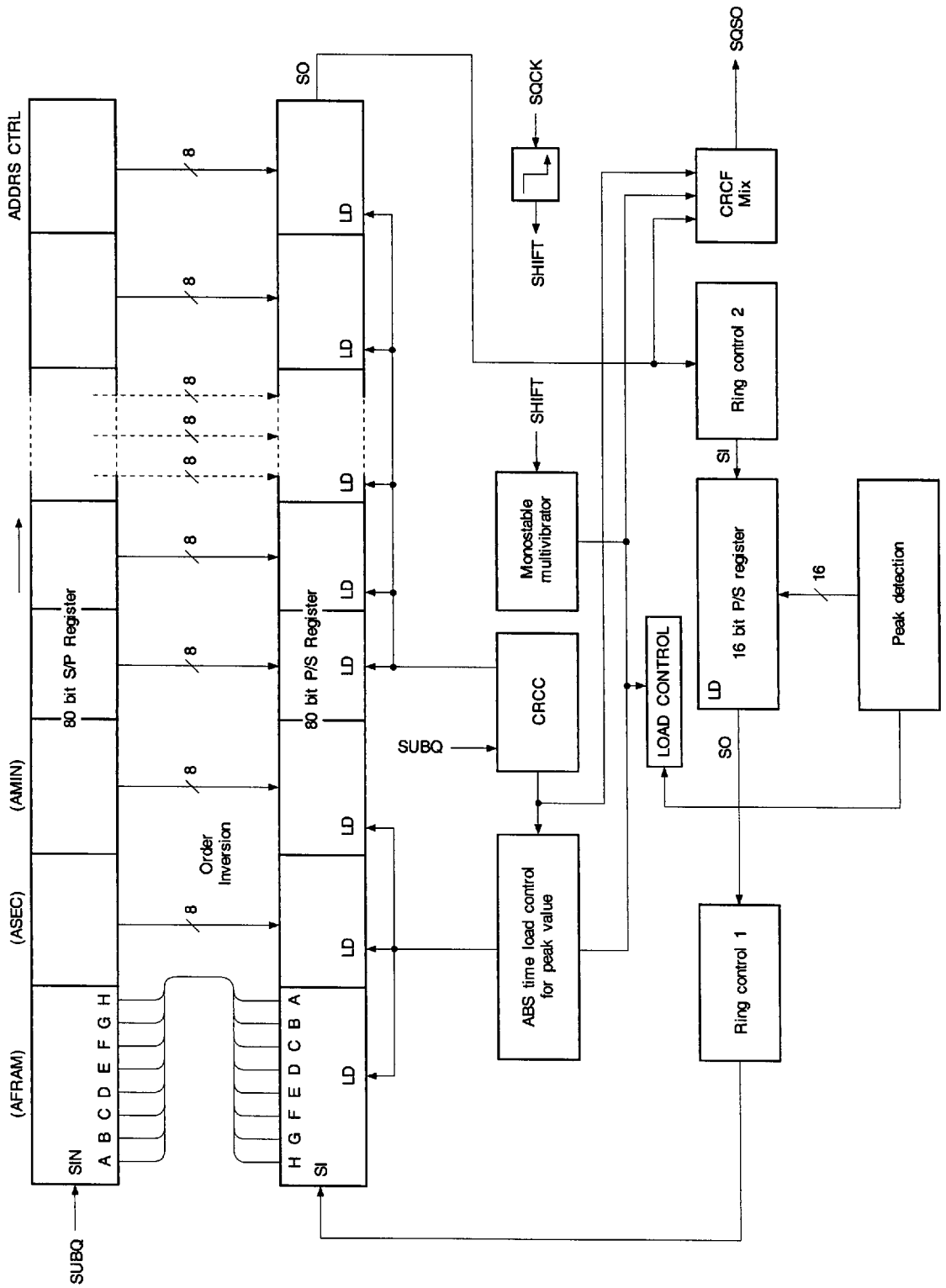


**Block Diagram 2-9**



8382383 0015362 365

**Timing Chart 2-10**

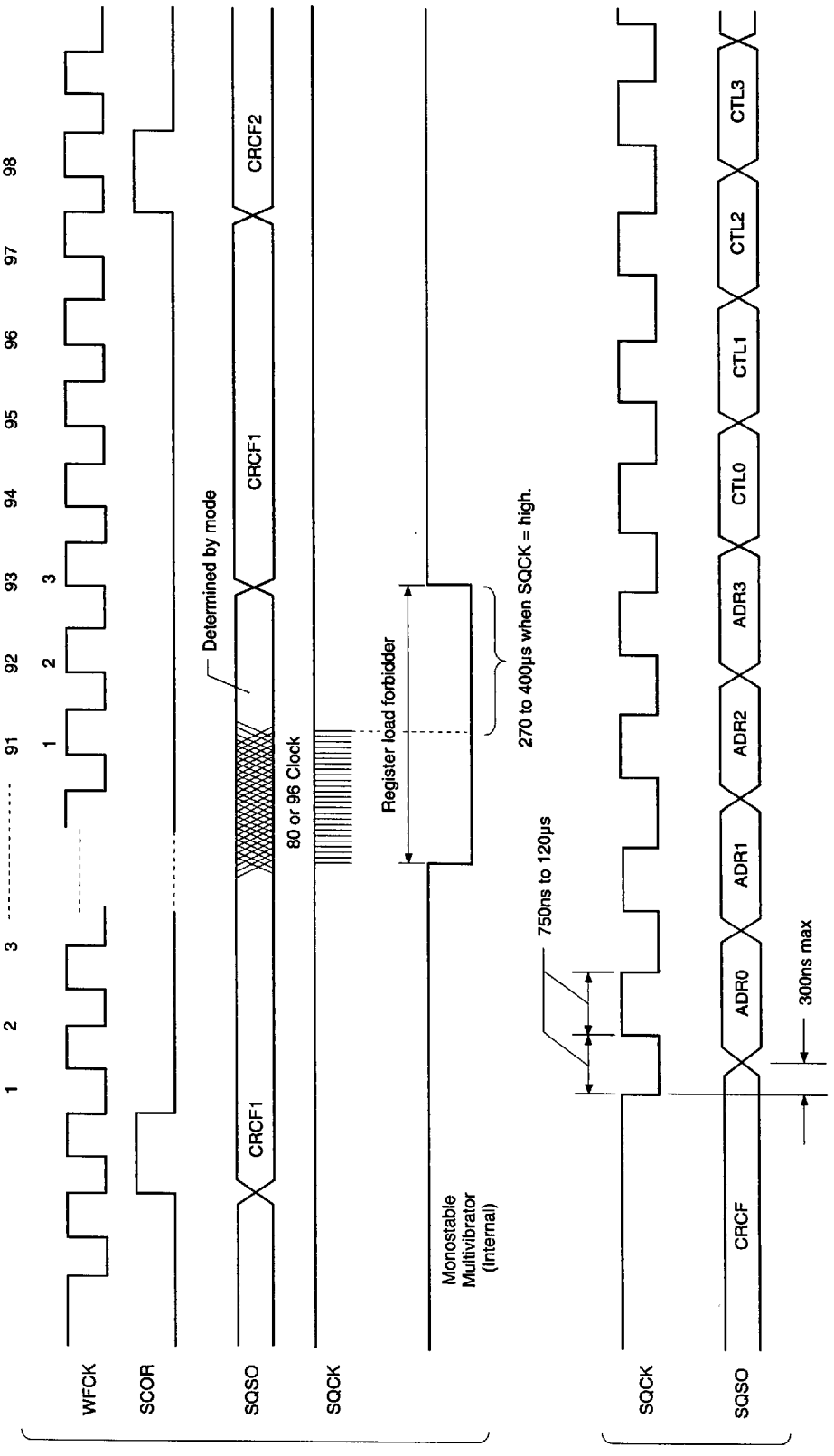




8382383 0015363 2T1

**Timing Chart 2-11**

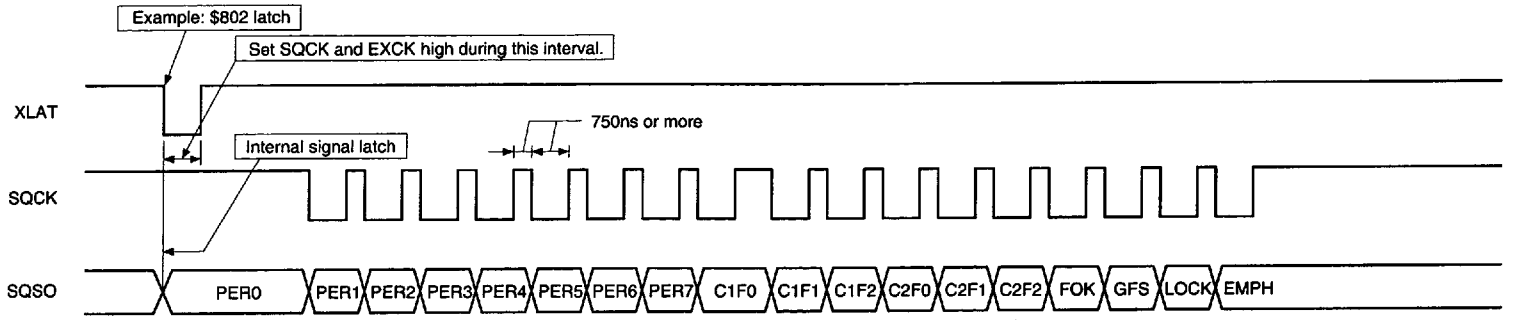


| Signal | Explanation |
|---|---|
| PER0 to PER7* | RF jitter amount (used to adjust the focus bias). 8-bit binary data in PER0 = LSB, PER7 = MSB. |
| FOK | Focus OK |
| GFS | High when the frame sync and the insertion protection timing match. |
| LOCK | GFS is sampled at 460Hz; when GFS is high, this pin outputs a high signal. If GFS is low eight consecutive samples, this pin outputs low. |
| EMPH | Outputs a high signal when the playback disc has emphasis. |

* RF jitter amount PER0 to PER7 are output in binary code. When the RF jitter amount is small, the correlation is such that the binary code number decreases.

| C1F2 | C1F1 | C1F0 | Description |
|---|---|---|---|
| 0 | 0 | 0 | No C1 errors; C1 pointer reset |
| 0 | 0 | 1 | One C1 error corrected; C1 pointer reset |
| 0 | 1 | 0 | — |
| 0 | 1 | 1 | — |
| 1 | 0 | 0 | No C1 errors; C1 pointer set |
| 1 | 0 | 1 | One C1 error corrected; C1 pointer set |
| 1 | 1 | 0 | Two C1 errors corrected; C1 pointer set |
| 1 | 1 | 1 | C1 correction impossible; C1 pointer set |

| C2F2 | C2F1 | C2F0 | Description |
|---|---|---|---|
| 0 | 0 | 0 | No C2 errors; C2 pointer reset |
| 0 | 0 | 1 | One C2 error corrected; C2 pointer reset |
| 0 | 1 | 0 | Two C2 errors corrected; C2 pointer reset |
| 0 | 1 | 1 | Three C2 errors corrected; C2 pointer reset |
| 1 | 0 | 0 | Four C2 errors corrected; C2 pointer reset |
| 1 | 0 | 1 | — |
| 1 | 1 | 0 | C2 correction impossible; C1 pointer copy |
| 1 | 1 | 1 | C2 correction impossible; C2 pointer set |



8382383 0015364 134

### §2-3. Digital PLL

- The channel clock is necessary for demodulating the EFM signal regenerated by the optical system.
  Assuming T as the channel clock cycle, the EFM signal is modulated in an integer multiple of T from 3T to 11T. In order to read the information in the EFM signal, this integer value must be read correctly. As a result, T, that is the channel clock, is necessary.
  In an actual player, PLL is necessary to regenerate the channel clock because the fluctuation in the spindle rotation alters the width of the EFM signal pulses.

The block diagram of this PLL is shown in Fig. 2-12.
The CXD2545Q has a built-in three-stage PLL.

- The first-stage PLL regenerates the variable pitch.
  LPF and VCO are necessary as external parts.
  The minimum variable amount of pitch is 0.1%. The output of this first-stage PLL is used as a reference for all clocks within the LSI. Input the XTAO output to the VCKI pin when variable pitch is not used.
- The second-stage PLL regenerates a high-frequency clock needed by the third-stage digital PLL.
- The third-stage PLL is a digital PLL that regenerates the actual channel clock, and has a ±150kHz (normal-speed playback) or more capture range.



8382383 0015365 074

**Block Diagram 2-12**

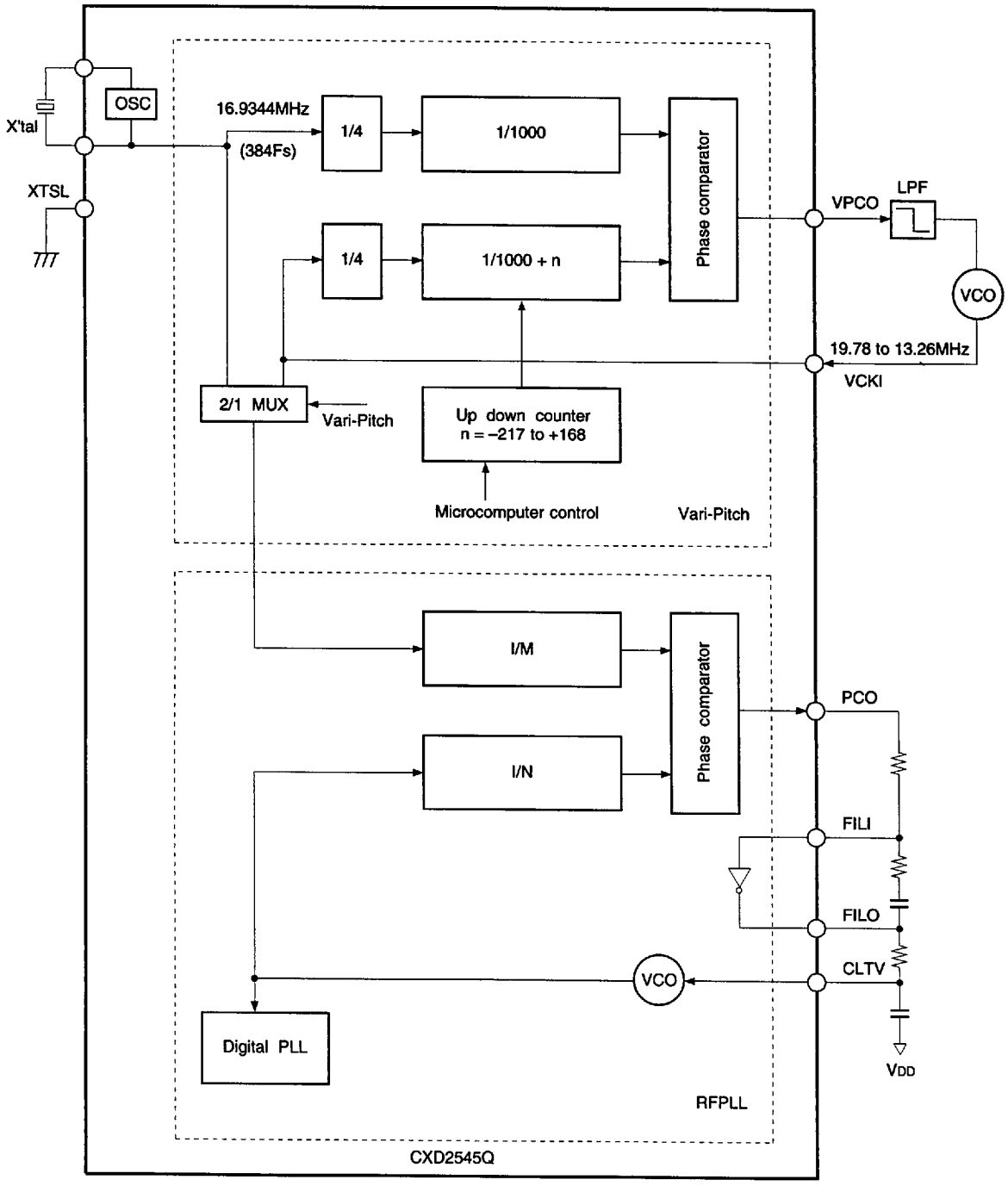




8382383 0015366 T00

### §2-4. EFM Frame Sync Protection

- In a CD player operating at normal speed, a frame sync is recorded approximately every 136µs (7.35kHz). This signal is used as a reference to know which data is the data within a frame. Conversely, if the frame sync cannot be recognized, the data is processed as error data because the data cannot be recognized. As a result, recognizing the frame sync properly is extremely important for improving playability.
- In the CXD2545Q, window protection and forward protection/backward protection have been adopted for frame sync protection. The adoption of these functions achieves very powerful frame sync protection.
  There are two window widths; one for cases where a rotational disturbance affects the player and the other for cases where there is no rotational disturbance (WSEL = 0/1). In addition, the forward protection counter is fixed to 13, and the backward protection counter to 3. In other words, when the frame sync is being regenerated normally and then cannot be detected due to scratches, a maximum of 13 frames are inserted. If the frame sync cannot be detected for 13 frames or more, the window is released and the frame sync is resynchronized.
  In addition, immediately after the window is released and the resynchronization is executed, if a proper frame sync cannot be detected within 3 frames, the window is released immediately.

### §2-5. Error Correction

- In the CD format, one 8-bit data contains two error correction codes, C1 and C2. For C1 correction, the code is created with 28-byte information and 4-byte C1 parity.
  For C2 correction, the code is created with 24-byte information and 4-byte C2 parity.
  Both C1 and C2 are Reed Solomon codes with a minimum distance of 5.
- The CXD2545Q uses refined super strategy to achieve double correction for C1 and quadruple correction for C2.
- In addition, to prevent C2 miscorrection, a C1 pointer is attached to data after C1 correction according to the C1 error status, the generation status of the EFM signal, and the operating status of the player.
- The correction status can be monitored outside the LSI. See the Table 2-13.
- When the C2 pointer is high, the data in question was uncorrectable.
  Either the pre-value was held or an average value interpolation was made for the data.

| MNT3 | MNT2 | MNT1 | MNT0 | Description | |
|---|---|---|---|---|---|
| 0 | 0 | 0 | 0 | No C1 errors; | C1 pointer reset |
| 0 | 0 | 0 | 1 | One C1 error corrected; | C1 pointer reset |
| 0 | 0 | 1 | 0 | — | |
| 0 | 0 | 1 | 1 | — | |
| 0 | 1 | 0 | 0 | No C1 errors; | C1 pointer set |
| 0 | 1 | 0 | 1 | One C1 error corrected; | C1 pointer set |
| 0 | 1 | 1 | 0 | Two C1 errors corrected; | C1 pointer set |
| 0 | 1 | 1 | 1 | C1 correction impossible; | C1 pointer set |
| 1 | 0 | 0 | 0 | No C2 errors; | C2 pointer reset |
| 1 | 0 | 0 | 1 | One C2 error corrected; | C2 pointer reset |
| 1 | 0 | 1 | 0 | Two C2 errors corrected; | C2 pointer reset |
| 1 | 0 | 1 | 1 | Three C2 errors corrected; | C2 pointer reset |
| 1 | 1 | 0 | 0 | Four C2 errors corrected; | C2 pointer reset |
| 1 | 1 | 0 | 1 | — | |
| 1 | 1 | 1 | 0 | C2 correction impossible; | C1 pointer copy |
| 1 | 1 | 1 | 1 | C2 correction impossible; | C2 pointer set |

**Table 2-13.**



8382383 0015367 947

**Timing Chart 2-14**

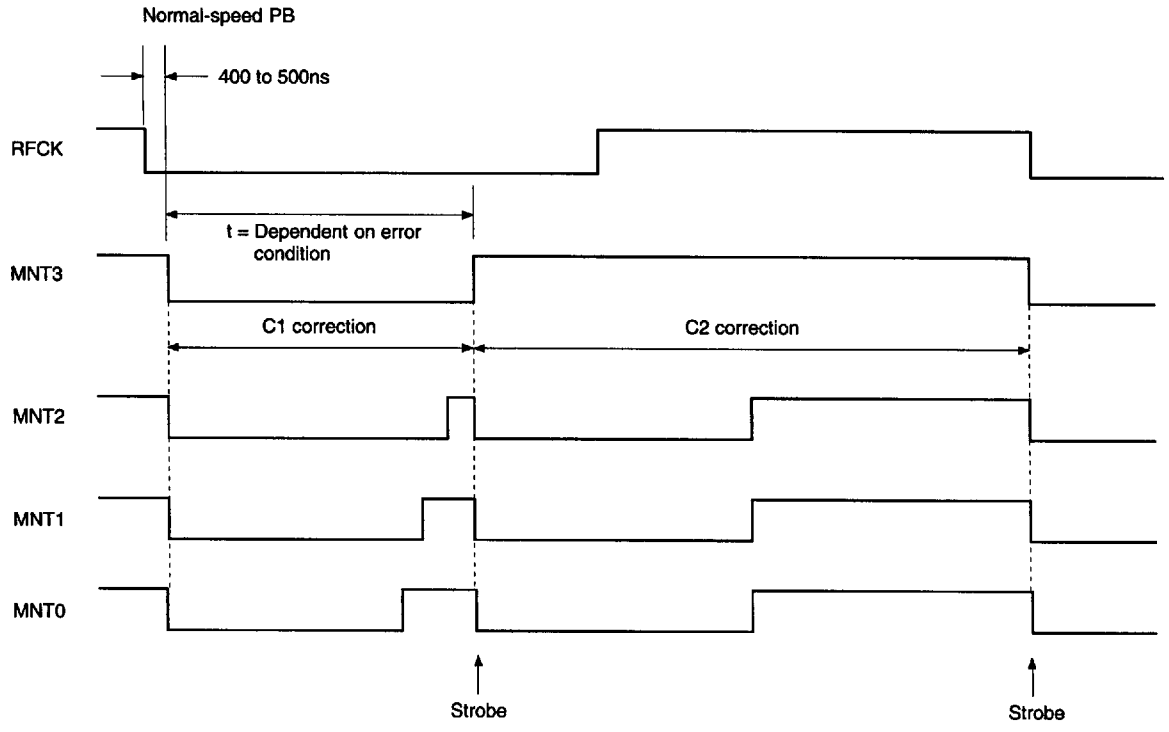


## §2-6. DA Interface

- The CXD2545Q has two modes as DA interfaces.
  a) 48-bit slot interface
     This interface includes 48 cycles of the bit clock within one LRCK cycle, and is MSB first.
     When LRCK is high, the data is for the left channel.
  b) 64-bit slot interface
     This interface includes 64 cycles of the bit clock within one LRCK cycle, and is LSB first.
     When LRCK is low, the data is for the left channel.



8382383 0015368 883

**Timing Chart 2-15**

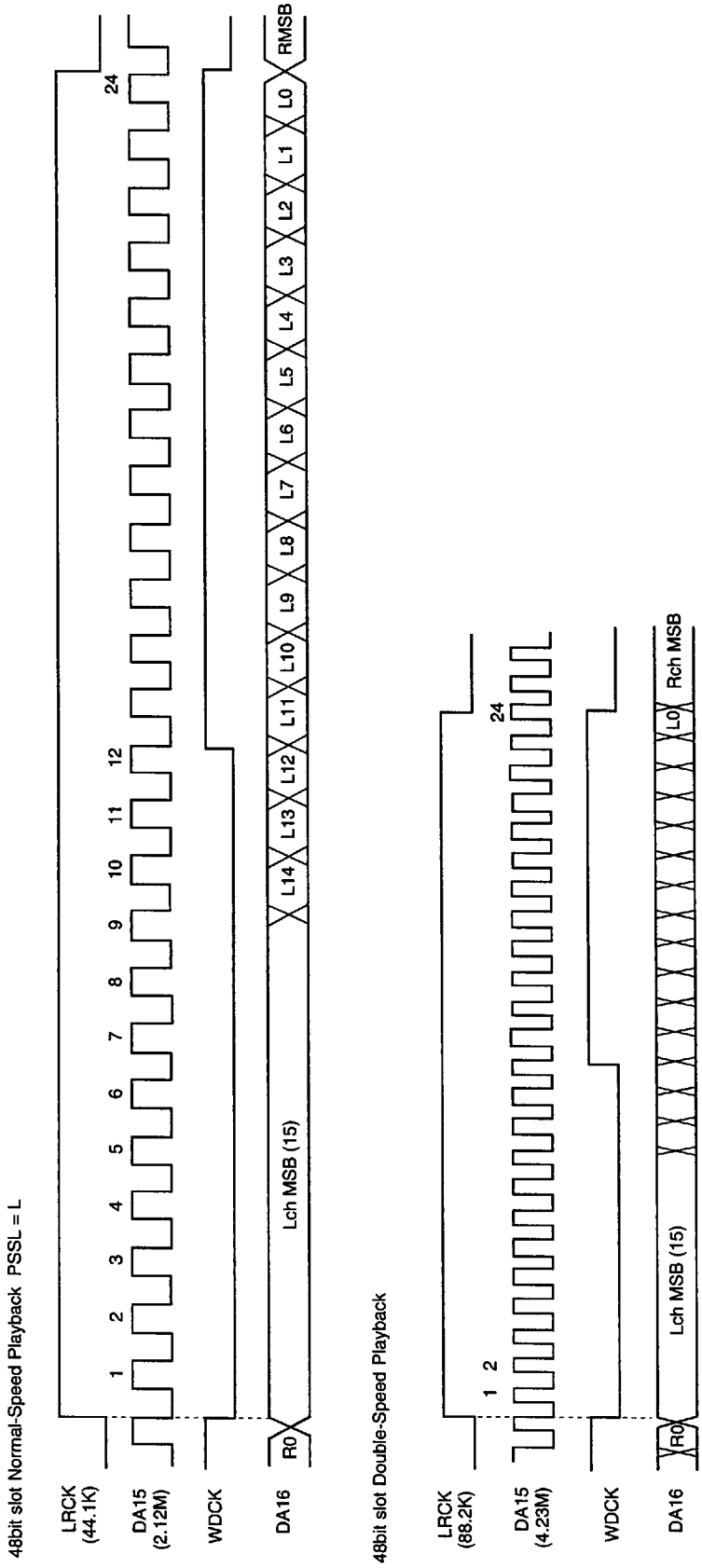




8382383 0015369 71T

## Timing Chart 2-16

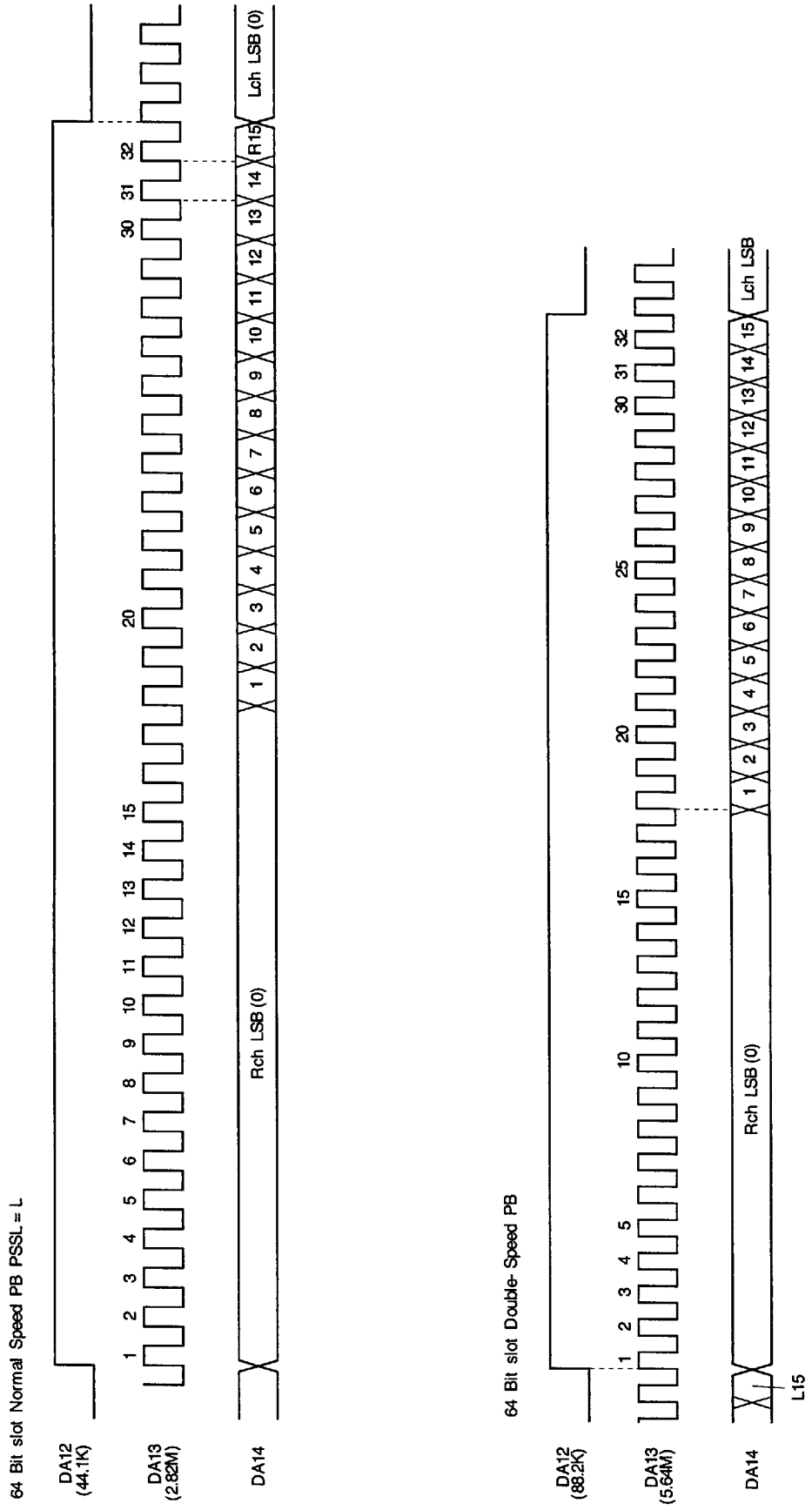




8382383 0015370 431

### §2-7. Digital Out

There are three digital output formats; the type 1 format for broadcasting stations, the type 2 form 1 format for home use, and the type 2 form 2 format for the manufacture of software.
The CXD2545Q supports Type 2 form 1.
Regarding the clock accuracy of the channel status, level III is set automatically when the crystal clock is used and level II is variable pitch. In addition, Sub Q data which are matched twice in succession after a CRC check are input to the first four bits (bits 0 to 3).
DOUT is output when the crystal is 34 MHz, the variable pitch is reset, and DSPB = 1. Therefore, set MD2 to 0 and turn DOUT off.

Digital Out C bit

| | 0 | 1 | 2 | 3 | 4 | 5 | 6 | 7 | 8 | 9 | 10 | 11 | 12 | 13 | 14 | 15 |
|---|---|---|---|---|---|---|---|---|---|---|---|---|---|---|---|---|
| 0 | From sub-Q | | | | 0 | 0 | 0 | 0 | 1 | 0 | 0 | 0 | 0 | 0 | 0 | 0 |
| | ID0 | ID1 | COPY | Emph | | | | | | | | | | | | |
| 16 | 0 | 0 | 0 | 0 | 0 | 0 | 0 | 0 | 0 | 0 | 0 | 0 | 0 | 0/1 | 0 | 0 |
| 32 | | | | | | | | | | | | | | | | |
| 48 | | | | | | | | | | | | | | | | |
| | | | | | | | | 0 | | | | | | | | |
| 176 | | | | | | | | | | | | | | | | |

bit0 to 3 .....Sub Q control bits that matched twice with CRCOK
bit29 .....Varipitch: 1 X'tal: 0

**Table 2-17.**

### §2-8. Servo Auto Sequence

This function performs a series of controls, including auto focus and track jumps. When the auto sequence command is received from the CPU, auto focus, 1 track jump, 2N track jumps, fine search, and M track move are executed automatically.
The servo block is used in an exclusive manner during the auto sequence execution (when XBUSY = low), so that commands from the CPU are not transferred to the servo block, but can be sent to the signal processor block.
In addition, when using the auto sequencer, turn the A.SEQ of register 9 on.
When the clock goes from low to high while XBUSY is low, XBUSY does not become high for a maximum of 100µs after that point. This is designed to prevent the transfer of erroneous data to the servo block when XBUSY changes from low to high by the monostable multivibrator, which is reset by CLOK being low (When XBUSY is low).



8382383 0015371 378

In addition, a MAX timer is built-in as a countermeasure against abnormal operation due to external disturbances, etc. When the auto sequence command is sent from the CPU, this command assumes a $4XY format, in which X specifies the command and Y sets the MAX timer value and timer range. If the executed auto sequence command does not terminate within the set timer value, the auto sequence is interrupted (like $40). See 2-1, $4X commands concerning the timer value and range. Also, the MAX timer is invalidated by inputting $4X0.
Although this command is explained in the format of $4X in the following command descriptions, the timer value and timer range should be actually sent together from the CPU.

(a) Auto focus ($47)

Focus search-up is performed, FOK and FZC are checked, and the focus servo is turned on.
If $47 is received from the CPU, the focus servo is turned on according to Fig. 2-18. The auto focus is executed after focus search-up, and the pickup should be lowered beforehand (focus search-down). In addition, blind E of register 5 is used to eliminate FZC chattering. In other words, the focus servo is turned on at the falling edge of FZC after FZC has been continuously high for a longer time than E.



8382383 0015372 204

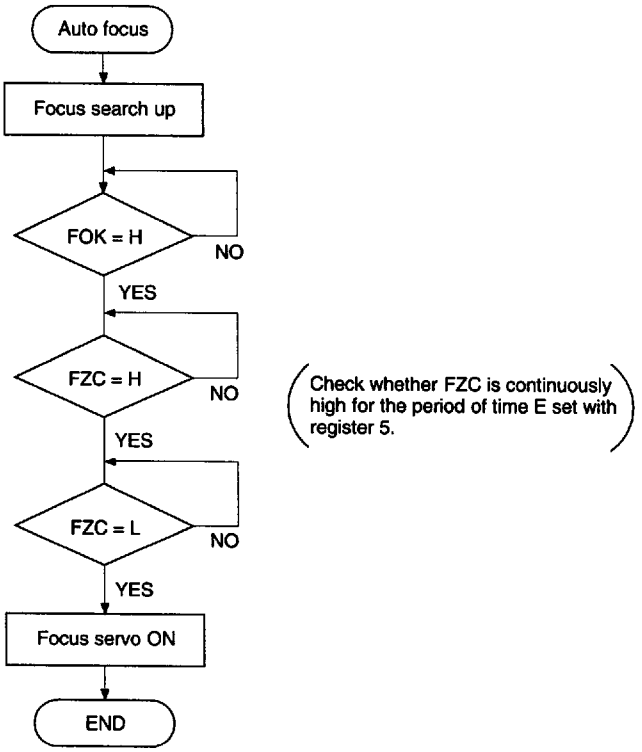


**Fig. 2-18 (a). Auto Focus Flow Chart**

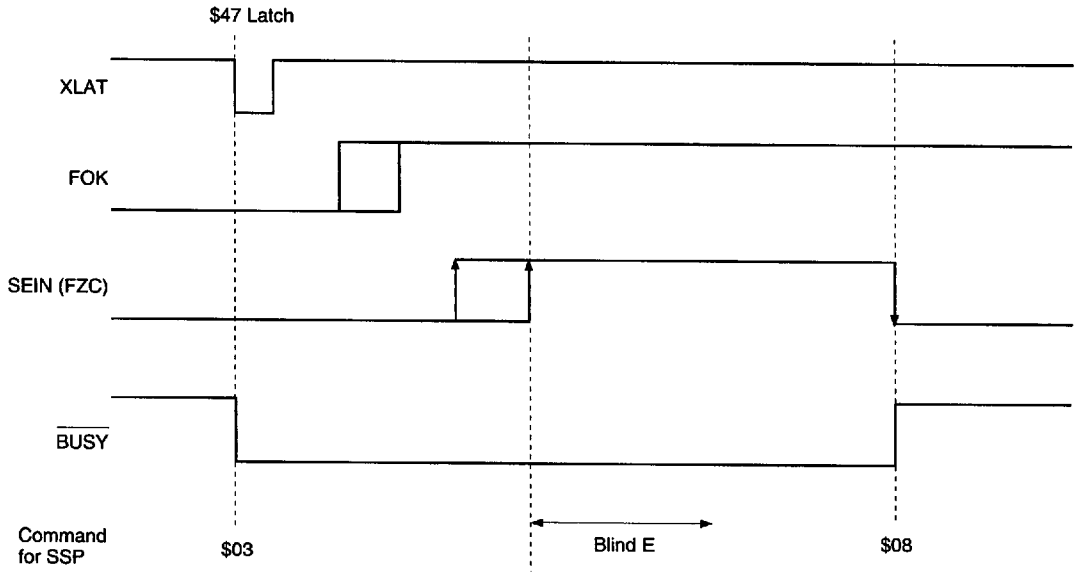


**Fig. 2-18 (b). Auto Focus Timing Chart**



8382383 0015373 140

(b) Track jump

1, 10 and 2N-track jumps are performed respectively. Always use them when focus, tracking, and sled servo are on. Note that tracking gain-up and braking-on ($17) should be sent beforehand because they are not performed.

- 1-track jump

When $48 ($49 for REV) is received from the CPU, a FWD (REV) 1-track jump is performed in accordance with Fig. 2-19. Set blind A and brake B with register 5.

- 10-track jump

When $4A ($4B for REV) is received from the CPU, a FWD (REV) 10-track jump is performed in accordance with Fig. 2-20. The principal difference between the 10-track jump and the 1-track jump is whether to kick the sled or not. In addition, after kicking the actuator, when 5 tracks have been counted through COUT, the brake is applied to the actuator. Then, when the actuator speed is found to have slowed up enough (determined by the COUT cycle becoming longer than the overflow C set in register 5), the tracking and sled servos are turned on.

- 2N-track jump

When $4C ($4D for REV) is received from the CPU, a FWD (REV) 2N-track jump is performed in accordance with Fig. 2-21. The track jump count "N" is set in register 7. Although N can be set to $2^{16}$ tracks, note that the setting is actually limited by the actuator. COUT is used for counting the number of jumps when N is less than 16, and MIRR is used with N is 16 or higher.

Although the 2N-track jump basically follows the same sequence as the 10-track jump, the one difference is that after the tracking servo is turned on, the sled continues to move only for "D", set in register 6.

- Fine search

When $44 ($45 for REV) is received from the CPU, a FWD (REV) fine search (N-track jump) is performed in accordance with Fig. 2-22. The differences from a 2N-track jump are that a higher precision is achieved by controlling the traverse speed, and long jumps are possible by controlling the sled. The track jump count is set in register 7. N can be set to $2^{16}$ tracks. After kicking the actuator and sled, the traverse speed is controlled based on the overflow G. Set kick D and F in register 5. In addition, sled speed control during traverse can be turned off by causing COMP to fall. Set the number of tracks during which COMP falls in register B. After N tracks have been counted through COUT, the brake is applied to the actuator and sled. (This is performed by turning on the tracking servo for the actuator, and by kicking the sled in the opposite direction during the time for kick D set in register 6.) Then, the tracking and sled servos are turned on.

Set overflow G to the speed required to slow up just before the track jump terminates. (The speed should be such that it will come on-track when the tracking servo turns on at the termination of the track jump.) For example, set the target track count N – $\alpha$ for the traverse monitor counter which is set in register B, and COMP will be monitored. When the falling edge of this COMP is detected, overflow G can be reset.

- M track move

When $4E ($4F for REV) is received from the CPU, a FWD (REV) M track move is performed in accordance with Fig. 2-23. M can be set to 216 tracks. COUT is used for counting the number of moves when M is less than 16, and MIRR is used when M is 16 or higher. The M track move is executed only by moving the sled, and is therefore suited for moving across several thousand to several ten-thousand tracks. In addition, the track and sled servo are turned off after M tracks have been counted through COUT or MIRR unlike for the other jumps. Transfer $25 after the actuator is stabled.



8382383 0015374 087

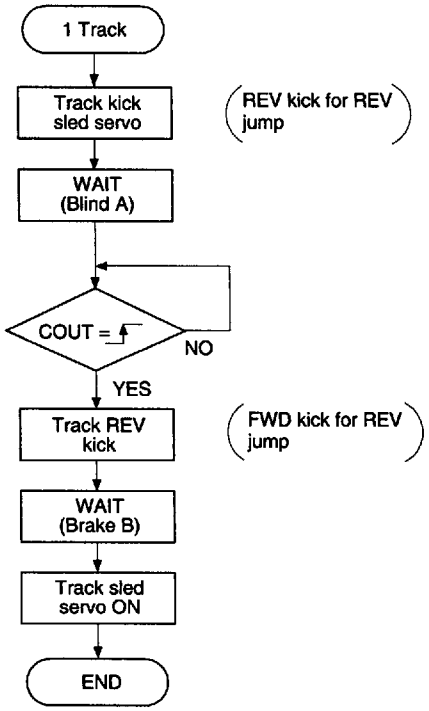


**Fig. 2-19 (a). 1-Track Jump Flow Chart**

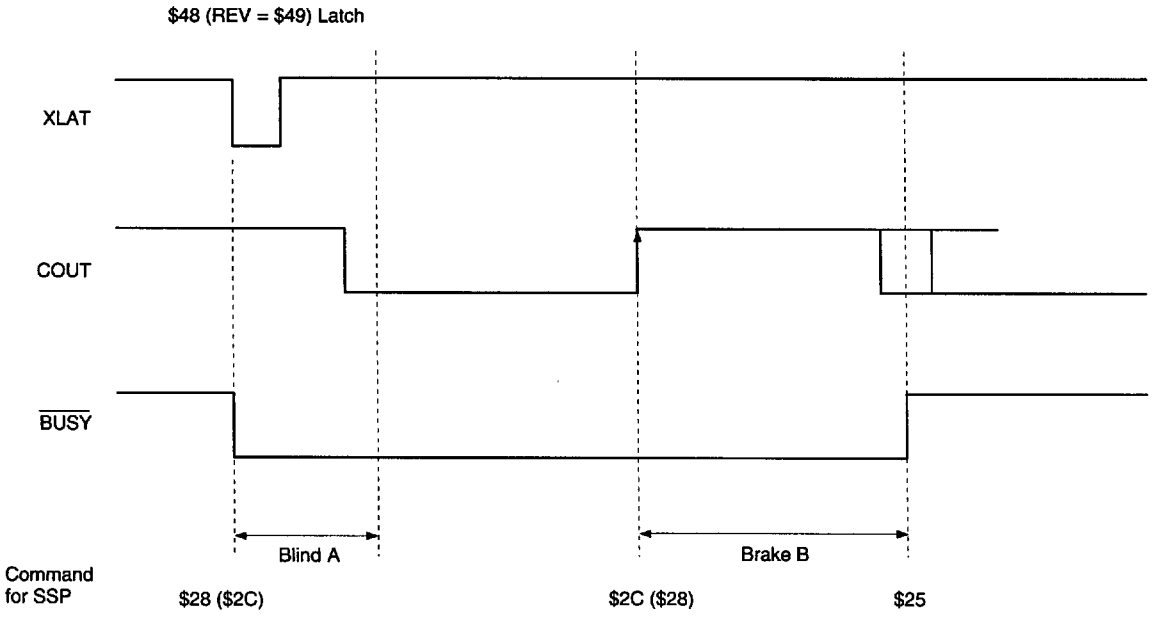


**Fig. 2-19 (b). 1-Track Jump Timing Chart**



8382383 0015375 T13

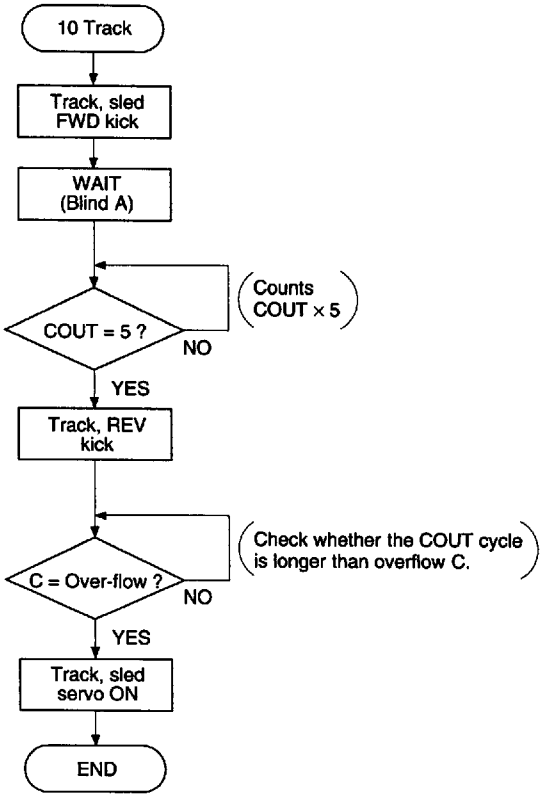


**Fig. 2-20 (a). 10-Track Jump Flow Chart**

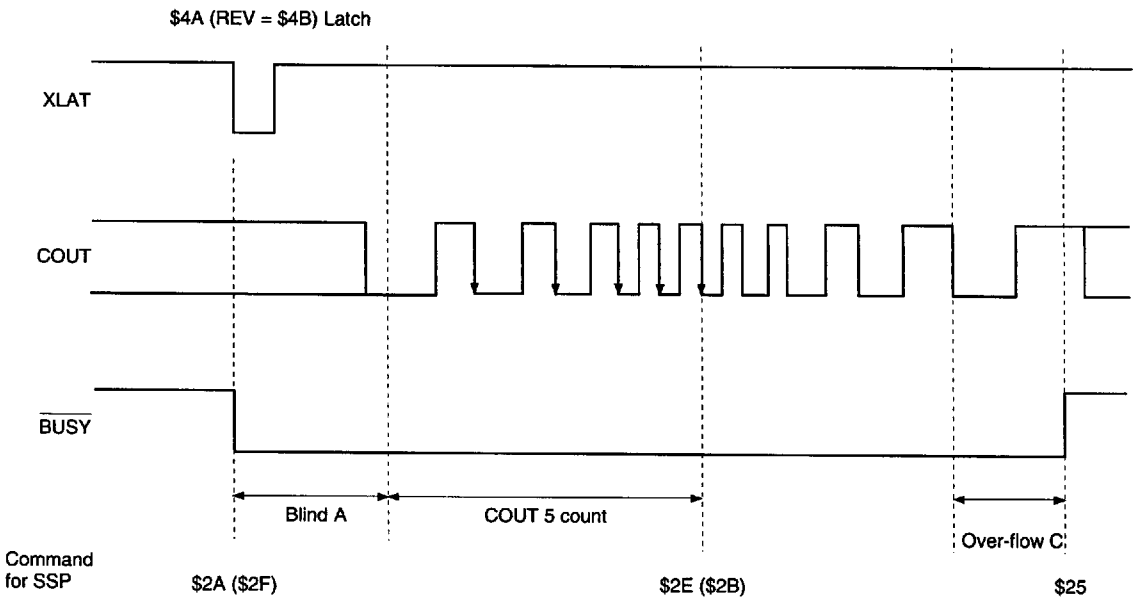


**Fig. 2-20 (b). 10-Track Jump Timing Chart**



8382383 0015376 95T

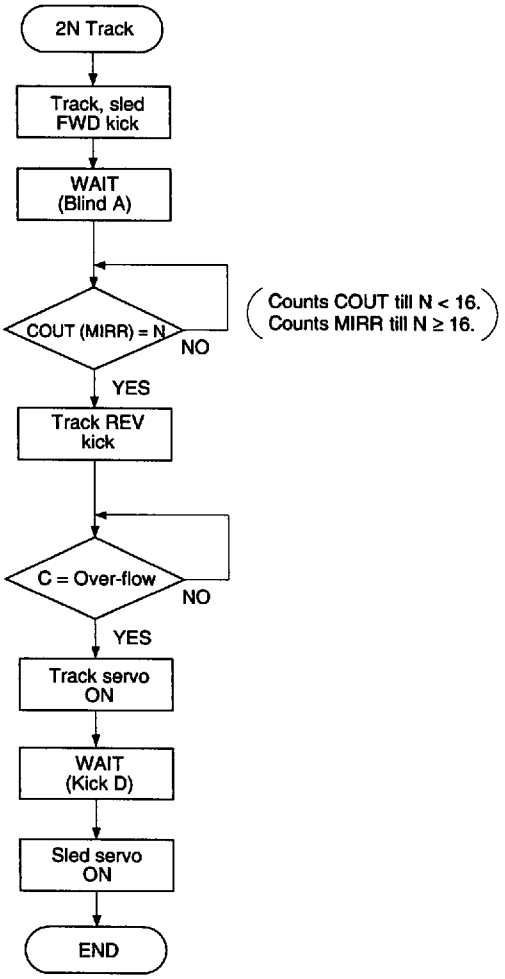


**Fig. 2-21 (a). 2N-Track Jump Flow Chart**

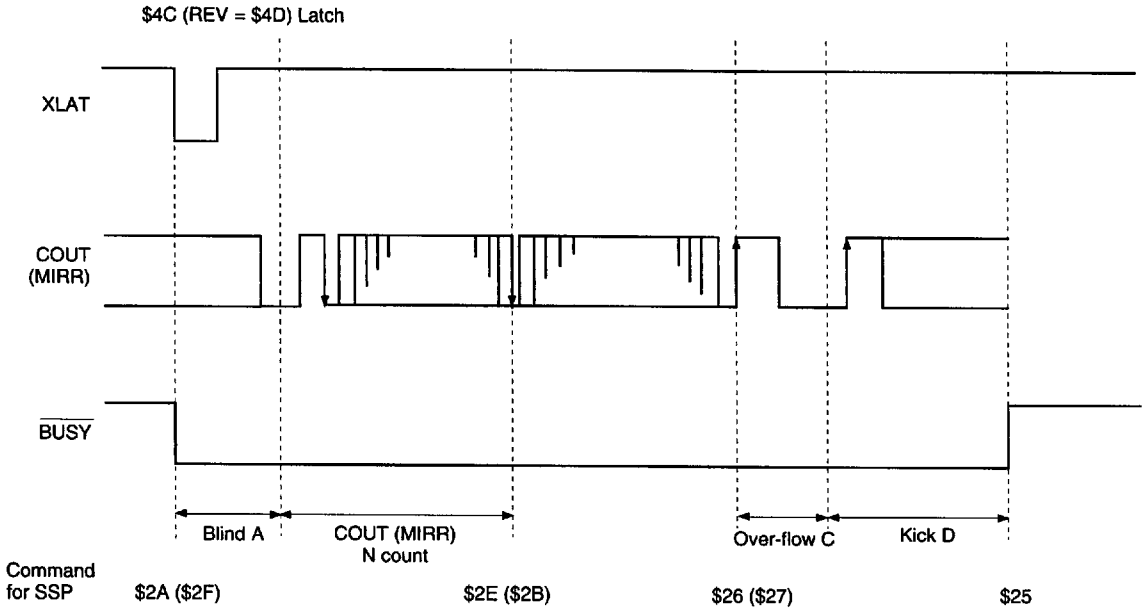


**Fig. 2-21 (b). 2N-Track Jump Timing Chart**



8382383 0015377 896

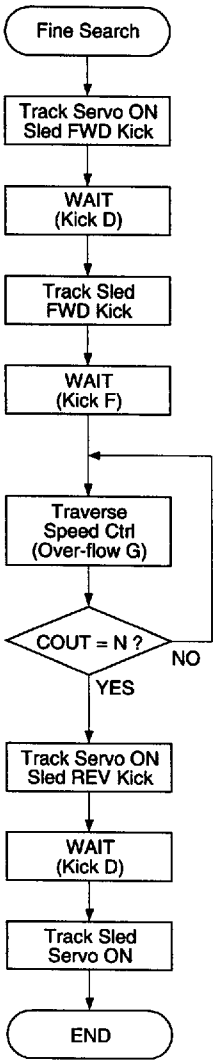


**Fig. 2-22 (a). Fine Search Flow Chart**

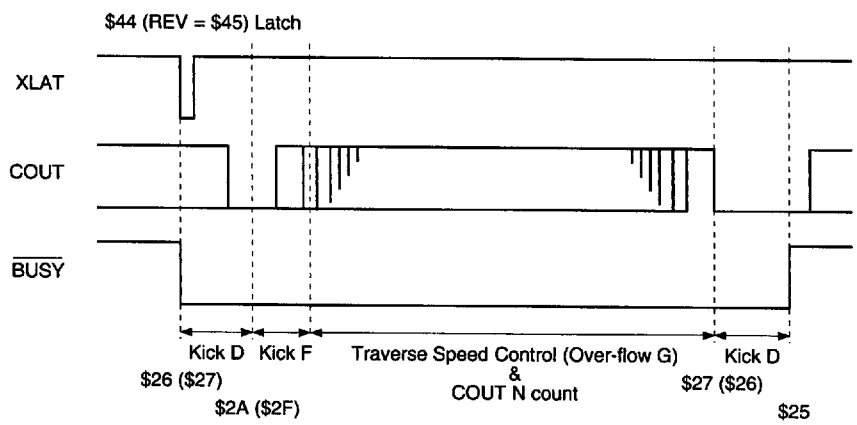


**Fig. 2-22 (b). Fine Search Timing Chart**



8382383 0015378 722

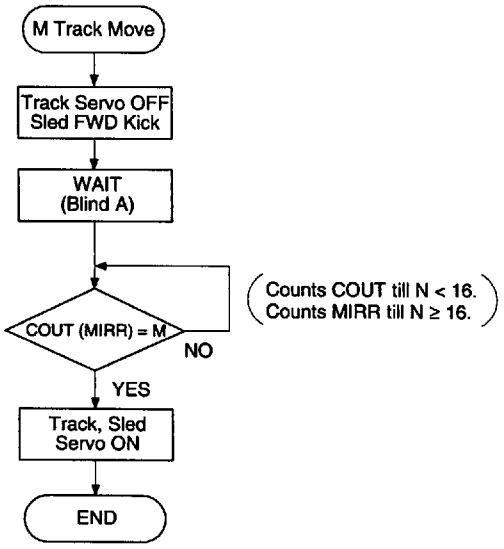


**Fig. 2-23 (a). M-Track Move Flow Chart**

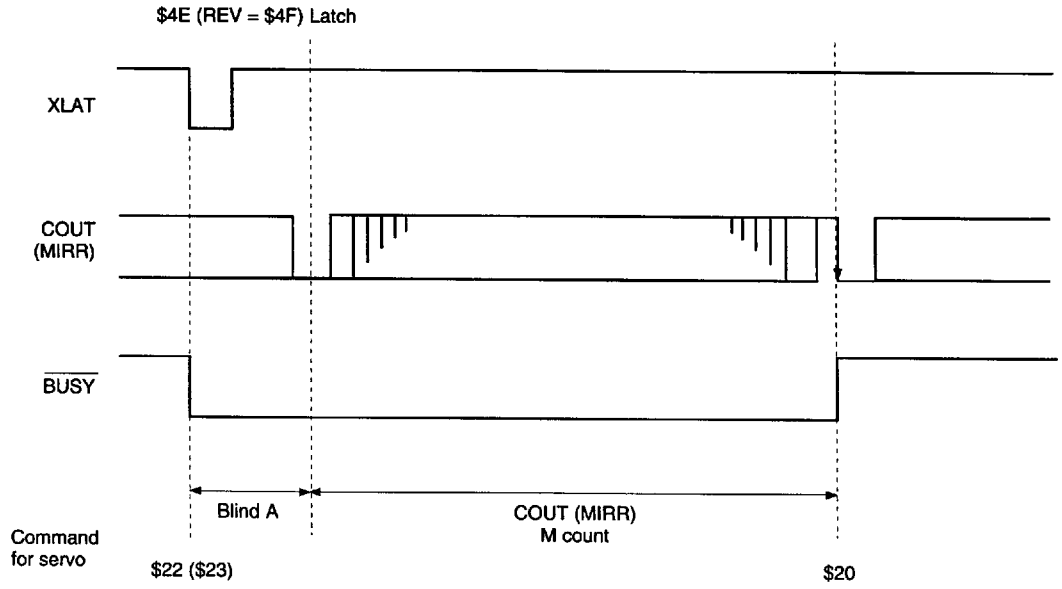


**Fig. 2-23 (b). M-Track Move Timing Chart**



8382383 0015379 669

## §2-9. Digital CLV

Fig. 2-24 shows the block diagram. Digital CLV makes PWM output in CLVS, CLVP and other modes with the MDS error or MDP error signal sampling frequency increased to 130kHz during normal-speed operation. In addition, the digital spindle servo can set the gain.

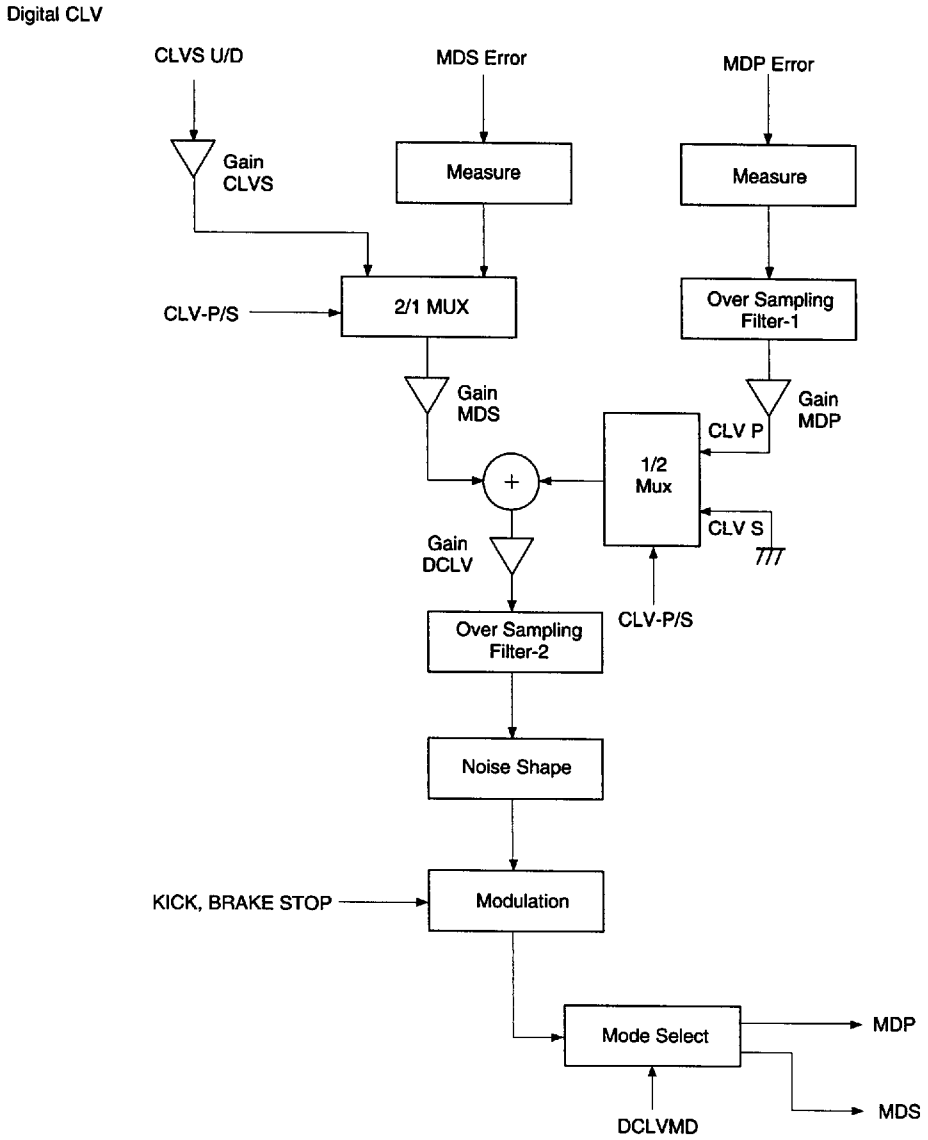


CLVS U/D: Up/down signal from the CLV-S servo
MDS error: Frequency error for the CLV-P servo
MDP error: Phase error for the CLV-P servo

**Fig. 2-24. Block Diagram**



8382383 0015380 380

## §2-10. Asymmetry Compensation

Fig. 2-25 shows the block diagram and circuit example.

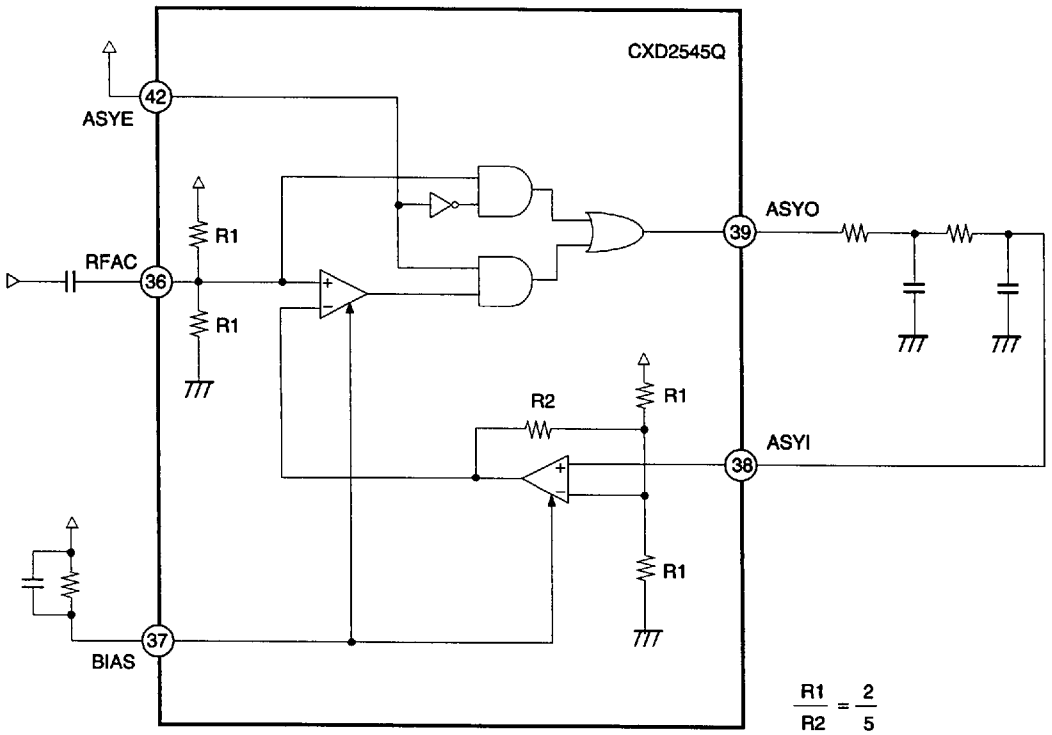


**Fig. 2-25. Example of an Asymmetry Compensation Application Circuit**

## §2-11. Playback Speed

In the CXD2545Q, the following playback modes can be selected through different combinations of the crystal, XTSL pin, double-speed playback command (DSPB), VCO selection command (VCOSEL) and command transfer rate selector (ASHS). Also, the minimum operating voltage changes according to the playback mode. (See the Recommended Operating Conditions.)

**Playback modes**

| Mode | X'tal | XTSL | DSPB | VCOSEL | ASHS | Playback speed | Error correction |
|---|---|---|---|---|---|---|---|
| 1 | 768Fs | 1 | 0 | 0/1 | 0 | × 1 | C1: double; C2: quadruple |
| 2 | 768Fs | 1 | 1 | 0/1 | 0 | × 2 | C1: double; C2: double |
| 3 | 768Fs | 0 | 0 | 1 | 1 | × 2 | C1: double; C2: quadruple |
| 4 | 768Fs | 0 | 1 | 1 | 1 | × 4 | C1: double; C2: double |
| 5 | 384Fs | 0 | 0 | 0/1 | 0 | × 1 | C1: double; C2: quadruple |
| 6 | 384Fs | 0 | 1 | 0/1 | 0 | × 2 | C1: double; C2: double |
| 7 | 384Fs | 1 | 1 | 0/1 | 0 | × 1 | C1: double; C2: double |

However, Fs = 44.1kHz.



8382383 0015381 217

## [3] Description of Servo Signal Processing-System Functions and Commands

### §3-0. General Description of the Servo Signal Processing System (Voltages are the values for a 5V power supply.)

Focus servo

| | |
|---|---|
| Sampling rate: | 88.2kHz |
| Input range: | 2.5V center ±1.0V |
| Output format: | 7-bit PWM |
| Others: | Offset cancel |
| | Focus bias adjustment |
| | Focus search |
| | Gain-down function |
| | Defect countermeasure |
| | Automatic gain control |

Tracking servo

| | |
|---|---|
| Sampling rate: | 88.2kHz |
| Input range: | 2.5V center ±1.0V |
| Output format: | 7-bit PWM |
| Others: | Offset cancel |
| | E:F balance adjustment |
| | Track jump |
| | Gain-up function |
| | Defect countermeasure |
| | Drive cancel |
| | Automatic gain control |
| | Vibration countermeasure |

Sled servo

| | |
|---|---|
| Sampling rate: | 345Hz |
| Input range: | 2.5V center ±1.0V |
| Output format: | 7-bit PWM |
| Other: | Sled move |

FOK, MIRR, DFCT signals generation

| | |
|---|---|
| RF signal sampling rate: | 1.4MHz |
| Input range: | 2.15V to 5.0V |
| Others: | RF zero level automatic measurement |
| | The signal input from the RFDC pin is multiplied by a factor of 0.7 and loaded into the A/D converter. |



8382383 0015382 153

### §3-1. Digital Servo Block Master Clock (MCK)

The FSTI pin (Pin 66) is the reference clock input pin. The internal master clock (MCK) is generated by dividing the frequency of the signal input to FSTI. the frequency division ratio is 1/2 or 1/4.
Table 3-1 below shows the hypothetical case where the crystal clock generated from the digital signal processor block is 2/3 frequency divided and input to the FSTI pin (Pin 66) by externally connecting the FSTI pin (Pin 66) and the FSTO pin (Pin 67).
The XT4D and XT2D command settings can be made with D13 and D12 of $3F. (Default = 0)
The digital servo block is designed with an MCK frequency of 5.6448MHz.

| Mode | X'tal | FSTO | FSTI | XTSL | XT4D | XT2D | Frequency division ratio | MCK frequency |
|---|---|---|---|---|---|---|---|---|
| 1 | 384Fs | 256Fs | 256Fs | * | 0 | 1 | 1/2 | 128Fs |
| 2 | 384Fs | 256Fs | 256Fs | 0 | 0 | 0 | 1/2 | 128Fs |
| 3 | 768Fs | 512Fs | 512Fs | * | 1 | 0 | 1/4 | 128Fs |
| 4 | 768Fs | 512Fs | 512Fs | 1 | 0 | 0 | 1/4 | 128Fs |

Fs = 44.1kHz, *: Don't care

**Table 3-1.**

### §3-2. AVRG (Average) Measurement and Compensation

The CXD2545Q has a compensation circuit which performs compensation using the RFDC, VC, FE and TE AVRG measurement circuits and their measurement results in order to perform reliable servo control.
AVRG measurement and compensation is necessary to initialize the CXD2545Q, and can cancel the offset by performing each AVRG measurement before playback operation and using these results for compensation.
The level applied to the VC, FE, RFDC and TE pins can be measured by setting D15 (VLCM), D13 (FLM), D11 (RFLM) and D4 (TCLM) of $38 respectively to 1.
AVRG measurement consists of digitally measuring the level applied to each analog input pin by taking the average of 256 samples, and then loading these values into the AVRG register.
AVRG measurement requires approximately 2.9ms to 5.8ms after the command is received.
During AVRG measurement, if the upper 8 bits of the serial data are 38 (Hex), the termination of AVRG measurement operation can be confirmed by monitoring the SENS pin (Pin 80). (See the Timing Chart 3-2.)

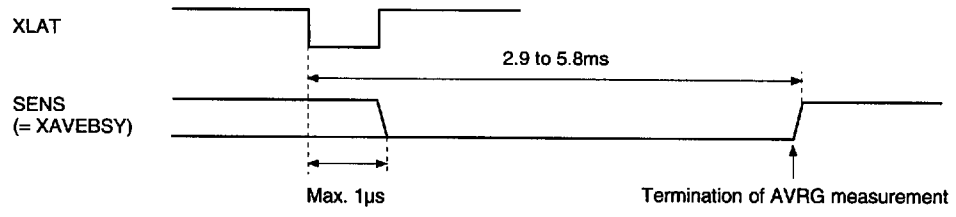


**Timing Chart 3-2.**



8382383 0015383 09T

**<Measurement>**

• VC AVRG

The offset can be canceled by measuring the VC level which is the center potential for the system and using that value to apply compensation to each input error signal.

• FE AVRG

This measures the FE signal DC level. In addition, compensation is applied to the FZC comparator level output from the SENS pin during FCS SEARCH (focus search) using these measurement results.

• TE AVRG

This measures the TE signal DC level.

• RF AVRG

The CXD2545Q generates the MIRR, DFCT and FOK signals from the RF signal. However, the FOK signal is generated by comparing the RF signal at a certain level, so that it is necessary to establish a zero level which becomes the comparator level reference. Therefore, the RF signal is measured before playback operation, and compensation applied to bring this level to the zero level.

An example of sending AVRG measurement and compensation commands is shown below.

(Example) $380800 (RF Avrg. measurement on)
$382000 (FE Avrg. measurement on)
$380010 (TE Avrg. measurement on)
$388000 (VC Avrg. measurement on)
(Finish each AVRG measurement before starting the next.)
$38140A (RFLC, FLC0, FLC1 and TLC1 commands on)
(The required compensation turn on together; see Fig. 3-3.)

An interval of 5.8ms or more must be maintained between each command, or the SENS pin must be monitored and the next AVRG command sent after confirming that the previous command has been finished.

**<Compensation>**

See Fig. 3-3 for the contents of each compensation below.

• RFLC

The difference by which the RF signal exceeds the RF AVRG value is input to the RF In register.
(00 is input when the RF signal is lower than the RF AVRG value.)

• TCL0

The value obtained by subtracting the VC AVRG value from the TE signal is input to the TRK In register.

• TCL1

The value obtained by subtracting the TE AVRG value from the TE signal is input to the TRK In register.

• VCLC

The value obtained by subtracting the VC AVRG value from the FE signal is input to the FCS In register.

• FLC1

The value obtained by subtracting the FE AVRG value from the FE signal is input to the FCS In register.

• FLC0

The value obtained by subtracting the FE AVRG value from the FE signal is input to the FZC register.



8382383 0015384 T26

### §3-3. E:F Balance Adjustment Function

When the disc is rotated with the laser on, and with the FCS (focus) servo on via FCS Search (focus search), the traverse waveform appears in the TE signal due to disc eccentricity.
In this condition, the low-band component can be extracted from the TE signal using the built-in TRK hold filter by setting D5 (TBLM) of $38 to 1.
The extracted low-band component is loaded into the TRVSC register as a digital value, and the TRVSC register value is established when TBLM returns to 0.
Next, setting D2 (TLC2) of $38 to 1 applies only the amount of compensation (subtraction) equal to the TRVSC register value to the values obtained from the TE and SE input pins, enabling the E:F balance offset to be adjusted. (See Fig. 3-3.)

### §3-4. FCS Bias (Focus Bias) Adjustment Function

The FBIAS register value can be added to the FCS servo filter input by setting D14 (FBON) of $3A to 1. (See Fig. 3-3.)
When the FBIAS register value is set to D11 = 0 and D10 = 1 by $34F, data can be written using the 9-bit value of D9 to D1 (D9: MSB).
In addition, the RF jitter can be monitored by setting the SOCT command of $8 to 1. (See the CD Signal Processing-System Block Timing Chart 2-4.)



8382383 0015385 962

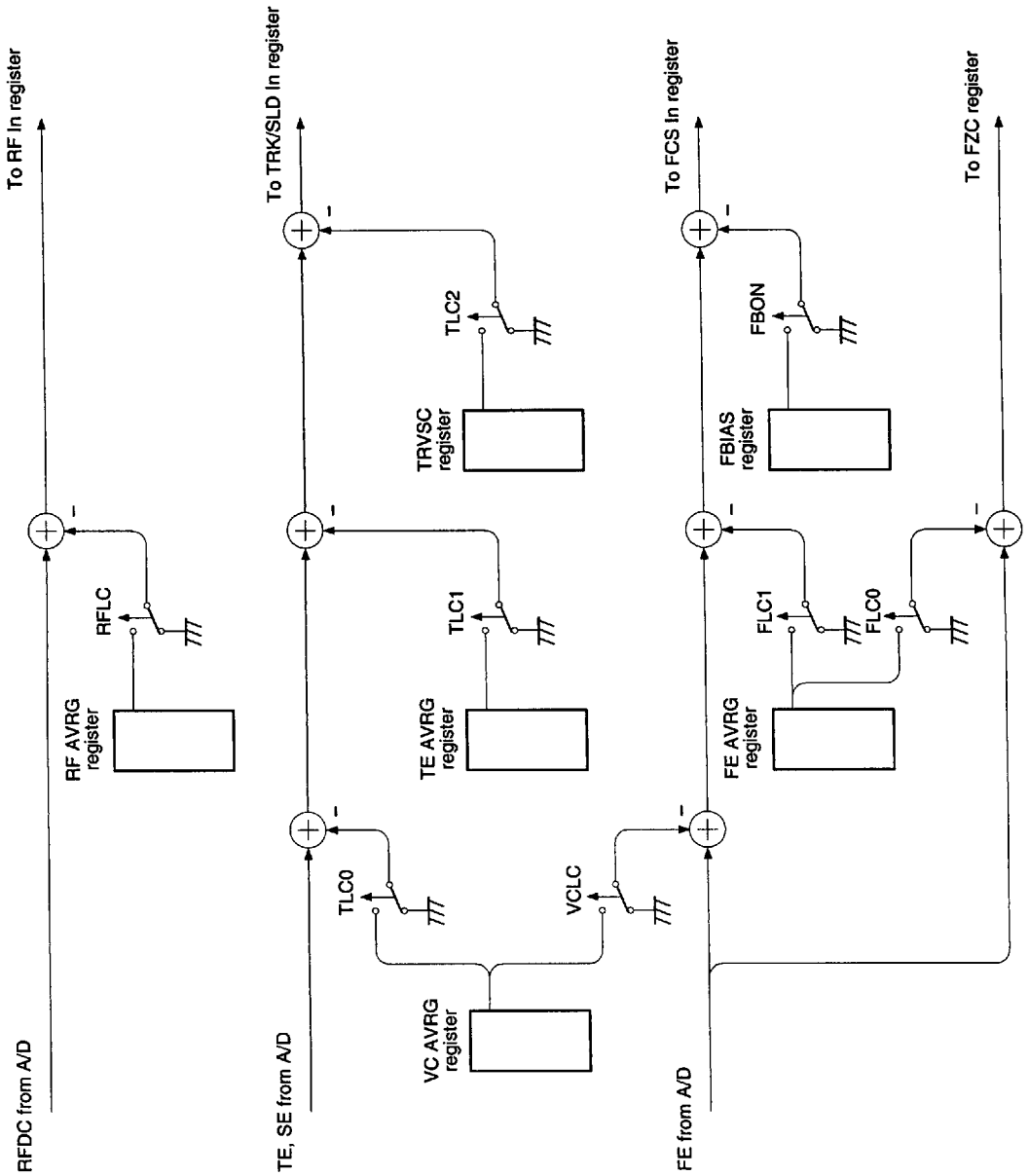


Fig. 3-3.



8382383 0015386 8T9

### §3-5. AGCNTL (Automatic Gain Control) Function

The AGCNTL function automatically adjusts the filter internal gain in order to obtain the appropriate gain with the servo loop. AGCNTL not only copes with the sensitivity variation of the actuator and photo diode, etc., but also obtains the optimal gain for each disc.
The AGCNTL command is sent when each servo is turned on. During AGCNTL operation, if the upper 8 bits of the input serial data are 38 (Hex), the termination of AGCNTL operation can be confirmed by monitoring the SENS pin (Pin 80). (See the Timing Chart 3-4 and the Description of SENS Signals.)
Setting D9 and D8 of $38 to 1 set FCS (focus) and TRK (tracking) respectively to AGCNTL operation.

**Note)** When performing AGCNTL operation, each servo filter must be in the gain normal status, and the anti-shock circuit (described hereafter) must be disabled.

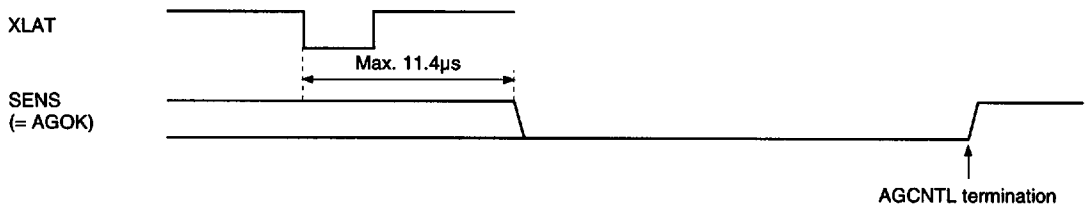


**Timing Chart 3-4.**

Coefficient K13 changes for AGF (focus AGCNTL) and coefficients K23 and K07 for AGT (tracking AGCNTL) due to AGCNTL.
These coefficients change from 01 to 7F (Hex), and they must also be set within this range when written externally.
After AGCNTL operation has terminated, these coefficient values can be confirmed by reading them out from the SENS pin with the serial readout function (described hereafter).

AGCNTL related settings

The following settings can be changed with $35, $36 and $37.

FG6 to FG0; AGF convergence gain setting, effective setting range: 00 to 57 (Hex)
TG6 to TG0; AGT convergence gain setting, effective setting range: 00 to 57 (Hex)
AGS; Self-stop on/off
AGJ; Convergence completion judgment time
AGGF; Internally generated sine wave amplitude (AGF)
AGGT; Internally generated sine wave amplitude (AGT)
AGV1; AGCNTL sensitivity 1 (during high sensitivity adjustment)
AGV2; AGCNTL sensitivity 2 (during low sensitivity adjustment)
AGHS; High sensitivity adjustment on/off
AGHT; High sensitivity adjustment time

**Note)** Converging servo loop gain values can be changed with the FG6 to 0 and TG6 to 0 setting values. In addition, these setting values must be within the effective setting range. The default settings aim for 0dB at 1kHz. However, since convergence values vary according to the characteristics of each constituent element of the servo loop, FG and TG values should be set as necessary.



8382383 0015387 735

AGCNTL and default operation have two stages.
In the first stage, high sensitivity adjustment is performed for a certain period of time (select 256/128ms with AGHT), and the AGCNTL coefficient approaches the appropriate value. The sensitivity at this time can be selected from two types with AGV1.
In the second stage, the AGCNTL coefficient is led reliably towards the appropriate value at a relatively low sensitivity. The sensitivity for the second stage can be selected from two types with AGV2. In the second stage of default operation, when the AGCNTL coefficient reaches the appropriate value and stops changing, the CXD2545Q confirms that the AGCNTL coefficient has not changed for a certain period of time (select 63/31ms with AGHJ), and then terminates AGCNTL operation. (Self-stop mode)
This self-stop mode can be canceled by rewriting AGS to 0.
In addition, the first stage is omitted for AGCNTL operation when AGHS is set to 0.
An example of AGCNTL coefficient transitions during AGCNTL operation and the relationship between the various settings are shown in Fig. 3-5.

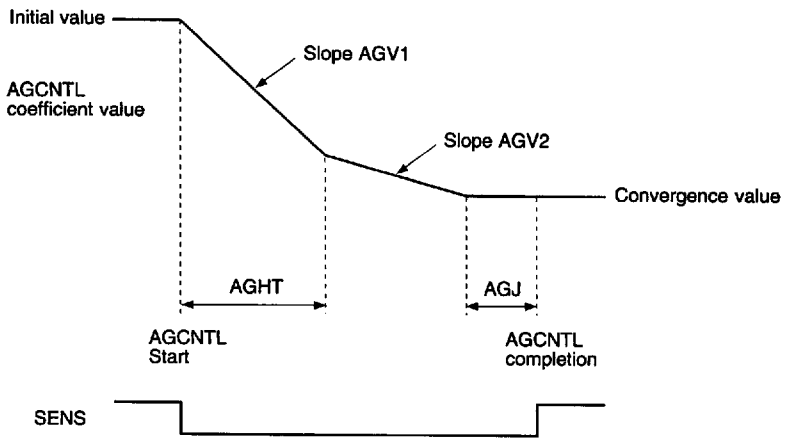


**Fig. 3-5.**



8382383 0015388 671

## §3-6. FCS Servo and FCS Search (Focus Search)

The FCS servo is controlled by the 8-bit serial command $0X. (See Table 3-6.)

| Register name | Command | D23 to D20 | D19 to D16 | |
|---|---|---|---|---|
| 0 | FOCUS CONTROL | 0 0 0 0 | 1 0 * * | FOCUS SERVO ON (FOCUS GAIN NORMAL) |
| | | | 1 1 * * | FOCUS SERVO ON (FOCUS GAIN DOWN) |
| | | | 0 * 0 * | FOCUS SERVO OFF, 0V OUT |
| | | | 0 * 1 * | FOCUS SERVO OFF, FOCUS SEARCH VOLTAGE OUT |
| | | | 0 * 1 0 | FOCUS SEARCH VOLTAGE DOWN |
| | | | 0 * 1 1 | FOCUS SEARCH VOLTAGE UP |

*: Don't care

**Table 3-6.**

### FCS Search

FCS search is required in the course of turning on the FCS servo.

Figs. 3-7 and 3-8 show the signals for sending commands $00 → $02 → $03 and performing only FCS search operation, and for moving from $03 to FCS on ($08).

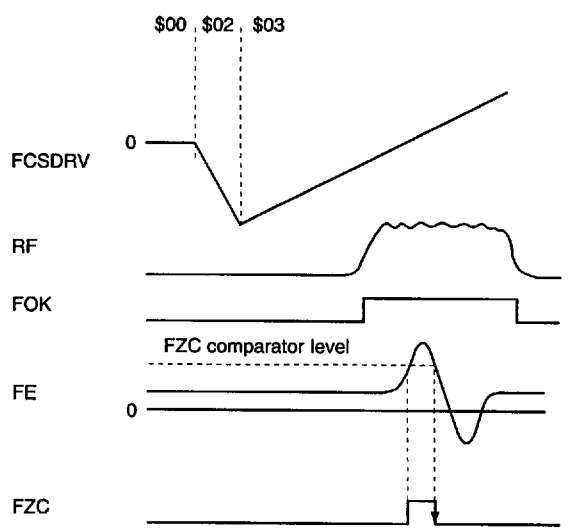


**Fig. 3-7.**

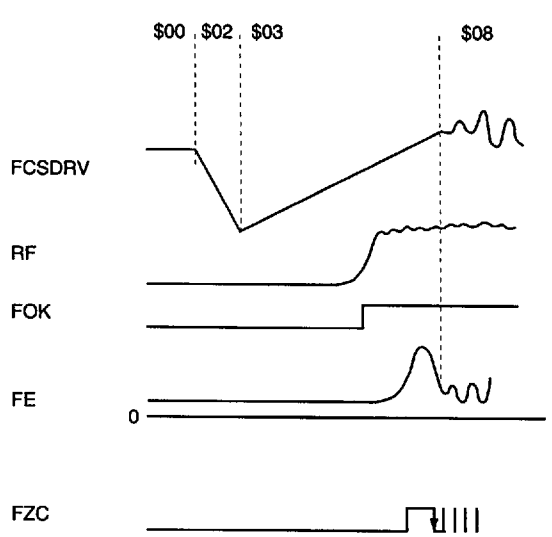


**Fig. 3-8.**



8382383 0015389 508

## §3-7. TRK (Tracking) and SLD (Sled) Servo Control

TRK and SLD servo control is performed by the 8-bit command $2X. (See Table 3-9.)
When the upper 4 bits of the serial data are 2 (Hex), TZC is output to the SENS pin.

| Register name | Command | D23 to D20 | D19 to D16 | |
|---|---|---|---|---|
| 2 | TRACKING MODE | 0 0 1 0 | 0 0 * * | TRACKING SERVO OFF |
| | | | 0 1 * * | TRACKING SERVO ON |
| | | | 1 0 * * | FORWARD TRACK JUMP |
| | | | 1 1 * * | REVERSE TRACK JUMP |
| | | | * * 0 0 | SLED SERVO OFF |
| | | | * * 0 1 | SLED SERVO ON |
| | | | * * 1 0 | FORWARD SLED MOVE |
| | | | * * 1 1 | REVERSE SLED MOVE |

*: Don't care

**Table 3-9.**

### TRK Servo

The TRK JUMP (track jump) height can be set with the 6 bits D13 to D8 of $36.
In addition, when the TRK servo is on, the TRK servo filter assumes gain-up status when D17 of $1 is set to 1.
The TRK servo filter also assumes gain-up status when vibration detection is performed with the LOCK signal (Pin 98) low and the anti-shock circuit (described hereafter) enabled.
The gain-up filter used when TRK has assumed gain up status has two types of structures which can be selected by setting D16 of $1. (See Table 3-17.)

### SLD Servo

The SLD MOV (sled move) output, composed of a basic value from the 6 bits D13 to D8 of $37, is determined by multiplying this value by the × 1, × 2, × 3 or × 4 magnification set using D17 and D16 when D19 = D18 = 0 is set with $3. (See Table 3-10.)
SLD MOV must be performed continuously for 50µs or more. In addition, if the LOCK input signal goes low when the SLD servo is on, the SLD servo turns off.

**Note)** When the LOCK signal is low, the operations which set the TRK servo to gain up status and turn off the SLD servo can be canceled by setting D6 (LKSW) of $38 to 1.

| Register name | Command | D23 to D20 | D19 to D16 | |
|---|---|---|---|---|
| 3 | SELECT | 0 0 1 1 | 0 0 0 0 | SLED KICK LEVEL (basic value × ±1) |
| | | | 0 0 0 1 | SLED KICK LEVEL (basic value × ±2) |
| | | | 0 0 1 0 | SLED KICK LEVEL (basic value × ±3) |
| | | | 0 0 1 1 | SLED KICK LEVEL (basic value × ±4) |

**Table 3-10.**



8382383 0015390 22T

## §3-8. MIRR and DFCT Signal Generation

The RF signal obtained from the RFDC pin (Pin 26) is sampled at approximately 1.4MHz and loaded.
The MIRR and DFCT signals are generated from this RF signal.

### MIRR Signal Generation

The loaded RF signal is applied to peak hold and bottom hold circuits.
An envelope is generated from the waveforms generated in these circuits, and the MIRR comparator level is generated from the average of these envelope waveforms.
The MIRR signal is generated by comparing this MIRR comparator level with the waveform generated by subtracting the bottom hold value from the peak hold value. (See Fig. 3-11.)

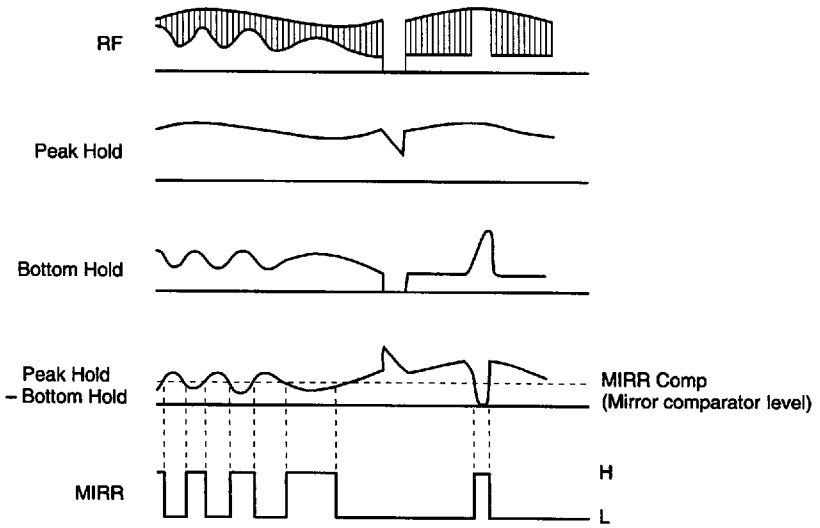


**Fig. 3-11.**

### DFCT Signal Generation

The loaded RF signal is input to two peak hold circuits with different time constants, and the DFCT signal is generated by comparing the difference between these two peak hold waveforms with the DFCT comparator level. (See Fig. 3-12.)
The DFCT comparator level can be selected from four values using D13 and D12 of $3B.

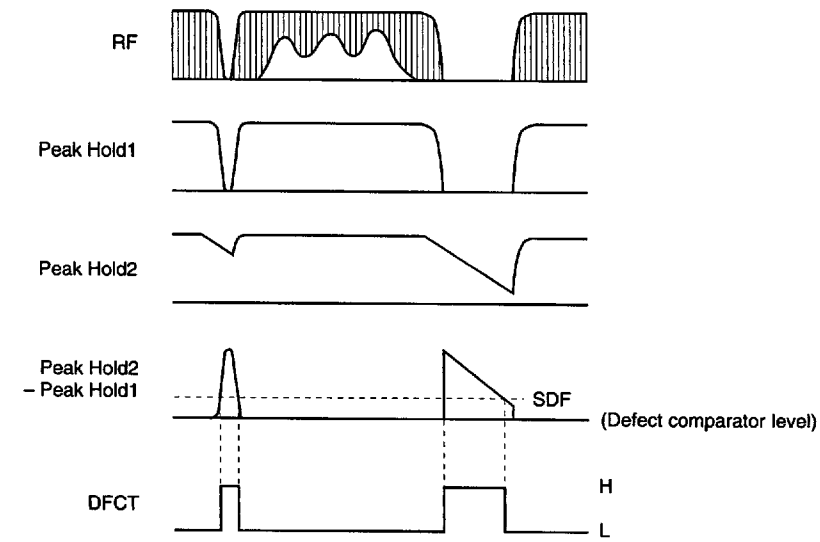


**Fig. 3-12.**



8382383 0015391 166

### §3-9. DFCT Countermeasure Circuit

The DFCT countermeasure circuit performs operations to maintain the directionality of the servo so that the servo does not become easily dislocated due to scratches or defects on discs.
Specifically, these operations are achieved by performing scratch and defect detection with the DFCT signal generation circuit, and when DFCT goes high, applying the low frequency element of the error signal before DFCT went high to the FCS and TRK servo filter inputs.
In addition, these operations are activated by the default. They can be disabled by setting D7 (DFSW) of $38 to 1 or by inputting high level to the DFSW pin (Pin 84).

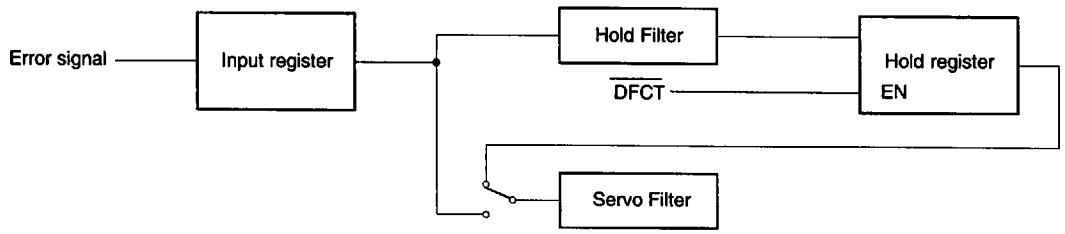


**Fig. 3-13.**

### §3-10. Anti-Shock Circuit

When vibrations are produced in the CD player, this circuit forces the TRK filter to assume gain-up status so that the servo does not become easily dislocated. This circuit should be considered for systems which require vibration countermeasures.
Specifically, vibrations are detected using an internal anti-shock filter and comparator circuit, and the gain is increased. (See Fig. 3-14.)
The comparator level is fixed to 1/16 of the maximum comparator input amplitude. However, the comparator level can essentially be adjusted by adjusting the value of the anti-shock filter output coefficient K35.
This function can be turned on and off by D19 of $1 when the brake circuit (described hereafter) is off. (See Table 3-17.)
This circuit can also support an external vibration detection circuit, and can also set the TRK servo filter to gain up status by inputting high level to the ATSK pin (Pin 85).
When the serial data is $1, vibration detection can be monitored from the SENS pin.

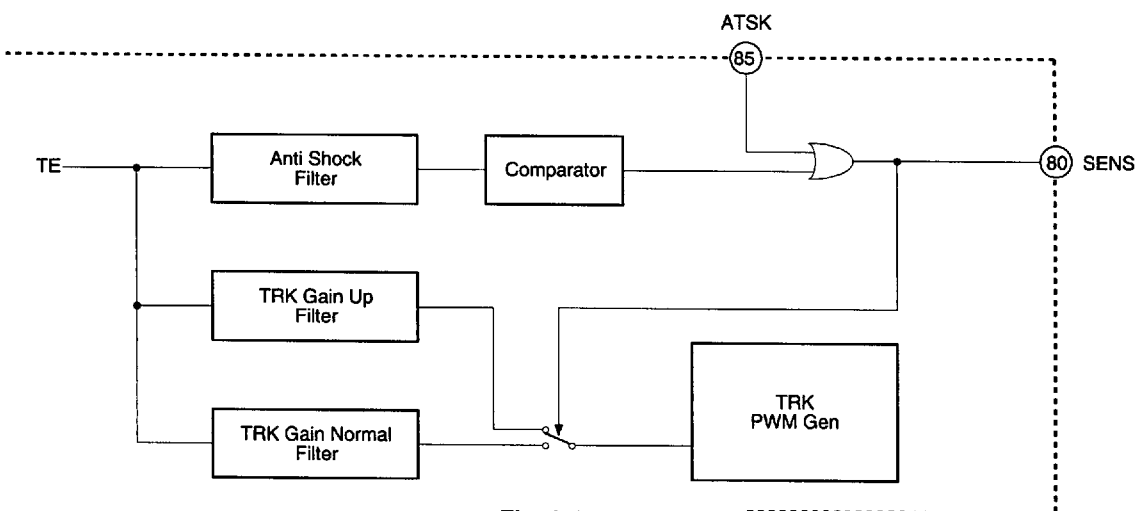


**Fig. 3-14.**



8382383 0015392 0T2

## §3-11. Brake Circuit

Immediately after a track jump of a certain size or more, the actuator setting worsens and it becomes difficult to return the servo suddenly to the on status.
The brake circuit prevents these types of phenomenon from occurring.
In principle, this circuit cuts unnecessary portions of the tracking drive and applies the brake by utilizing the 180° offset in the RF envelope and tracking error phase relationship which occurs when the actuator cuts across the track in the radial direction from the inner track to the outer track and vice versa. (See Figs. 3-15 and 3-16.)
Specifically, this operation is achieved by masking the tracking drive using the TRKCNCL signal generated by loading the MIRR signal at the edge of the TZC (Tracking Zero Cross) signal.
The brake circuit can be turned on and off by D18 of $1. (See Fig. 3-17.)

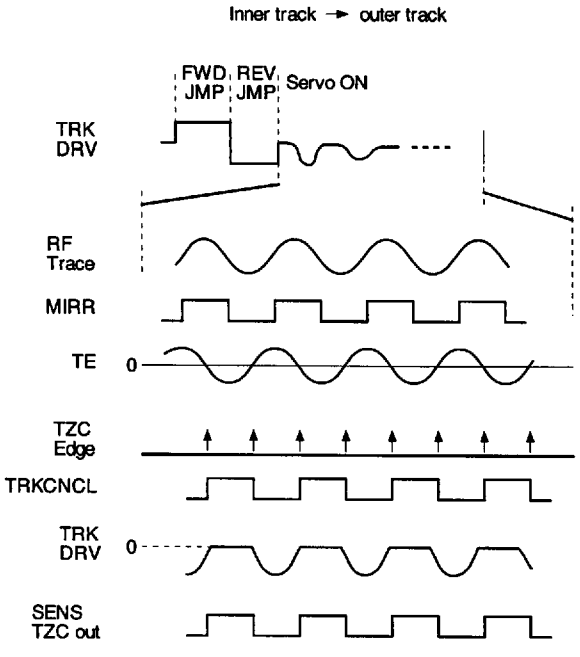


Fig. 3-15.

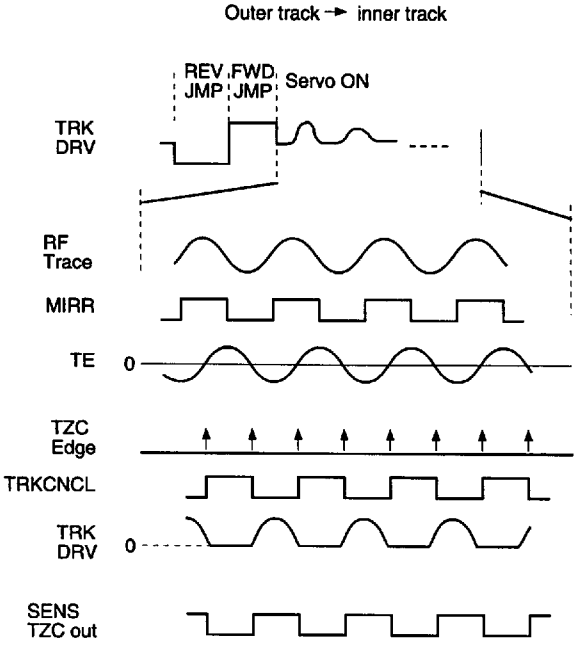


Fig. 3-16.

| Register name | Command | D23 to D20 | D19 to D16 | |
|---|---|---|---|---|
| 1 | TRACKING CONTROL | 0 0 0 1 | 1 0 * * | ANTI SHOCK ON |
| | | | 0 * * * | ANTI SHOCK OFF |
| | | | * 1 * * | BRAKE ON |
| | | | * 0 * * | BRAKE OFF |
| | | | * * 0 * | TRACKING GAIN NORMAL |
| | | | * * 1 * | TRACKING GAIN UP |
| | | | * * * 1 | TRACKING GAIN UP FILTER SELECT 1 |
| | | | * * * 0 | TRACKING GAIN UP FILTER SELECT 2 |

*: Don't care

Fig. 3-17.



8382383 0015393 T39

### §3-12. COUT Signal

The COUT signal is output in order to count the number of tracks passed over during traverse, etc. It is basically generated by loading the MIRR signal at both edges of the TZC signal. However, the used TZC signal can be selected and there are two types of output methods according to the COUT signal application.

1-track jumps, etc.
Fast phase COUT signal generation is performed using a fast phase TZC signal.

High-speed traverse
During high-speed traverse, reliable COUT signal generation is performed using a delayed phase TZC signal.

This is because some time is required to generate the MIRR signal, and it is necessary to delay the TZC signal in accordance with the MIRR signal delay during high-speed traverse.
The COUT signal output method is switched with D16 when D19 = D18 = 1 and D17 = 0 are set with $3. (when D16 = 1, for delayed phase and high-speed traverse). In addition, the TZC signal delay can be selected from two values with D14 of $36.

### §3-13. Serial Readout Circuit

The following measurement and adjustment results which have been specified in advance can be read out from the SENS pin (Pin 80) by inputting the readout clock to the SCLK pin (Pin 83) using serial command $39. (See Fig. 3-18, Table 3-19 and the Description of SENS Signals.)

Specified commands
- $390C: VC AVRG measurement result
- $3908: FE AVRG measurement result
- $3904: TE AVRG measurement result
- $391F: RF AVRG measurement result
- $3953: FCS AGCNTL coefficient result
- $3963: TRK AGCNTL coefficient result
- $391C: TRVSC adjustment result
- $391D: FBIAS register value

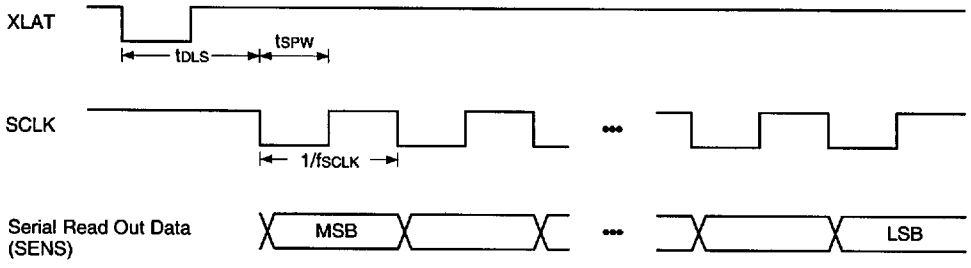


**Fig. 3-18.**

| Item | Symbol | Min. | Typ. | Max. | Unit |
|---|---|---|---|---|---|
| SCLK frequency | $f_{SCLK}$ | | | 1 | MHz |
| SCLK pulse width | $t_{SPW}$ | 500 | | | ns |
| Delay time | $t_{DLS}$ | 15 | | | µs |

**Table 3-19.**

During readout, the upper 8 bits of the serial data must be 39 (Hex).



8382383 0015394 975

### §3-14. Writing the Coefficient RAM

The coefficient RAM can be rewritten by $34. All coefficients have default values in the built-in ROM, and transfer from the ROM to the RAM is completed approximately 40µs after the XRST pin (Pin 81) rises. (The coefficient RAM cannot be rewritten during this period.)
After that, the characteristics of each built-in filter can be finely adjusted by rewriting the data for each address of the coefficient RAM.
The coefficient rewrite command is comprised of 24 bits, with D14 to D8 of $34 as the address (D15 = 0) and D7 to D0 as data.

### §3-15. PWM Output

FCS, TRK and SLD outputs are output as PWM waveforms.
In particular, FCS and TRK permit accurate drive by using a double oversampling noise shaper.
Timing Chart 3-20 and Figs. 3-21 and 3-22 show examples of output waveforms and drive circuits.

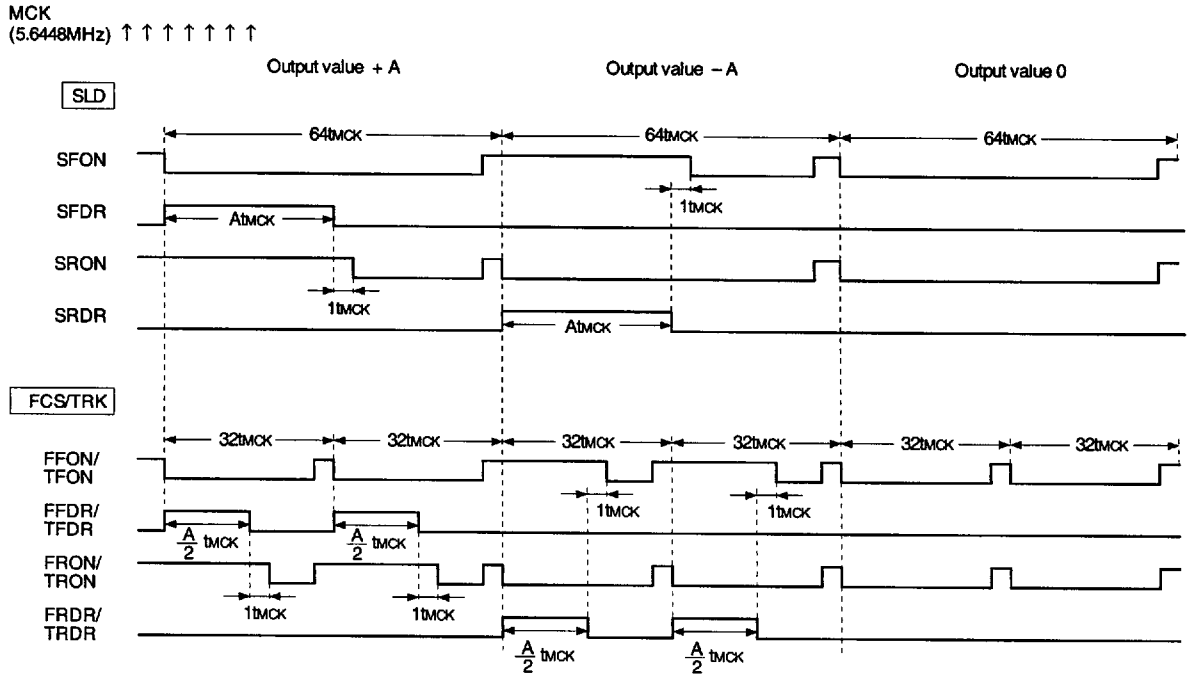


The ON signal (FON and RON) is active low.

$$t_{MCK} = \frac{1}{5.6448MHz} \approx 180ns$$

**Timing Chart 3-20.**



8382383 0015395 801

**Example of Driver Circuits**

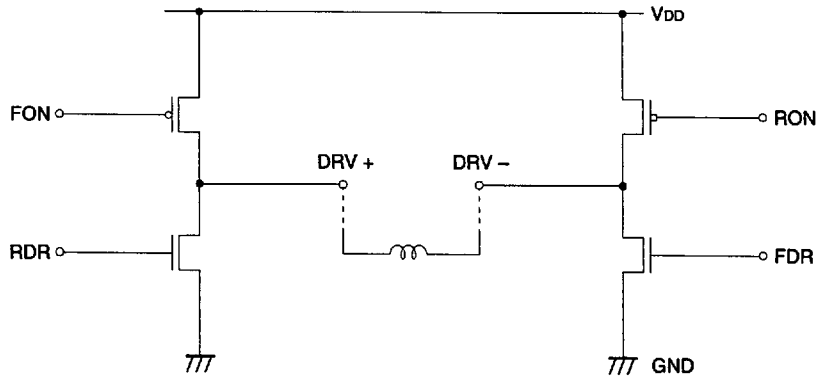


**Fig. 3-21. PWM Bridge Drive Circuit**

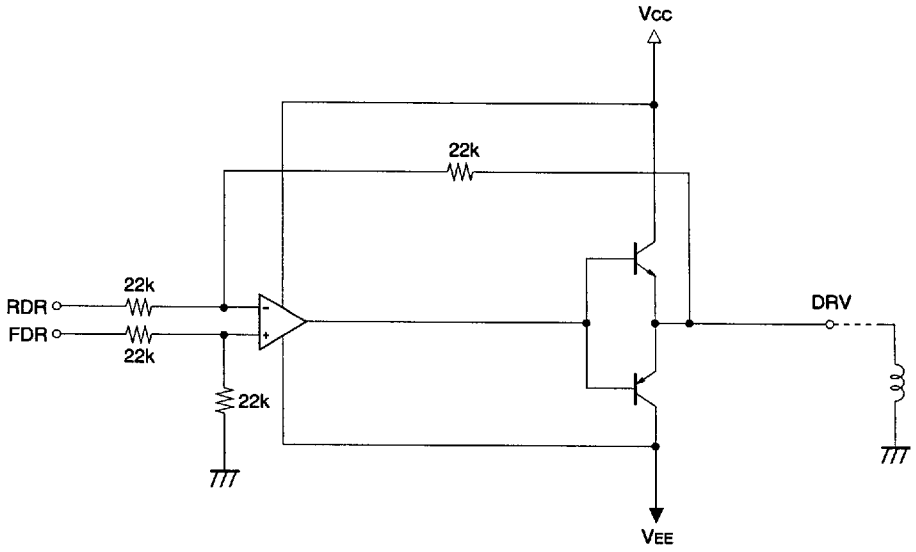


**Fig. 3-22. Operational Amplifier Drive Circuit**



8382383 0015396 748

### §3-16. DIRC Input Pin

The $2 command register can be changed by operating the DIRC input pin (Pin 82).
Using the DIRC pin allows serial data transfer to be simplified during TRKJMP.
Fig. 3-23 shows $2 command register changes produced by DIRC pin changes.
In addition, Timing Chart 3-24 shows DIRC-based operations during TRKJMP.
High level must be input to the DIRC pin when the XRST pin rises from low to high.

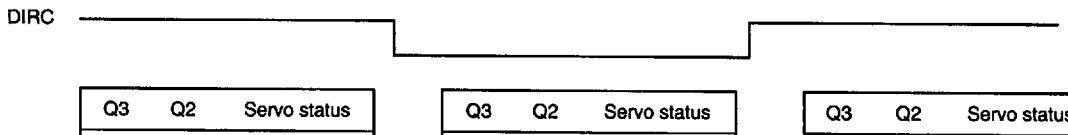


TRK

| Q3 | Q2 | Servo status |
|---|---|---|
| 0 | 0 | OFF |
| 0 | 1 | ON |
| 1 | 0 | FWD JMP |
| 1 | 1 | REV JMP |

⇒

| Q3 | Q2 | Servo status |
|---|---|---|
| 1 | 1 | REV JMP |
| 1 | 0 | FWD JMP |
| 1 | 1 | REV JMP |
| 1 | 0 | FWD JMP |

⇒

| Q3 | Q2 | Servo status |
|---|---|---|
| 0 | 1 | ON |
| 0 | 1 | ON |
| 0 | 1 | ON |
| 0 | 1 | ON |

SLD

| Q1 | Q0 | Servo status |
|---|---|---|
| 0 | 0 | OFF |
| 0 | 1 | ON |
| 1 | 0 | FWD MOV |
| 1 | 1 | REV MOV |

⇒

| Q1 | Q0 | Servo status |
|---|---|---|
| 0 | 0 | OFF |
| 0 | 1 | ON |
| 1 | 0 | FWD MOV |
| 1 | 1 | REV MOV |

⇒

| Q1 | Q0 | Servo status |
|---|---|---|
| 0 | 1 | ON |
| 0 | 1 | ON |
| 1 | 0 | FWD MOV |
| 1 | 1 | REV MOV |

Q3, Q2, Q1 and Q0 correspond to D19, D18, D17 and D16 of $2.

**Fig. 3-23.**

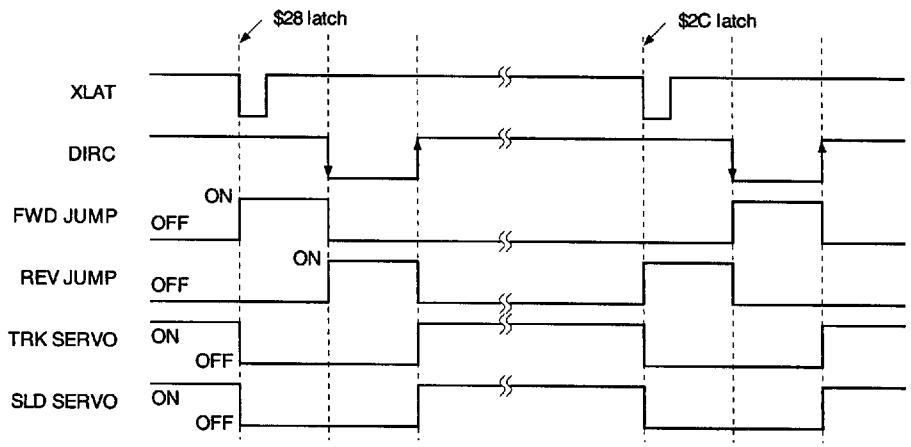


**Timing Chart 3-24.**



8382383 0015397 684

### §3-17. Servo Status Changes Produced by the LOCK Signal

When the LOCK signal becomes low, the TRK servo assumes the gain-up status and the SLD servo turns off in order to prevent SLD free-running.
Setting D6 (LKSW) of $38 to 1 deactivates this function.
In other words, neither the TRK servo nor the SLD servo change even when the LOCK signal becomes low.
This enables microcomputer control.



8382383 0015398 510

### §3-18. Description of Commands and Data Sets

The following description contains portions which convert internal voltages into the values when they are output externally and describe them as input conversion or output conversion.
Input conversion converts these voltages into the voltages entering input pins before A/D conversion.
Output conversion converts PWM output values into analog voltage values.
Both types of conversion are calculated at $V_{DD}$ = 5.0V. If this voltage changes, the conversion values also change proportionally. (Voltage conversion = $V_{DDX}$/5; $V_{DDX}$: used supply voltage)

**$34**

| D15 | D14 | D13 | D12 | D11 | D10 | D9 | D8 | D7 | D6 | D5 | D4 | D3 | D2 | D1 | D0 |
|---|---|---|---|---|---|---|---|---|---|---|---|---|---|---|---|
| 0 | KA6 | KA5 | KA4 | KA3 | KA2 | KA1 | KA0 | KD7 | KD6 | KD5 | KD4 | KD3 | KD2 | KD1 | KD0 |

When D15 = 0.
KA6 to KA0: Coefficient address
KD7 to KD0: Coefficient data

| D15 | D14 | D13 | D12 | D11 | D10 | D9 | D8 | D7 | D6 | D5 | D4 | D3 | D2 | D1 | D0 |
|---|---|---|---|---|---|---|---|---|---|---|---|---|---|---|---|
| 1 | 1 | 1 | 1 | 0 | 1 | FB9 | FB8 | FB7 | FB6 | FB5 | FB4 | FB3 | FB2 | FB1 | — |

When D15 = D14 = D13 = D12 = 1. ($34F)
D11 = 0, D10 = 1
FBIAS register write
FB9 to FB1: Data; FB9 is MSB two's complement data.
For FE input conversion, FB9 to FB1 = 011111111 corresponds to +1V and FB9 to FB1 = 100000000 to –1V respectively. (when the supply voltage = 5V)

| D15 | D14 | D13 | D12 | D11 | D10 | D9 | D8 | D7 | D6 | D5 | D4 | D3 | D2 | D1 | D0 |
|---|---|---|---|---|---|---|---|---|---|---|---|---|---|---|---|
| 1 | 1 | 1 | 1 | 0 | 0 | TV9 | TV8 | TV7 | TV6 | TV5 | TV4 | TV3 | TV2 | TV1 | TV0 |

When D15 = D14 = D13 = D12 = 1. ($34F)
D11 = 0, D10 = 0
TRVSC register write
TV9 to TV0: Data; TV9 is MSB two's complement data.
For TE input conversion, TV9 to TV0 = 0011111111 corresponds to +1V and TV9 to TV0 = 1100000000 to –1V respectively. (when the supply voltage = 5V)

**Note)**
- When the TRVSC register is read out, the data length is 9 bits. At this time, data corresponding to each bit of TV8 to TV0 during external write are read out.
- When reading out internally measured values and then writing these values externally, set TV9 the same as TV8.



8382383 0015399 457

**$35**

| D15 | D14 | D13 | D12 | D11 | D10 | D9 | D8 | D7 | D6 | D5 | D4 | D3 | D2 | D1 | D0 |
|---|---|---|---|---|---|---|---|---|---|---|---|---|---|---|---|
| FT1 | FT0 | FS5 | FS4 | FS3 | FS2 | FS1 | FS0 | FTZ | FG6 | FG5 | FG4 | FG3 | FG2 | FG1 | FG0 |

FT1, FT0, FTZ: Focus search-up speed

Default value: 010 (3.36V/s)

Focus drive output conversion

| FT1 | FT0 | FTZ | Focus search speed |
|---|---|---|---|
| 0 | 0 | 0 | 6.73 V/s |
| 0 | 1 | 0 | 3.36 |
| 1 | 0 | 0 | 2.24 |
| 1 | 1 | 0 | 1.68 |
| 0 | 0 | 1 | 8.97 |
| 0 | 1 | 1 | 5.38 |
| 1 | 0 | 1 | 4.49 |
| 1 | 1 | 1 | 3.85 |

FS5 to FS0: Focus search limit voltage

Default value: 011000 (±1.875V)

Focus drive output conversion

FG6 to FG0: AGF convergence gain setting value

Default value: 0101101

**$36**

| D15 | D14 | D13 | D12 | D11 | D10 | D9 | D8 | D7 | D6 | D5 | D4 | D3 | D2 | D1 | D0 |
|---|---|---|---|---|---|---|---|---|---|---|---|---|---|---|---|
| 0 | DTZC | TJ5 | TJ4 | TJ3 | TJ2 | TJ1 | TJ0 | 0 | TG6 | TG5 | TG4 | TG3 | TG2 | TG1 | TG0 |

DTZC: DTZC delay (8.5/4.25µs)

Default value: 0 (4.25µs)

TJ5 to TJ0: Track jump voltage

Default value: 001110 (≈ ±1.09V)

Tracking drive output conversion

TG6 to TG0: AGT convergence gain setting value

Default value: 0101110



8382383 0015400 TT9

**$37**

| D15 | D14 | D13 | D12 | D11 | D10 | D9 | D8 | D7 | D6 | D5 | D4 | D3 | D2 | D1 | D0 |
|---|---|---|---|---|---|---|---|---|---|---|---|---|---|---|---|
| FZSH | FZSL | SM5 | SM4 | SM3 | SM2 | SM1 | SM0 | AGS | AGJ | AGGF | AGGT | AGV1 | AGV2 | AGHS | AGHT |

FZSH, FZSL: FZC (Focus Zero Cross) slice level
Default value: 01 (+250mV); FE input conversion

| FZSH | FZSL | Slice level |
|---|---|---|
| 0 | 0 | +500mV |
| 0 | 1 | +250 |
| 1 | 0 | +125 |
| 1 | 1 | +62.5 |

SM5 to SM0: Sled move voltage
Default value: 010000 (≈ ±1.25V)
Sled drive output conversion

AGS: AGCNTL self-stop on/off
Default value: 1 (on)

AGJ: AGCNTL convergence completion judgment time during low sensitivity adjustment (31/63ms)
Default value: 0 (63ms)

AGGF: Focus AGCNTL internally generated sine wave amplitude (small/large)
Default value: 1 (large)

AGGT: Tracking AGCNTL internally generated sine wave amplitude (small/large)
Default value: 1 (large)

| | | FE/TE input conversion |
|---|---|---|
| AGGF | 0 (small) | 63mV |
| | 1 (large) | 125 |
| AGGT | 0 (small) | 125mV |
| | 1 (large) | 250 |

AGV1: AGCNTL convergence sensitivity during high sensitivity adjustment; high/low
Default value: 1 (high)

AGV2: AGCNTL convergence sensitivity during low sensitivity adjustment; high/low
Default value: 0 (low)

AGHS: AGCNTL high sensitivity adjustment on/off
Default value: 1 (on)

AGHT: AGCNTL high sensitivity adjustment time (128/256ms)
Default value: 0 (256ms)



8382383 0015401 935

**$38**

| D15 | D14 | D13 | D12 | D11 | D10 | D9 | D8 | D7 | D6 | D5 | D4 | D3 | D2 | D1 | D0 |
|---|---|---|---|---|---|---|---|---|---|---|---|---|---|---|---|
| VCLM | VCLC | FLM | FLC0 | RFLM | RFLC | AGF | AGT | DFSW | LKSW | TBLM | TCLM | FLC1 | TLC2 | TLC1 | TLC0 |

◎ VCLM: VC level measurement (on/off)
VCLC: VC level compensation for FCS In register (on/off)
◎ FLM: Focus zero level measurement (on/off)
FLC0: Focus zero level compensation for FZC register (on/off)
◎ RFLM: RF zero level measurement (on/off)
RFLC: RF zero level compensation (on/off)
AGF: Focus automatic gain adjustment (on/off)
AGT: Tracking automatic gain adjustment (on/off)
DFSW: Defect disable switch (on/off)
Setting this switch to 1(on) disables the defect countermeasure circuit.
LKSW: Lock switch (on/off)
Setting this switch to 1 disables the sled free-running prevention circuit.
TBLM: Traverse center measurement (on/off)
◎ TCLM: Tracking zero level measurement (on/off)
FLC1: Focus zero level compensation for FCS In register (on/off)
TLC2: Traverse center compensation (on/off)
TLC1: Tracking zero level compensation (on/off)
TLC0: VC level compensation for TRK/SLD In register (on/off)

**Note)** Commands marked with ◎ are accepted every 2.9ms.
All commands are on when set to 1.



8382383 0015402 871

**$39**

| D15 | D14 | D13 | D12 | D11 | D10 | D9 | D8 |
|---|---|---|---|---|---|---|---|
| DAC | SD6 | SD5 | SD4 | SD3 | SD2 | SD1 | SD0 |

DAC: Serial data readout DAC mode (on/off)

SD6 to SD0: Serial readout data select

| SD6 | SD5 | Readout data | | | Readout data length |
|---|---|---|---|---|---|
| 1 | Address = coefficient RAM data for (SD5 to SD0) | | | | 8 bit |
| 0 | 1 | Address = Data RAM data for (SD4 to SD0) | | | 16 bit |
| 0 | 0 | SD4 | SD3 to SD0 | | |
| | | 1 | 1 1 1 1 | RF AVRG register | 8 bit |
| | | | 1 1 1 0 | RFDC input signal | 8 bit |
| | | | 1 1 0 1 | FBIAS register | 9 bit |
| | | | 1 1 0 0 | TRVSC register | 9 bit |
| | | | 0 0 1 1 | RFDC envelope (bottom) | 8 bit |
| | | | 0 0 1 0 | RFDC envelope (peak) | 8 bit |
| | | 0 | 1 1 * * | VC AVRG register | 9 bit |
| | | | 1 0 * * | FE AVRG register | 9 bit |
| | | | 0 1 * * | TE AVRG register | 9 bit |
| | | | 0 0 1 1 | FE input signal | 8 bit |
| | | | 0 0 1 0 | TE input signal | 8 bit |
| | | | 0 0 0 1 | SE input signal | 8 bit |
| | | | 0 0 0 0 | VC input signal | 8 bit |

**Note)** Coefficients K40 to K4F cannot be read out. *: Don't care

See the description for SRO1 and SRO0 of $3F concerning readout methods for the above data.

**$3A**

FBON: FBIAS (focus bias) register addition (on/off)

The FBIAS register value is added to the signal loaded into the FCS In register by setting D14 to 1 (on).

**$3B**

| D15 | D14 | D13 | D12 | D11 | D10 | D9 | D8 | D7 | D6 | D5 | D4 |
|---|---|---|---|---|---|---|---|---|---|---|---|
| SFO2 | SFO1 | SDF2 | SDF1 | MAX2 | MAX1 | SFOX | BTF | D2V2 | D2V1 | D1V2 | D1V1 |

SFOX, SFO2, SFO1: FOK slice level

Default value: 011 (313mV)

RFDC input conversion

| SFOX | SFO2 | SFO1 | Slice level |
|---|---|---|---|
| 0 | 0 | 0 | 179mV |
| 0 | 0 | 1 | 223 |
| 0 | 1 | 0 | 268 |
| 0 | 1 | 1 | 313 |
| 1 | 0 | 0 | 357 |
| 1 | 0 | 1 | 446 |
| 1 | 1 | 0 | 536 |
| 1 | 1 | 1 | 625 |



8382383 0015403 708

SDF2, SDF1: DFCT slice level
Default value: 10 (179 mV)
RFDC input conversion

| SDF2 | SDF1 | Slice level |
|---|---|---|
| 0 | 0 | 89mV |
| 0 | 1 | 134 |
| 1 | 0 | 179 |
| 1 | 1 | 224 |

MAX2, MAX1: DFCT maximum time
Default value: 00 (no timer limit)

| MAX2 | MAX1 | DFCT maximum time |
|---|---|---|
| 0 | 0 | No timer limit |
| 0 | 1 | 2.00ms |
| 1 | 0 | 2.36 |
| 1 | 1 | 2.72 |

BTF: Bottom hold double-speed count-up mode for MIRR signal generation
On/off (default: off)
On when set to 1.

D2V2, D2V1: Peak hold 2 for DFCT signal generation
Count-down speed setting
Default value: 01 (0.492V/ms, 44.1kHz)
[V/ms] unit items indicate RFDC input conversion; [kHz] unit items indicate the operating frequency of the internal counter.

| D2V2 | D2V1 | Count-down speed | |
|---|---|---|---|
| | | [V/ms] | [kHz] |
| 0 | 0 | 0.246 | 22.05 |
| 0 | 1 | 0.492 | 44.1 |
| 1 | 0 | 0.984 | 88.2 |
| 1 | 1 | 1.969 | 176.4 |

D1V2, D1V1: Peak hold 1 for DFCT signal generation
Count down speed setting
Default value: 01 (3.938V/ms, 352.8kHz)
[V/ms] unit items indicate RFDC input conversion; [kHz] unit items indicate the operating frequency of the internal counter.

| D1V2 | D1V1 | Count-down speed | |
|---|---|---|---|
| | | [V/ms] | [kHz] |
| 0 | 0 | 1.969 | 176.4 |
| 0 | 1 | 3.938 | 352.8 |
| 1 | 0 | 7.875 | 705.6 |
| 1 | 1 | 15.75 | 1411.2 |



8382383 0015404 644

**$3E**

| D15 | D14 | D13 | D12 | D11 | D10 | D9 | D8 | D7 | D6 | D5 |
|---|---|---|---|---|---|---|---|---|---|---|
| F1NM | F1DM | F3NM | F3DM | T1NM | T1UM | T3NM | T3UM | DFIS | TLCD | RFLP |

F1NM, F1DM: Quasi double accuracy setting for FCS servo filter first-stage
On when set to 1; default = 0.
F1NM: Gain normal
F1DM: Gain down

T1NM, T1UM: Quasi double accuracy setting for TRK servo filter first-stage
On when set to 1; default = 0.
T1NM: Gain normal
T1UM: Gain up

F3NM, F3DM: Quasi double accuracy setting for FCS servo filter third-stage
On when set to 1; default = 0.
Generally, the advance amount of the phase becomes large by partially setting the FCS servo third-stage filter which is used as the phase compensation filter to double accuracy.
F3NM: Gain normal
F3DM: Gain down

T3NM, T3UM: Quasi double accuracy setting for TRK servo filter third-stage
On when set to 1; default = 0.
Generally, the advance amount of the phase becomes large by partially setting the TRK servo third-stage filter which is used as the phase compensation filter to double accuracy.
T3NM: Gain normal
T3UM: Gain up

**Note)** Filter first- and third-stage quasi double accuracy settings can be set individually.
See FILTER Composition at the end of this specification concerning quasi double-accuracy.

DFIS: FCS hold filter input extraction node selection
0: M05 (Data RAM address 05); default
1: M04 (Data RAM address 04)

TLCD: This command masks the TLC2 command set by D2 of $38 only when FOK is low.
On when set to 1; default = 0
RFLP: This command passes the signal obtained from the RFDC pin through the LPF (low-pass filter) before the built-in A/D converter.
0: LPF off; default
1: LPF on



8382383 0015405 580

**$3F**

| D15 | D14 | D13 | D12 | D11 | D10 | D9 | D8 | D7 | D6 | D5 | D4 | D3 | D2 | D1 | D0 |
|---|---|---|---|---|---|---|---|---|---|---|---|---|---|---|---|
| 0 | 0 | XT4D | XT2D | 0 | DRR2 | DRR1 | DRR0 | 0 | ASFG | 0 | LPAS | SRO1 | SRO0 | 0 | 0 |

XT4D, XT2D: MCK (digital servo master clock) frequency division setting
This command forcibly sets the frequency division ratio to 1/4 or 1/2 when MCK is generated from the signal input to the FSTI pin.

| XT4D | XT2D | Frequency division ratio |
|---|---|---|
| 0 | 0 | According to XTSL (default) |
| 0 | 1 | 1/2 |
| 1 | 0 | 1/4 |

DRR2 to DRR0: Partially clears the Data RAM values (0 write).
The following values are cleared when set to 1 (on) respectively; default = 0
DRR2: M08, M09, M0A
DRR1: M00, M01, M02
DRR0: M00, M01, M02 only when LOCK = low
**Note)** Set DRR1 and DRR0 so that they are on continuously for 50µs or more.

ASFG: When vibration detection is performed during anti-shock circuit operation, the TRK servo filter is set to the gain-up status, and forcibly FCS servo filter to gain normal status.
On when set to 1; default = 0

LPAS: Built-in analog buffer low-current consumption mode
This mode suppresses the total analog buffer current consumption for the VC, TE, SE and FE input analog buffers by using a single operational amplifier.
On when set to 1; default = 0
**Note)** When using this mode, first check whether each error signal is being properly A/D converted using the SRO1 and SRO0 commands of $3F.

SRO1, SRO0: These commands are used to continuously externally output various data in the digital servo block which have been specified with the $39 command. (However, D15 (DAC) of $39 must be set to 1.)
Digital output can be obtained from three specified pins (SOCK, XOLT and SOUT) by setting these commands to 1 respectively. The default is 0, 0.

The output pins for each case are shown below.

| | SRO1 = 1 | SRO0 = 1 |
|---|---|---|
| SOCK | DA13 (49) | DA10 (52) |
| XOLT | DA12 (50) | DA09 (53) |
| SOUT | DA14 (48) | DA11 (51) |

(See the Description of Data Readout on the following page.)



8382383 0015406 417

## Description of Data Readout

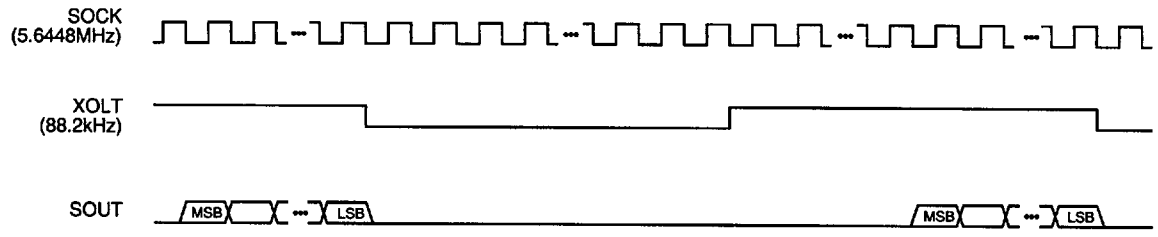


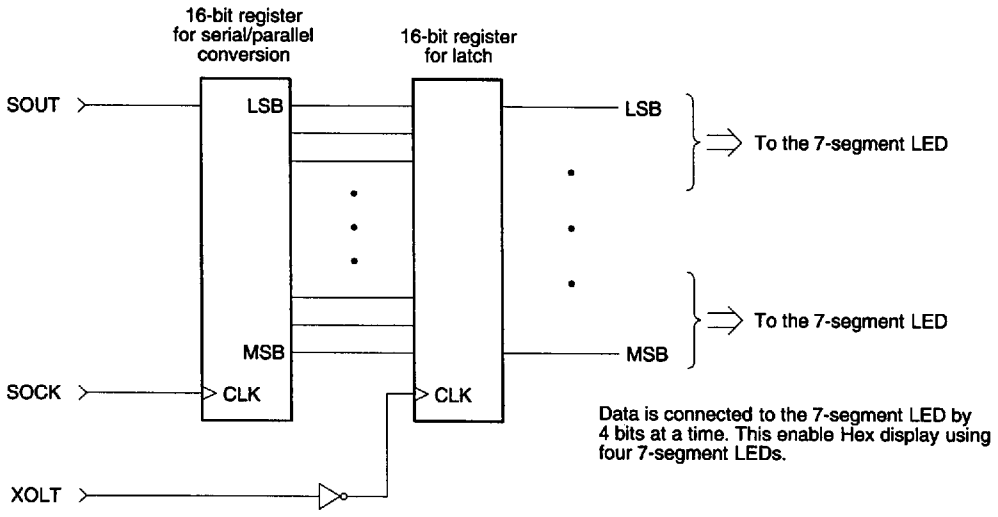


Data is connected to the 7-segment LED by 4 bits at a time. This enable Hex display using four 7-segment LEDs.

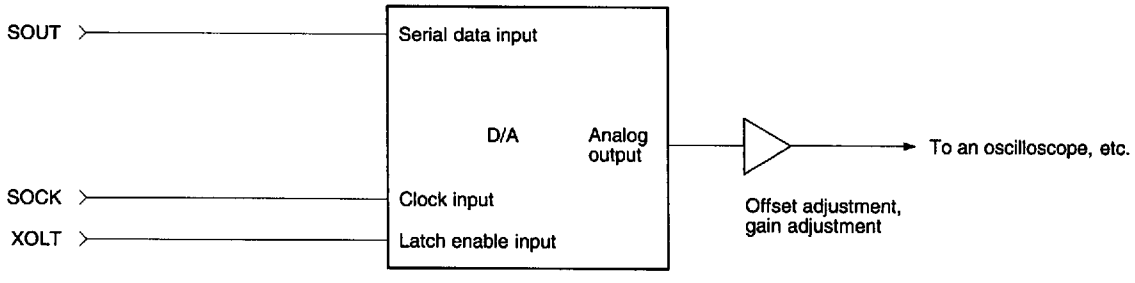


Waveforms can be monitored with an oscilloscope using a serial input-type D/A converter as shown above.



8382383 0015407 353

## §3-19. List of Servo Filter Coefficients

**<Coefficient Preset Value Table (1)>**

| ADDRESS | DATA | CONTENTS |
|---|---|---|
| K00 | E0 | SLED INPUT GAIN |
| K01 | 81 | SLED LOW BOOST FILTER A-H |
| K02 | 23 | SLED LOW BOOST FILTER A-L |
| K03 | 7F | SLED LOW BOOST FILTER B-H |
| K04 | 6A | SLED LOW BOOST FILTER B-L |
| K05 | 10 | SLED OUTPUT GAIN |
| K06 | 14 | FOCUS INPUT GAIN |
| K07 | 30 | SLED AUTO GAIN |
| K08 | 7F | FOCUS HIGH CUT FILTER A |
| K09 | 46 | FOCUS HIGH CUT FILTER B |
| K0A | 81 | FOCUS LOW BOOST FILTER A-H |
| K0B | 1C | FOCUS LOW BOOST FILTER A-L |
| K0C | 7F | FOCUS LOW BOOST FILTER B-H |
| K0D | 58 | FOCUS LOW BOOST FILTER B-L |
| K0E | 82 | FOCUS PHASE COMPENSATE FILTER A |
| K0F | 7F | FOCUS DEFECT HOLD GAIN |
| K10 | 4E | FOCUS PHASE COMPENSATE FILTER B |
| K11 | 32 | FOCUS OUTPUT GAIN |
| K12 | 20 | ANTI SHOCK INPUT GAIN |
| K13 | 30 | FOCUS AUTO GAIN |
| K14 | 80 | HPTZC / Auto Gain HIGH PASS FILTER A |
| K15 | 77 | HPTZC / Auto Gain HIGH PASS FILTER B |
| K16 | 80 | ANTI SHOCK HIGH PASS FILTER A |
| K17 | 77 | HPTZC / Auto Gain LOW PASS FILTER B |
| K18 | 00 | Fix* |
| K19 | F1 | TRACKING INPUT GAIN |
| K1A | 7F | TRACKING HIGH CUT FILTER A |
| K1B | 3B | TRACKING HIGH CUT FILTER B |
| K1C | 81 | TRACKING LOW BOOST FILTER A-H |
| K1D | 44 | TRACKING LOW BOOST FILTER A-L |
| K1E | 7F | TRACKING LOW BOOST FILTER B-H |
| K1F | 5E | TRACKING LOW BOOST FILTER B-L |
| K20 | 82 | TRACKING PHASE COMPENSATE FILTER A |
| K21 | 44 | TRACKING PHASE COMPENSATE FILTER B |
| K22 | 18 | TRACKING OUTPUT GAIN |
| K23 | 30 | TRACKING AUTO GAIN |
| K24 | 7F | FOCUS GAIN DOWN HIGH CUT FILTER A |
| K25 | 46 | FOCUS GAIN DOWN HIGH CUT FILTER B |
| K26 | 81 | FOCUS GAIN DOWN LOW BOOST FILTER A-H |
| K27 | 3A | FOCUS GAIN DOWN LOW BOOST FILTER A-L |
| K28 | 7F | FOCUS GAIN DOWN LOW BOOST FILTER B-H |
| K29 | 66 | FOCUS GAIN DOWN LOW BOOST FILTER B-L |
| K2A | 82 | FOCUS GAIN DOWN PHASE COMPENSATE FILTER A |
| K2B | 44 | FOCUS GAIN DOWN DEFECT HOLD GAIN |
| K2C | 4E | FOCUS GAIN DOWN PHASE COMPENSATE FILTER B |
| K2D | 1B | FOCUS GAIN DOWN OUTPUT GAIN |
| K2E | 00 | NOT USED |
| K2F | 00 | NOT USED |



8382383 0015408 29T

**<Coefficient ROM Preset Value Table (2)>**

| ADDRESS | DATA | CONTENTS |
|---|---|---|
| K30 | 80 | Fix* |
| K31 | 66 | ANTI SHOCK LOW PASS FILTER B |
| K32 | 00 | NOT USED |
| K33 | 7F | ANTI SHOCK HIGH PASS FILTER B-H |
| K34 | 6E | ANTI SHOCK HIGH PASS FILTER B-L |
| K35 | 20 | ANTI SHOCK FILTER COMPARATE GAIN |
| K36 | 7F | TRACKING GAIN UP2 HIGH CUT FILTER A |
| K37 | 3B | TRACKING GAIN UP2 HIGH CUT FILTER B |
| K38 | 80 | TRACKING GAIN UP2 LOW BOOST FILTER A-H |
| K39 | 44 | TRACKING GAIN UP2 LOW BOOST FILTER A-L |
| K3A | 7F | TRACKING GAIN UP2 LOW BOOST FILTER B-H |
| K3B | 77 | TRACKING GAIN UP2 LOW BOOST FILTER B-L |
| K3C | 86 | TRACKING GAIN UP PHASE COMPENSATE FILTER A |
| K3D | 0D | TRACKING GAIN UP PHASE COMPENSATE FILTER B |
| K3E | 57 | TRACKING GAIN UP OUTPUT GAIN |
| K3F | 00 | NOT USED |
| K40 | 04 | TRACKING HOLD FILTER INPUT GAIN |
| K41 | 7F | TRACKING HOLD FILTER A-H |
| K42 | 7F | TRACKING HOLD FILTER A-L |
| K43 | 79 | TRACKING HOLD FILTER B-H |
| K44 | 17 | TRACKING HOLD FILTER B-L |
| K45 | 6D | TRACKING HOLD FILTER OUTPUT GAIN |
| K46 | 00 | NOT USED |
| K47 | 00 | NOT USED |
| K48 | 02 | FOCUS HOLD FILTER INPUT GAIN |
| K49 | 7F | FOCUS HOLD FILTER A-H |
| K4A | 7F | FOCUS HOLD FILTER A-L |
| K4B | 79 | FOCUS HOLD FILTER B-H |
| K4C | 17 | FOCUS HOLD FILTER B-L |
| K4D | 54 | FOCUS HOLD FILTER OUTPUT GAIN |
| K4E | 00 | NOT USED |
| K4F | 00 | NOT USED |

* Fix indicates that normal preset values should be used.



8382383 0015409 126

## §3-20. FILTER Composition

The internal filter composition is shown below.
K * * and M * * indicate coefficient RAM and Data RAM address values respectively.

### FCS Servo Gain Normal; fs = 88.2kHz

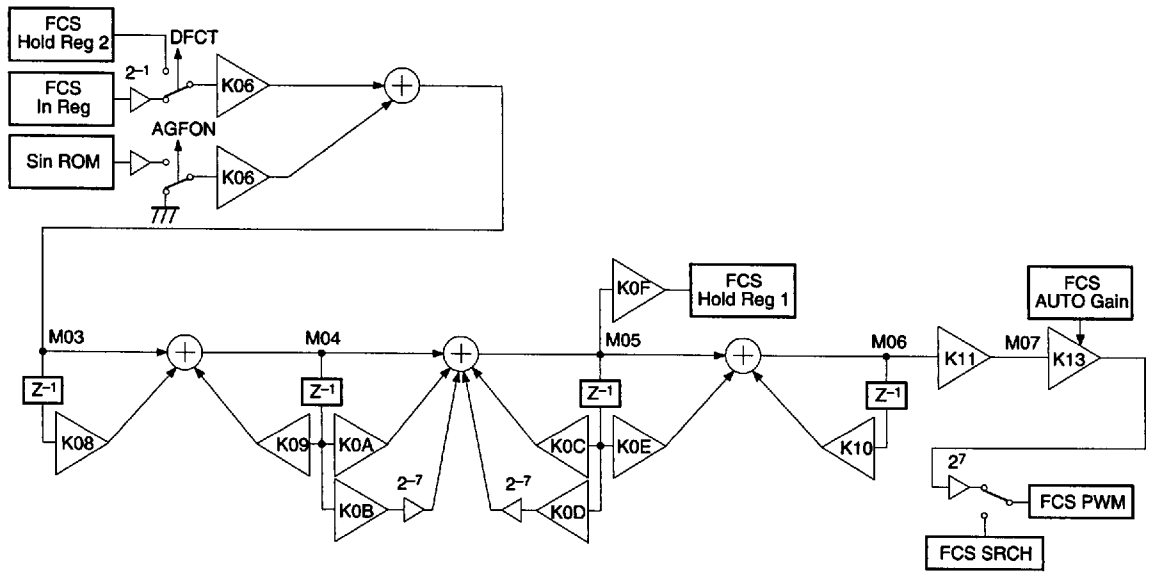


Note) Set the MSB bit of the K0B and K0D coefficients to 0.

### FCS Servo Gain Down; fs = 88.2kHz

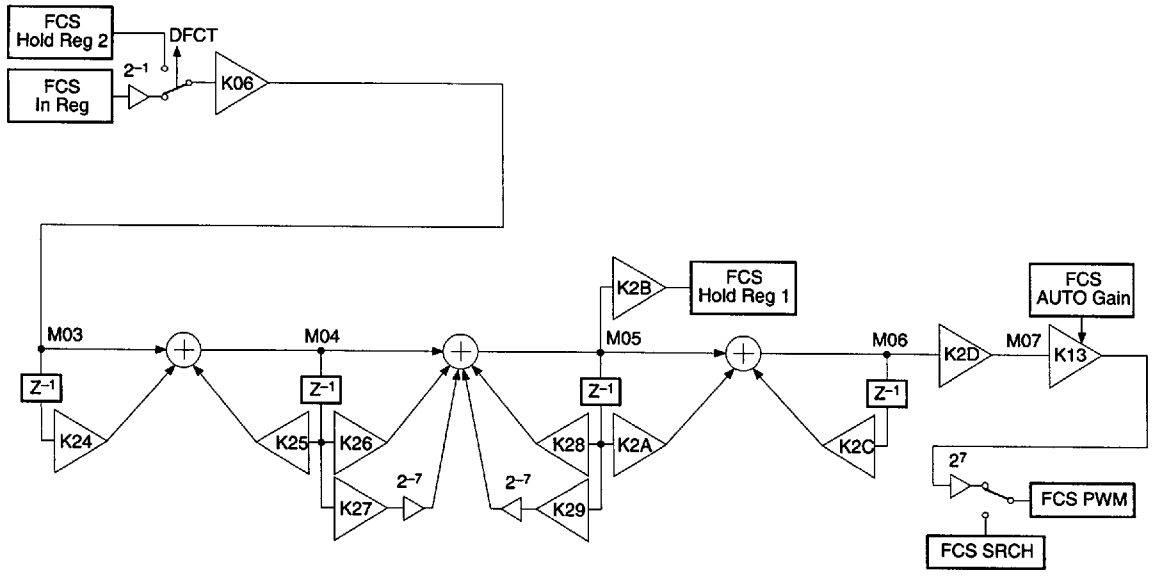


Note) Set the MSB bit of the K27 and K29 coefficients to 0.



8382383 0015410 948

### TRK Servo Gain Normal; fs = 88.2kHz

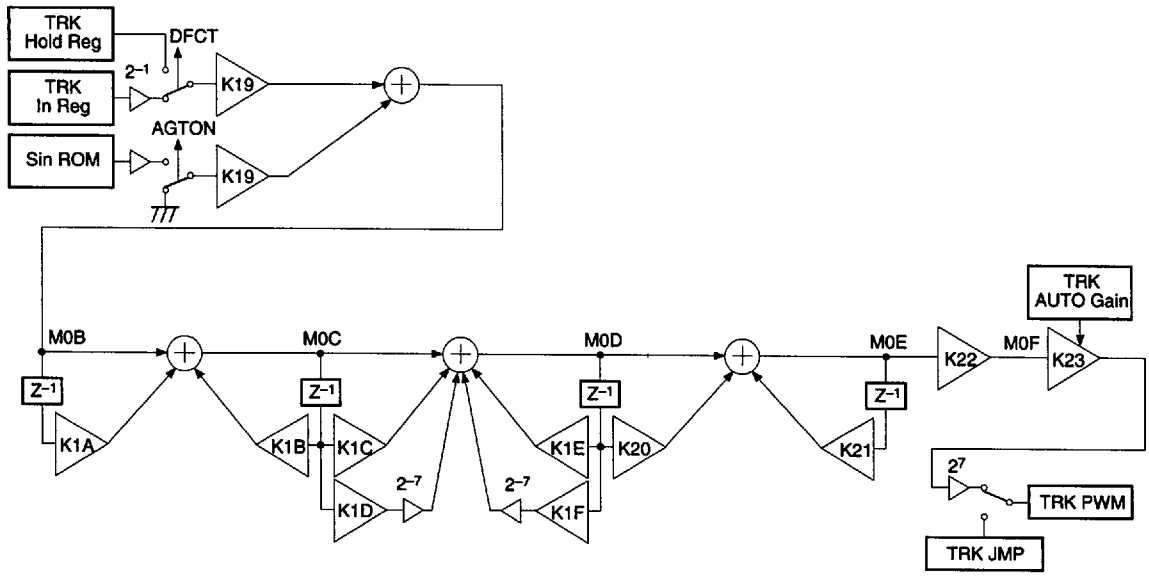


Note) Set the MSB bit of the K1D and K1F coefficients to 0.

### TRK Servo Gain Up 1; fs = 88.2kHz

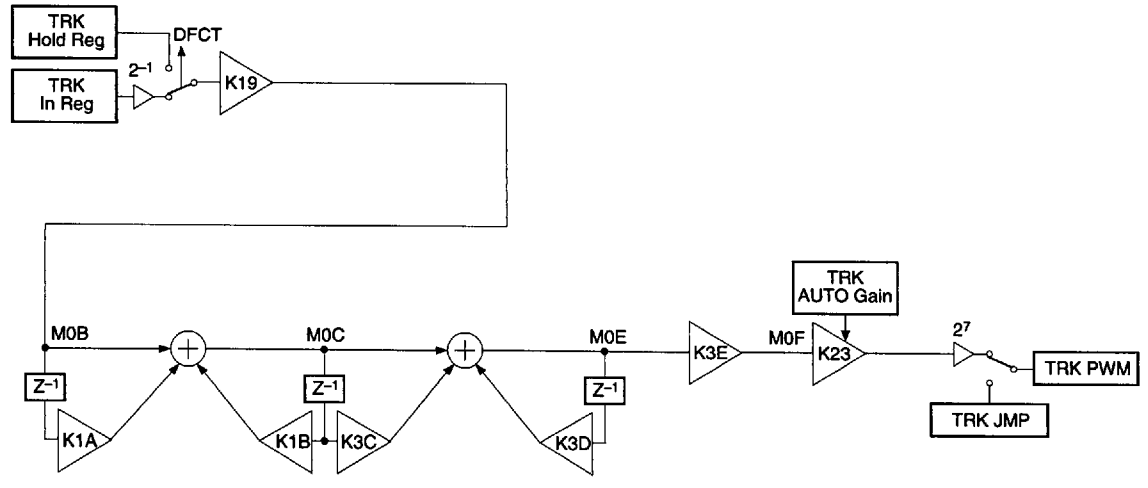




8382383 0015411 884

### TRK Servo Gain Up 2; fs = 88.2kHz

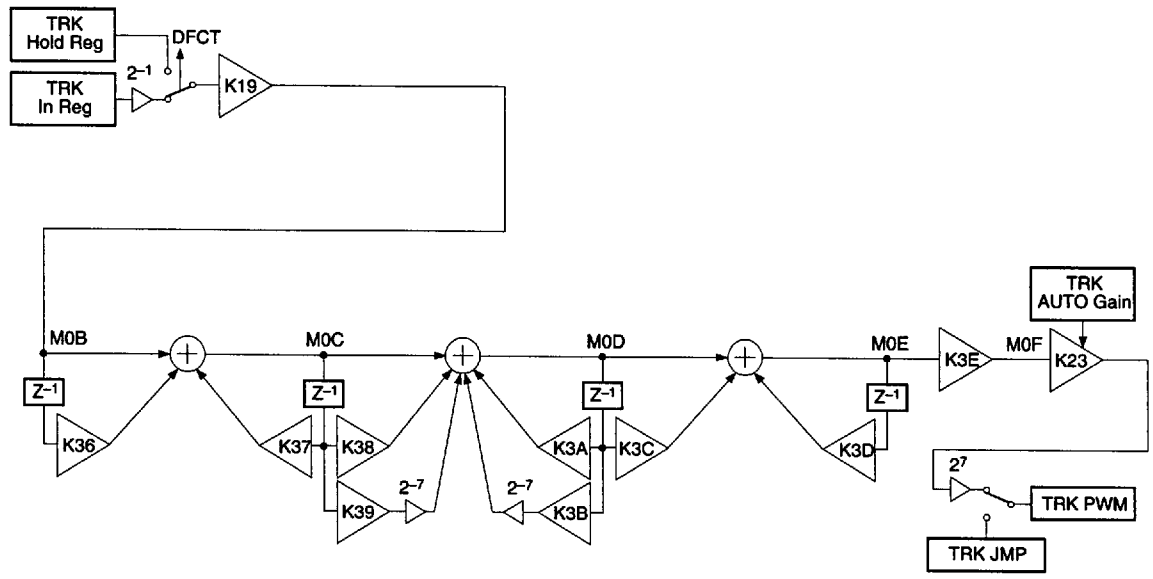


Note) Set the MSB bit of the K39 and K3B coefficients to 0.

### SLD Servo; fs = 345Hz

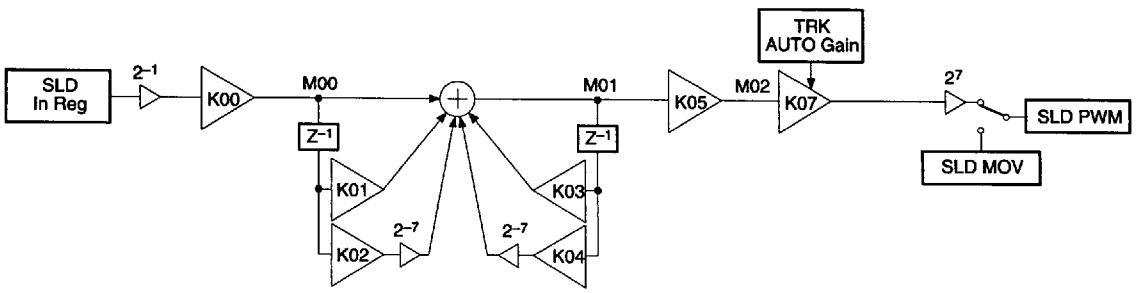


Note) Set the MSB bit of the K02 and K04 coefficients to 0.

### HPTZC/Auto Gain; fs = 88.2kHz

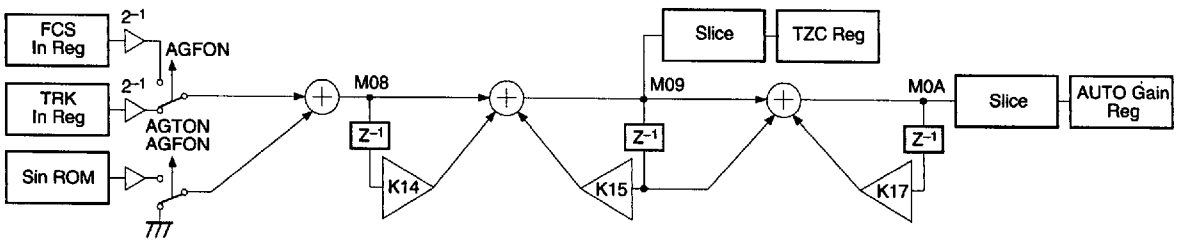




8382383 0015412 710

### Anti Shock; fs = 88.2kHz

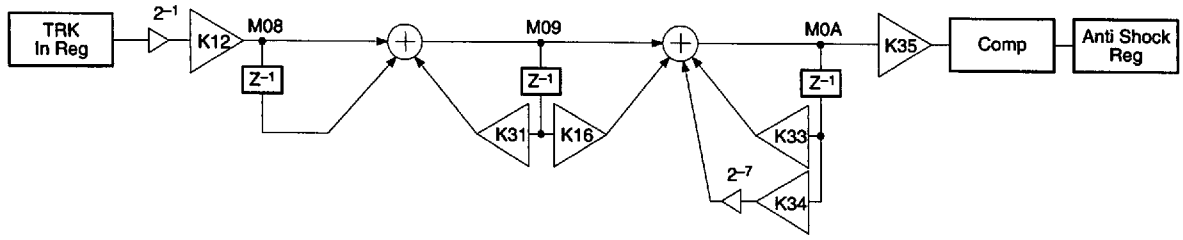


Note) Set the MSB bit of the K34 coefficient to 0.
The comparator level is 1/16 the maximum amplitude of the comparator input.

### AVRG; fs = 88.2kHz

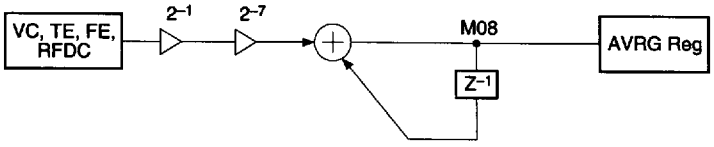


### TRK Hold; fs = 345Hz

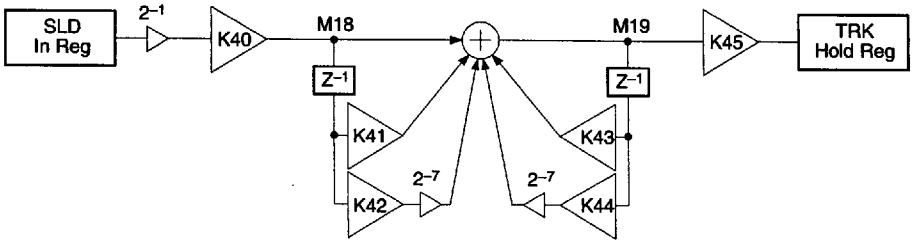


Note) Set the MSB bit of the K42 and K44 coefficients to 0.

### FCS Hold; fs = 345Hz

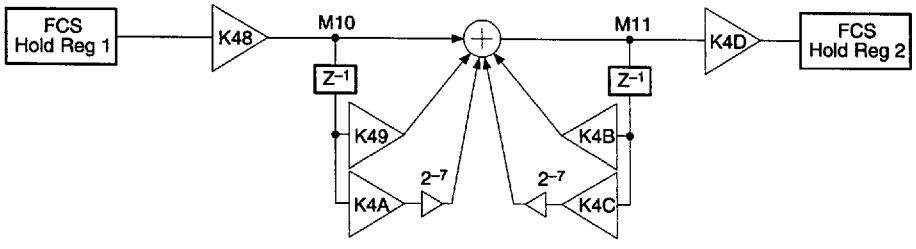


Note) Set the MSB bit of the K4A and K4C coefficients to 0.



8382383 0015413 657

## FCS Servo Gain Normal; fs = 88.2kHz, during quasi double accuracy (Ex.: $3EAXX0)

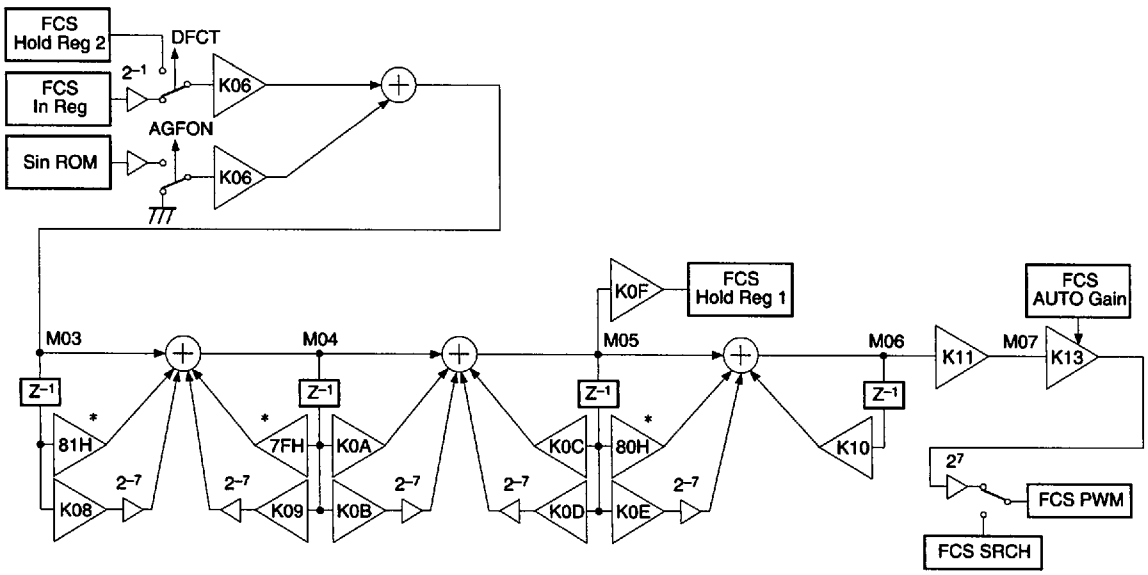


* 81H, 7FH and 80H are each Hex display 8-bit fixed values when set to quasi double accuracy.

Note) Set the MSB bit of the K0B and K0D coefficients during normal operation, and of the K08, K09 and K0E coefficients during quasi double accuracy to 0.

## FCS Servo Gain Down; fs = 88.2kHz, during quasi double accuracy (Ex.: $3E5XX0)

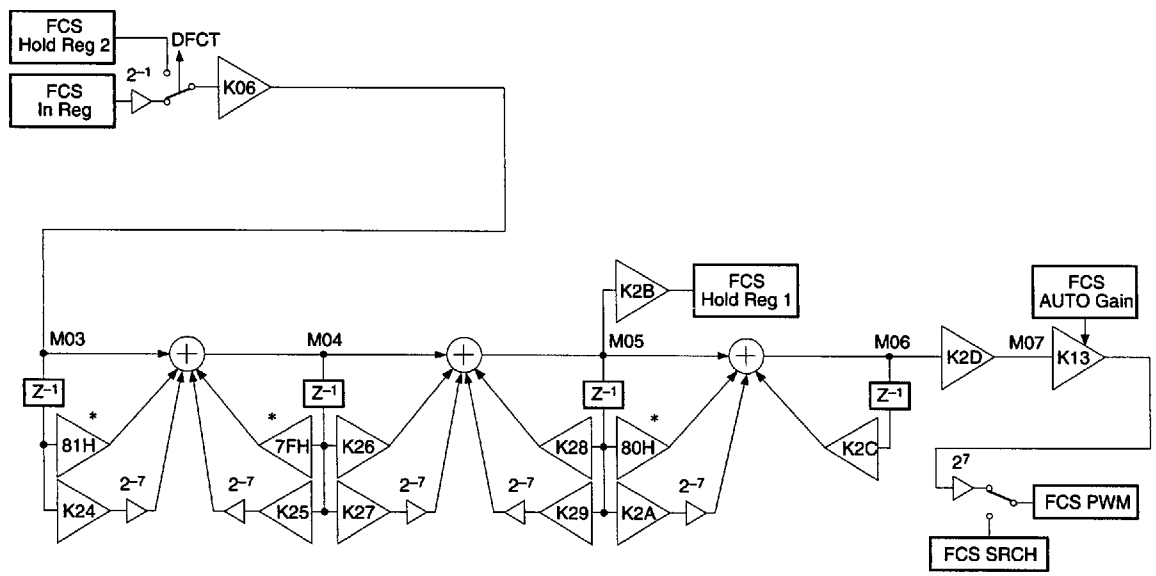


* 81H, 7FH and 80H are each Hex display 8-bit fixed values when set to quasi double accuracy.

Note) Set the MSB bit of the K27 and K29 coefficients during normal operation, and of the K24, K25 and K2A coefficients during quasi double accuracy to 0.



8382383 0015414 593

**TRK Servo Gain Normal; fs = 88.2kHz, during quasi double accuracy (Ex.: $3EXAX0)**

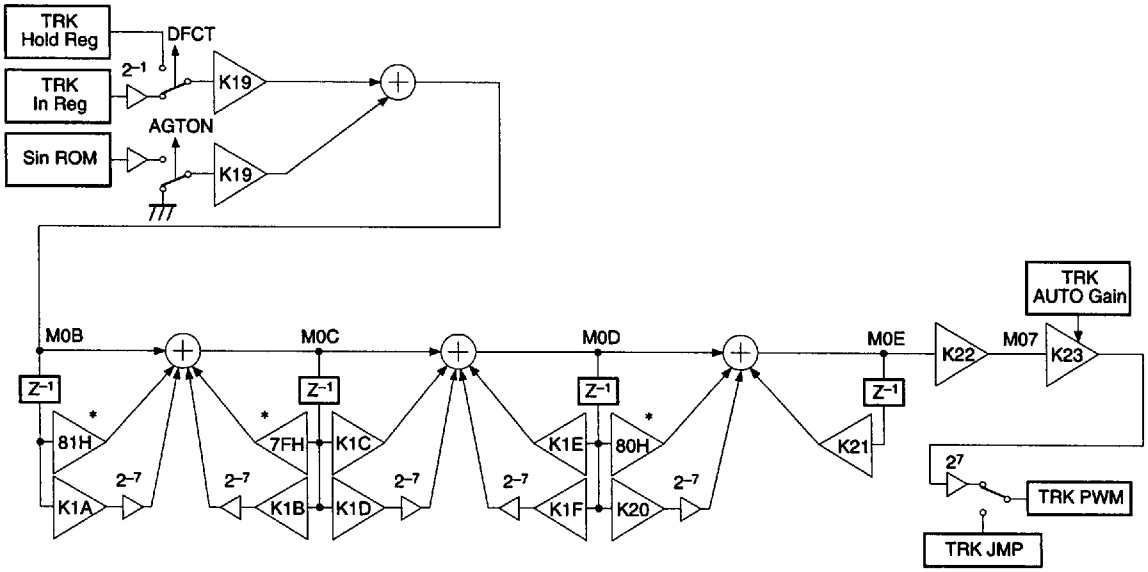


* 81H, 7FH and 80H are each Hex display 8-bit fixed values when set to quasi double accuracy.

Note) Set the MSB bit of the K1D and K1F coefficients during normal operation, and of the K1A, K1B and K20 coefficients during quasi double accuracy to 0.

**TRK Servo Gain up 1; fs = 88.2kHz, during quasi double accuracy (Ex.: $3EX5X0)**

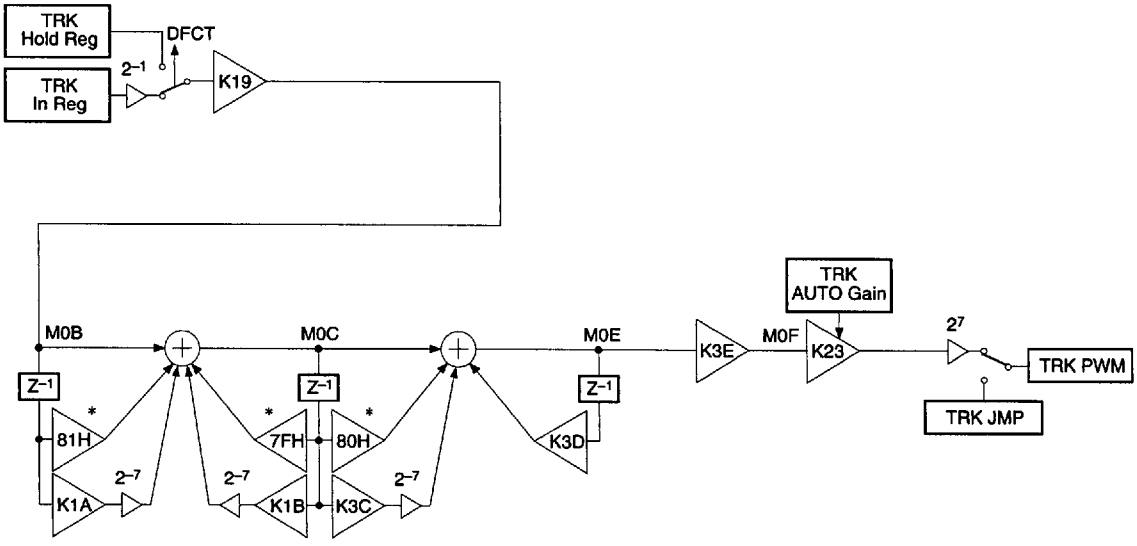


* 81H, 7FH and 80H are each Hex display 8-bit fixed values when set to quasi double accuracy.

Note) Set the MSB bit of the K1A, K1B and K3C coefficients during quasi double accuracy to 0.



8382383 0015415 42T

**TRK Servo Gain up 2; fs = 88.2kHz, during quasi double accuracy (Ex.: $3EX5X0)**

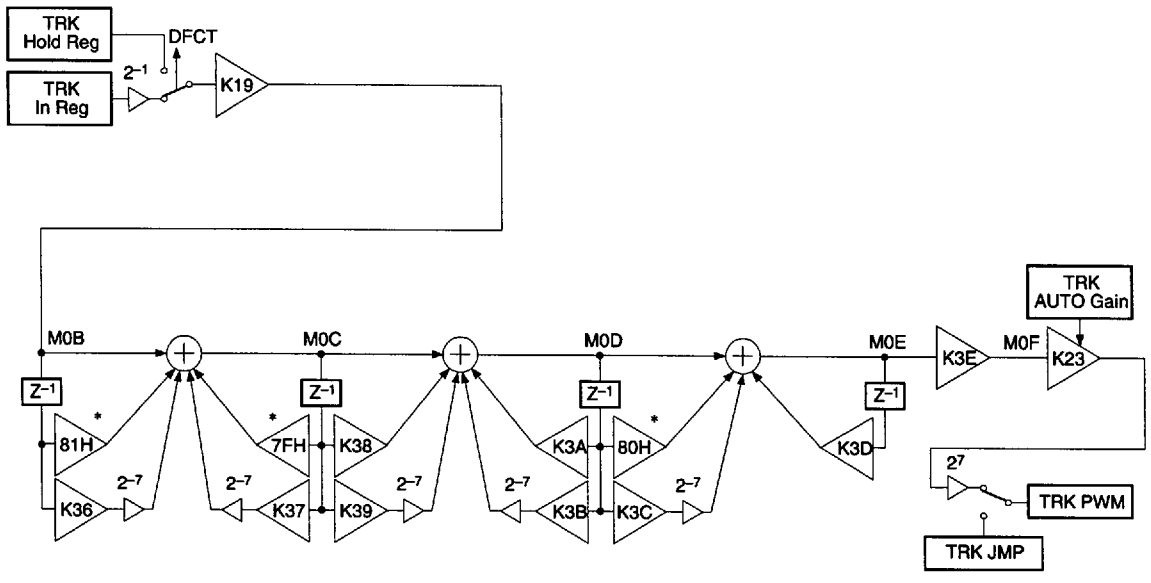


* 81H, 7FH and 80H are each Hex display 8-bit fixed values when set to quasi double accuracy.

Note) Set the MSB bit of the K39 and K3B coefficients during normal operation, and of the K36, K37 and K3C coefficients during quasi double accuracy to 0.



8382383 0015416 366

## §3-21. TRACKING and FOCUS Frequency Response

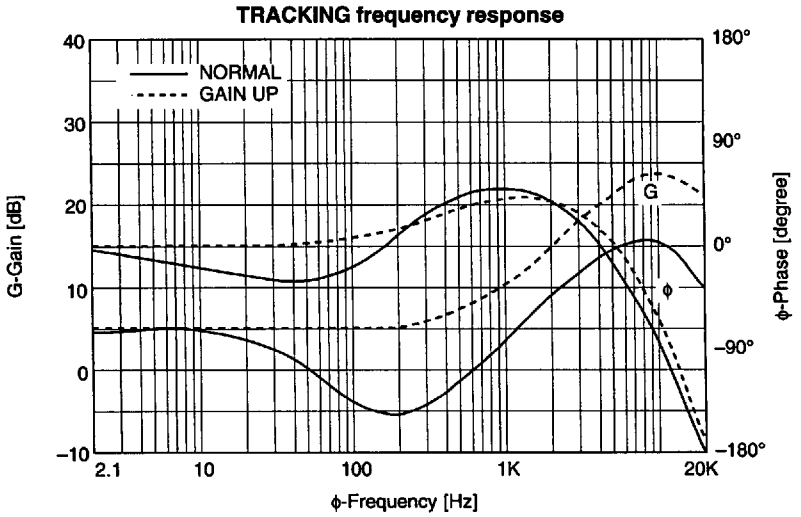


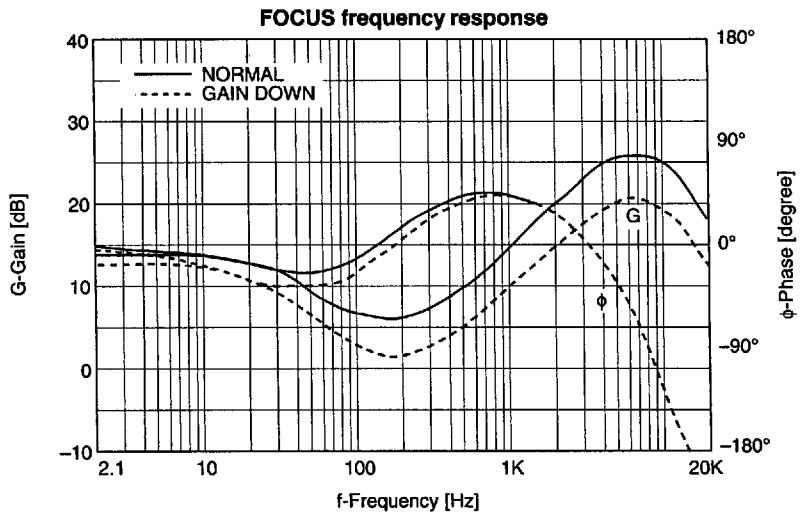




8382383 0015417 2T2

## [4] Application Circuit

### §4-1. Application Circuit

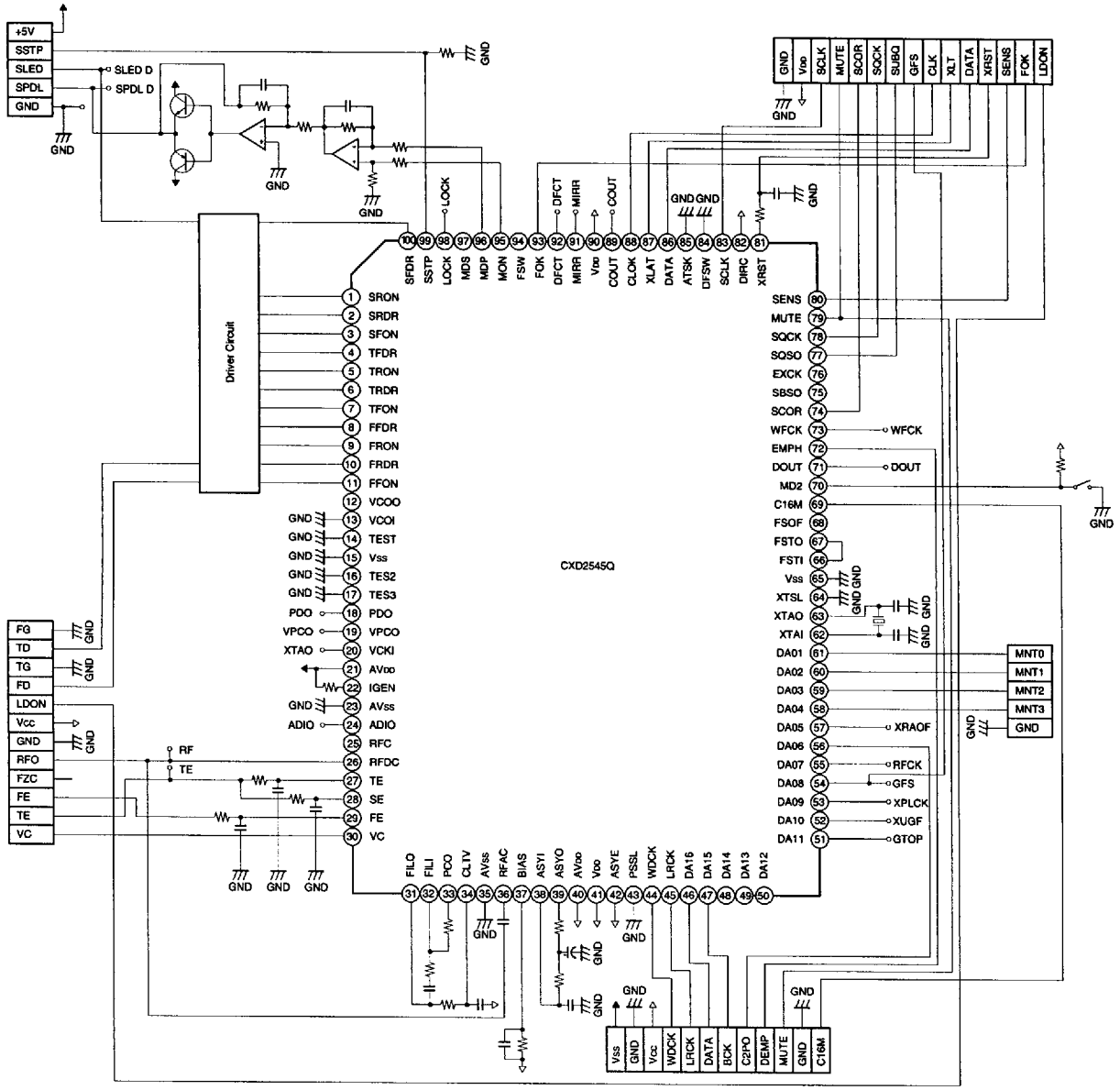


Application circuits shown are typical examples illustrating the operation of the devices. Sony cannot assume responsibility for any problems arising out of the use of these circuits or for any infringement of third party patent and other right due to same.



8382383 0015418 139

**Package Outline** Unit: mm

QFP-100P-L01

100PIN QFP (PLASTIC)

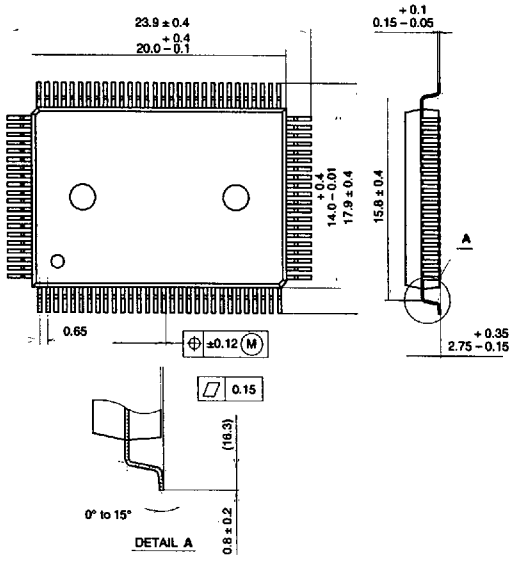


| | |
|---|---|
| SONY CODE | QFP-100P-L01 |
| EIAJ CODE | *QFP100-P-1420-A |
| JEDEC CODE | |

PACKAGE STRUCTURE

| | |
|---|---|
| PACKAGE MATERIAL | EPOXY RESIN |
| LEAD TREATMENT | SOLDER PLATING |
| LEAD MATERIAL | COPPER / 42 ALLOY |
| PACKAGE WEIGHT | 1.4g |

QFP-100P-L121

100PIN QFP (PLASTIC)

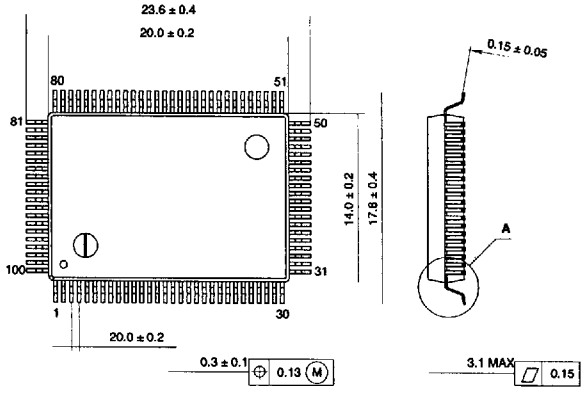


| | |
|---|---|
| SONY CODE | QFP-100P-L121 |
| EIAJ CODE | *QFP100-P-1420-AX |
| JEDEC CODE | |

PACKAGE STRUCTURE

| | |
|---|---|
| PACKAGE MATERIAL | EPOXY RESIN |
| LEAD TREATMENT | SOLDER PLATING |
| LEAD MATERIAL | 42 ALLOY |
| PACKAGE WEIGHT | 1.7g |



8382383 0015419 075

This datasheet has been downloaded from:

www.DatasheetCatalog.com

Datasheets for electronic components.