BEO 53 040423-02 REV A



1 – 3 PLAYERS

There is a new underground sport in the city! Fight your way to the end and dethrone the reigning champion, the MASKED WARRIOR!

HOW TO PLAY:

Select one of 3 fighters.
Each has a different fighting technique and SUPER MOVE.

For SUPER MOVE, push all 3 buttons at same time.

Buzz: Killer Body Slam

Ty: Flying Deadly Double Kick

Kato: Lethal Dragon Punch

To pick up enemy, object or weapon:
★ Stand close, press Punch and Kick at same time.

To throw enemy, object or weapon:
★ After picking up press Punch.

To duck:
★ Pull joystick down, press and hold DEFEND (Jump and Punch).

For Dual Side Attack (when between two fighters):
★ Press DEFEND (Jump and Punch).

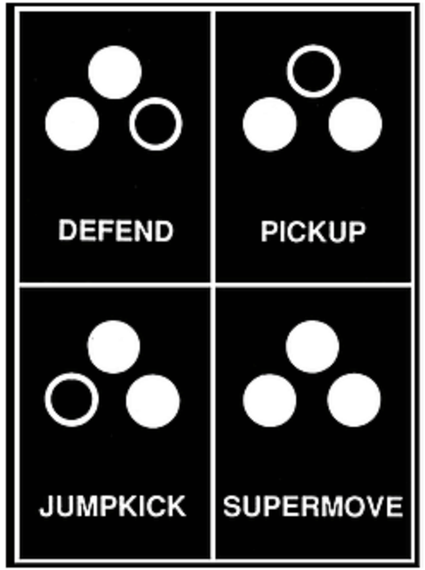

HINTS:

★ Tap joystick or any button to get up fast!
★ Double-tap joystick for EVADE move. Combine with SUPER MOVE for effective sneak attack.
★ Beware of the hostile crowd!
★ Try other control combinations for more "special" moves.

Add coins to continue
Join in at anytime!

Buzz: Former pro wrestler & bodybuilder. Specializes in brute strength moves

Ty: Champion kickboxer & Pit-Fight veteran. Powerful kicks & killer instinct

Kato: Master of Flying Dragon style of Karate. Incredible hand speed and agility

BEO539 **048425** -02-REV.A

TM-357
1st printing

ATARI®
GAMES

Operator's Manual

with Schematics

PIT-FIGHTER

ATARI
GAMES

PIT-FIGHTER™

Operator's Manual

with Schematics



Copyright © 1990 by Atari Games Corporation. All rights reserved.

No part of this publication may be reproduced by any mechanical, photographic or electronic process, or in the form of a phonographic recording, nor may it be stored in a retrieval system, transmitted, or otherwise copied for public or private use, without permission from the publisher.

The game play, all graphic designs, this technical manual, its accompanying schematic diagrams, and the display manual are protected by the U.S. Copyright Act of 1976.

This Act provides for substantial penalties for violating federal copyright laws. Courts can impound infringing articles while legal action is pending. If infringers are convicted, courts can order destruction of the infringing articles.

In addition, the Act provides for payment of statutory damages of up to $50,000 per infringing transaction in certain cases. Infringers may also have to pay costs and attorneys' fees and face an imprisonment of up to five years as well as fines of up to $250,000 in the case of individuals and up to $500,000 in the case of corporations.

Atari Games Corporation will aggressively enforce its copyrights against infringers. We will use all legal means to immediately halt any manufacture, distribution, or operation of a copy of video games made by us. Anyone who purchases such copies risks forfeiting such a game.

Published by:
Atari Games Corporation
675 Sycamore Drive
Milpitas, California 95036-1110

Printed in the U.S.A **8/90**

Produced by the Atari Games Technical Publications Department.

Technical Writing & Editing:
Andrea Dencker
Illustration & Design:
Mary Ohanessian
Sumner

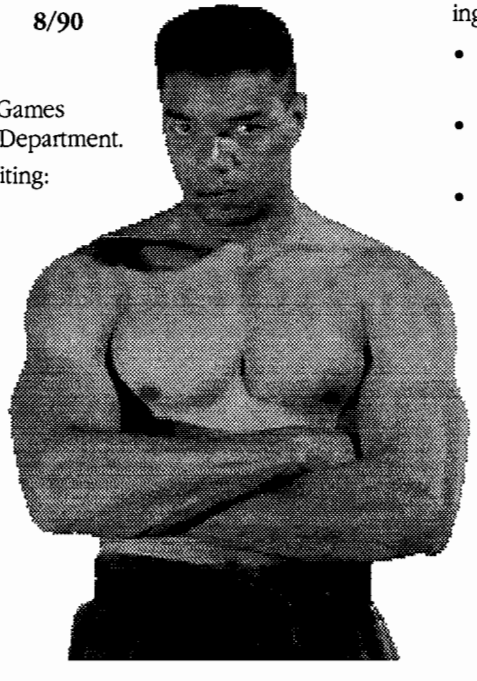

Notice Regarding Non-Atari® Parts

WARNING

Use of non-Atari parts or modifications of any Atari game circuitry may adversely affect the safety of your game, and may cause injury to you and your players.

You may void the game warranty (printed on the inside back cover of this manual) if you do any of the following:

- Substitute non-Atari parts in the game.
- Modify or alter any circuits in the game by using kits or parts *not* supplied by Atari Games Corporation.

NOTE

This equipment generates, uses, and can radiate radio frequency energy, and if not installed and used in accordance with the instruction manual, may cause interference to radio communications. It has been tested and found to comply with the limits for a Class A computing device pursuant to Subpart J of Part 15 of Federal Communications Commission (FCC) Rules, which are designed to provide reasonable protection against such interference when operated in a commercial environment. Operation of this equipment in a residential area or modification to this equipment is likely to cause interference, in which case the user, at his own expense, will be required to take whatever measures may be required to correct the interference. If you suspect interference from an Atari game at your location, check the following:

- All ground wires in the game are properly connected as shown in the game wiring diagram.
- The power cord is properly plugged into a grounded three-wire outlet.
- On games provided with an Electromagnetic Interference (EMI) ground cage, be sure that the game printed-circuit boards (PCBs) are properly installed on the EMI ground cage and that the end board is securely installed with **all** screws in place and tightened.

If you are still unable to solve the interference problem, please contact Customer Service at Atari Games Corporation. See the inside front cover of this manual for service in your area.

Contents

1 Set-Up

How to Use This Manual 1-1
Inspecting the Game 1-2
Control and Switch Locations 1-2
Installing the Control Panel 1-2
Setting the Coin and Game Options 1-3
Game Play 1-3

2 Self-Test

Entering and Exiting the Self-Test 2-2
RAM and ROM Test 2-2
Select Test Menu 2-2
Switch Test 2-3
Sound Test 2-3
Coin Options 2-3
Game Options 2-3
Game Statistics 2-4
Alphanumeric Test 2-5
Motion Object Test 2-6
Playfield Test 2-6
Color Test 2-6
Convergence Test 2-7

3 Maintenance and Troubleshooting

Maintaining the Coin Mechanism 3-3
Repairing the Video Display 3-3
Repairing and Replacing the Joystick Control 3-4
ROMs and RAMs 3-4

4 Parts Illustrations

See the list of illustrations that follows.

5 Schematics

See the list of illustrations that follows.

Pit-Fighter Statistics Sheet

Warranty

Illustrations

Figure 1-1 Control and Switch Locations 1-3

Figure 2-1 Select Test Menu Screen 2-2
2-2 Switch Test Screen 2-3
2-3 Sound Test Screen 2-3
2-4 Coin Options Screen 2-3
2-5 Game Options Screen 2-4
2-6 Statistics Screen 2-5
2-7 Alphanumeric Test Screen 2-6
2-8 Motion Object Test Screen 2-6
2-9 Playfield Test Screen 2-6
2-10 Color Test Screen 2-6
2-11 Convergence Test Screen 2-7

Figure 3-1 Maintaining the Joystick Assembly 3-5

Figure 4-1 Cabinet-Mounted Assemblies 4-2
4-2 Joystick Assembly 4-4
4-3 Coin Controls, Inc. Coin Door Assembly 4-6
4-4 Power Supply Assembly 4-9
4-5 Pit-Fighter Game PCB Assembly 4-10
4-6 JSA Audio II PCB Assembly 4-14

Figure 5-1 Pit-Fighter Game PCB Assembly Schematic Diagram 5-2
5-2 JSA Audio II PCB Assembly Schematic Diagram 5-8
5-3 Game Wiring Diagram 5-10

Tables

Table 1-1 Game Specifications 1-2

Table 2-1 Summary of the Self-Test Screens 2-2
2-2 Bad RAM Location by Error Address 2-2
2-3 Bad ROM Location by Error Address 2-2
2-4 Coin Option Settings 2-4
2-5 Game Option Settings 2-5

Table 3-1 Troubleshooting Table 3-2
3-2 Voltage Inputs and Test Points on the PCBs 3-3
3-3 What ROM Problems Look Like 3-4
3-4 Screen Colors Indicating Bad RAMS 3-4

Safety Summary

The following safety precautions apply to all game operators and service personnel. Specific warnings and cautions will be found in this manual whenever they apply.

WARNING

Properly Ground the Game. Players may receive an electrical shock if this game is not properly grounded! To avoid electrical shock, do not plug in the game until it has been inspected and properly grounded. This game should only be plugged into a grounded three-wire outlet. If you have only a two-wire outlet, we recommend you hire a licensed electrician to install a three-wire grounded outlet. If the control panel is not properly grounded, players may receive an electrical shock! After servicing any part on the control panel, check that the grounding wire is firmly secured to the inside of the control panel. After you have checked this, lock up the game.

AC Power Connection. Before you plug in the game, be sure that the game's power supply can accept the AC line voltage in your location. The line voltage requirements are listed in the first chapter of this manual.

Disconnect Power During Repairs. To avoid electrical shock, disconnect the game from the AC power before removing or repairing any part of the game. If you remove or repair the video display, be very careful to avoid electrical shock. High voltages continue to exist even after power is disconnected in the display circuitry and the cathode-ray tube (CRT). Do not touch the internal parts of the display with your hands or with metal objects! Always discharge the high voltage from the CRT before servicing it. Do this after you disconnect it from the power source. First, attach one end of a large, well-insulated, 18-gauge jumper wire to ground. Then momentarily touch the free end of the grounded jumper wire to the CRT anode by sliding the wire under the anode cap. Wait two minutes and do this again.

Use Only Atari Parts. To maintain the safety of your Atari game, use only Atari parts when you repair it. Using non-Atari parts or modifying the game circuitry may be dangerous, and could injure you and your players.

Handle the CRT With Care. If you drop the CRT and it breaks, it may implode! Shattered glass from the implosion can fly six feet or more.

Use the Proper Fuses. To avoid electrical shock, use replacement fuses which are specified in the parts list for this game. Replacement fuses must match those replaced in fuse type, voltage rating, and current rating. In addition, the fuse cover must be in place during game operation.

CAUTION

Properly Attach All Connectors. Make sure that the connectors on each printed circuit board (PCB) are properly plugged in. The connectors are keyed to fit only one way. If they do not slip on easily, do not force them. If you reverse a connector, it may damage your game and void your warranty.

Ensure the Proper AC Line Frequency. Video games manufactured for operation on 60 Hz line power (used in the United States) must not be operated in countries with 50 Hz line power (used in Europe).

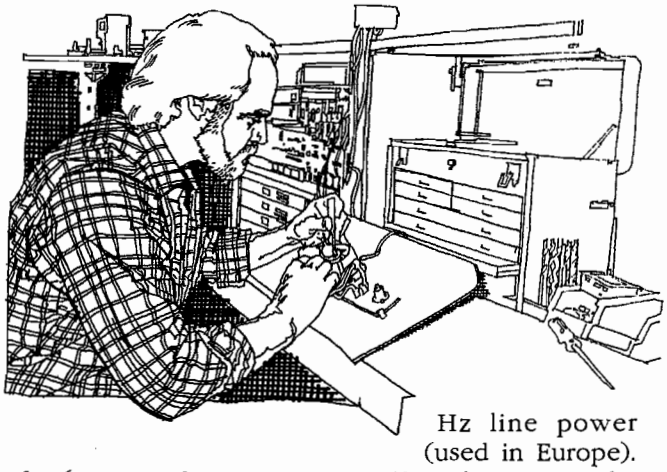

If a 60 Hz machine operates on 50 Hz line power, the fluorescent line ballast transformer will overheat and cause a potential fire hazard. Check the product identification label on your machine for the line frequency required.

ABOUT NOTES, CAUTIONS, AND WARNINGS

In Atari publications, notes, cautions and warnings have the following meaning:

NOTE — A highlighted piece of information.

CAUTION — Equipment and/or parts can be damaged or destroyed if instructions are not followed. You will void the warranty on Atari printed-circuit boards, parts thereon, and video displays if equipment or parts are damaged or destroyed due to failure of following instructions.

WARNING — Players and/or technicians can be killed or injured if instructions are not followed.

CHAPTER 1

Set-Up

How to Use This Manual

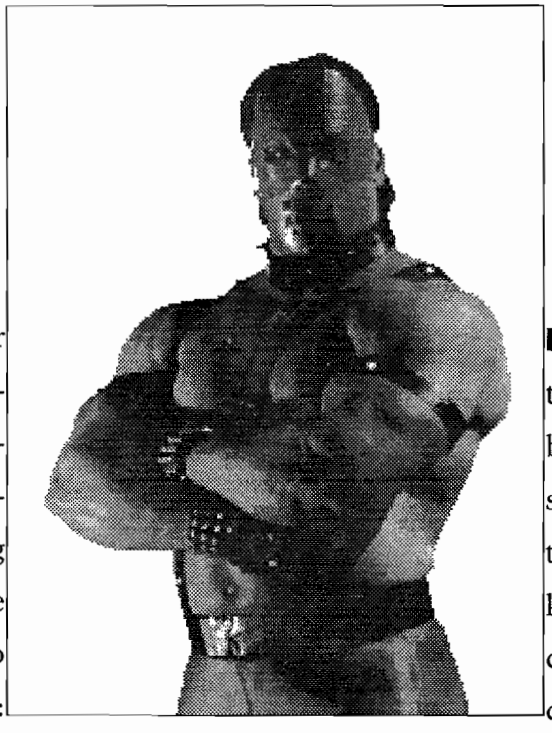

This manual is written for operators and service personnel. It provides information for setting up, playing, testing, and maintaining your Pit-Fighter™ game. The manual is divided into the following chapters: ■ Chapter 1 contains set-up and game playing information. ■ Chapter 2 describes the self-test and how to use the self-test screens. ■ Chapter 3 contains maintenance, repair, and troubleshooting procedures. Be sure to perform the preventive maintenance tasks to keep the game in good condition. ■ Chapter 4 contains the illustrated parts lists. ■ Chapter 5 contains the schematics for the Pit-Fighter game PCB and JSA Audio II PCB and the game wiring diagram.

Inspecting the Game

WARNING

To avoid electrically shocking yourself and damaging the game electronics, do not plug in the game until it has been inspected and set up for your line voltage.

This cabinet should be connected to a grounded three-wire outlet only. If you have only two-wire outlets, we recommend that you hire a licensed electrician to install grounded outlets. Players can receive an electrical shock if the cabinet is not properly grounded.

Inspect your Pit-Fighter game carefully to ensure that the game is complete and was delivered to you in good condition.

Inspect the cabinet as follows:

1. Examine the exterior of the cabinet for dents, chips, or broken parts.
2. Open the service door. Unlock and open the coin doors. Inspect the interior of the cabinet as follows:
   a. Check that all plug-in connectors on the cabinet harnesses are firmly plugged in. Do not force connectors together. The connectors are keyed so they fit only in the proper orientation. A reversed connector can damage a printed-circuit board (PCB). This will void your warranty.
   b. Ensure that all plug-in integrated circuits on each PCB are firmly plugged into their sockets.
   c. Inspect the power cord for any cuts or dents in the insulation.
   d. Inspect the power supply. Make sure that the correct fuses are installed. Check that the harness is plugged in correctly and that the fuse block cover is mounted in place. Check that the green ground wire are connected.

Table 1-1 Game Specifications

Characteristic	Specification
Power Consumption	127 W maximum
Line Fuse Rating	2 Amps
Line Voltage	102 to 132 VAC
Temperature	5° to 38° C (37° to 100° F)
Humidity	Not to exceed 95% relative
Width	33.25 inches (84 cm)
Depth	38.25 inches (97 cm)
Height	71.75 inches (182 cm)
Weight	325 lbs. (148 kg)

   e. Inspect other sub-assemblies, such as the video display, controls, printed-circuit boards (PCBs), and speakers. Make sure that they are mounted securely and that the ground wires are connected.

Control and Switch Locations

Most of the controls are located inside the drawer, behind the control panel (see Figure 1-1). The only exception is the power on/off switch.

Power On/Off Switch

The power on/off switch is located at the top left of the cabinet (behind the peak).

Volume Control

The volume control is located on the JSA Audio II PCB, which is in the drawer behind the control panel.

Self-Test Switch

The self-test switch is also located on the JSA Audio II PCB, in the drawer behind the control panel.

Coin Counter

The coin counter is located on the bottom of the coin box, inside the lower coin door.

Installing the Control Panel

Make sure the game power is turned off. To install the separately packaged control panel, you need the following tools:

- Hex driver or wrench
- Four flat washers (provided with game)
- Four nut-washer assemblies (provided with game)

1. Reach in through the openings on the front of the drawer, and open the spring draw latch on each side. Pull the drawer out partly. (See Figure 1-1.)
2. Hold the control panel up to the front of the drawer, and match up the four threaded studs with the four small holes (one in each corner).
3. Install one flat washer and nut/washer assembly onto each threaded stud.
4. Plug the two control panel harness connectors into the game harness inside the drawer. These connectors are interchangeable, so be sure to match wire colors. Plug the third harness connector into the game PCB connector located near capacitors C42–C44. Attach the ground clip to the power supply base. **This step is very important, since this clip grounds the control panel.**
5. Close the drawer and snap shut both latches.

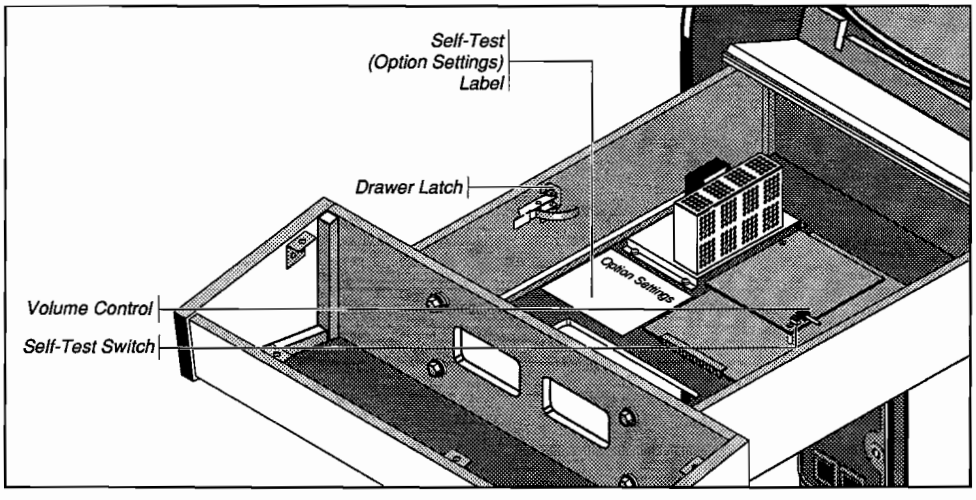

Figure 1-1 Control and Switch Locations

6. Turn on the game power. Check that the video display and the attraction lamp have power.

Setting the Coin and Game Options

The Pit-Fighter coin and game options are set in the self-test. Refer to Chapter 2 for the recommended settings and the procedure for setting the options.

Game Play

This section of the manual describes the theme of the Pit-Fighter game and the game play features.

Introduction

This is Pit-Fighter, the new underground sport! There's no shortage of action in this no-holds-barred street fight. Players control one of three skilled masters as they challenge street-tough fighters like "The Executioner", "Chainman Eddie", "Angel", and the "Masked Warrior"—the Ultimate Champion.

Pit-Fighter is made entirely of *digitally processed graphics* for the ultimate in realism. It even includes a camera zoom and side-to-side pan for a cinematic look.

Up to three can play, and players can join in at any time. Each player uses an 8-way joystick and three buttons to control his fighter. Using different button combinations, players command their fighters to punch, kick and jump. Using other control combinations generates a variety of other moves.

The total number of fighters on the screen at any one time is determined by the number of paying players. In this free-for-all brawl, players can hit any fighter, even any of the good guys.

Play Mode

In Pit-Fighter, no rules exist. In this crude, unregulated form of prize fighting, anything goes. Fighters are in it for the money and glory of beating the champion.

Players begin by selecting one of three characters. Each are unique in appearance and fighting style.

Buzz — Former pro wrestler & bodybuilder. He specializes in brute-strength moves.

Ty — Champion kickboxer & Pit-Fight veteran. He has powerful kicks & killer instinct.

Kato — Master of the Flying Dragon style of Karate. He has incredible hand speed and agility.

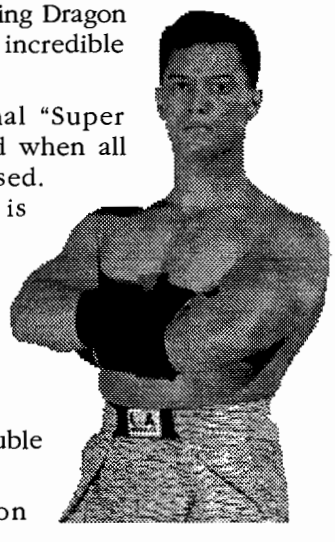

Each player has a lethal "Super Move" that is unleashed when all three buttons are pressed. This explosive move is much more damaging to a fighter than regular moves. Their special Super Moves are:

Buzz — Killer Body Slam

Ty — Flying Deadly Double Kick

Kato — Lethal Dragon Punch

In Pit-Fighter, players fight numerous challengers as they battle their way to the top. To keep players on

their toes, all the challengers have unique fighting skills and attack in a different way. Players must also be aware of a hostile crowd that will push and shove when fighters come too close. Some people will emerge from the crowd and stab fighters with knives. At the end of each match, players are awarded bonuses for Knockouts, Brutality, and a Fight Purse.

Every third match is a Grudge Match. Here, players fight head-to-head with other paying players in a multi-player game, or a computer twin of themselves in a one-player game. The winner is the last man standing in a three-knockdown fight. The last Grudge Match is an Elimination Match to decide who will challenge the Masked Warrior, the Ultimate Champion. After defeating the champion, a new one is crowned.

CHAPTER 2

Self-Test



Use the Pit-Fighter self-test to check the condition of the game circuitry and controls. You will see the self-test information on the video display and hear the sound test information through the speakers. You do not need any additional equipment to perform the self-test. Perform the self-test when you first set up the game, each time you collect the money, or when you suspect game problems. This chapter shows the screens in the self-test and explains each of the tests. The screens and explanations are arranged in the order they appear in the self-test. Table 2-1 lists all the self-test screens.

Entering and Exiting the Self-Test

To enter the self-test, turn on the self-test switch on the JSA Audio II PCB (next to the volume control). Doing so displays the select test menu (entitled "Self Test"); see Figure 2-1. Exit the self-test by turning off the self-test switch at any time.

Table 2-1 Summary of the Self-Test Screens

Self Test (Select Test Menu)
Switch Test
Sound Test
Coin Options
Game Options
Game Statistics
Alpha(numeric) Test
Motion Object Test
Playfield Test
Color Test
First Color Test
Second Color Test
Red Color Purity
Green Color Purity
Blue Color Purity
White Color Purity
Grey Color Purity
Convergence Test
White Convergence
Violet Convergence
Blue Convergence
Yellow Convergence

Table 2-2 Bad RAM Location by Error Address

Error Address	RAM Location High	RAM Location Low
FE8000 (Color RAM)	45D	45C
FF0000 (Video RAM)	35J	25J

Table 2-3 Bad ROM Location by Error Address

Error Address	ROM Location High	ROM Location Low
000000	5D	5B
020000	30D	30B

RAM and ROM Test

When you turn on the power, the game automatically runs through the random-access memory (RAM) and read-only memory (ROM) test. This test is *not* part of the self-test procedure. Regardless of whether or not the game has a problem, it will always advance to the attract mode. The game will stop only if you power it up and the self-test switch has been previously turned on.

Game RAM Test

No message appears while the test is checking the RAMs. If more than 30 seconds elapse and the self-test menu doesn't appear, the game has a problem. See Table 2-2 for the locations of bad RAMs. If the test finds no RAM errors, no message appears and the program goes to the ROM test after 15-20 seconds.

Game ROM Test

If the test finds no ROM errors, no message appears and the program goes to the title screen in the attract mode. If a ROM fails, a message is displayed. Furthermore, if the failed ROM is a program ROM, then the error number with checksums is shown in the center of the screen. The ROM error test takes a few seconds. See Table 2-3 for the location of bad ROMs.

If you think you have a ROM error, but the screen shows no messages, see Table 3-3 for information about the locations of various ROM functions.

Depending on how bad the ROM error is, you may not be able to enter the self-test.

Select Test Menu

Choose which test or screen you want to see from this menu, shown in Figure 2-1. Move up and down the menu using any of the three joysticks. Start the select-

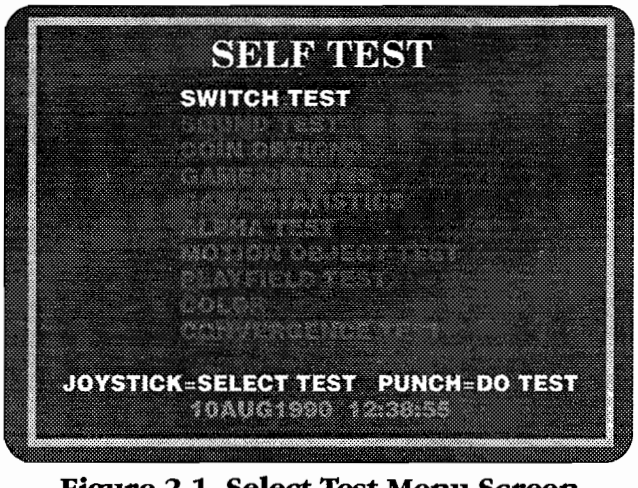

Figure 2-1 Select Test Menu Screen

ed test by pressing any of the punch buttons.

Switch Test

The switch test screen is shown in Figure 2-2. Test the joysticks and pushbutton switches. As you use each control, the pink *X*s for the pushbuttons change to *0*s, or the joystick switch markers (small yellow dots) are highlighted. If the changes do not appear on the screen, check the switch wiring and the switches.

NOTE

The coin mechanisms are checked in the Sound test. See the next section below.

Press the left Kick and Punch buttons simultaneously to return to the menu screen.

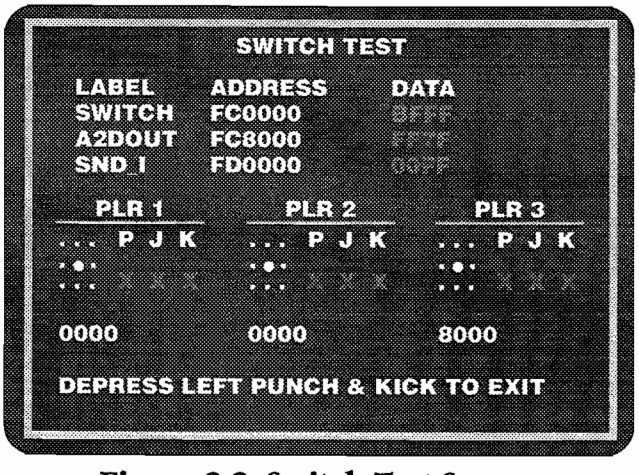

Figure 2-2 Switch Test Screen

Sound Test

The sound test indicates the condition of the sound effects circuit on the game PCB. The sound test screen appears in Figure 2-3.

Use one of the joysticks to select from the sounds; press one of the jump buttons to listen to it. (You can have numerous sounds playing simultaneously, or you can have silence, depending on which ones you select.) Pressing any punch button returns you to the menu screen.

Coin Options

Check and select the coin options on this screen, shown in Figure 2-4. The screen shows the factory default settings in green.

To move through the options, to change or save the settings, or to return to the select test menu, follow the instructions shown at the bottom of the screen. The coin option settings, with defaults, are shown and explained in Table 2-4.

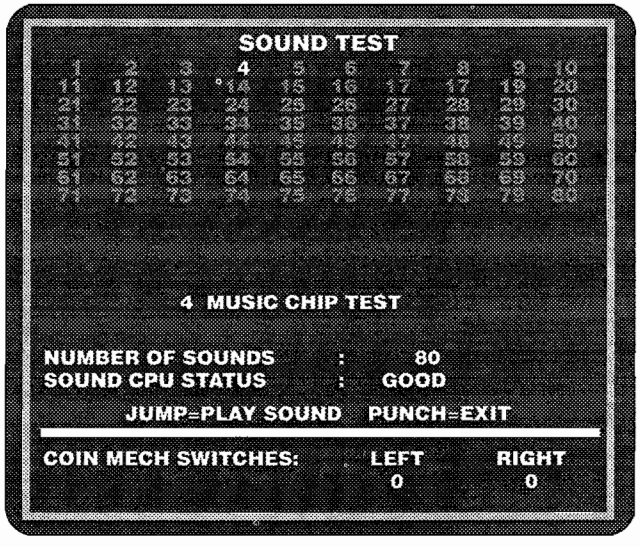

Figure 2-3 Sound Test Screen

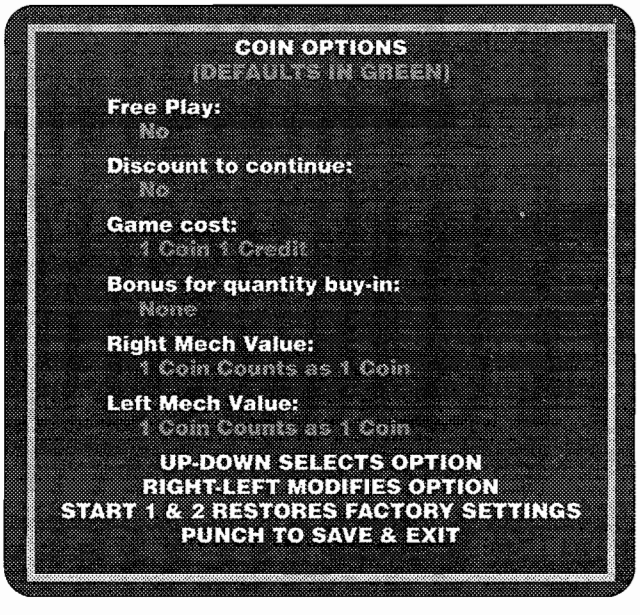

Figure 2-4 Coin Options Screen

Game Options

Check and select the game options on this screen, shown in Figure 2-5. The screen shows the factory default settings in green.

To move through the options, to change or save the settings, or to return to the select test menu, follow the instructions shown at the bottom of the screen. The

Table 2-4 Coin Option Settings

Option	Available Settings	Explanation
Free Play	No ✦ Yes	Lets you choose free play to demonstrate the game.
Discount to Continue	No ✦ Yes	If set to *Yes*, this option reduces by 50% the player's cost to continue a game (always rounded up to the next full coin).
Game Cost	1 coin 1 credit ✦ 2 coins 1 credit ... 8 coins 1 credit	The number of coins required for one credit.
Bonus for Quantity Buy-in	None ✦ 2 coins give 1 3 coins give 1 3 coins give 2 4 coins give 1 ... 9 coins give 2 9 coins give 3	Lets you choose from various kinds of bonuses or no bonus.
Right Mech Value	1 coin counts as 1 coin ✦ 1 coin counts as 2 coins ... 1 coin counts as 7 coins 1 coin counts as 8 coins	The number of coins each coin counts as in the right coin mechanism.
Left Mech Value	1 coin counts as 1 coin ✦ 1 coin counts as 2 coins ... 1 coin counts as 7 coins 1 coin counts as 8 coins	The number of coins each coin counts as in the left coin mechanism.

✦ *Manufacturer's recommended settings*

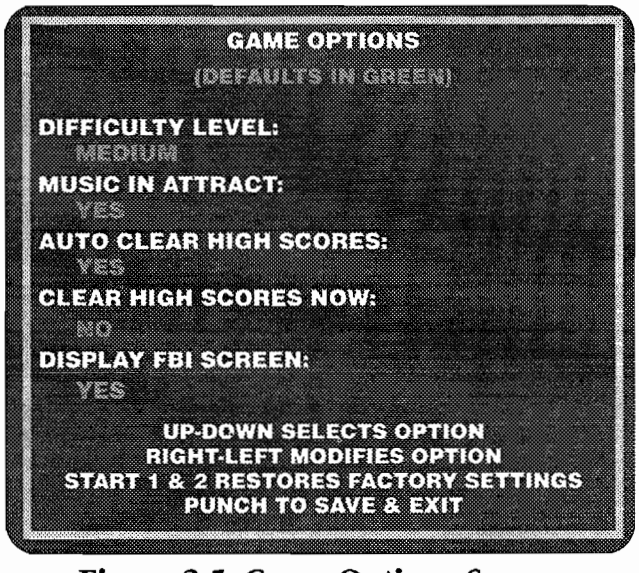

Figure 2-5 Game Options Screen

game options, with defaults, are shown and explained in Table 2-5.

Game Statistics

Use the information shown in the four statistics and histogram (bar graph) screens to keep track of your game use and maximize your profits. Record the information on the Pit-Fighter statistics page in the back of this manual. The first of the four screens is shown in Figure 2-6.

The game statistics are collected from the last time the statistics were cleared. You can clear the statistics by simultaneously pressing the Start 1 and 2 buttons (the left and center ones). Press the left Punch button to advance to the next statistics or histogram screen, or to go back to the Select Test menu.

Statistics Screen

The first statistics screen lists the following information:

- *Left Coins* shows the number of coins counted in the left coin mechanism.
- *Right Coins* shows the number of coins counted in the right coin mechanism.
- *0 Plyr Mins* shows the number of minutes that the game was idle.
- *1 Plyr Mins* shows the number of minutes that the

Table 2-5 Game Option Settings

Option	Available Settings		Explanation
Difficulty Level	Easiest, Way Easy, Very Easy, Medium Easy, Medium ✦, Medium Hard, Very Hard, Hardest		Sets the game difficulty.
Music in Attract (Mode)	Yes ✦	No	Lets you turn the sound on or off in the attract mode.
Auto Clear High Scores	Yes ✦	No	Automatically clears the high-score table periodically.
Clear High Scores Now	Yes	No ✦	Immediately clears the high score table in the self-test.
Display FBI Screen	Yes ✦	No	Periodically displays the FBI emblem and the message "Winners Don't Use Drugs" in the attract mode. If this game is used outside of the U.S., we recommend you set this option to *No*.

✦ *Manufacturer's recommended settings*

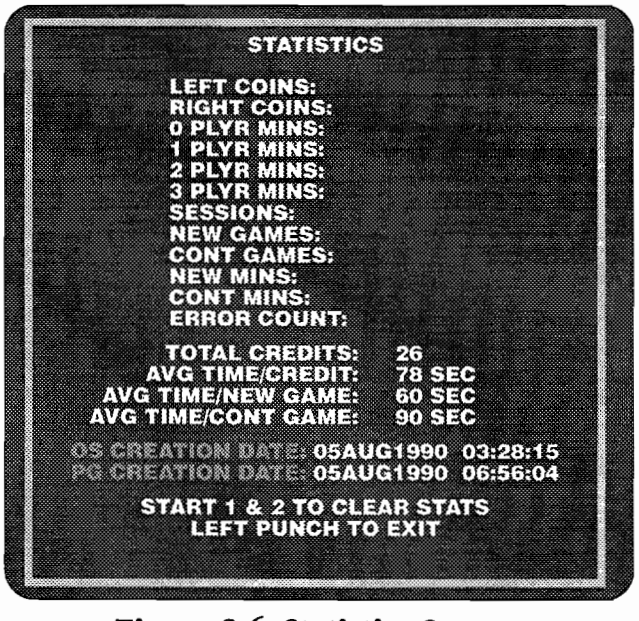

Figure 2-6 Statistics Screen

game was played by one person only.

- *2 Plyr Mins* shows the number of minutes that the game was played by two people.
- *3 Plyr Mins* shows the number of minutes that the game was played by three people.
- *Session* is measured from when the first player starts a game until the *Game Over* message appears.
- *New Games* shows the number of unique games played. A unique game is counted every time a player starts a new game (not a continued game).
- *Cont Games* shows the number of games that players continued.
- *New Mins* shows the number of minutes that the game was played as new games.
- *Cont Mins* shows the number of minutes that the game was played as continued games.
- *Error Count* shows the number of errors counted in the erasable memory. If you have an error count, the statistics may be wrong. If you consistently have errors counted for several weeks, replace the EEROM at 30E on the Pit-Fighter game PCB.
- *Total Credits* is the number of credits accumulated by the game.
- *Average Time per Credit* is displayed in seconds. This item is tabulated for all games played since the statistics were cleared. If there are no credits, this line will not be displayed.
- *Average Time per New Game* is also displayed in seconds.
- *Average Time per Continued Game* is also displayed in seconds.

Histogram 1 Screen

The first histogram screen lists the length of time for all new games, grouped in 20-second increments (except for the shortest games lasting 0–39 seconds).

Histogram 2 Screen

The second histogram screen lists the same information as Histogram 1, except for continued games.

Histogram 3 Screen

The third histogram screen lists the length in minutes for all game sessions.

Alphanumeric Test

The alphanumeric test, shown in Figure 2-7, checks the condition of the alphanumerics in the game. If you see an error on the screen, check the EPROM at 15L.

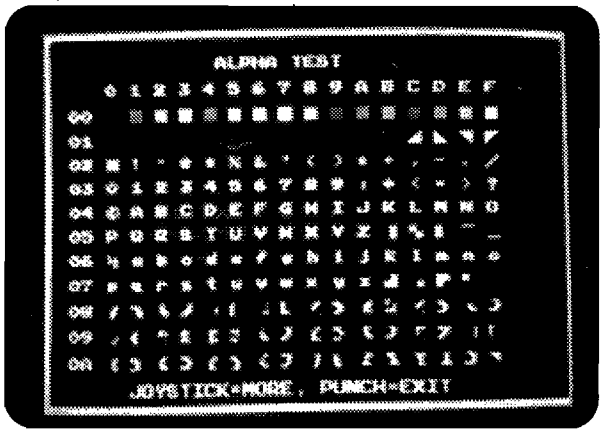

Figure 2-7 Alphanumeric Test Screen

Moving any of the joysticks up or down scrolls the screen up and down. Press any Punch button to go to the menu screen.

Motion Object Test

The motion object test screen, shown in Figure 2-8, tests the movement and color of various game objects. The most important part of this screen is the ROM status squares on the right side. The squares should all be green (indicating good motion object ROMs); red squares indicate bad ROMs.

Choose an object and move it or change it as follows:

Control:	**This action results:**
Left joystick	Left/right and up/down moves the object around on the screen.
Center joystick	Up/down enlarges/shrinks the object.
Left Jump, Kick	Selects one of the three motion objects (called 0, 1, and 2).
Center Jump, Kick	Selects a picture that will be displayed and manipulated as the motion object.

Press the left Punch button to go to the select test menu.

Playfield Test

The playfield test screen, shown in Figure 2-9, tests the movement of the playfield.

Move the left joystick up, down, left, and right to check whether the whole picture moves accordingly. Press the left Punch button to go to the menu screen.

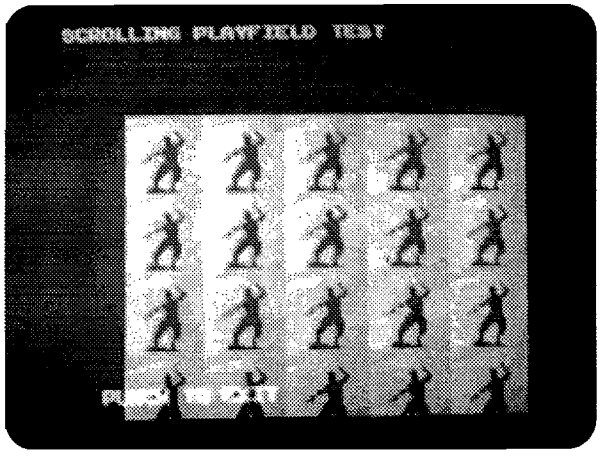

Figure 2-9 Playfield Test Screen

Color Test

This test has seven screens, the first of which is shown in Figure 2-10. Advance to each screen by pressing the Kick or Jump button.

- The first color test indicates the dynamic range of

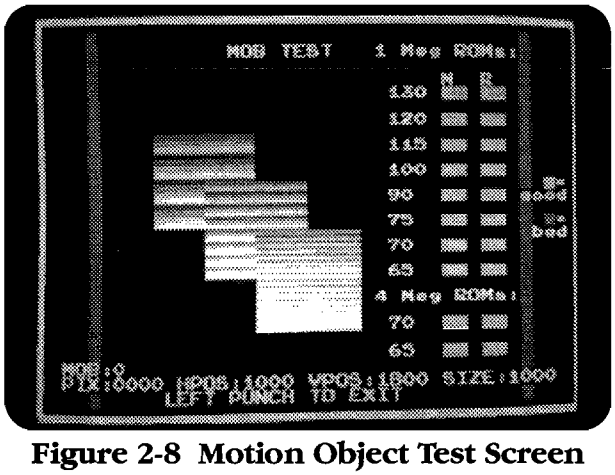

Figure 2-8 Motion Object Test Screen

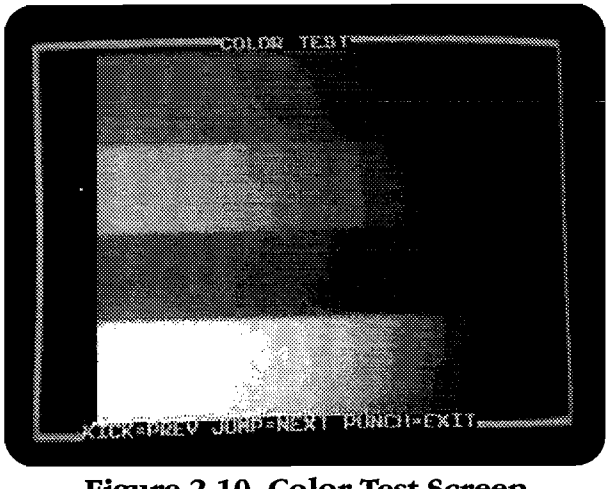

Figure 2-10 Color Test Screen

the video display color circuit. The screen should show four bands (red, green, blue, and white, from top to bottom), ranging from bright to dark, left to right. The red, green, and blue bands are produced by only one color gun being turned on in each band. At the bottom is a white band, in which all three color guns are turned on.

- The second color test shows the same as the first color test, but with two color guns being turned on in three bands—a yellow band (red and green guns), cyan band (blue and green guns), and magenta band (blue and red guns). At the bottom is a white band.
- The remaining five screens are color purity tests. The rectangles of color shown are red, green, blue, white, and grey.
  Each screen should display a straight rectangle of color, with no curving at the corners, no unevenness of color, and no lines in the display.

If any of these screens are not correct, adjust the video display as described in the video display manual. Return to the menu screen by pressing any Punch button.

Convergence Test

The convergence test has four screens—white, violet, blue, and yellow grid lines. The white screen is shown in Figure 2-11. To see the remaining screens, press any Kick or Jump button. Press any Punch button to go to the menu screen.

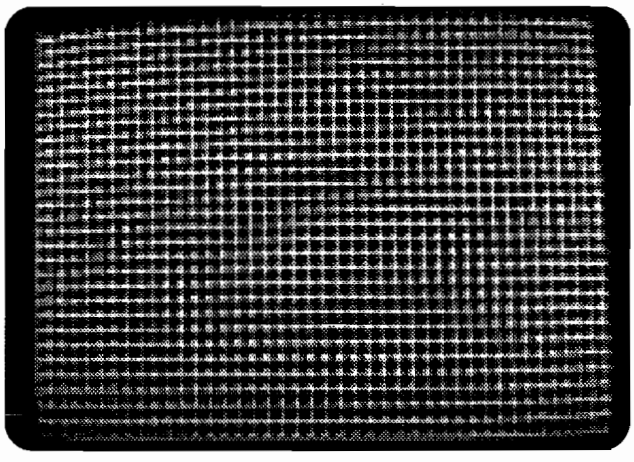

Figure 2-11 Convergence Test Screen

Check the following on the screens:

- The grid lines should be straight within 3.0 mm and the lines should not pincushion or barrel.
- The convergence of the lines on the violet and black screens should be within 2.0 mm.

If these screens do not meet these criteria, adjust the video display as described in the video display manual.

N O T E S

CHAPTER 3

Troubleshooting and Maintenance

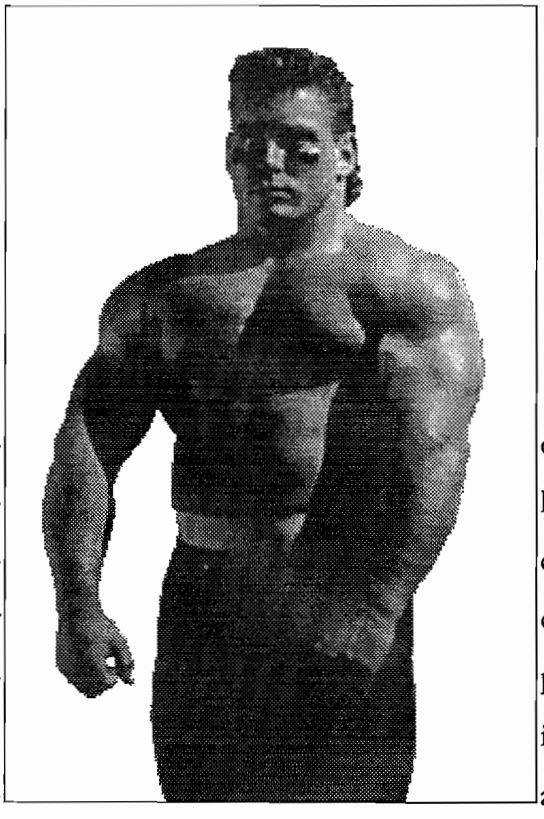

This chapter contains troubleshooting tables and repair procedures for your Pit-Fighter™ game. The chapter contains three troubleshooting tables. The first table has general troubleshooting information, the second table contains the voltage levels and test points on the game printed-circuit board, and the last table describes ROM-caused problems with specific ROMs to check and replace. The chapter also has instructions for removing and replacing the video display, in addition to repair information for the joystick control.

Table 3-1 Troubleshooting Table

Problem	Suggested Action
Coin Switch Problem	1. Check the wiring to the coin switch. 2. Check the voltage to the + side of the coin switch. 3. Test the coin switches with the sound test screen in the self-test.
Game Play Problem	1. Check the harness and connectors. 2. Perform the self-test. 3. Check the voltage levels on the PCB. See Table 3-2, *Voltage Inputs and Test Points.* 4. Check *What ROM Problems Look Like,* Table 3-3, for specific ROM problems. See Figure 4-5 for ROM locations.
Joystick or Switch Problem	1. Have the joysticks been lubricated with the correct type of lubricant? If not, lubricate them as shown in Figure 4-2. 2. Check the harnesses and connectors. 3. Check the switches on the joystick control or on the control panel. 4. If you took the joystick control apart, have you reassembled it correctly? 5. Make sure all the parts on the joystick are in good repair. Repair or replace parts.
Sound Problem	1. Is the speaker volume turned up? 2. Check the voltage on the JAMMA connector. 3. Check the wiring from the PCB to the speaker. 4. Check the voltage level to the PCB. See Table 3-2, *Voltage Inputs and Test Points.* 5. Replace the speaker.
Video Display Problem	
Screen is dark.	1. Is the game plugged in? 2. Is the game turned on? 3. Are the connections good? 4. Is the line fuse good? 5. Is the display brightness turned up? 6. Are the connections on the line filter and transformer good? 7. Are the connectors on the PCB tightly connected? 8. Check all of the items below. If you answer *no* to any question, you have a problem with the video display, not with the game circuitry. See your video display service manual. a. Do you have power to the video display? b. Are the video display's filaments lit? c. Do you have high voltage to the video display? 9. Is the voltage level to the video display PCB correct? (Power voltage is 100 VAC or 110 VAC, depending on the type of video display. Video signal voltage is 0.5 to 3.5 Volts.) 10. If the level is not correct, check the connectors and the harness.
Only a colored screen appears.	You probably have a serious RAM problem. See Table 3-5, *Colored Screens Indicating Bad RAMs.*
Display area wavers or is too small.	1. Do you have voltage to the video display PCB? 2. Do you have high voltage to the video display?
Picture is wavy.	1. Is the monitor ground connected to the monitor? 2. Are the sync inputs connected properly? Does your monitor need a separate positive sync?
Picture is upside down.	Switch the horizontal or vertical yoke wires on the display.
Convergence, purity or color problems.	Use the screens in the self-test to adjust the video display.
Picture is not centered.	Use the centering procedures in your video display manual.

Table 3-2 Voltage Inputs and Test Points on the PCBs

Voltage	Test Point or LED	Source and Purpose
+5 ± 0.25 VDC	+5V1	Logic power from the switching power supply.
	CR1 LED	Lights when 5 V is applied to the Game PCB and the reset (RST) jumper is open.
	CR5 LED	Lights when the +12 V supply on the JSA Audio II PCB is good.
	CR4 LED	Lights when the –5 V supply on the JSA Audio II PCB is good.
+12V	+V0P (pin 4 of LM324)	+12 V from the switching power supply. Positive supply for the analog circuitry.
–5V	–V0P (pin 11 of LM324)	–5V from the switching power supply (if connected). Negative supply for the analog circuitry.

Maintaining the Coin Mechanism

The coin mechanism should be cleaned every three months. For detailed parts information on the coin door, see Figure 4-3. To maintain the coin mechanism:

1. Turn off the power to the game. Open the upper coin door.
2. Open the gate on the door covering the magnet. Use the blade of a screwdriver to scrape away any metal filings collected on the magnet.
3. For a thorough cleaning, wash the coin mechanism in hot soapy water. Use a toothbrush to remove any stubborn build-up of residue in the coin path.
4. Dry the coin mechanism with compressed air.
5. If you do not want to use water, brush the loose dust off with a soft brush and scrub the residue in the coin path with a toothbrush. Blow out all the loose dust and dirt with compressed air.

NOTE

Never lubricate the coin mechanism with oil or grease.

Repairing the Video Display

The video display frame in this game is designed to be used with both horizontal- and vertical-mounting displays, as well as 19- and 25-inch displays.

Removing the Video Display

If you have a problem with the video display, first run the self-test procedure to narrow down the cause. To make adjustments to the video display, unlock the service door on the rear of the cabinet.

If you want to repair the video display, remove it from the game by following this procedure:

1. Turn the game power off and wait two minutes. Unplug the power cord for safety.
2. While you wait, unlock the top service door on the rear of the cabinet.
3. Remove the three screws that attach the attraction shield retainer, and remove retainer, shield, and attraction film. Then remove the display shield, cardboard bezels, and cleats in front of the display.

WARNING

High Voltage

The video display contains lethal high voltages. To avoid injury, do not service this display until you observe all precautions necessary for working on high-voltage equipment.

X-Radiation

This video display is designed to minimize X-radiation. However, to avoid possible exposure to soft X-radiation, never modify the high-voltage circuitry.

Implosion Hazard

The cathode-ray tube (CRT) may implode if struck or dropped. The shattered glass from the tube may cause injury up to six feet away. Use care when handling the display and when removing it from the game cabinet. Also, wear gloves to protect your hands from the sheet-metal edges.

---

4. Remove the four nuts and washers that secure the video display.
5. Discharge the high voltage from the cathode-ray tube (CRT). The display assembly contains a circuit for discharging the high voltage to ground when power is removed. However, to make certain, always discharge the display as follows:
   a. Attach one end of a solid 18-gauge wire to a well-insulated screwdriver or wooden handle.
   b. Attach the other end of the wire to an earth ground.

Table 3-3 What ROM Problems Look Like

Problem	ROM Causing the Problem	Check the ROM at:
Program works, but the motion objects or playfield are wrong.	Graphics	Playfield: 45M–130M. Motion Object High: 65N–130N. Motion Object Low: 65R–130R. Alphanumerics: 15L.
Garbage on screen; program doesn't work.	Processor	10H
	Program ROM 0	5D, 5B
Game program is erratic.	Program ROM 1	15D, 15B
No sound or erratic sound.	Audio ROM:	
	Audio Program	1B
	Audio ADPCM	7K, 7J, 7E, 7D

c. Quickly touch the blade end of the screwdriver to the CRT anode by sliding it under the anode cap.

d. Wait two minutes and repeat part c.

6. Disconnect the harness connectors from the video display.
7. Pull the video display assembly out of the cabinet. Be extremely careful.

Replacing the Video Display

Perform the following procedure to replace the video display in the cabinet.

1. Carefully lift the video display into the cabinet.
2. Install the nuts that hold the video display assembly.
3. Connect the power and signal harnesses to the video display.

   If you replace the CRT and yoke together, adjust the brightness, size, and centering as described in the video display service manual. Check the purity and convergence according to that manual, but adjust both only if required.
4. Install the video display shield, bezel, and cleats. Replace the attraction film, shield, and retainer.
5. Lock the rear service door on the cabinet.

Removing and Replacing the Joystick Control

The joystick control is shown in Figure 3-1. If you want to repair the joystick control, disassemble it by removing it from the control panel. To repair the joystick, disassemble it by removing the retaining ring at the bottom of the shaft. To replace any of the four switches, remove the two screws that secure each switch.

ROMs and RAMs

If you think you have bad ROMs or RAMs, run the self-test. If you see only a colored screen and cannot enter the self-test, see Table 3-3. Also refer to Table 3-4 if you think you have a RAM problem.

Table 3-4 Screen Colors Indicating Bad RAMs

Screen Color	RAM Error Location
Red	Working RAM
Green	Playfield RAM
Blue	Motion Object RAM

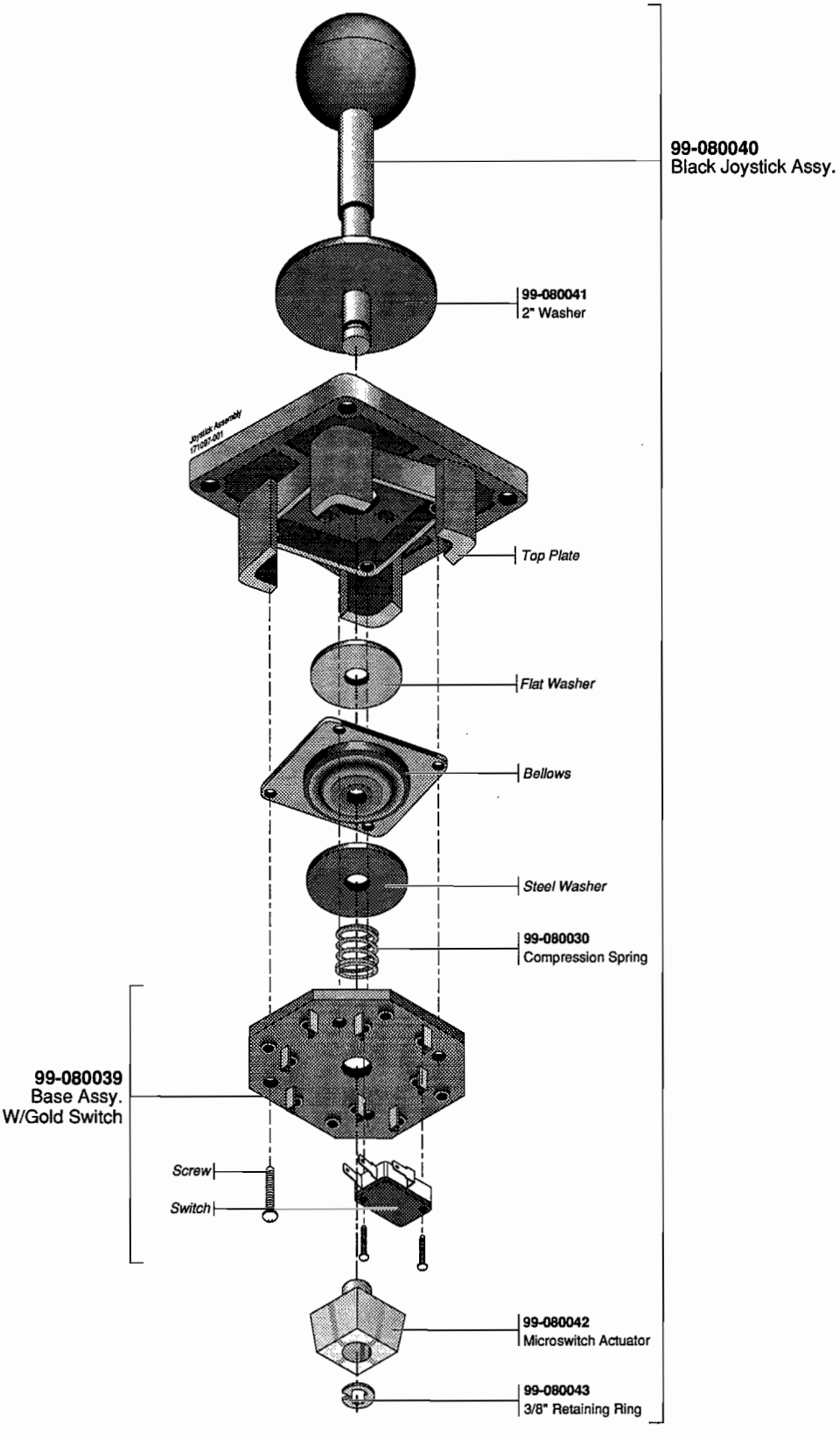

Figure 3-1 Maintaining the Joystick Control

N O T E S

CHAPTER 4

Parts Illustrations

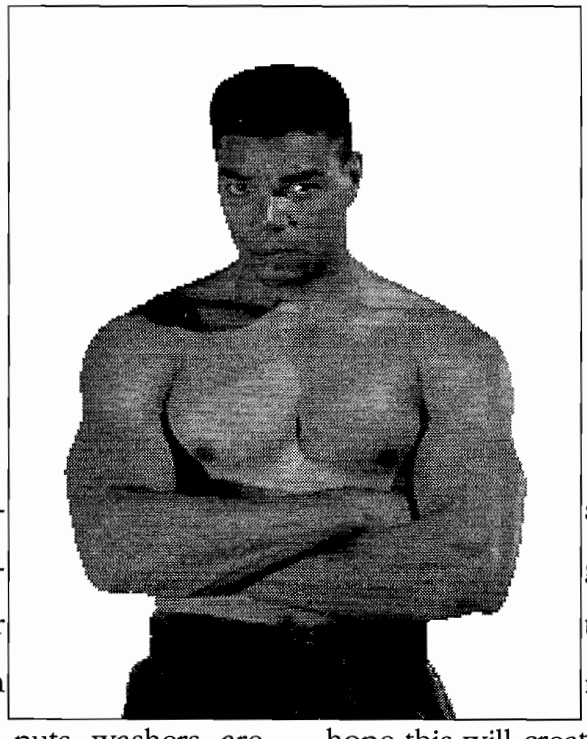

This chapter provides information you need to order replacement parts for your game. Common hardware, such as screws, nuts, washers, are included in these parts illustrations. When you order parts, give the part number, part name, the number of this manual, and the serial number of your game. With this information, we can fill your order rapidly and correctly. We hope this will create less downtime and more profit from your games. Atari Games Customer Service phone numbers are listed on the inside front cover of this manual.

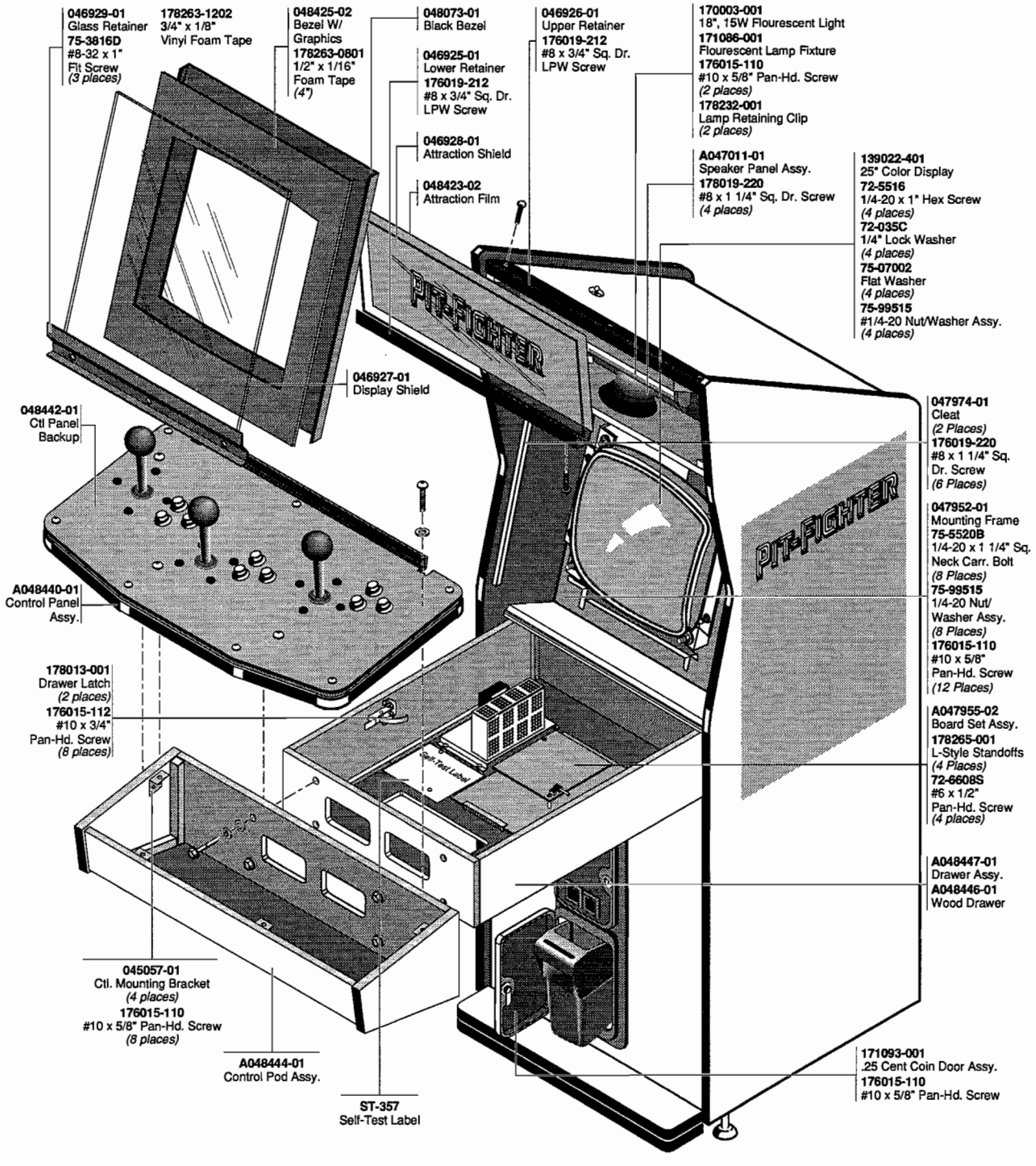

Figure 4-1 Cabinet-Mounted Assemblies, Front View
A048450-01 C

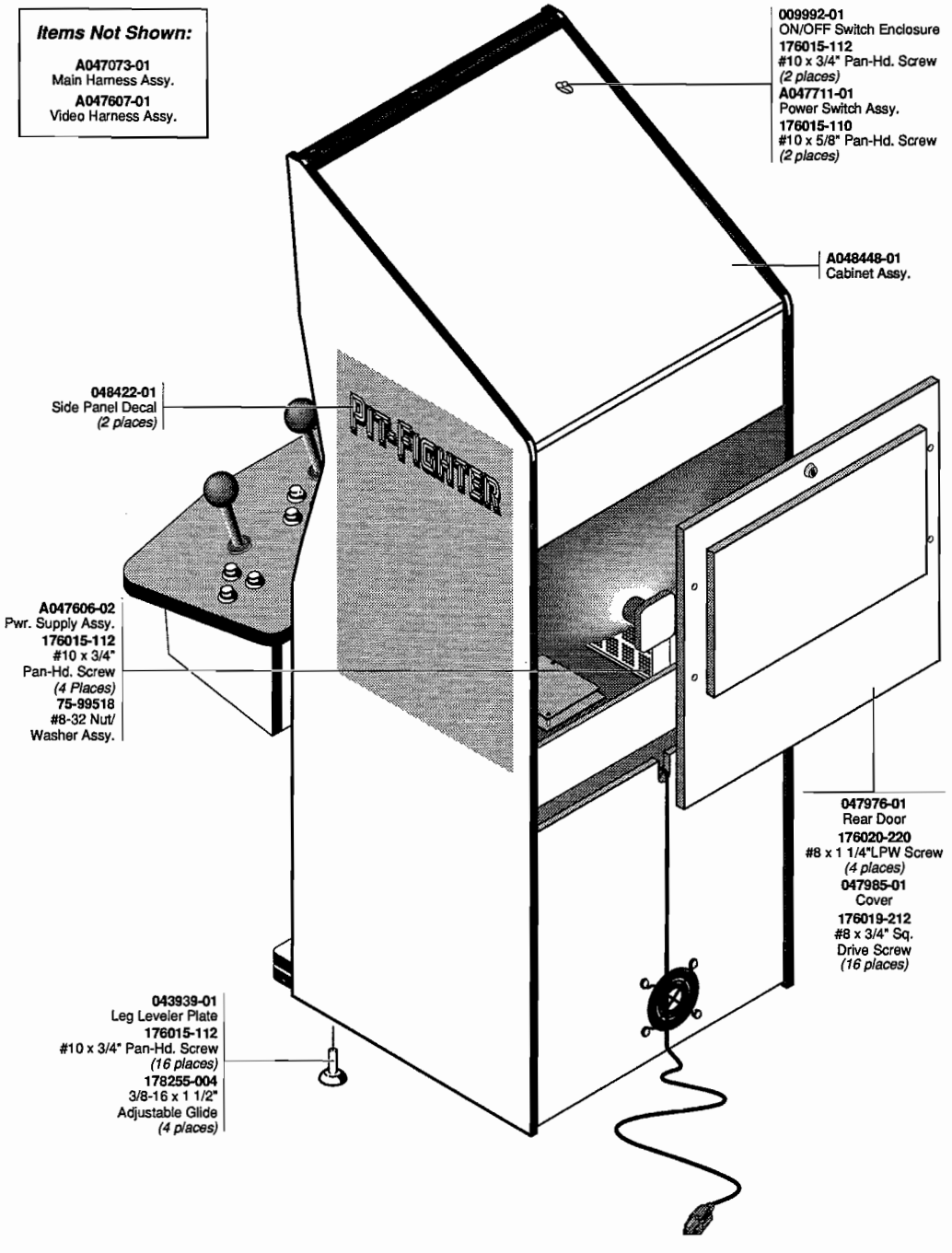

Figure 4-1 Cabinet-Mounted Assemblies, Rear View
A048450-01 C

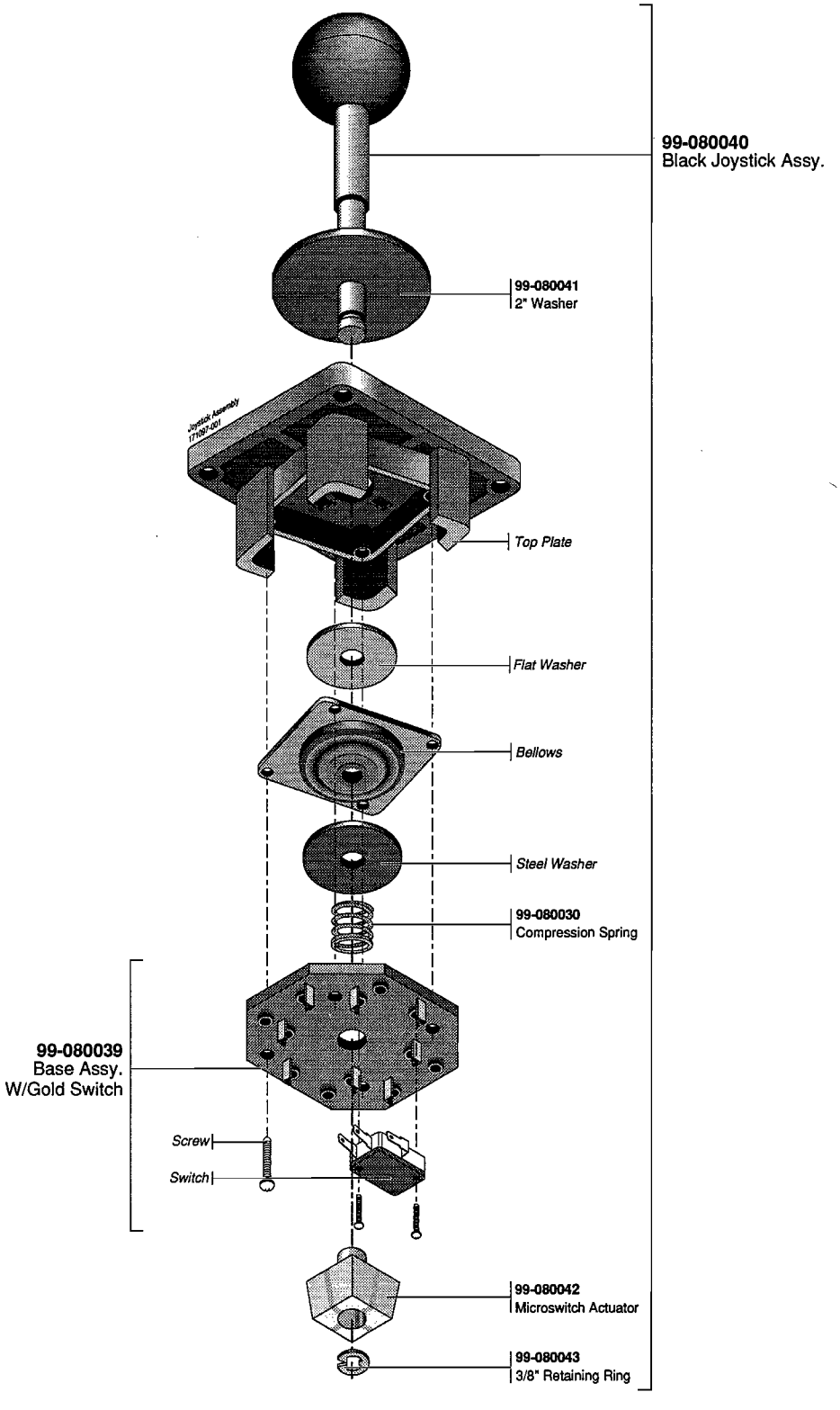

Figure 4-2 Joystick Assembly 171097-001

N O T E S

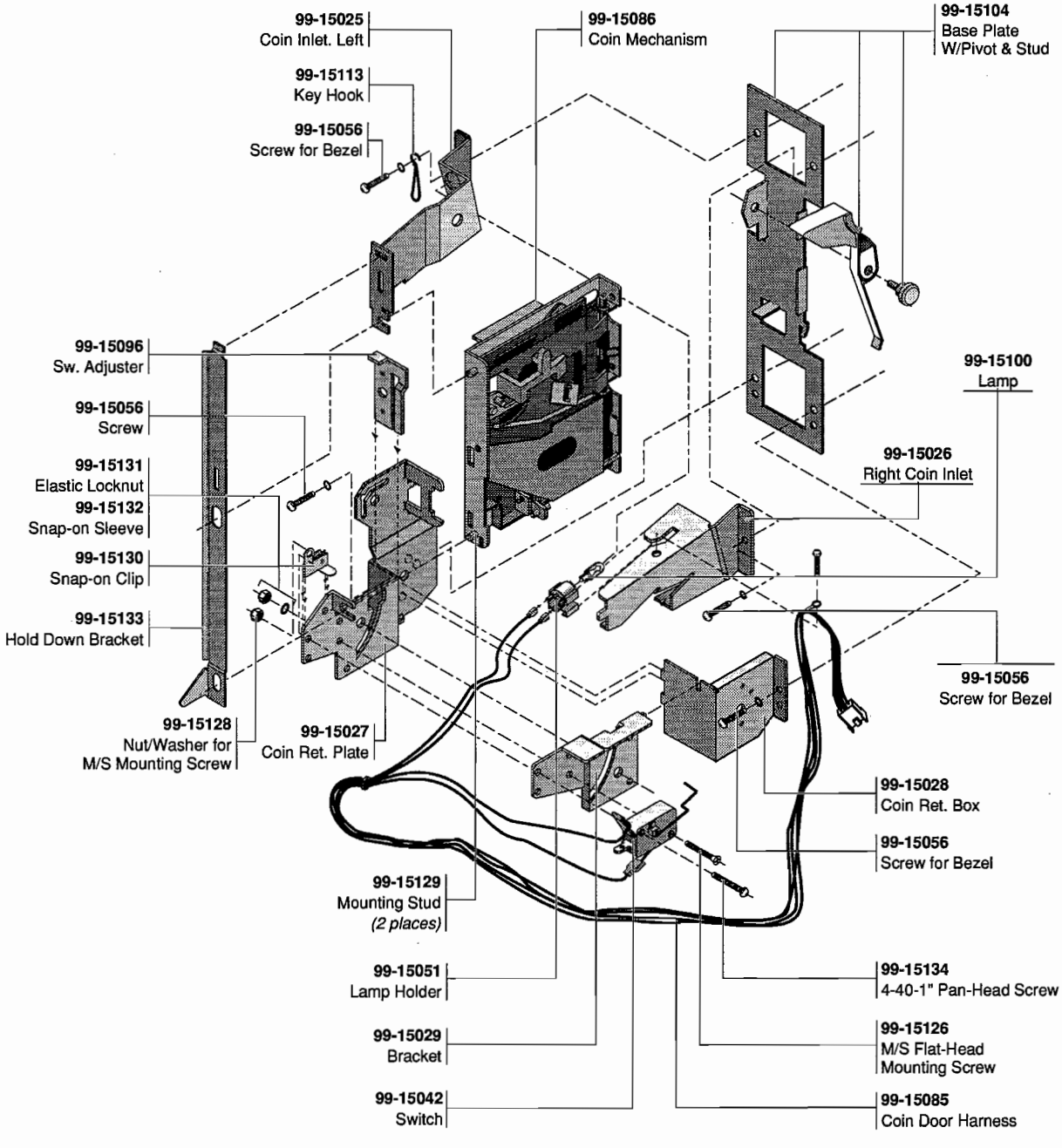

Figure 4-3 Coin Controls, Inc. Coin Door Assembly 171093-001

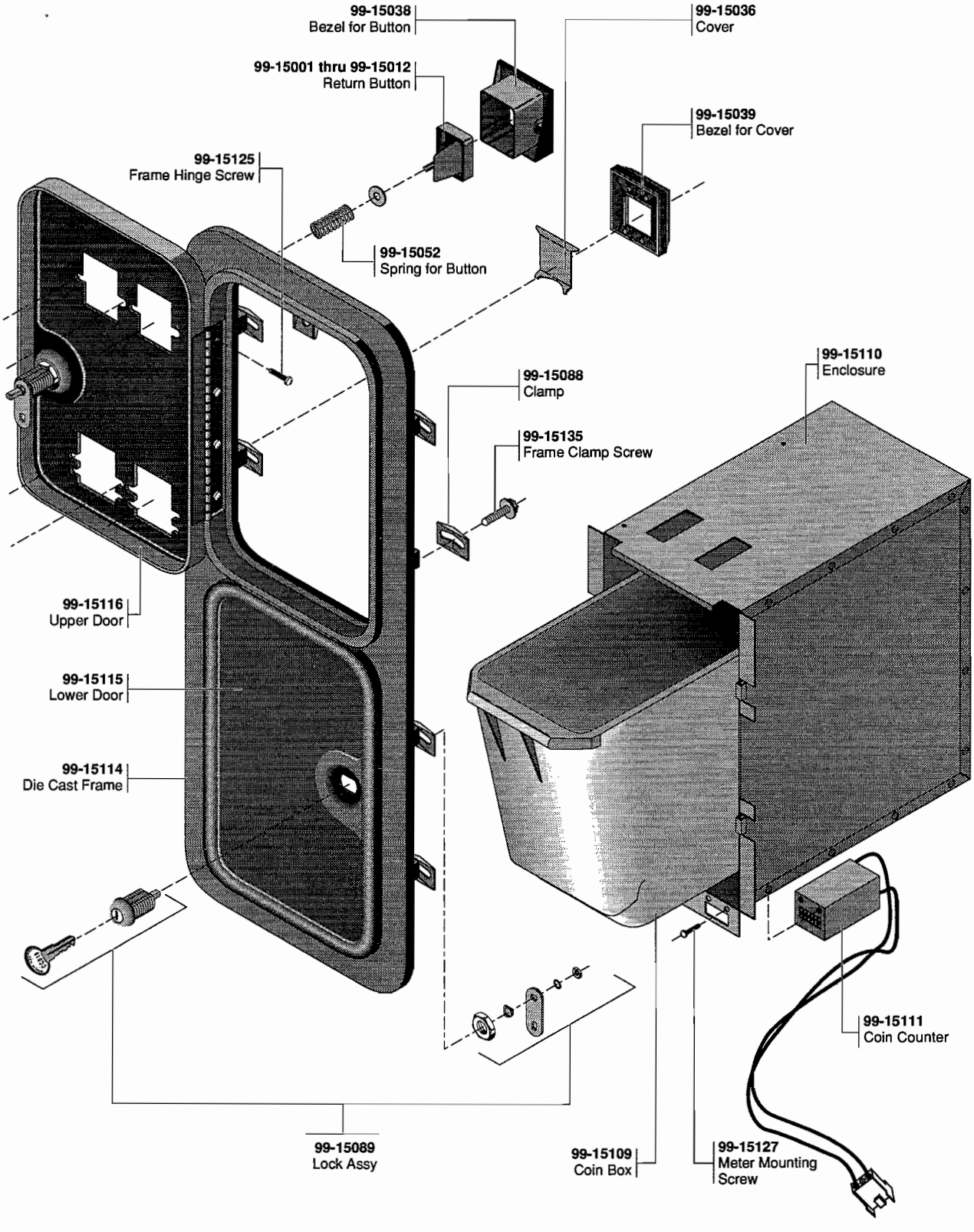

Figure 4-3 Coin Controls, Inc. Coin Door Assembly 171093-001

N O T E S

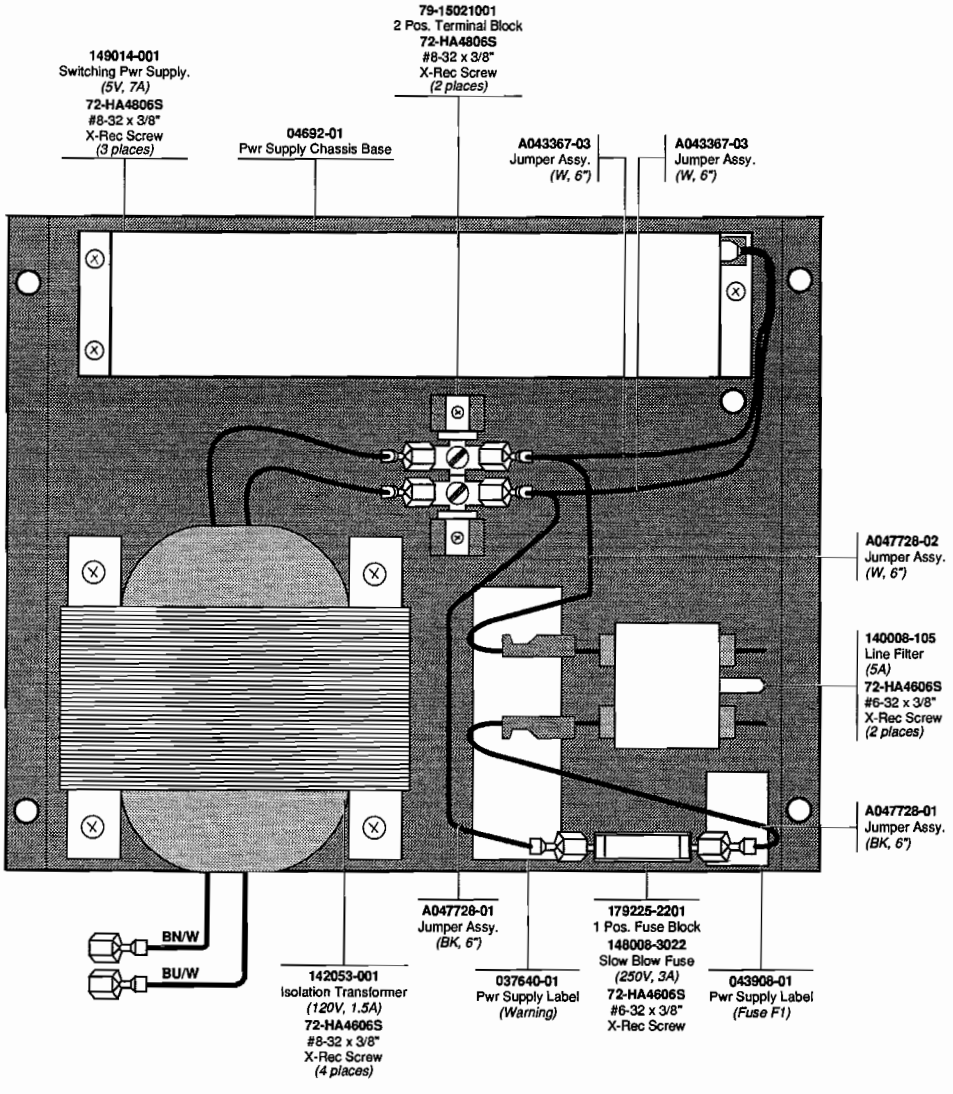

Figure 4-4 Power Supply Assembly (+5/–5/+12V)
A047606-02 C

Power Supply Assembly
Parts List

Part No.	Description	Part No.	Description
046924-01	Power Supply Chassis Base	A043367-02	Jumper Assy. (Black, 6")
149014-001	5 Volt 7 Amp Switching Power Supply	A043367-03	Jumper Assy. (White, 6")
140008-105	5 Amp Line Filter	043908-01	Power Supply Fuse Label (F1)
A047728-02	Assy., Jumper (White, 6")	72-HA4606S	Screw, Thread-Rolling, Cross-Recessed, #6-32 x 3/8"
142053-001	Transformer, Isolation (120 Volt, 1.5 Amp)	72-HA4806S	Screw, Thread-Rolling, Cross-Recessed, #8-32 x 3/8"
79-15021001	Terminal Block, 2-Position	A047728-01	Assy., Jumper (Black, 6")
179225-2201	Fuse Block, 1-Position		
146008-3022	Fuse, 3 Amp, Slow-Blow, 250 Volt		

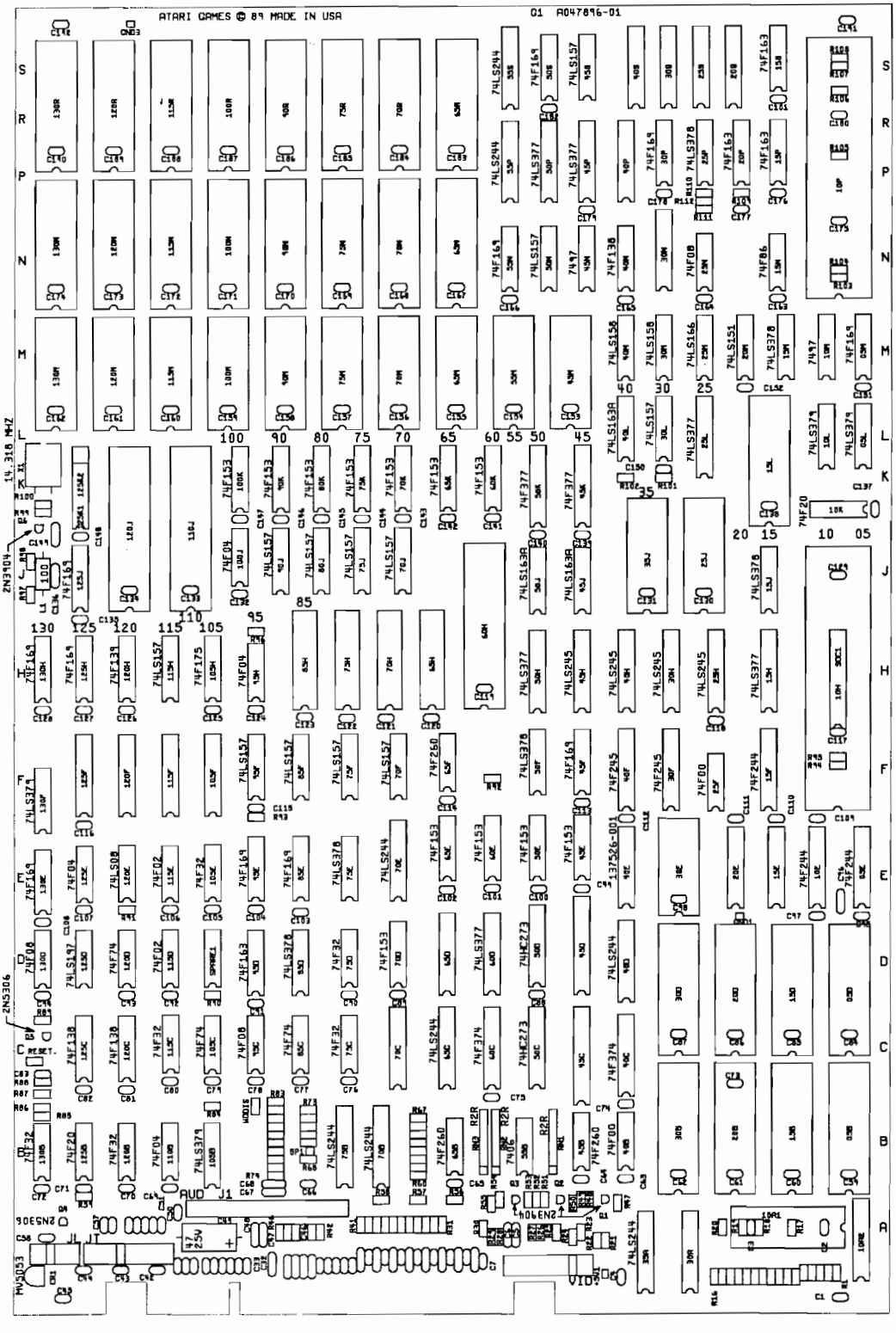

NOTE

The Pit-Fighter Board Set Assembly (part no. A047955-02) consists of:

A047896-02, Pit-Fighter Game PCB Assy. (this illustration)

A047184-05, JSA Audio II PCB Assy.

178278-616, #6 Threaded PCB Support Standoffs

177000-536, #6-32 Nylon Nut

Your Pit-Fighter Game PCB may contain 4-MB ROMs. A manual supplement with a parts list for the 4-MB ROM version is available from Atari Games Customer Service. Contact them at the locations listed on the inside front cover of this manual.

The schematic published in Chapter 5 of this manual applies to both versions of the Game PCB.

Figure 4-5 Pit-Fighter Game PCB Assembly A047896-02 A (1-MB EPROM Version)

Pit-Fighter Game PCB Assembly
Parts List

Designator	Description	Part No.
	Sockets	
	Socket, 20 Pin, .300"	179259-020
	Socket, 24 Pin, .600"	179257-024
	Socket, 28 Pin, .600"	179257-028
	Socket, 32 Pin, .600"	179257-032
	Socket, 40 Pin, .600"	179257-040
	Socket, 64 Pin, .900"	179256-064
	Integrated Circuits	
5B	IC, EPROM, 27C512	136081-1029
5D	IC, EPROM, 27C512	136081-1028
5E	IC, 74F244	137502-001
5L	IC, 74LS379	137374-001
5M	IC, 74F169	137496-001
10A2	IC, 74LS244	137038-001
10E	IC, 74F244	137502-001
10H	IC, MC68HC000P12F, L12F	137669-0001
10K	IC, 74F20	137530-001
10L	IC, 74LS379	137374-001
10M	IC, 7497	137090-001
10P	IC	136079-1053
15B	IC, EPROM, 27C512	136081-1031
15D	IC, EPROM, 27C512	136081-1030
15E	IC, GAL16V8	136079-1043
15F	IC, 74F244	137502-001
15H	IC, 74LS377	137145-001
15J	IC, 74LS378	137305-001
15L	IC, OTP, 27C512	136081-1027
15M	IC, 74LS378	137305-001
15N	IC, 74F86	137649-001
15P, 15S	IC, 74F163	137345-001
20E	IC, Slapstic 111	137412-111
20M	IC, 74LS151	137101-001
20P	IC, 74F163	137345-001
20S	IC, PROM	136079-1040
25F	IC, 74F00	137327-001
25H	IC, 74LS245	137134-001
25J	IC, RAM, 32K x 8, 70 nsec	137615-070
25L	IC, 74LS377	137145-001
25M	IC, 74LS166	137118-001
25N	IC, 74F08	137483-001
25P	IC, 74LS378	137305-001
25S	IC, PROM	136079-1041
30E	IC, 28C16-300, 300 nsec	137648-300
30F	IC, 74F245	137591-001
30H	IC, 74LS245	137134-001
30L	IC, 74LS157	137029-001
30M	IC, 74LS158	137203-001
30N	IC, GAL16V8	136079-1052
30P	IC, 74F169	137496-001
30S	IC, PROM	136079-1042
35A	IC, 74LS244	137038-001
35J	IC, RAM, 32K x 8, 70 nsec	137615-070
40B	IC, 74F00	137327-001
40C	IC, 74F374	137420-001
40D	IC, 74LS244	137038-001
40E	IC, SCUM	137526-001
40F	IC, 74F245	137591-001
40H	IC, 74LS245	137134-001
40L	IC, 74LS163 A	137114-001
40M	IC, 74LS158	137203-001
40N	IC, 74F138	137521-001
40P	IC, GAL16V8	136079-1045
40S	IC, GAL16V8	136079-1047
45B	IC, 74F260	137570-001
45C, 45D	IC, RAM, 2K x 8, 35 nsec, .3	137534-001
45E	IC, 74F153	137492-001
45F	IC, 74F169	137496-001
45H	IC, 74LS245	137134-001
45J	IC, 74LS163 A	137114-001
45K	IC, 74F377	137622-001
45M	IC, OTP, 27C512	136081-1025
45N	IC, 7497	137090-001
45P	IC, 74LS377	137145-001
45S	IC, 74LS157	137029-001
50C, 50D	IC, 74HC273	137556-001
50E	IC, 74F153	137492-001
50F	IC, 74LS378	137305-001
50H	IC, 74LS377	137145-001
50J	IC, 74LS163 A	137114-001
50K	IC, 74F377	137622-001
50N	IC, 74LS157	137029-001
50P	IC, 74LS377	137145-001
50S	IC, 74F169	137496-001
55B	IC, 7406	137052-001
55N	IC, 74F169	137496-001
55P, 55S	IC, 74LS244	137038-001
60C	IC, 74F374	137420-001
60D	IC, 74LS377	137145-001
60E	IC, 74F153	137492-001
60H	IC, PFHS	137419-104
60K	IC, 74F153	137492-001
65B	IC, 74F260	137570-001
65C	IC, 74LS244	137038-001
65D	IC, GAL16V8	136079-1046
65E	IC, 74F153	137492-001
65F	IC, 74F260	137570-001
65H	IC, VRAM, 64K x 4, 120 nsec	137553-001
65K	IC, 74F153	137492-001
65N	IC, EPROM, 27C010	136081-1002
65R	IC, EPROM, 27C010	136081-1001
70B	IC, 74LS244	137038-001
70D	IC, 74F153	137492-001
70E	IC, 74LS244	137038-001
70F	IC, 74LS157	137029-001
70H	IC, VRAM, 64K x 4, 120 nsec	137553-001
70J	IC, 74LS157	137029-001
70K	IC, 74F153	137492-001

Pit-Fighter Game PCB Assembly
Parts List, Continued

Designator	Description	Part No.
70N	IC, EPROM, 27C010	136081-1004
70R	IC, EPROM, 27C010	136081-1003
75B	IC, 74LS244	137038-001
75C, 75D	IC, 74F32	137486-001
75E	IC, 74LS378	137305-001
75F	IC, 74LS157	137029-001
75H	IC, VRAM, 64K x 4, 120 nsec	137553-001
75J	IC, 74LS157	137029-001
75K	IC, 74F153	137492-001
75M	IC, OTP, 27C512	136081-1022
75N	IC, EPROM, 27C010	136081-1006
75R	IC, EPROM, 27C010	136081-1005
80J	IC, 74LS157	137029-001
80K	IC, 74F153	137492-001
85C	IC, 74F74	137436-001
85D	IC, 74LS378	137305-001
85E	IC, 74F169	137496-001
85F	IC, 74LS157	137029-001
85H	IC, VRAM, 64K x 4, 120 nsec	137553-001
90J	IC, 74LS157	137029-001
90K	IC, 74F153	137492-001
90M	IC, OTP, 27C512	136081-1021
90N	IC, EPROM, 27C010	136081-1008
90R	IC, EPROM, 27C010	136081-1007
95C	IC, 74F08	137483-001
95D	IC, 74F163	137345-001
95E	IC, 74F169	137496-001
95F	IC, 74LS157	137029-001
95H, 100J	IC, 74F04	137437-001
100K	IC, 74F153	137492-001
100N	IC, EPROM, 27C010	136081-1010
100R	IC, EPROM, 27C010	136081-1009
105B	IC, 74LS379	137374-001
105C	IC, 74F74	137436-001
105E	IC, 74F32	137486-001
105F	IC, GAL16V8	136081-1051
105H	IC, 74F175	137498-001
110B	IC, 74F04	137437-001
110J	IC, SOS	137550-001
115C	IC, 74F32	137486-001
115D, 115E	IC, 74F02	137481-001
115F	IC, GAL16V8	136081-1050
115H	IC, 74LS157	137029-001
115N	IC, EPROM, 27C010	136081-1012
115R	IC, EPROM, 27C010	136081-1011
120B	IC, 74F32	137486-001
120C	IC, 74F138	137521-001
120D	IC, 74F74	137436-001
120E	IC, 74LS08	137012-001
120F	IC, GAL16V8	136079-1049
120H	IC, 74F139	137488-001
120J	IC, SOS	137550-001
120M	IC, OTP, 27C512	136081-1018
120N	IC, EPROM, 27C010	136081-1014
120R	IC, EPROM, 27C010	136081-1013
125B	IC, 74F20	137530-001
125C	IC, 74F138	137521-001
125D	IC, 74LS197	137240-001
125E	IC, 74F04	137437-001
125F	IC, GAL16V8	136079-1048
125H, 125J	IC, 74F169	137496-001
125K2	IC, 74LS138	137177-001
130B	IC, 74F32	137486-001
130D	IC, 74F08	137483-001
130E	IC, 74F169	137496-001
130F	IC, 74LS379	137374-001
130H	IC, 74F169	137496-001
130M	IC, OTP, 27C512	136081-1017
130N	IC, EPROM, 27C010	136081-1016
130R	IC, EPROM, 27C010	136081-1015
	Capacitors	
C1–C4	Capacitor, .1 µF, 50 V, +80%-20%, Ceramic	122002-104
C5, C6	Capacitor, 100 pF, 100 V, ±5%, Ceramic	122016-101
C7	Capacitor, .1 µF, 50 V, +80%-20%, Ceramic	122002-104
C8	Capacitor, .01 µF, 50 V, +80%-20%, Ceramic	122002-103
C9	Capacitor, .1 µF, 50 V, +80%-20%, Ceramic	122002-104
C10	Capacitor, .01 µF, 50 V, +80%-20%, Ceramic	122002-103
C11	Capacitor, .1 µF, 50 V, +80%-20%, Ceramic	122002-104
C12	Capacitor, .01 µF, 50 V, +80%-20%, Ceramic	122002-103
C13	Capacitor, .1 µF, 50 V, +80%-20%, Ceramic	122002-104
C14	Capacitor, .01 µF, 50 V, +80%-20%, Ceramic	122002-103
C15	Capacitor, .1 µF, 50 V, +80%-20%, Ceramic	122002-104
C16	Capacitor, .01 µF, 50 V, +80%-20%, Ceramic	122002-103
C17	Capacitor, .1 µF, 50 V, +80%-20%, Ceramic	122002-104
C18	Capacitor, .01 µF, 50 V, +80%-20%, Ceramic	122002-103
C19	Capacitor, .1 µF, 50 V, +80%-20%, Ceramic	122002-104
C20	Capacitor, .01 µF, 50 V, +80%-20%, Ceramic	122002-103
C21	Capacitor, .1 µF, 50 V, +80%-20%, Ceramic	122002-104
C22	Capacitor, .01 µF, 50 V, +80%-20%, Ceramic	122002-103

Pit-Fighter Game PCB Assembly
Parts List, Continued

Designator	Description	Part No.
C23–C27	Capacitor, .1 µF, 50 V, +80%-20%, Ceramic	122002-104
C28–C32	Capacitor, 100 pF, 100 V, ±5%, Ceramic	122016-101
C33–C46	Capacitor, .1 µF, 50 V, +80%-20%, Ceramic	122002-104
C47, C48	Capacitor, 100 pF, 100 V, ±5%, Ceramic	122016-101
C49	Capacitor, 47 µF, 25 V, Electrolytic	124009-476
C50–C66	Capacitor, .1 µF, 50 V, +80%-20%, Ceramic	122002-104
C67, C68	Capacitor, 100 pF, 100 V, ±5%, Ceramic	122016-101
C69–C95, C97–C135	Capacitor, .1 µF, 50 V, +80%-20%, Ceramic	122002-104
C136	Capacitor, 100 pF, 100 V, ±5%, Ceramic	122016-101
C137–C148	Capacitor, .1 µF, 50 V, +80%-20%, Ceramic	122002-104
C149	Capacitor, 100 pF, 100 V, ±5%, Ceramic	122016-101
C150–C192	Capacitor, .1 µF, 50 V, +80%-20%, Ceramic	122002-104
	Miscellaneous	
CR1	Diode, MV5053, Light Emitting	131027-002
++1005V1	Test Point	179051-001
GND1, GND3	Test Point	179051-001
L1	Inductor, 100 µH	141024-001
	Connectors	
AUD(J1)	Conn, 40 Ckt, .1 x .1 Hdr	179291-040
JL	Conn, 6 Ckt, Hdr, .100 Ctr, Key 4	179118-006
JT	Conn, 11 Ckt, Hdr, .100 Ctr, Key 2	179118-011
RESET.	Conn, 2 Ckt, Hdr, .100 Ctr	179048-002
VID	Conn, 11 Ckt, Hdr, .100 Ctr, Key 3	179118-011
WDDIS	Conn, 2 Ckt, Hdr, .100 Ctr	179048-002
	Transistors	
Q1–Q3	Transistor, 2N3904	133041-001
Q4, Q5	Transistor, 2N5306	133033-001
Q6	Transistor, 2N3904	133041-001
	Resistors	
R1–R4	Resistor, 10 KΩ, ±5%, 1/8 W	110027-103
R5	Resistor, 470 Ω, ±5%, 1/8 W	110027-471
R6	Resistor, 10 KΩ, ±5%, 1/8 W	110027-103
R7	Resistor, 470 Ω, ±5%, 1/8 W	110027-471
R8, R9	Resistor, 10 KΩ, ±5%, 1/8 W	110027-103
R10	Resistor, 470 Ω, ±5%, 1/8 W	110027-471
R11	Resistor, 10 KΩ, ±5%, 1/8 W	110027-103
R12	Resistor, 470 Ω, ±5%, 1/8 W	110027-471
R13–R16	Resistor, 1 KΩ, ±5%, 1/8 W	110027-102
R17, R18	Resistor, 100 Ω, ±5%, 1/8 W	110027-101
R19	Resistor, 220 Ω, ±5%, 1/8 W	110027-221
R20	Resistor, 10 KΩ, ±5%, 1/8 W	110027-103
R21	Resistor, 100 Ω, ±5%, 1/8 W	110027-101
R22	Resistor, 47 Ω, ±5%, 1/8 W	110027-470
R23	Resistor, 100 Ω, ±5%, 1/8 W	110027-101
R24, R25	Resistor, 47 Ω, ±5%, 1/8 W	110027-470
R26	Resistor, 100 Ω, ±5%, 1/8 W	110027-101
R27–R29	Resistor, 220 Ω, ±5%, 1/8 W	110027-221
R30–R34, R36–R38, R40	Resistor, 470 Ω, ±5%, 1/8 W	110027-471
R42, R43	Resistor, 10 Ω, ±5%, 1/8 W	110027-100
R44–R46	Resistor, 470 Ω, ±5%, 1/8 W	110027-471
R47	Resistor, 47 Ω, ±5%, 1/8 W	110027-470
R48	Resistor, 2.2 KΩ, ±5%, 1/8 W	110027-222
R49	Resistor, 1 KΩ, ±5%, 1/8 W	110027-102
R50	Resistor, 47 Ω, ±5%, 1/8 W	110027-470
R51	Resistor, 2.2 KΩ, ±5%, 1/8 W	110027-222
R52	Resistor, 1 KΩ, ±5%, 1/8 W	110027-102
R53	Resistor, 47 Ω, ±5%, 1/8 W	110027-470
R54	Resistor, 2.2 KΩ, ±5%, 1/8 W	110027-222
R55–R57	Resistor, 1 KΩ, ±5%, 1/8 W	110027-102
R58	Resistor, 470 Ω, ±5%, 1/8 W	110027-471
R59–R69	Resistor, 1 KΩ, ±5%, 1/8 W	110027-102
R70	Resistor, 470 Ω, ±5%, 1/8 W	110027-471
R71	Resistor, 1 KΩ, ±5%, 1/8 W	110027-102
R72	Resistor, 470 Ω, ±5%, 1/8 W	110027-471
R73, R74	Resistor, 1 KΩ, ±5%, 1/8 W	110027-102
R75, R76	Resistor, 470 Ω, ±5%, 1/8 W	110027-471
R77	Resistor, 1 KΩ, ±5%, 1/8 W	110027-102
R78	Resistor, 470 Ω, ±5%, 1/8 W	110027-471
R79	Resistor, 1 KΩ, ±5%, 1/8 W	110027-102
R80	Resistor, 470 Ω, ±5%, 1/8 W	110027-471
R81	Resistor, 1 KΩ, ±5%, 1/8 W	110027-102
R82	Resistor, 470 Ω, ±5%, 1/8 W	110027-471
R83	Resistor, 10 KΩ, ±5%, 1/8 W	110027-103
R85	Resistor, 1 KΩ, ±5%, 1/8 W	110027-102
R86, R87	Resistor, 10 Ω, ±5%, 1/8 W	110027-100
R88	Resistor, 100 KΩ, ±5%, 1/8 W	110027-104
R89	Resistor, 220 Ω, ±5%, 1/8 W	110027-221
R90	Resistor, 10 Ω, ±5%, 1/8 W	110027-100
R91	Resistor, 1 KΩ, ±5%, 1/8 W	110027-102
R92	Resistor, 10 Ω, ±5%, 1/8 W	110027-100
R94–R96	Resistor, 1 KΩ, ±5%, 1/8 W	110027-102
R97, R98	Resistor, 100 Ω, ±5%, 1/8 W	110027-101
R99, R100	Resistor, 10 KΩ, ±5%, 1/8 W	110027-103
R101	Resistor, 10 Ω, ±5%, 1/8 W	110027-100
R103–R105	Resistor, 1 KΩ, ±5%, 1/8 W	110027-102
R106	Resistor, 470 Ω, ±5%, 1/8 W	110027-471
R107, R108	Resistor, 1 KΩ, ±5%, 1/8 W	110027-102
RN1–RN3	Resistor Network, R2R	118016-001

NOTES:

1. THE FOLLOWING COMPONENTS ARE NOT STUFFED:
   R1,R2,R15,R16,R41,R55,R67.
   C1,C6,C7,C44,C46,C62.
   L1,X1,Q3.

NOTE

The Pit-Fighter Board Set Assembly (part no. A047955-02) consists of:

A047896-02, Pit-Fighter Game PCB Assy.

A047184-05, JSA Audio II PCB Assy. (this illustration)

178278-616, #6 Threaded PCB Support Standoffs

177000-536, #6-32 Nylon Nut

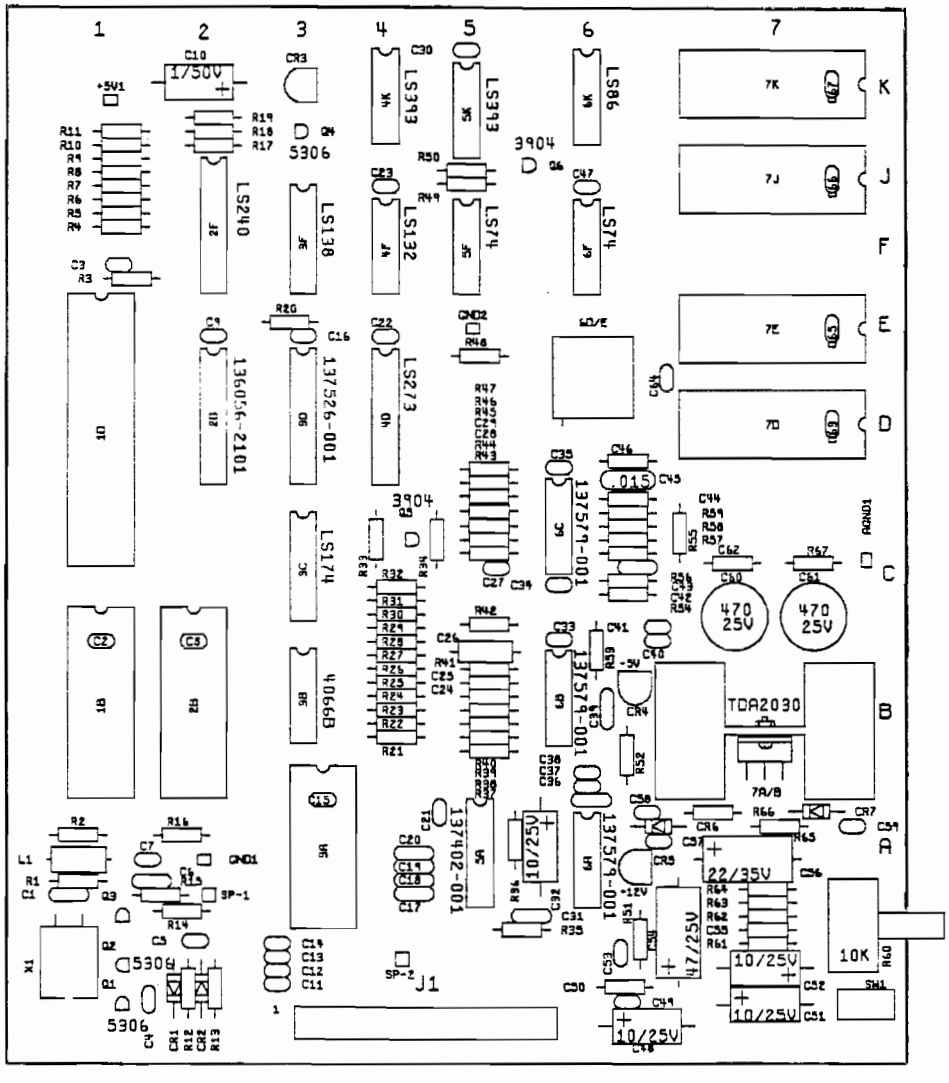

Figure 4-6 JSA Audio II PCB Assembly A047184-05 B

JSA Audio II PCB Assembly
Parts List

Designator	Description	Part No.
	Sockets	
1B	Socket, 28 Pin, .600-Inch	179257-028
1D	Socket, 40 Pin, .600-Inch	179257-040
2B	Socket, 28 Pin, .600-Inch	179257-028
3A	Socket, 24 Pin, .600-Inch	179257-024
7D, 7E, 7J, 7K	Socket, 28 Pin, .600-Inch	179257-028
	Miscellaneous	
J1	Connector, 40-Ckt, .1 x .1	179292-040
7A/B	Nut/Washer Assy, #6-32	75-99516
7A/B	Screw, Pan Hd, X-Rec, #6-32 x 3/8" L	72-1606S
++1005V1	Test Point	179051-001
AGND1	Test Point	179051-001
GND1, GND2	Test Point	179051-001
HS1	Heat Sink, TDA2030	178190-016
SW1	Switch, Slide, SPDT	160040-001
7A/B	Thermal Compound	78-16001
	Integrated Circuits	
1B	Integrated Circuit, EPROM, 200nsec	136081-1060
1D	Integrated Circuit, 6502 A	137577-001
2B	Integrated Circuit, RAM, 8Kx8, 100 nsec	137535-004
2D	Integrated Circuit, PAL16L8	136056-2101
2F	Integrated Circuit, 74LS240	137251-001
3A	Integrated Circuit, YM2151	137401-001
3B	Integrated Circuit, 4066B	137580-001
3C	Integrated Circuit, 74LS174	137122-001
3D	Integrated Circuit, SCUM	137526-001
3F	Integrated Circuit, 74LS138	137177-001
4D	Integrated Circuit, 74LS273	137040-001
4F	Integrated Circuit, 74LS132	137096-001
4K	Integrated Circuit, 74LS393	137146-001
5A	Integrated Circuit, YM3012	137402-001
5F	Integrated Circuit, 74LS74	137023-001
5K	Integrated Circuit, 74LS393	137146-001
6A, 6B, 6C	Integrated Circuit	137579-001
6D/E	Integrated Circuit (Surface Mount)	137607-001
6F	Integrated Circuit, 74LS74	137023-001
6K	Integrated Circuit, 74LS86	137079-001
7A/B	Integrated Circuit, TDA2030	137301-001
7D	Integrated Circuit, OTP, 200 nsec	136081-1064
7E	Integrated Circuit, OTP, 200 nsec	136081-1063
7J	Integrated Circuit, OTP, 200 nsec	136081-1062
7K	Integrated Circuit, OTP, 200 nsec	136081-1061
	Capacitors	
C2-C5, C8, C9	Capacitor, .1 µF, 50 V, Ceramic	122002-104
C10	Capacitor, 1 µF, 50 V, Electrolytic	124001-105
C11-C16	Capacitor, .1 µF, 50 V, Ceramic	122002-104
C17-C20	Capacitor, 100 pF, 100 V, Ceramic	122016-101
C21-C23	Capacitor, .1 µF, 50 V, Ceramic	122002-104
C24	Capacitor, .22 µF, 50 V, Ceramic	122017-224
C25	Capacitor, 3300 pF, 50 V	122015-332
C26	Capacitor, .0022 µF, 100 V, Plastic	121022-222
C27	Capacitor, .1 µF, 50 V, Ceramic	122002-104
C28	Capacitor, .0068 µF, 50 V, Ceramic	122015-682
C29	Capacitor, .22 µF, 50 V, Ceramic	122017-224
C30	Capacitor, .1 µF, 50 V, Ceramic	122002-104
C31	Capacitor, .001 µF, 50 V, Ceramic	122002-102
C32	Capacitor, 10 µF, 25 V, Electrolytic	124009-106
C33-C35	Capacitor, .1 µF, 50 V, Ceramic	122002-104
C36	Capacitor, .001 µF, 50 V, Ceramic	122002-102
C37, C38	Capacitor, .1 µF, 50 V, Ceramic	122002-104
C39	Capacitor, .001 µF, 50 V, Ceramic	122002-102
C40, C41	Capacitor, .1 µF, 50 V, Ceramic	122002-104
C42	Capacitor, .0068 µF, 50 V, Ceramic	122015-682
C43	Capacitor, .001 µF, 50 V, Ceramic	122002-102
C45	Capacitor, .015 µF, 100 V, ±5%, Poly, Radial	126009-153
C47	Capacitor, .1 µF, 50 V, Ceramic	122002-104
C48	Capacitor, 10 µF, 25 V, Electrolytic	124009-106
C49	Capacitor, .1 µF, 50 V, Ceramic	122002-104
C50	Capacitor, .22 µF, 50 V, Ceramic	122017-224
C51, C52	Capacitor, 10 µF, 25 V, Electrolytic	124009-106
C53	Capacitor, .1 µF, 50 V, Ceramic	122002-104
C54	Capacitor, 47 µF, 25 V, Electrolytic	124009-476
C55	Capacitor, .22 µF, 50 V, Ceramic	122017-224
C56	Capacitor, 22 µF, 35 V, Electrolytic	124000-226
C57-C59	Capacitor, .1 µF, 50 V, Ceramic	122002-104
C60, C61	Capacitor, 470 µF, 25 V, Electrolytic, Radial	123003-477
C63-C67	Capacitor, .1 µF, 50 V, Ceramic	122002-104
	Diodes	
CR1, CR2	Diode, 1N4001	131048-001
CR3-CR5	Diode, MV5053, Light-Emitting	131027-002
CR6, CR7	Diode, 1N4001	131048-001
	Transistors	
Q1, Q2, Q4	Transistor, 2N5306	133033-001
Q5, Q6	Transistor, 2N3904	133041-001
	Resistors	
R3	Resistor, 10 KΩ, ±5%, 1/8 W	110027-103
R4-R12	Resistor, 1 KΩ, ±5%, 1/8 W	110027-102
R13	Resistor, 0 Ω, ±5%, 1/4 W	110005-001
R14, R17	Resistor, 1 KΩ, ±5%, 1/8 W	110027-102
R18	Resistor, 100 KΩ, ±5%, 1/8 W	110027-104
R19	Resistor, 240 Ω, ±5%, 1/8 W	110027-241
R20	Resistor, 10 KΩ, ±5%, 1/8 W	110027-103
R21	Resistor, 7.5 KΩ, ±5%, 1/8 W	110027-752
R22	Resistor, 15 KΩ, ±5%, 1/8 W	110027-153
R23	Resistor, 7.5 KΩ, ±5%, 1/8 W	110027-752
R24, R25	Resistor, 30 KΩ, ±5%, 1/8 W	110027-303
R26, R27	Resistor, 15 KΩ, ±5%, 1/8 W	110027-153
R28	Resistor, 7.5 KΩ, ±5%, 1/8 W	110027-752
R29, R30	Resistor, 470 Ω, ±5%, 1/8 W	110027-471
R31-R33	Resistor, 1 KΩ, ±5%, 1/8 W	110027-102

JSA Audio II PCB Assembly
Parts List, Continued

Designator	Description	Part No.	Designator	Description	Part No.
R34	Resistor, 150 KΩ, ±5%, 1/8 W	110027-154	R51	Resistor, 1.2 KΩ, ±5%, 1/8 W	110027-122
			R52	Resistor, 470 Ω, ±5%, 1/8 W	110027-471
R35	Resistor, 470 Ω, ±5%, 1/8 W	110027-471	R53	Resistor, 100 KΩ, ±5%, 1/8 W	110027-104
R36	Resistor, 560 Ω, ±5%, 1/8 W	110027-561			
R37	Resistor, 3.3 KΩ, ±5%, 1/8 W	110027-332	R54	Resistor, 6.8 KΩ, ±5%, 1/8 W	110027-682
R38, R39	Resistor, 12 KΩ, ±5%, 1/8 W	110027-123	R56	Resistor, 20 KΩ, ±5%, 1/8 W	110027-203
			R57	Resistor, 10 KΩ, ±5%, 1/8 W	110027-103
R40	Resistor, 20 KΩ, ±5%, 1/8 W	110027-203	R58	Resistor, 6.8 KΩ, ±5%, 1/8 W	110027-682
R42	Resistor, 100 KΩ, ±5%, 1/8 W	110027-104			
R43	Resistor, 2 KΩ, ±5%, 1/8 W	110027-202	R59	Resistor, 16 KΩ, ±5%, 1/8 W	110027-163
R44	Resistor, 10 KΩ, ±5%, 1/8 W	110027-103	R60	Potentiometer, 10 KΩ, Horizontal	119022-103
			R61	Resistor, 15 KΩ, ±5%, 1/8 W	110027-153
R45	Resistor, 68 KΩ, ±5%, 1/8 W	110027-683	R62, R63	Resistor, 47 KΩ, ±5%, 1/8 W	110027-473
R46	Resistor, 15 KΩ, ±5%, 1/8 W	110027-153			
R47	Resistor, 33 KΩ, ±5%, 1/8 W	110027-333	R64	Resistor, 68 KΩ, ±5%, 1/8 W	110027-683
R48	Resistor, 1 KΩ, ±5%, 1/8 W	110027-102	R65	Resistor, 33 KΩ, ±5%, 1/8 W	110027-333
			R66	Resistor, 1 KΩ, ±5%, 1/8 W	110027-102
R49, R50	Resistor, 10 KΩ, ±5%, 1/8 W	110027-103			

CHAPTER 5

Schematic Diagrams

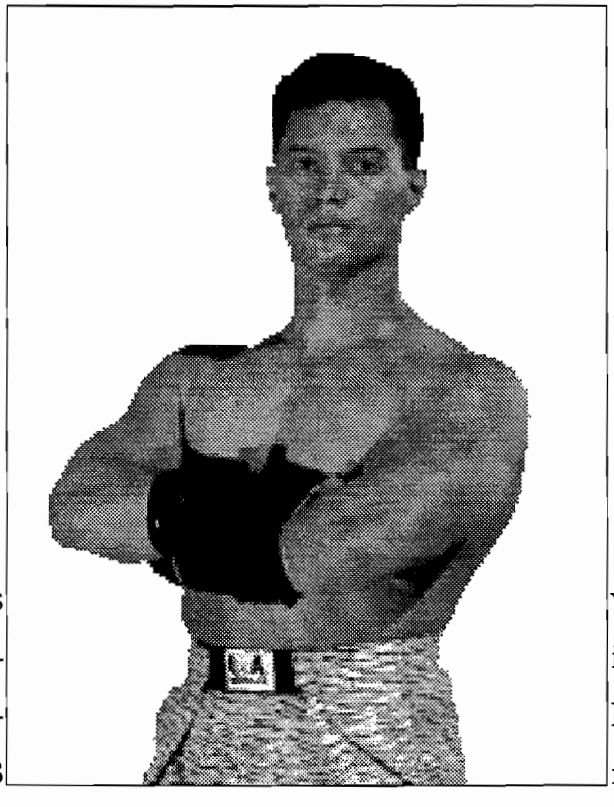

This chapter contains the schematics diagrams for your Pit-Fighter™ game PCB and the JSA Audio II PCB. The game wiring diagram is also included. The two PCB assembly drawings are illustrated in Chapter 4 of this manual.

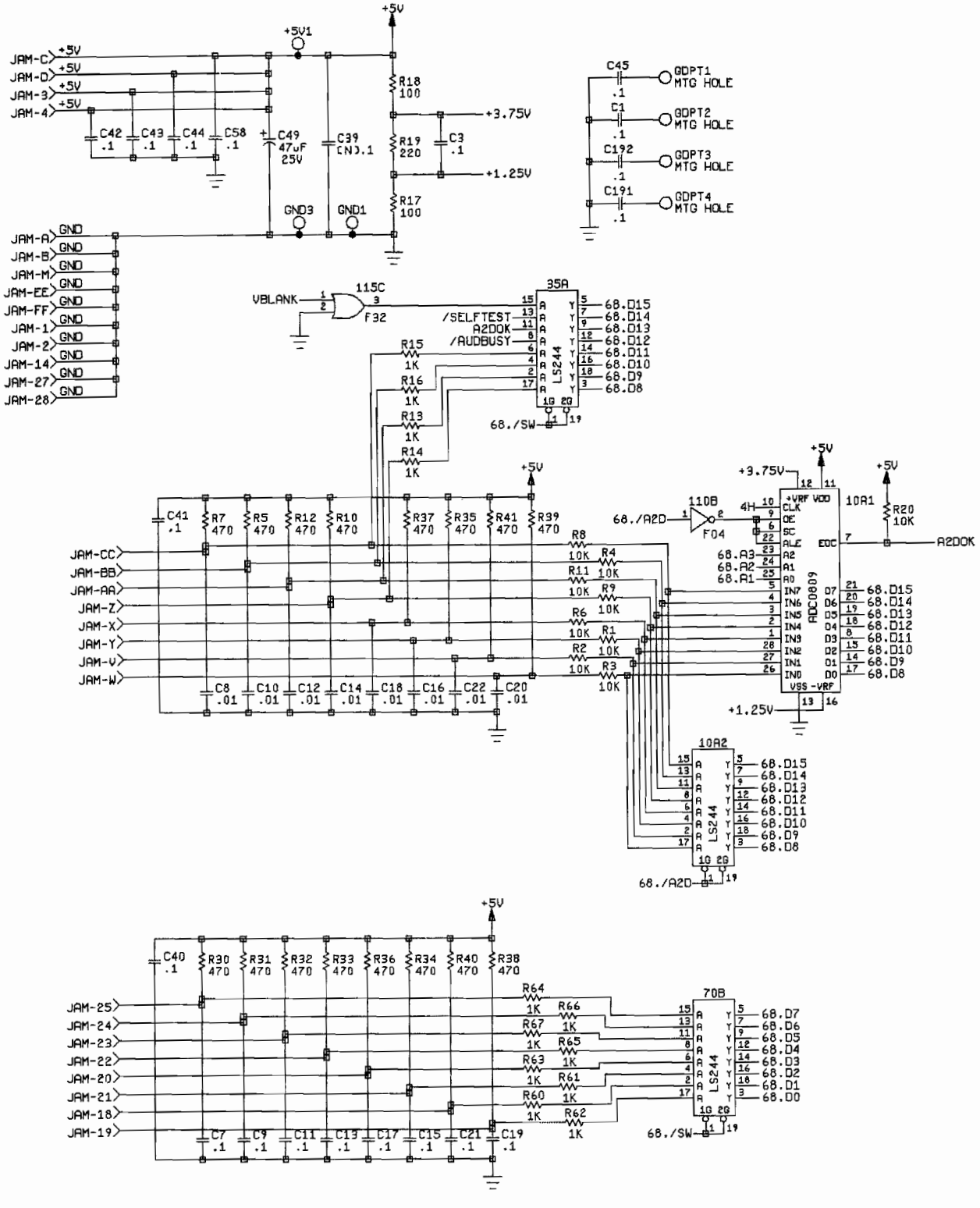
+5V
+5V1
JAM-C
JAM-D
JAM-3
JAM-4
C42 .1
C43 .1
C44 .1
C58 .1
C49 47uF 25V
C39 .1
R18 100
R19 220
R17 100
C3 .1
+3.75V
+1.25V
GND3
GND1
C45 .1
C1 .1
C192 .1
C191 .1
MTG HOLE
JAM-A
JAM-B
JAM-M
JAM-EE
JAM-FF
JAM-1
JAM-2
JAM-14
JAM-27
JAM-28
GND
VBLANK
115C
F32
35A
LS244
/SELFTEST
A2DOK
/AUDBUSY
68./SW
68.D15
68.D14
68.D13
68.D12
68.D11
68.D10
68.D9
68.D8
R15 1K
R16 1K
R13 1K
R14 1K
C41 .1
R7 470
R5 470
R12 470
R10 470
R37 470
R35 470
R41 470
R39 470
JAM-CC
JAM-BB
JAM-AA
JAM-Z
JAM-X
JAM-Y
JAM-V
JAM-W
C8 .01
C10 .01
C12 .01
C14 .01
C18 .01
C16 .01
C22 .01
C20 .01
R8 10K
R4 10K
R11 10K
R9 10K
R6 10K
R1 10K
R2 10K
R3 10K
68./A2D
110B
F04
4H
+3.75V
10A1
ADC0809
+VRF VDD
CLK
OE
SC
ALE
EOC
A2DOK
68.A3
68.A2
68.A1
IN7
IN6
IN5
IN4
IN3
IN2
IN1
IN0
VSS -VRF
R20 10K
10A2
C40 .1
R30 470
R31 470
R32 470
R33 470
R36 470
R34 470
R40 470
R38 470
JAM-25
JAM-24
JAM-23
JAM-22
JAM-20
JAM-21
JAM-18
JAM-19
C7 .1
C9 .1
C11 .1
C13 .1
C17 .1
C15 .1
C21 .1
C19 .1
R64 1K
R66 1K
R67 1K
R65 1K
R63 1K
R61 1K
R60 1K
R62 1K
70B
68.D7
68.D6
68.D5
68.D4
68.D3
68.D2
68.D1
68.D0

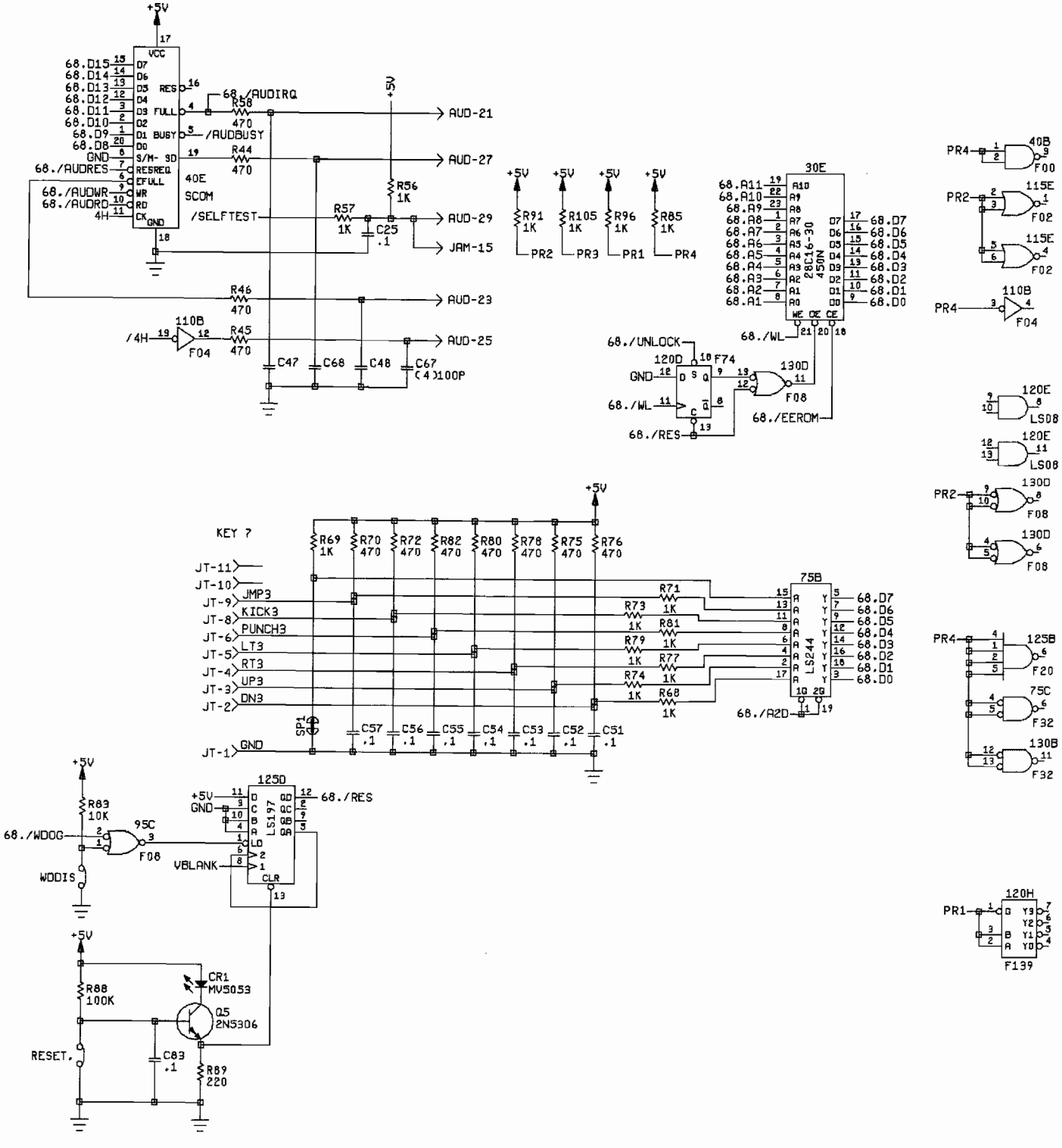

Figure 5-1 Pit-Fighter Game PCB Assembly Schematic Diagram

045977-01 F

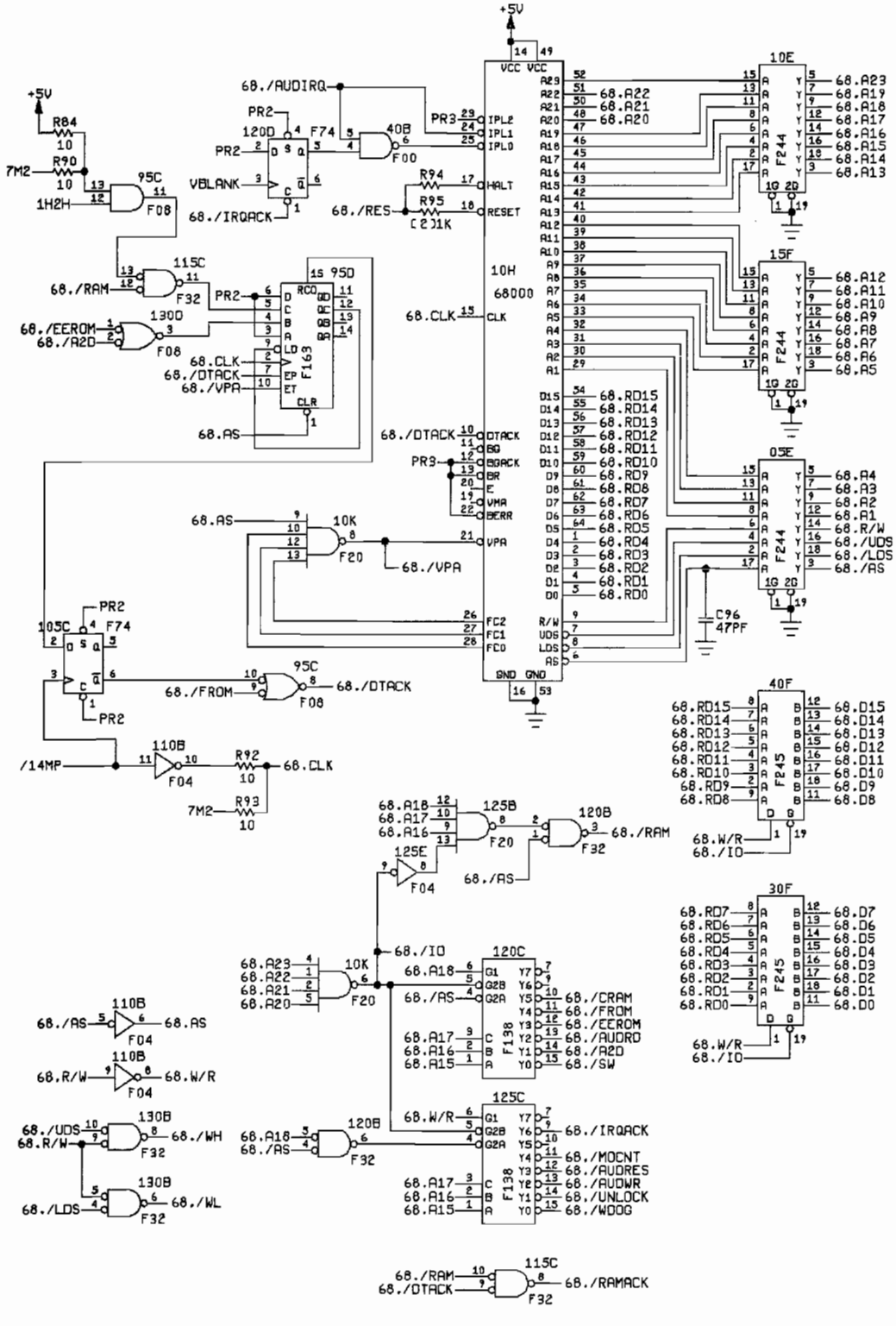
+5V
R84
10
R90
10
7M2
1H2H
95C
F08
68./AUDIRQ
PR2
120D
F74
40B
F00
PR3
VBLANK
68./IRQACK
R94
R95
68./RES
[2]1K
IPL2
IPL1
IPL0
HALT
RESET
10H
68000
68.CLK
CLK
115C
F32
68./RAM
130D
68./EEROM
68./A2D
95D
F163
68./DTACK
68./VPA
68.AS
DTACK
BG
BGACK
BR
E
VMA
BERR
VPA
FC2
FC1
FC0
R/W
UDS
LDS
AS
GND
10E
F244
15F
05E
68.A23
68.A19
68.A18
68.A17
68.A16
68.A15
68.A14
68.A13
68.A22
68.A21
68.A20
68.A12
68.A11
68.A10
68.A9
68.A8
68.A7
68.A6
68.A5
68.RD15
68.RD14
68.RD13
68.RD12
68.RD11
68.RD10
68.RD9
68.RD8
68.RD7
68.RD6
68.RD5
68.RD4
68.RD3
68.RD2
68.RD1
68.RD0
68.A4
68.A3
68.A2
68.A1
68.R/W
68./UDS
68./LDS
68./AS
C96
47PF
10K
F20
105C
68./FROM
68./DTACK
/14MP
110B
F04
R92
R93
40F
F245
68.D15
68.D14
68.D13
68.D12
68.D11
68.D10
68.D9
68.D8
68.W/R
68./IO
125B
120B
68./RAM
125E
30F
68.D7
68.D6
68.D5
68.D4
68.D3
68.D2
68.D1
68.D0
68./IO
120C
F138
68./CRAM
68./FROM
68./EEROM
68./AUDRD
68./A2D
68./SW
68./AS
68./R/W
68./UDS
68./WH
68./LDS
68./WL
125C
68./IRQACK
68./MOCNT
68./AUDRES
68./AUDWR
68./UNLOCK
68./WDOG
68./RAMACK

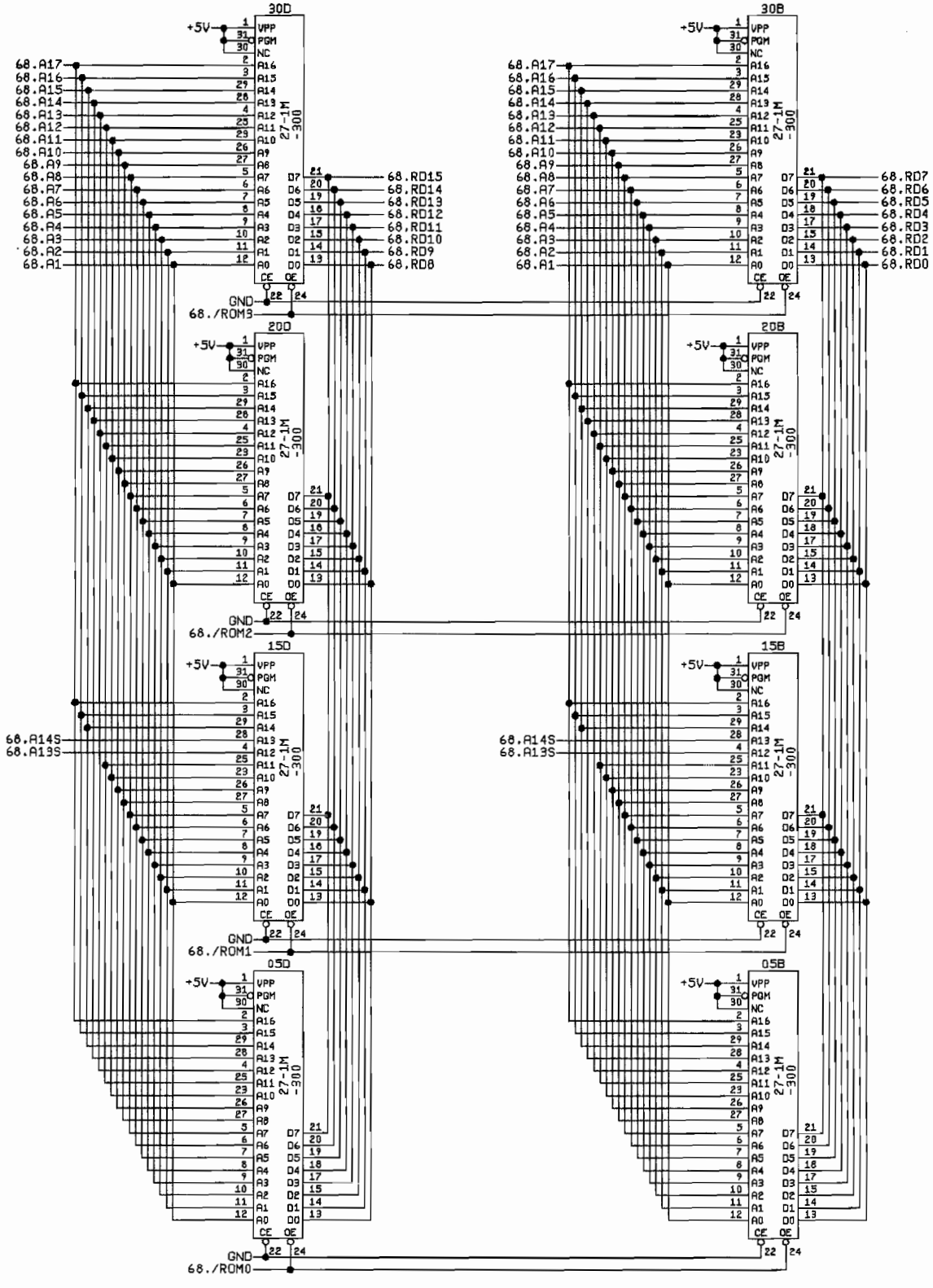

Figure 5-1 Pit-Fighter Game PCB Assembly Schematic Diagram

045977-01 F

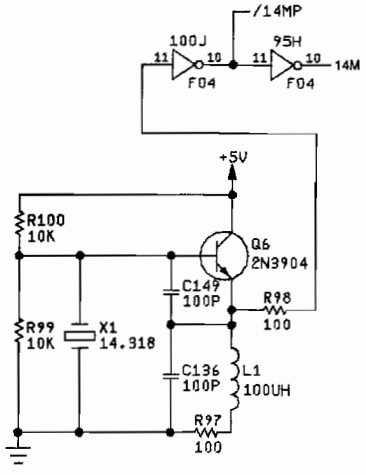
/14MP
100J
F04
95H
F04
14M
+5V
R100
10K
Q6
2N3904
C149
100P
R98
100
R99
10K
X1
14.318
C136
100P
L1
100UH
R97
100

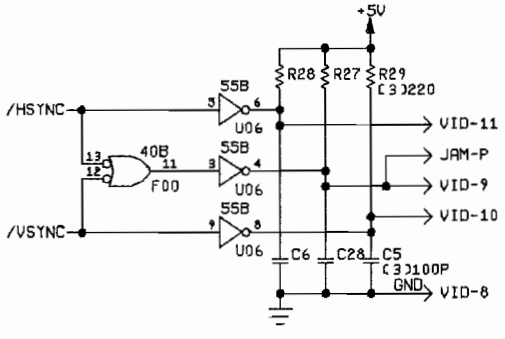
+5V
R28
R27
R29
330220
/HSYNC
/VSYNC
55B
U06
40B
F00
VID-11
JAM-P
VID-9
VID-10
C6
C28
C5
330100P
GND
VID-8

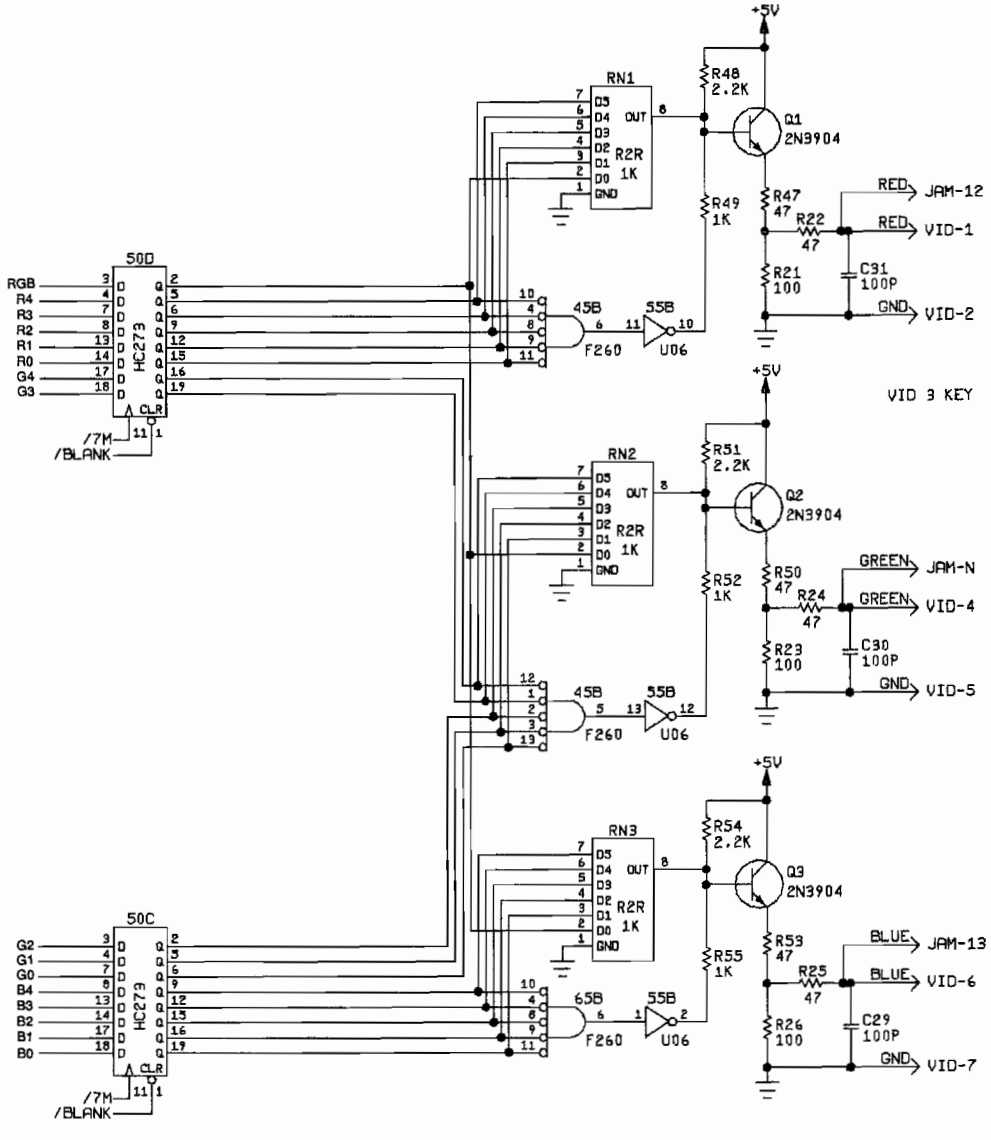

Figure 5-1 Pit-Fighter Game PCB Assembly Schematic Diagram

045977-01 F

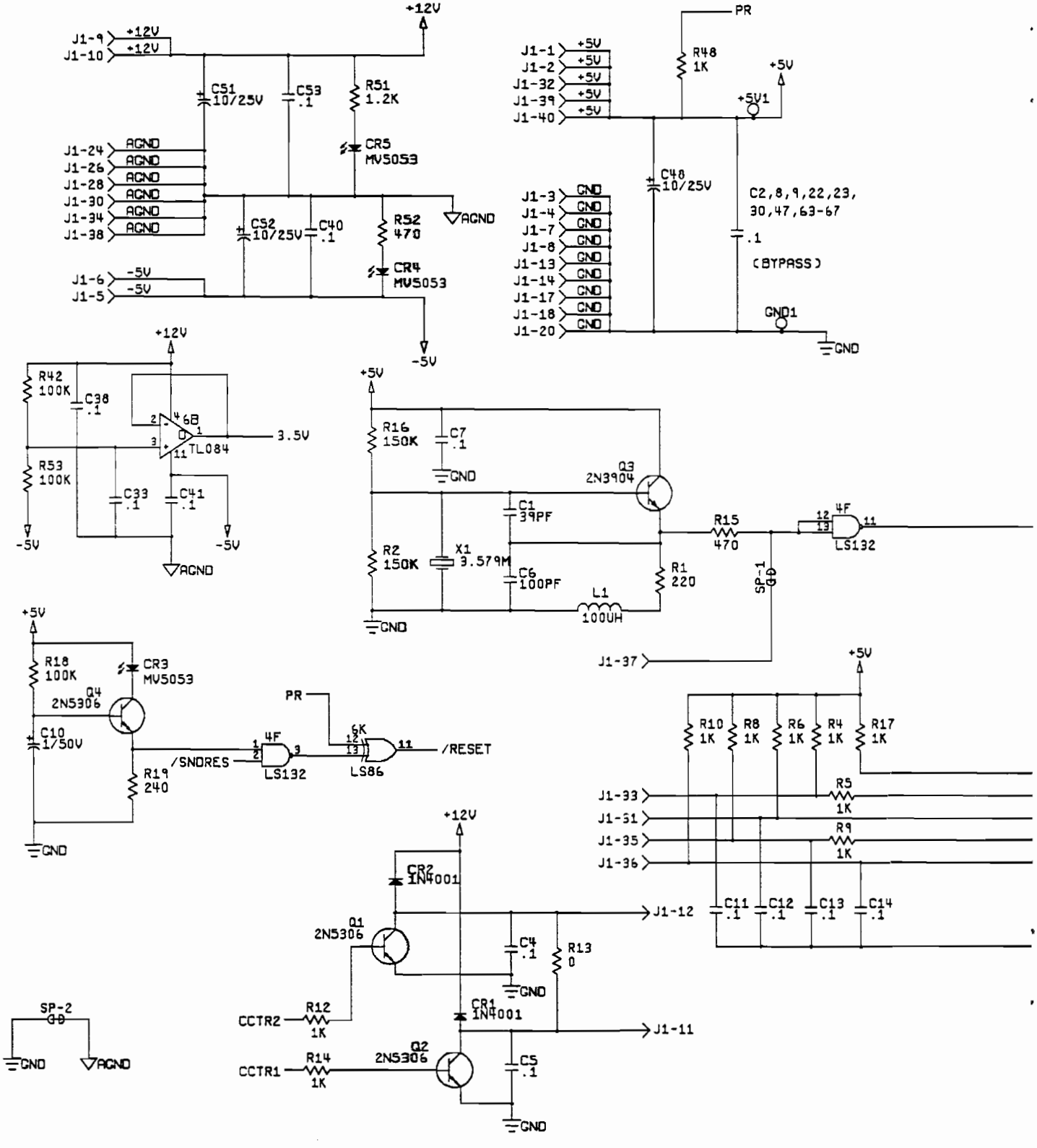
+12V
J1-9
J1-10
C51 10/25V
C53 .1
R51 1.2K
CR5 MV5053
J1-24 AGND
J1-26 AGND
J1-28 AGND
J1-30 AGND
J1-34 AGND
J1-38 AGND
C52 10/25V
C40 .1
R52 470
CR4 MV5053
AGND
J1-6 -5V
J1-5 -5V
-5V
PR
J1-1 +5V
J1-2 +5V
J1-32 +5V
J1-39 +5V
J1-40 +5V
R48 1K
+5V
+5V1
C48 10/25V
C2,8,9,22,23,
30,47,63-67
.1
(BYPASS)
J1-3 GND
J1-4 GND
J1-7 GND
J1-8 GND
J1-13 GND
J1-14 GND
J1-17 GND
J1-18 GND
J1-20 GND
GND1
GND
R42 100K
C38 .1
TL084
3.5V
R53 100K
C33 .1
C41 .1
R16 150K
C7 .1
Q3 2N3904
C1 39PF
R2 150K
X1 3.579M
C6 100PF
L1 100UH
R1 220
R15 470
LS132
SP-1
J1-37
R18 100K
CR3 MV5053
Q4 2N5306
C10 1/50V
R19 240
/SNORES
/RESET
LS86
R10 1K
R8 1K
R6 1K
R4 1K
R17 1K
R5 1K
R9 1K
J1-33
J1-31
J1-35
J1-36
C11 .1
C12 .1
C13 .1
C14 .1
CR2 1N4001
Q1 2N5306
J1-12
C4 .1
R13 0
CR1 1N4001
J1-11
R12 1K
CCTR2
R14 1K
CCTR1
Q2 2N5306
C5 .1
SP-2

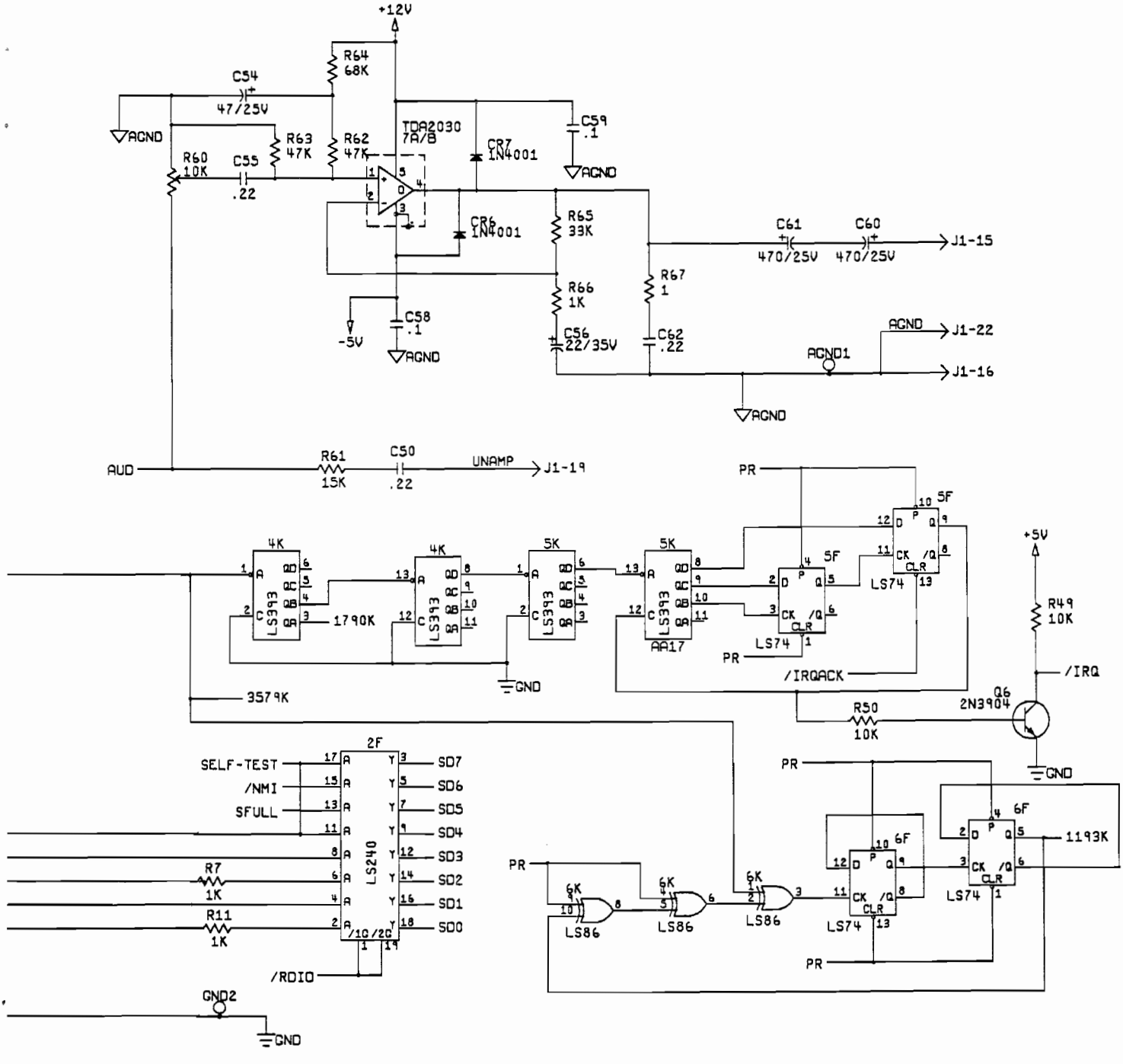

Figure 5-2 JSA Audio II PCB Assembly Schematic Diagram

046487-01 E

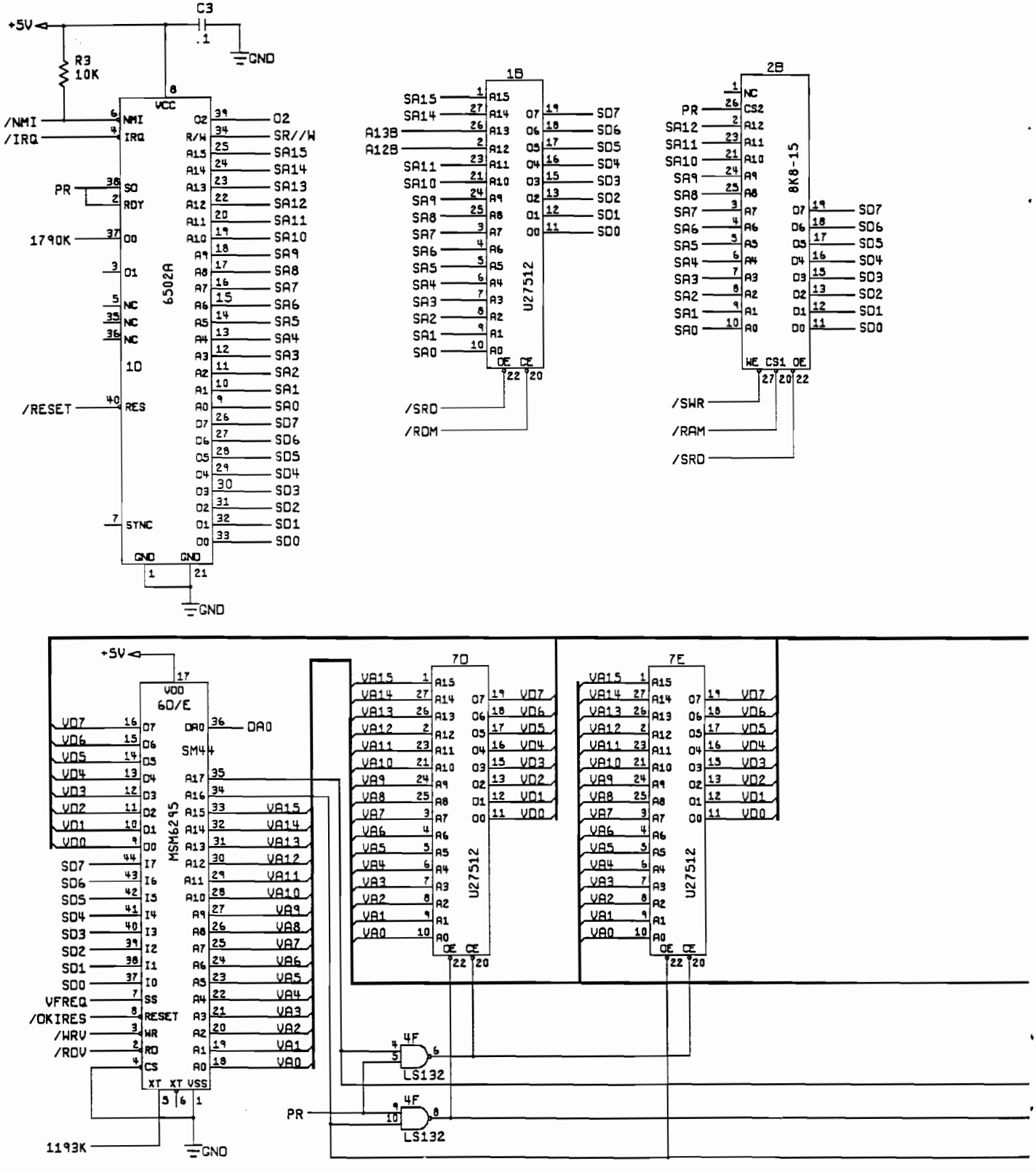
+5V
C3
.1
GND
R3
10K
/NMI
/IRQ
PR
1790K
/RESET
6502A
1D
VCC
NMI
IRQ
SO
RDY
O0
O1
NC
RES
STNC
GND
O2
R/W
SR//W
SA15
SA14
SA13
SA12
SA11
SA10
SA9
SA8
SA7
SA6
SA5
SA4
SA3
SA2
SA1
SA0
SD7
SD6
SD5
SD4
SD3
SD2
SD1
SD0
1B
U27512
A13B
A12B
/SRD
/ROM
2B
8K8-15
CS2
WE
CS1
OE
/SWR
/RAM
/SRD
6D/E
MSM6295
SM44
VDD
DA0
VFREQ
/OKIRES
/WRV
/RDV
RESET
WR
RD
CS
XT
VSS
1193K
7D
7E
VA15
VA14
VA13
VA12
VA11
VA10
VA9
VA8
VA7
VA6
VA5
VA4
VA3
VA2
VA1
VA0
4F
LS132

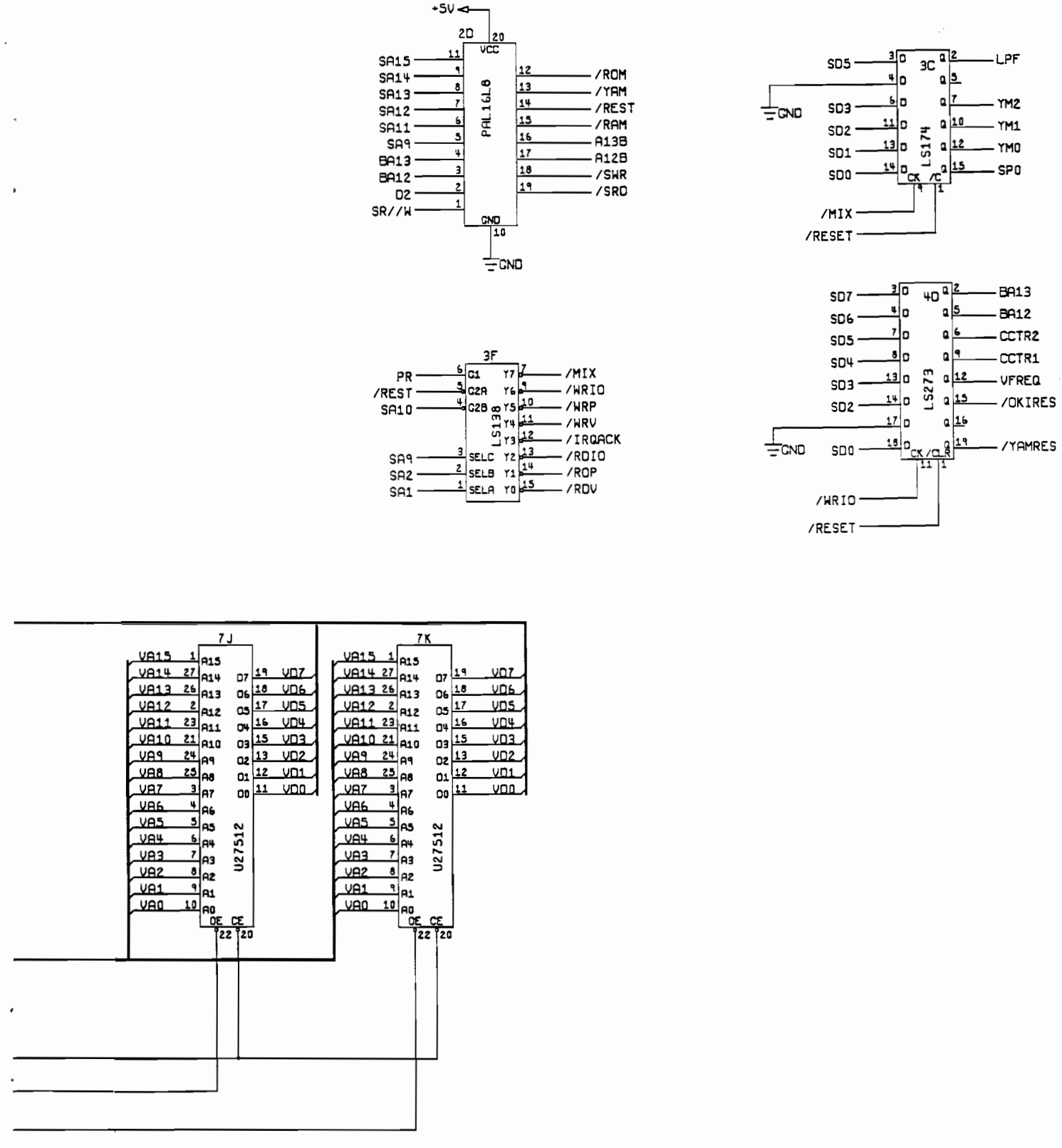

Figure 5-2 JSA Audio II PCB Assembly Schematic Diagram

046487-01 E

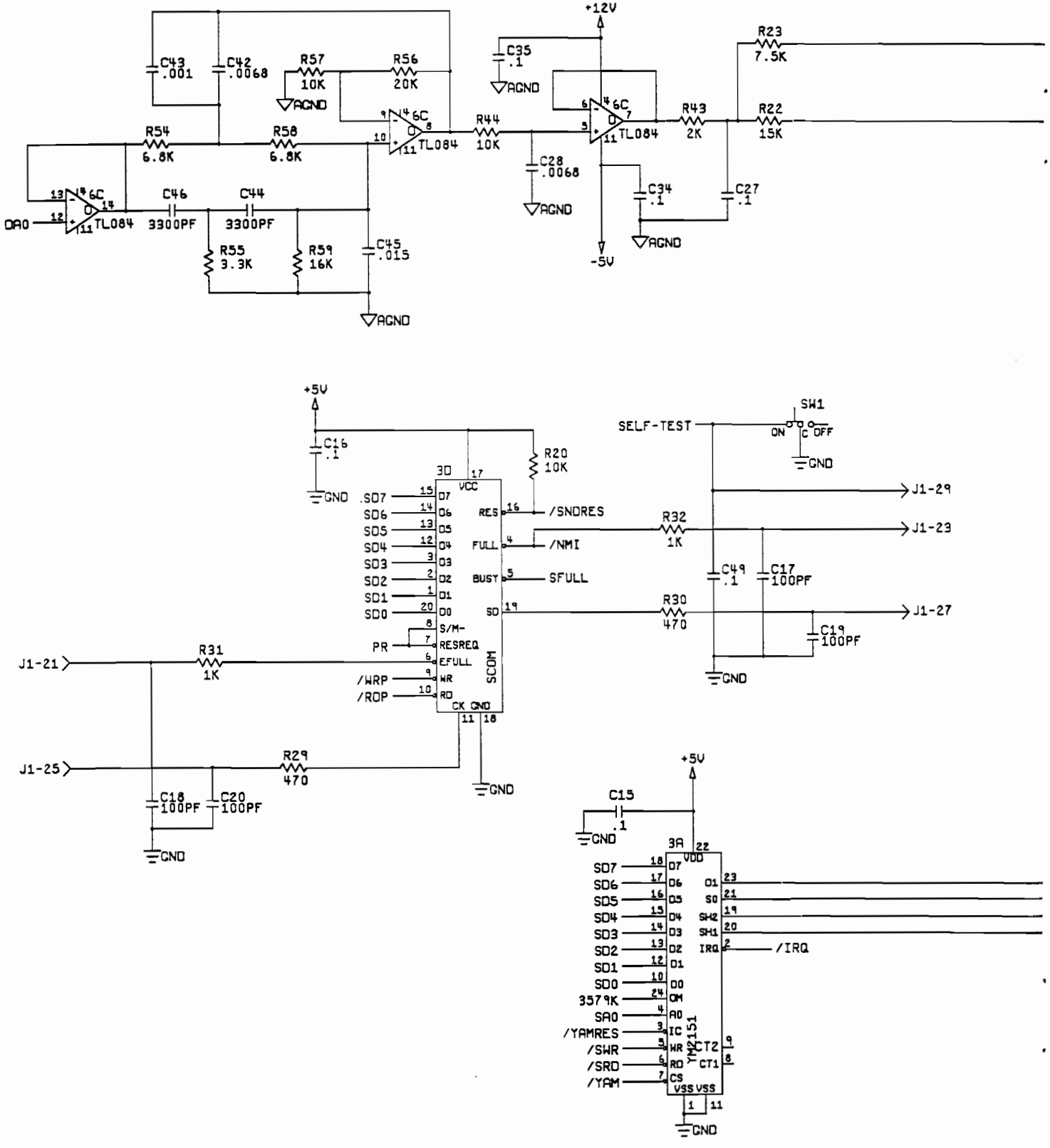
+12V
C43 .001
C42 .0068
R57 10K
R56 20K
AGND
C35 .1
AGND
R23 7.5K
R54 6.8K
R58 6.8K
TL084
R44 10K
C28 .0068
AGND
TL084
R43 2K
R22 15K
C34 .1
C27 .1
AGND
-5V
DA0
C46 3300PF
C44 3300PF
R55 3.3K
R59 16K
C45 .015
AGND
+5V
C16 .1
GND
R20 10K
SW1
SELF-TEST
ON
OFF
GND
J1-29
J1-23
J1-27
R32 1K
C49 .1
C17 100PF
R30 470
C19 100PF
GND
3D
VCC
SD7
SD6
SD5
SD4
SD3
SD2
SD1
SD0
RES
/SNDRES
FULL
/NMI
BUSY
SFULL
SD
S/M-
PR
RESREQ
EFULL
/WRP
WR
/RDP
RD
CK GND
SCOM
J1-21
R31 1K
J1-25
R29 470
C18 100PF
C20 100PF
GND
GND
+5V
C15 .1
GND
3A
VDD
SD7
SD6
SD5
SD4
SD3
SD2
SD1
SD0
3579K
SA0
/YAMRES
/SWR
/SRD
/YAM
D7
D6
D5
D4
D3
D2
D1
D0
OM
A0
IC
WR
RD
CS
VSS VSS
O1
SO
SH2
SH1
IRQ
/IRQ
CT2
CT1
YM2151
GND

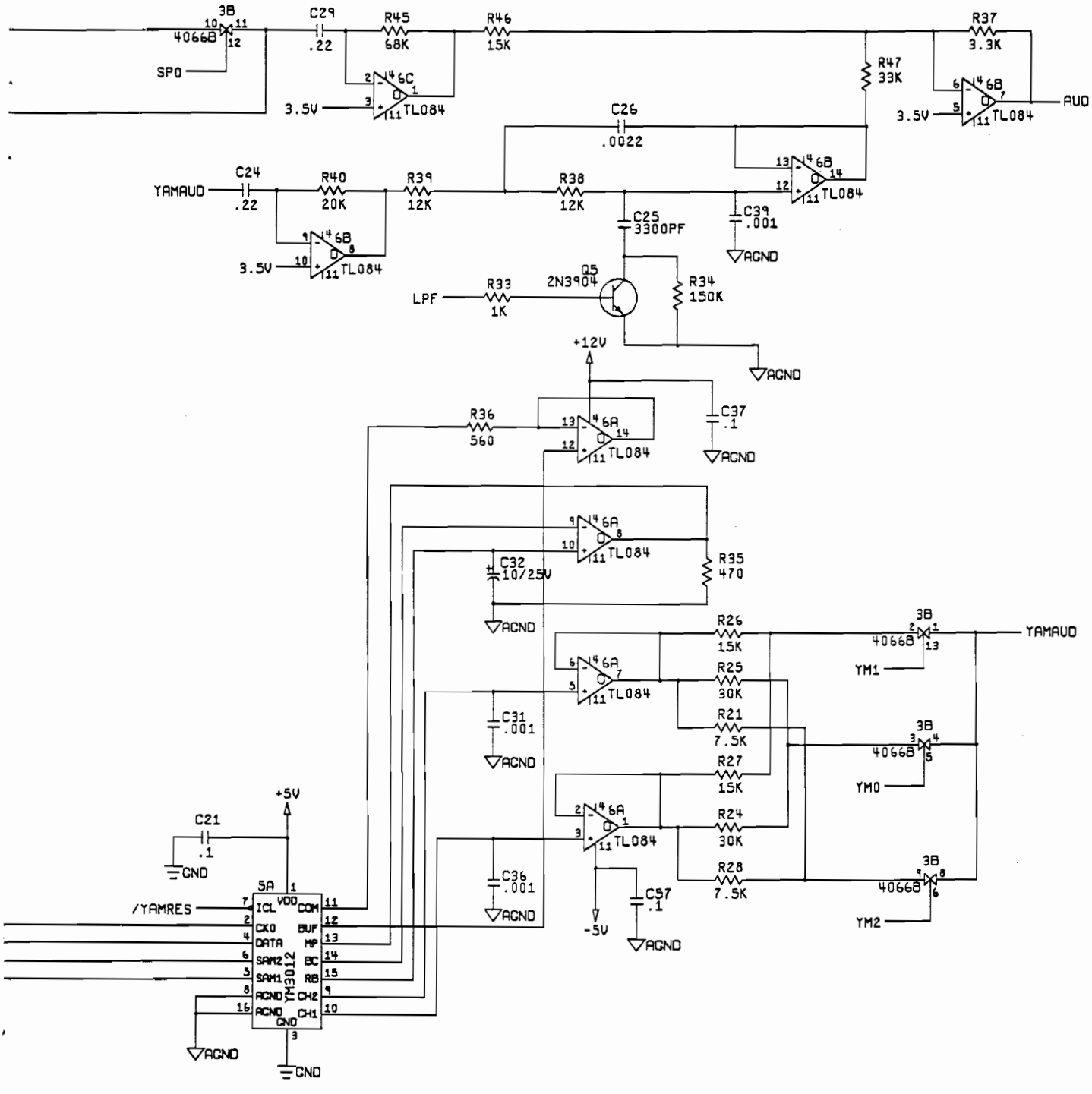

Figure 5-2 JSA Audio II PCB Assembly Schematic Diagram

046487-01 E

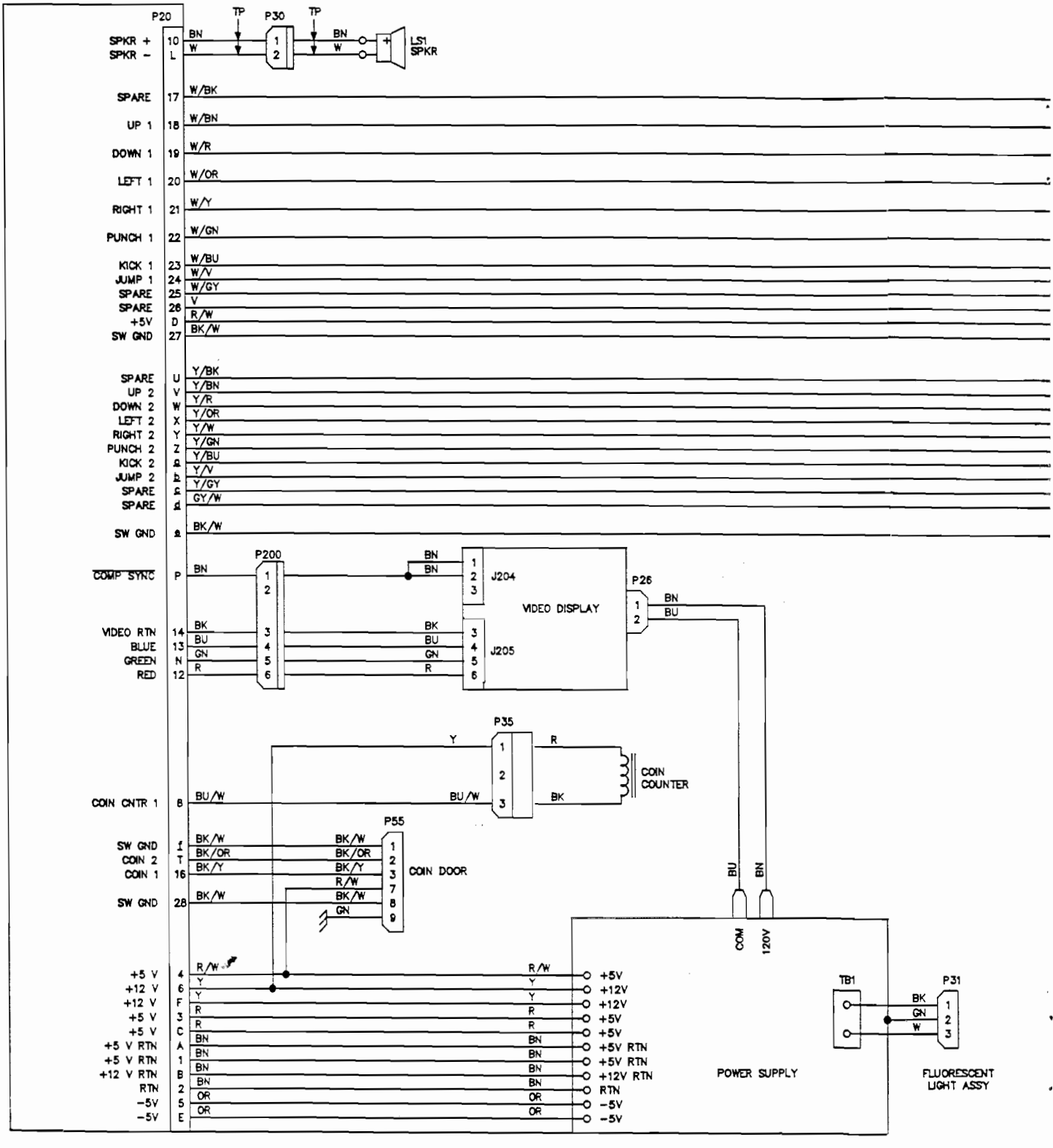
P20
SPKR +
SPKR –
SPARE
UP 1
DOWN 1
LEFT 1
RIGHT 1
PUNCH 1
KICK 1
JUMP 1
SPARE
SPARE
+5V
SW GND
SPARE
UP 2
DOWN 2
LEFT 2
RIGHT 2
PUNCH 2
KICK 2
JUMP 2
SPARE
SPARE
SW GND
COMP SYNC
VIDEO RTN
BLUE
GREEN
RED
COIN CNTR 1
SW GND
COIN 2
COIN 1
SW GND
+5 V
+12 V
+12 V
+5 V
+5 V
+5 V RTN
+5 V RTN
+12 V RTN
RTN
–5V
–5V
TP
P30
LS1
SPKR
P200
J204
J205
VIDEO DISPLAY
P26
P35
COIN
COUNTER
P55
COIN DOOR
COM
120V
TB1
P31
POWER SUPPLY
FLUORESCENT
LIGHT ASSY

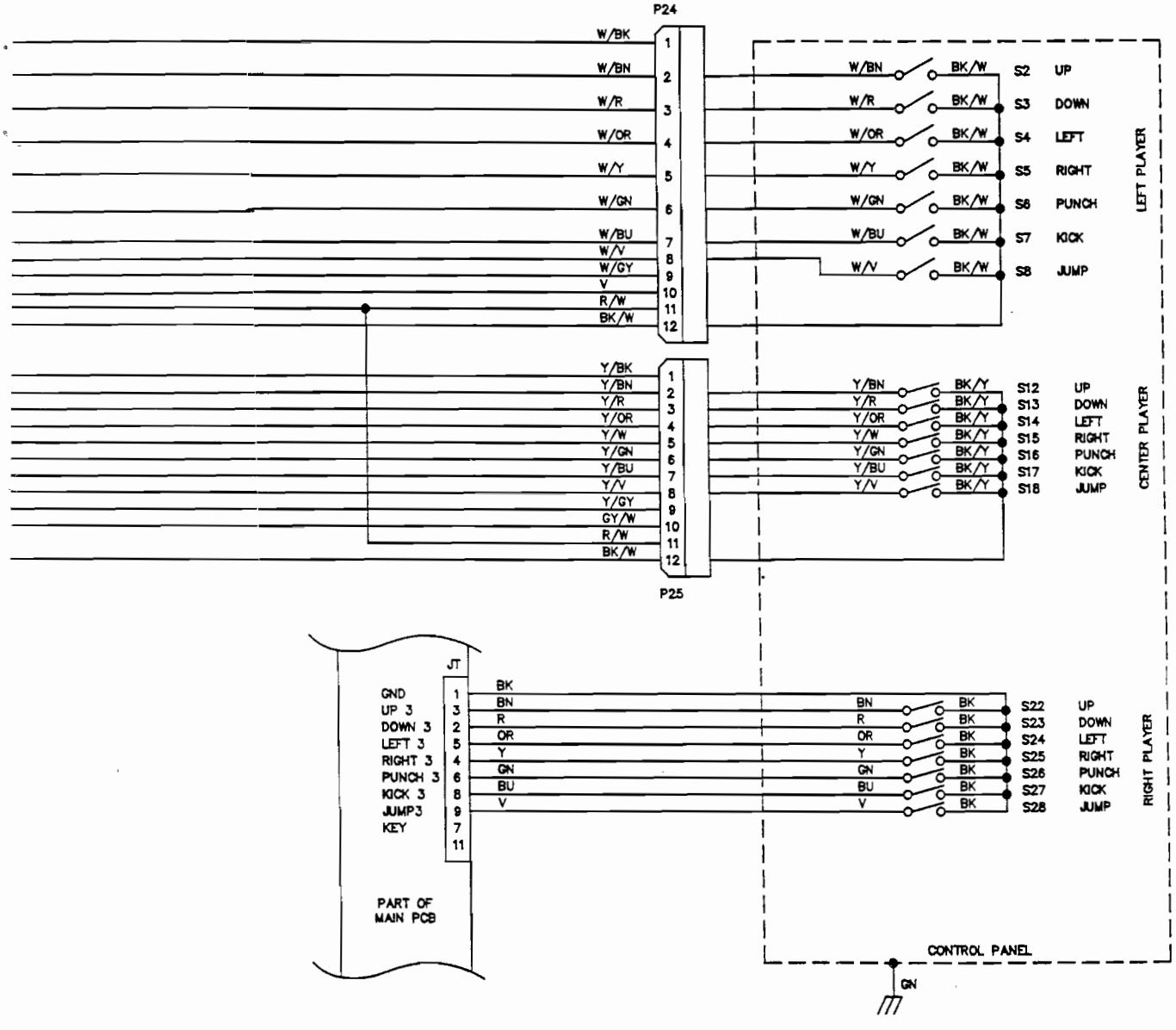

Figure 5-3 Game Wiring Diagram

048097-01 A

N O T E S

ATARI GAMES

Pit-Fighter™ Statistics Sheet

Date: _____ Location: _____

Statistics Screen

Left Coins:	_____
Right Coins:	_____
0 Player Minutes:	_____
1 Player Minutes:	_____
2 Player Minutes:	_____
3 Player Minutes:	_____
Sessions:	_____
New Games:	_____
Continued Games:	_____
New (Game) Mins:	_____
Cont. (Game) Mins:	_____
Error Count:	_____
Total Credits:	_____
Avg Time/Credit:	_____ sec
Avg Time/New Game:	_____ sec
Avg. Time/Cont. Game:	_____ sec

Histogram Screens

Histogram 1: New Games in Seconds		Histogram 2: Continuations in Seconds		Histogram 3: Sessions in Minutes	
0–39	_____	0–39	_____	0–2	_____
40–59	_____	40–59	_____	3–5	_____
60–79	_____	60–79	_____	6–8	_____
80–99	_____	80–99	_____	9–11	_____
100–119	_____	100–119	_____	12–14	_____
120–139	_____	120–139	_____	15–17	_____
140–159	_____	140–159	_____	18–20	_____
160–179	_____	160–179	_____	21–23	_____
180–199	_____	180–199	_____	24–26	_____
200–219	_____	200–219	_____	27–29	_____
220–239	_____	220–239	_____	30–32	_____
240–259	_____	240–259	_____	33–35	_____
260–279	_____	260–279	_____	36–38	_____
280–299	_____	280–299	_____	39–41	_____
300–319	_____	300–319	_____	42–44	_____
320–339	_____	320–339	_____	45–47	_____
340–359	_____	340–359	_____	48–50	_____
360–379	_____	360–379	_____	51–53	_____
380–399	_____	380–399	_____	54–56	_____
400 & up	_____	400 & up	_____	57 & up	_____

NOTES

ATARI®
GAMES



Atari Games Corporation

675 Sycamore Drive

P.O. Box 361110

Milpitas, CA 95036