
ATARI®
CLOAK™
&
DAGGER
™A trademark of Universal City Studios, Inc. and licensed by Merchandising Corporation of America, Inc.

INSTRUCTIONS

- Help Agent X recover the stolen plans and destroy Dr. Boom's subterranean bomb factory.
- Warning! Dr. Boom has placed explosive mines on every 4th floor.
- Each secret box  contains a map to help Agent X cross one-third of the minefield.
- Walk over  to receive an extra life.
- Use IGNITER to light center bomb for Bonus points.
- Hint–Bomb can only be lit at close range.
- Pulling both joysticks while in elevator will skip floors.
- Read messages in elevator for helpful hints.

CL&AK DAGGER™*

OPERATORS MANUAL WITH ILLUSTRATED PARTS LIST

CONFIDENTIAL

TOP SECRET

*A trademark of and licensed by Universal City Studios, Inc.

CLOAK & DAGGER™*

OPERATORS MANUAL WITH ILLUSTRATED PARTS LIST

*A trademark of and licensed by Universal City Studios, Inc.

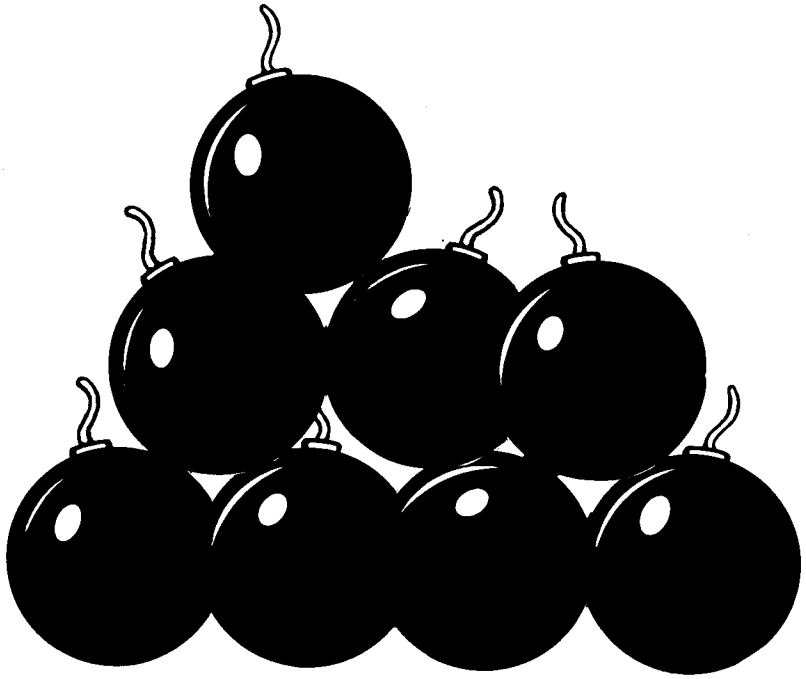

© 1983 by Atari, Inc. **All rights reserved.**

No part of this publication may be reproduced by any mechanical, photographic, or electronic process, or in the form of a phonographic recording, nor may it be stored in a retrieval system, transmitted, or otherwise copied for public or private use, without permission from the publisher.

The game play, all graphic designs, this technical manual, its accompanying schematic diagrams, and the display manual are protected by the U.S. Copyright Act of 1976.

This Act provides for increased penalties for violating federal copyright laws. Courts *can impound* infringing articles while legal action is pending. If infringers are convicted, courts can *order destruction* of the infringing articles.

In addition, the Act provides for payment of statutory damages of up to $250,000 in certain cases. Infringers may also have to pay costs and attorneys' fees and face an imprisonment of up to five years.

Atari will aggressively enforce its copyrights against any infringers. *We will use all legal means* to immediately halt any manufacture, distribution, or operation of a copy of video games made by us. Anyone who purchases such copies risks forfeiting such a game.

Published by: ATARI, INC.
790 Sycamore Drive
P.O. Box 906
Milpitas, California 95035

Printed in the U.S.A. **12M**

Notice Regarding Non-ATARI Parts

WARNING

Use of non-ATARI parts or modifications of any ATARI® game circuitry may adversely affect the safety of your game, and may cause injury to you and your players.

You may void the game warranty (printed on the inside back cover of this manual) if you do any of the following:

- Substitute non-ATARI parts in the game.
- Modify or alter any circuits in the game by using kits or parts *not* supplied by Atari.

NOTE

This equipment generates, uses, and can radiate radio frequency energy and if not installed and used in accordance with the instruction manual, may cause interference to radio communications. It has been tested and found to comply with the limits for a Class A computing device pursuant to Subpart J of Part 15 of Federal Communications Commission (FCC) Rules, which are designed to provide reasonable protection against such interference when operated in a commercial environment. Operation of this equipment in a residential area or modification to this equipment is likely to cause interference in which case the user, at his own expense, will be required to take whatever measures may be required to correct the interference. If you suspect interference from an ATARI® game at your location, check the following:

- All green ground wires in the game are properly connected as shown in the game wiring diagram.
- The power cord is properly plugged into a grounded three-wire outlet.
- The game printed-circuit boards (PCB) are properly installed within the Electromagnetic Interference (EMI) cage.
- The EMI Shield PCB is properly installed and connected in series with the game PCB harness.
- All filter capacitors required on the EMI Shield PCB are properly soldered in place.

If you are still unable to solve the interference problem, please contact ATARI Customer Service. See the inside front cover of this manual for service in your area.

Table of Contents

1 Set Up

How to Use This Manual 1-1
Game Overview 1-2
Option-Switch Location 1-2
Selecting the Coin and Credit Options 1-2
Game Play 1-3
Attract Mode 1-3
Play Mode 1-4
Hints for Game Play 1-4
High-Score Mode 1-5

2 Self Test

Self-Test Displays 2-2

3 Maintenance

Opening the Control Panel 3-2
Removing the Joystick Assembly 3-2
Disassembling the Joystick Assembly 3-2
Reassembling the Joystick Assembly 3-2
Removing the Joystick Leaf Switches 3-4
Adjusting the Joystick Leaf Switches 3-4
Pushbutton Leaf Switch 3-4
Start Switches 3-4

4 Illustrated Parts Lists

For a list of all illustrations in this manual, see the following page.

List of Illustrations

Figure 1-1 Option-Switch Location 1-2

Figure 2-1 Microprocessor and Looping Tests Display 2-3
Figure 2-2 Self-Test Menu Display 2-7
Figure 2-3 Color Bar Test Display 2-7
Figure 2-4 Option Menu Display 2-8
Figure 2-5 Statistics Summary Display 2-8

Figure 3-1 8-Position Joystick Assembly 3-3
Figure 3-2 Wire Connections to the Control Panel 3-5

Illustrated Parts Lists

Figure 4-1 CLOAK & DAGGER Retrofit Kit Contents for Defender 4-2
Figure 4-2 CLOAK & DAGGER Retrofit Kit Contents for Joust, Robotron: 2084, and Stargate 4-5
Figure 4-3 Control Panel Assembly 4-8
Figure 4-4 8-Position Joystick Assembly 4-10
Figure 4-5 Electromagnetic Interference (EMI) Cage Assemblies and PCB Mounting Hardware 4-12
Figure 4-6 EMI Shield PCB 4-14
Figure 4-7 CLOAK & DAGGER Master PCB Assembly 4-16
Figure 4-8 CLOAK & DAGGER Slave PCB Assembly 4-24

List of Tables

Table 1-1 Switch Settings for Coin and Credit Options 1-3
Table 1-2 Scoring 1-5

Table 2-1 Self-Test Screen Definitions 2-2
Table 2-2 LED Activity 2-4

Safety Summary

The following safety precautions apply to all game operators and service personnel. Specific warnings and cautions will be found throughout this manual where they apply.

⚠ WARNINGS ⚠

Properly Ground the Game. Players may receive an electrical shock if this game is not properly grounded! To avoid electrical shock, do not plug in the game until it has been inspected and properly grounded. This game should only be plugged into a grounded 3-wire outlet. If you have only a 2-wire outlet, we recommend you hire a licensed electrician to install a grounded outlet. Players may receive an electrical shock if the control panel is not properly grounded! After servicing any parts on the panel, check that the grounding clip is firmly secured to the metal tab on the inside of the control panel. Only then should you lock up the game.

AC Power Connection. Before connecting the game to the AC power source, verify that the proper voltage-selection plug is installed on the game's power supply.

Disconnect Power During Repairs. To avoid electrical shock, disconnect the game from the AC power source before removing or repairing any part of the game. When removing or repairing the video display, extra precautions must be taken to avoid electical shock because high voltages may exist within the display circuitry and cathode-ray tube (CRT) even after power has been disconnected. Do not touch internal parts of the display with your hands or metal objects! Always discharge the high voltage from the CRT before servicing this area of the game. To discharge the CRT: Attach one end of a large, well-insulated, 20-kV jumper to ground. Momentarily touch the free end of the grounded jumper to the anode by sliding it under the anode cap. Wait two minutes and discharge the anode again.

Use Only ATARI Parts. To maintain the safety integrity of your ATARI game, do not use non-ATARI parts when repairing the game. Use of non-ATARI parts or other modifications to the game circuitry may adversely affect the safety of your game, and injure you or your players.

Handle Fluorescent Tube and CRT With Care. If you drop a fluorescent tube or CRT and it breaks, it may implode! Shattered glass can fly six feet or more from the implosion.

Use the Proper Fuses. To avoid electrical shock, use replacement fuses which are specified in the parts list for this game. Replacement fuses must match those replaced in fuse type, voltage rating, and current rating. In addition, the fuse cover must be in place during game operation.

CAUTION

Properly Attach All Connectors. Make sure that the connectors on each printed-circuit board (PCB) are properly plugged in. Note that they are keyed to fit only one way. If they do not slip on easily, do not force them. A reversed connector may damage your game and void the warranty.

Set Up

WARNING

Shock Hazard

To avoid electrical shock, do not plug in the game until it has been inspected and properly set up for the line voltage in your area.

Do not touch internal parts of the display with your hands or metal objects!

How to Use This Manual

This manual, written for game operators and service technicians, describes your new Atari Cloak & Dagger game.

Chapter 1 contains a game overview, switch locations, and option information.

Chapter 2 contains self-test procedures.

Chapter 3 contains maintenance and repair procedures.

Chapter 4 contains illustrated parts lists. Notes in this chapter refer you to other places in the manual for more detailed information.

Schematic diagrams of the game circuitry are included as a supplement to this manual.

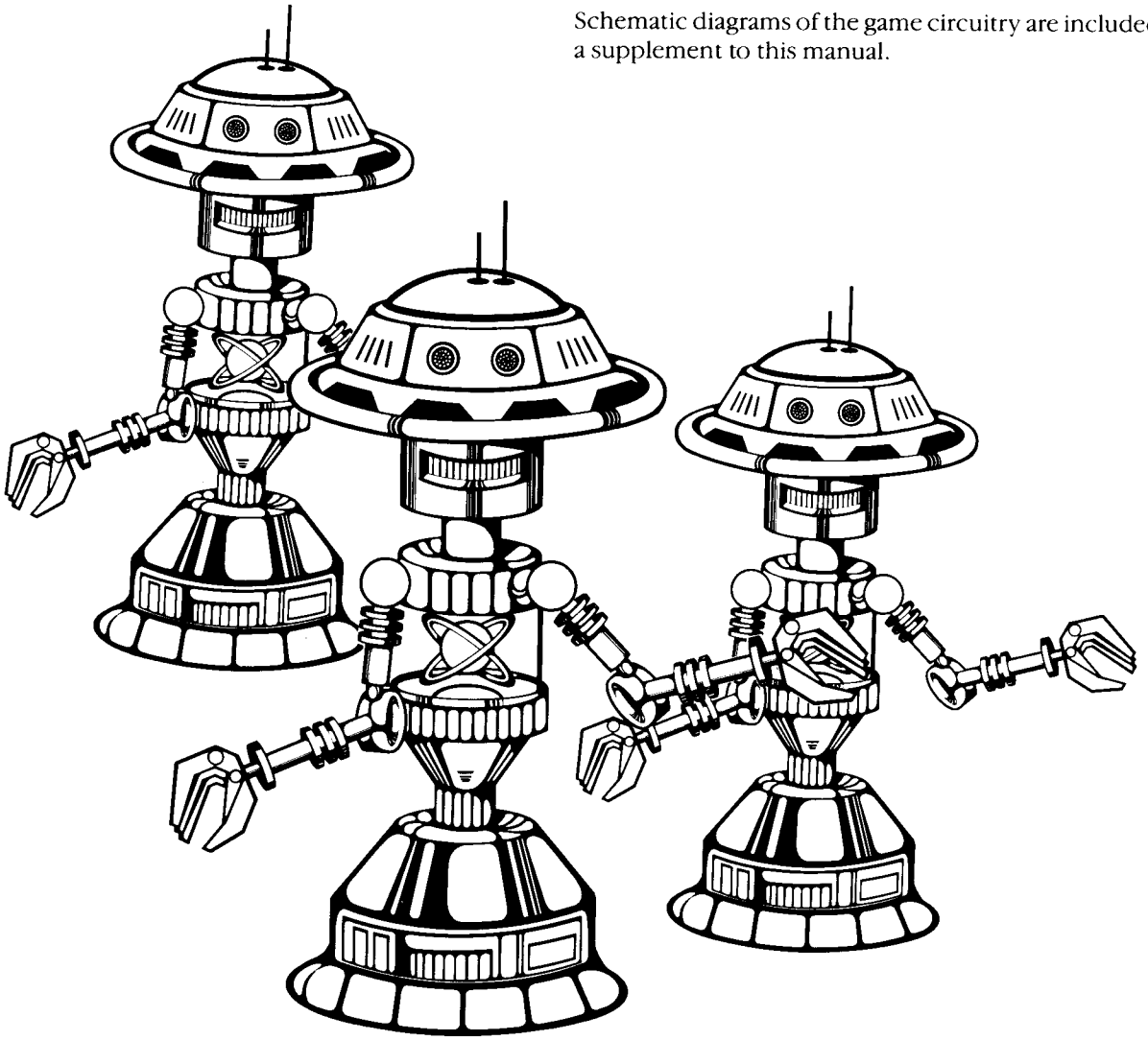

Chapter 1

Game Overview

Agent X™, complete with trenchcoat, Bogie hat, and briefcase, hurries through a series of adventures and misadventures to retrieve stolen plans and destroy dastardly Dr. Boom's subterranean bomb factory. Our masked hero descends to the depths of Dr. Boom's laboratory in a special elevator. On each floor he encounters a series of conveyor belts that are moving explosives. A giant bomb ticks down the game seconds while devices of Dr. Boom's plotting, such as bomb converters, forklifts deflecting shots back at Agent X, robot guards, acid pits, and crawling eyes shooting death rays, challenge the player(s).

⚠ WARNING ⚠

Shock Hazard

To avoid electrical shock, do not plug in the game until you have inspected the game.

This game should only be connected to a grounded 3-wire outlet. If you have only a 2-wire outlet, we recommend you hire a licensed electrician to install a grounded outlet. Players may receive an electrical shock if this game is not properly grounded!

Do not touch internal parts of the display with your hands or with metal objects!

Option-Switch Location

Figure 1-1 shows the location of the dual-inline-package (DIP) switch at 5A on the Master Printed-Circuit Board (PCB). This switch provides coin-option choices.

Selecting the Coin and Credit Options

Settings for the coin and credit options are listed in Table 1-1. Options preset at the factory are shown by the ◄ symbol; however, you may change the settings according to your needs.

Table 1-1 lists settings for the DIP switch at location 5A on the Master PCB. This switch is used to select coin and credit options available for the left and right coin mechanisms.

To verify other option selections, check the self-test display that appears in the Self-Test Mode as described in Chapter 2.

NOTE

The Self-Test Mode of CLOAK & DAGGER includes an options display that enables you to select game options. The option switches on the Master PCB are for coin options only. See Chapter 2 for more details.

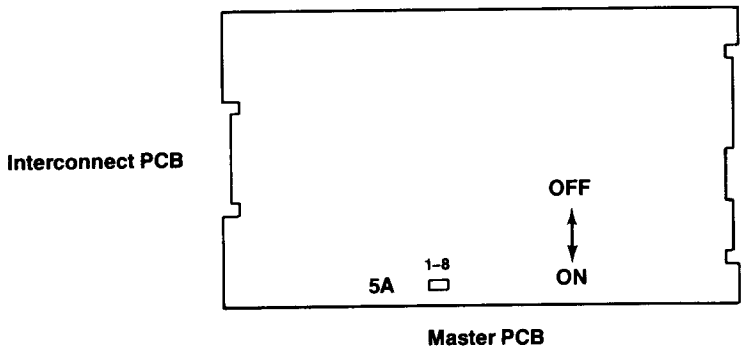

NOTE

ON and OFF directions will be reversed in the Defender Cabinet.

Figure 1-1 Option-Switch Location

Table 1-1 Switch Settings for Coin and Credit Options

Settings of 8-Toggle Switch on CLOAK AND DAGGER Master PCB *(at 5A)*								
1	2	3	4	5	6	7	8	Option
	On	Off						Demo Freeze Mode On
	Off	Off						Demo Freeze Mode Off◄
								Right Coin Mechanism
		Off	Off					1 Credit Added for 1 Coin◄
		Off	On					2 Credits Added for 1 Coin
Not used								**Left Coin Mechanism**
		Off		Off	Off			1 Credit Added for 1 Coin◄
		Off		Off	On			4 Credits Added for 1 Coin
		Off		On	Off			5 Credits Added for 1 Coin
		Off		On	On			6 Credits Added for 1 Coin
		Off				Off	Off	Free Play
		Off				On	Off	1 Credit Required for 1 Game (or 1 Player)◄
		Off				Off	On	1 Credit Required for 2 Games (or 2 Players)
		Off				On	On	2 Credits Required for 1 Game (or 1 Player)

◄*Manufacturer's recommended settings*

Game Play

CLOAK & DAGGER is a one- or two-player game with a color raster video display. You control Agent X as he descends underground floor by floor in an elevator to Dr. Boom's lab, located on the 33rd floor. Your main goal is to retrieve Top Secret plans that are surrounded by an electrical arc. To stop the electrical current, Agent X must shoot all the fiery nodes as he fights off robot guards.

As Agent X leaves the elevator on each floor, he must make his way carefully and quickly across the screen to another exit. Each floor displays a configuration of conveyor belts moving green unarmed and red armed explosives. Agent X can pick up the green explosives. The red explosives will explode on contact. Some floors have marauding robot guards, death-ray shooting crawling eyes, and acid pits.

Once Agent X has the top secret plans in hand, he must make his way back to the surface. If he exits on a floor that was bombed on the way down, he will find a massive crater protected by node monsters and the previously mentioned attackers. If he exits on a floor that was not bombed, a superguard will join the other attackers to challenge Agent X. On the final level, rumors are that he will meet the notorious Dr. Boom himself.

CLOAK & DAGGER has four possible modes of operation: Attract, Game Play, High-Score, and Self-Test.

Attract Mode

The Attract Mode begins when power is applied to the game, or when the Play, High-Score, or Self-Test Modes end. The Attract Mode ends either when a credit is entered and the game goes into Play Mode, or when the self-test switch is set to *on*.

The message *INSERT COIN* alternates with the message *GAME OVER* if the game has no credits. The message *PRESS PLAYER 1 (or 2) START* should flash if credits are present. The message *CREDITS: X* is displayed in the lower right corner of the screen. *ATARI 1983* appears in the lower left corner of the screen.

The first screen in the Attract Mode is the Scoring Screen. Agent X appears at the top left of the display walking back and forth on a moving conveyor belt while messages appear beneath the conveyor belt explaining the scoring for each target in the game.

Scoring Screen Text:

(1 of 5 coin messages)

MAP **MAP** **MAP**

STEP ON UNARMED EXPLOSIVES

FOR POINTS! (100 points)
SECRET MAPS TO NEXT MINEFIELD!
SHOOT EXPLOSIVES!
!!!EXTRA LIFE!!!

MYSTERY:

BONUS POINTS
SLOW SPEED. . .
DOUBLE SPEED!
X-LIFE!!!

ATARI 1983 **CREDITS: X**

If no credits are entered, the second screen in the Attract Mode displays sample game play, which varies. Screen 2 may show floors 1– 3, 5–7, or 9. Floors 4 and 8 are not shown.

The third screen in the Attract Mode is the high-score screen. The upper portion of the screen displays a table containing the ten all-time highest scores followed by a blue line. Initials and scores for the twenty next highest scores entered since the game was last turned on are listed under the blue line. The copyright message appears at the bottom left of the screen.

The game retains and displays the top ten scores achieved by players even if the power is turned *off* and then *on* again.

The fourth screen displayed in the Attract Mode is the logo screen. The *CLOAK & DAGGER* logo appears as Dr. Boom lobs a bomb at Agent X. The ampersand (&) appears in an explosion as Agent X fires at Dr. Boom.

Play Mode

The Play Mode begins when sufficient coins have been deposited in the game's coin mechanism to credit the game, and the 1-player or 2-player start button is pressed. This mode ends after the last life has been lost during game play or the player returns to the surface (end of game).

At the center of the display, a double-coiled fuse to a giant bomb is ticking down the game seconds for each level. Agent X can light the fuse in a rush for bonus points, but must be able to escape that level before the bomb explodes. If the fuse has shortened on its own to one coil, it lights automatically and prompts Agent X to make a mad dash to the waiting elevator. The doors close just as a burst of light from the explosion is seen. The game's perspective now changes to a full view inside the elevator. Messages flash across the elevator to give helpful hints on the next level.

Dr. Boom has placed explosive mines on every fourth floor. On each of the preceding three floors Agent X can pick up a secret map box that will show him part of the safe path across the minefield on the next fourth floor.

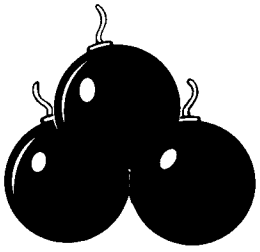



Agent X's first goal is to travel successfully from one elevator to the other; his second goal is to pick up a secret box to get a map of the minefield on levels 4, 8, 12, 16, 20, 24, 28, and 32; the third goal is to light the bomb fuse and escape before the explosion.

As game play progresses, Agent X may find an extra-life box and a mystery box that give bonus points, double speed, half speed, and occasionally, an extra life. Extra bonus points are earned for picking up green unarmed explosives or for skipping floors.

If Agent X succeeds in capturing the top secret plans, he must fight his way back up to the top level. The appearance of box compressors, crawling eyes, and other enemies are more random on the way up than on the way down. If Agent X makes it back to the surface, a free game will be awarded (depending on the settings of the option switches).

The game ends when you use up your last life or successfully make it to the surface. The words *GAME OVER* appear in the 2-player game only.

Hints for Game Play

- Develop skill for controlling the 8-position joysticks.
- Memorize the mine fields.
- Destroy the crawling eyes by spreading out shots.
- Judge timing through the box compressors that first appear on level 17.
- Learn levels where it is best NOT to shoot everything.

See Table 1-2 for a complete description of how points are scored in CLOAK & DAGGER.

Table 1-2 Scoring

Action	Points	Bonus Points
Shooting cave walls	1	None
Shooting unarmed explosives	10	None
Shooting armed explosives	50	100
Shooting sleeping guard	50	100
Picking up armed explosive	100	100
Shooting alert guard	200	100
Shooting lab arc-node	200	None
Picking up mystery box	200-1800	100
Shooting node monster	1000	100
Shooting crawling eye	1000	200
Shooting super-guard	2000	200
Shooting Dr. Boom	50,000	None
Picking up secret plans	100,000	None
Lighting fuse (the shorter the fuse the more points awarded)	0	2000–9000

Note: Once fuse is lit, all points awarded are doubled!

High-Score Mode

The High-Score Mode screen appears with the following alternating messages:

GAME OVER
INSERT COIN or PRESS PLAYER 1 (or 2) START

If a player ranks among the top 30 scorers, he will see the ten top players listed. Three blue boxes for entering initials appear on the display. A green alphabet is located beneath the boxes. The player uses the left joystick to select an initial and the IGNITER pushbutton to set that initial in a box or to rub out an initial.

The message *PLAYER 1 (or 2) RANKING: (1-30 or NOT IN TOP 30)* appears at the bottom of the screen.

If player is not in the top 30 scorers group, the High-Score Mode screen contains the same picture used in the Attract Mode to display the high scores with the added message: *PLAYER 1 (or 2) NOT IN TOP 30.*

Self Test

This game will test itself and provide data to show that the game circuitry and controls are operating properly. Self-test data is presented visually on the video display and audibly through the speakers. No additional equipment is required.

We suggest you perform a self-test when you first set up, each time you collect money, change the game options, or suspect game failure.

Chapter 2

To enter the self-test mode, turn *on* the self-test switch. The self-test switch is located on the utility panel of ATARI-built games. On converted games not originally manufactured by ATARI, the self-test switch is the locking spring-loaded pushbutton switch located on the game coin door. This switch is labeled AUTO-UP, MANUAL DOWN. To exit the self-test mode, press the switch down into its locked position.

NOTE

Self-test will not start during game play or during the game-play section of the attract mode.

Self-Test Displays

When the self-test switch is turned *on,* the screen displays part of the RAM test (approximately five different screens) for a few seconds. Figure 2-1 shows the screen that appears when the RAM tests and master microprocessor tests are successfully completed.

NOTE

CLOAK & DAGGER contains two microprocessors that are referred to in the self test as *master* and *slave*. All test results on the screen come from the master microprocessor. The master microprocessor performs its own self test before trying to send or receive messages from the slave microprocessor. If the master microprocessor fails any part of its self test, the slave microprocessor cannot perform its self test.

If the master microprocessor performs its self tests successfully, but cannot send to or receive messages from the slave microprocessor during the SLAVE COM test, no slave self-test results appear on the screen. In that case, the game begins a series of looping tests.

Once the looping tests begin, enter the self-test menu by turning off the self-test switch. The EXIT function on this menu returns the game to normal game play.

When self test starts, the following tests are performed in order. The results appear on the screen. See the text following Table 2-2 for further explanations of each test.

Table 2-1 Self-Test Screen Definitions

Screen Message	Definition
MASTER RAM	Checks specific addresses in the master microprocessor main memory.
MASTER ROM	Computes the checksums for all of the master program EPROM integrated circuits.
MOTION RAM	Checks specific addresses in the master microprocessor main memory.
EAROM PARITY	Checks parity of the two option areas that store game options.
MASTER INT	Checks the master microprocessor for interrupts and VBLANK activity.
SLAVE COM	Checks operations and interface circuitry of the slave microprocessor.
SLAVE RAM	Checks specific addresses in the slave microprocessor memory.
SLAVE ROM	Computes the checksums for all of the slave program EPROM integrated circuits.
SLAVE INT	Checks that the slave microprocessor is receiving interrupts.
BITMAP RAM	Tests the slave microprocessor RAM buffers.
SHARED RAM	Checks the clock-stretching and priority-access circuitry used by the communications RAM.
(The following messages refer to the looping tests for switches.)	
OPT SWTCHS	Checks the option switch at position 5A on the Master PCB.
PLA SWTCHS	Checks the 1-player and 2-player start switches.
DIR SWTCHS	Checks bits for VBLANK and IGNITER, coin, and self-test switches.
JOYSTICKS	Checks the movement of both joysticks.
SOUND NUM	Displays the index of the sound or music currently playing.

If the display screen is blank after the self-test switch is turned *on,* the two light-emitting diode (LED) switches on the control panel (1-player start and 2-player start) may be used to check the progress of the self-test routine. Neither LED should light up until pressed during the looping tests, although both LEDs flash on briefly when the self test is first entered. If LED activity does not occur at the start of self test, see Table 2-2.

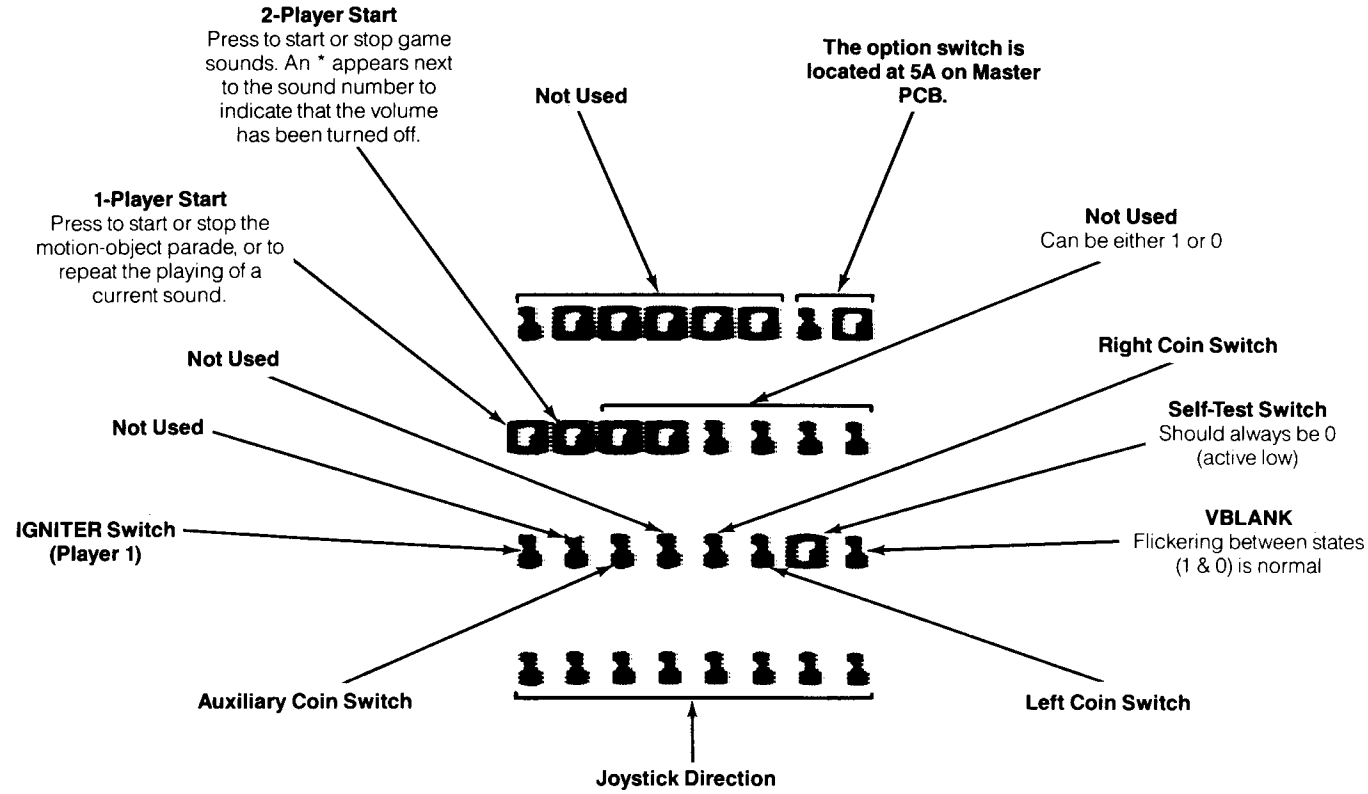

Looping Test Toggle Switches

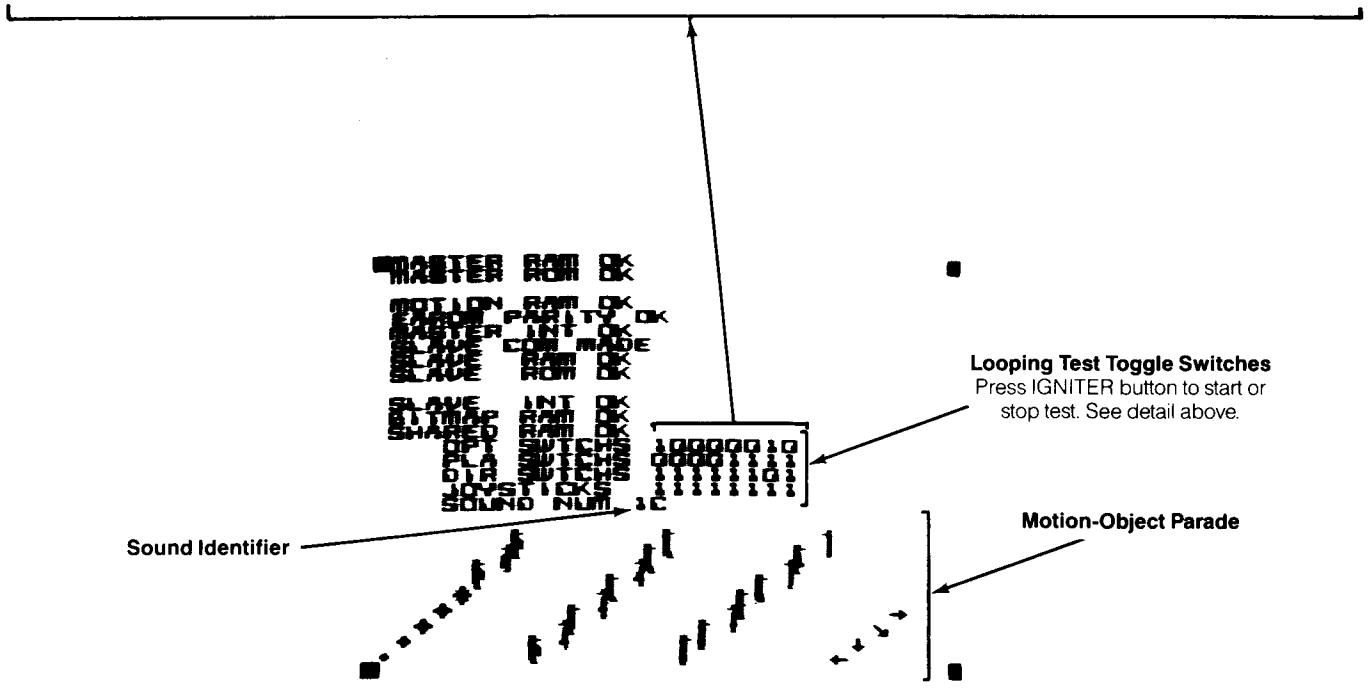

Figure 2-1 Microprocessor and Looping Tests Display

Table 2-2 LED Activity

LED Activity	Meaning
1-player LED on	If the display screen is blank, suspect a possible playfield-stamp RAM failure, cathode-ray tube failure, or an inability to clear the bit-map RAM.
Both LEDs on	The game did not start the self test—probably due to no clock or a PCB failure. Check the power-on reset circuit.
2-player LED off; 1-player LED on	Indicates that the self-test routine found an error in the master RAM.
Both LEDs off	If the screen is not usable, the self test is probably running, but cannot write to the playfield-stamp RAM. If you hear the sounds start in 15-20 seconds, the entire self-test routine has run correctly; it just could not report its results to the screen.

MASTER RAM Test

The MASTER RAM test checks the master microprocessor main memory from hexadecimal locations 0000 through 0FFF. If the MASTER RAM test fails, the screen displays the following message to show the bad integrated circuit (IC) on the Master printed-circuit board (PCB):

MASTER RAM BAD; LOC 4L-M

The *LOC* on the screen means location; 4L-M is the location of the defective IC.

If an error occurs during this test, no further tests are performed. If the MASTER RAM test passes, all master microprocessor tests are performed whether or not they pass.

MASTER ROM Test

NOTE

For proper results in this test, bit 3 of the option switch at location 5A on the Master PCB should always be OFF.

The MASTER ROM test computes the checksums for every master program EPROM IC. If a checksum is not correct for the IC under test, the screen displays the following message to show the location of any faulty IC on the Master PCB:

MASTER ROM BAD; LOCS: 2D;2F;2H-J;2K

2D, 2F, 2H-J, and *2K* are the locations of the master program memory ICs.

NOTE

If an error occurs during this test, the master microprocessor continues to perform the remaining tests. However, if the IC at location 2K is bad, all self-test results may be wrong because this is the IC that contains the self-test program!

MOTION RAM Test

The MOTION RAM test is exactly like the MASTER RAM test described previously, except that the hexadecimal locations of the area under test are from 3000 to 30FF.

If an error occurs during this test, the screen displays the following message to show the bad IC on the Master PCB:

MOTION RAM BAD; LOC nn

The *nn* is 6L or 6M—the location of the defective IC.

If an error occurs during this test, the master microprocessor continues to perform the remaining tests with valid results.

NOTE

If there are errors in the motion-object RAM, the motion-object parade displayed during the looping tests will probably look wrong.

EAROM PARITY Test

The EAROM PARITY test checks the parity of the two areas in the EAROM memory that store the game options. These options are important to the game play, so two sets of options and vertical parity checksums are stored in the EAROM. If either checksum is wrong, the screen displays the following message:

EAROM PARITY ?? LOC 3J-K

3J-K is the location of the bad IC.

NOTE

?? means the EAROM may be bad. Unlike the RAM and PROM, there is no way to tell for certain that the EAROM is bad. This error is caused by either a bad IC or a failure of the EAROM write/enable circuitry. If replacing the EAROM does not fix the problem, the error is probably in the enable circuit. In this case you should call your Atari Field Service office for further help.

If an error occurs during this test, the master microprocessor continues to perform the remaining tests with valid results.

MASTER INTerrupt Test

The MASTER INTerrupt test checks to see if the master microprocessor is receiving interrupts every 4 ms. It also checks to see that the VBLANK line is active every 4 interrupts (every 16 ms). If either interrupt test fails, the screen displays the following error message:

MASTER INT BAD

NOTE

If this error occurs, the master microprocessor continues through the rest of the tests, but the screens shown during the looping test may not be correct.

SLAVE COMmunications Test

The SLAVE COMmunications test checks to see if the slave microprocessor can transfer a message from one area to another in the communications RAM. The master microprocessor then verifies that the slave microprocessor performed that transfer correctly. The communications RAM is located between hexadecimal addresses 0800 and 0FFF. If this test fails, the screen displays the following message:

SLAVE COM BAD

This error may mean one of two things:

1. The slave microprocessor is not operating, or
2. The interface circuitry that the slave microprocessor uses to talk with the communications RAM is not working.

Check the LED mounted on the Slave PCB. If the LED is not flickering, the slave microprocessor is not operating. If the LED is flickering, the slave microprocessor is operating but the interface circuitry to the communications RAM is not working.

If the SLAVE COM test passes, the master microprocessor waits for all the following test results from the slave microprocessor. If the slave fails to respond within a fixed time for each test, the results of the SLAVE COM test are changed from *SLAVE COM MADE* to *SLAVE COM FAILED,* and the rest of the slave tests (SLAVE RAM, SLAVE ROM, BITMAP RAM, SHARED RAM, and SLAVE INT tests) are skipped. The self-test routine goes straight to the looping tests.

SLAVE RAM Test

The SLAVE RAM test is just like the MASTER RAM test described previously, except that the slave microprocessor memory (hexadecimal locations 0000-0FFF) is now tested. Note that this includes the communications RAM, which has already been partially tested.

If an error occurs during this test, the screen displays the following message showing the bad IC on the Slave PCB:

SLAVE RAM BAD; LOC ID

ID is the location of the defective IC.

The slave microprocessor tries to perform the rest of the tests even if an error occurs in the SLAVE RAM test. In case of error, *do not trust* the results of any remaining slave tests.

If the master microprocessor does not receive the results of this test from the slave after about 2 seconds, it changes the results of the SLAVE COM test from *SLAVE COM MADE* to *SLAVE COM FAILED* and skips all remaining tests involving the slave microprocessor.

SLAVE ROM Test

NOTE

To properly run this test, toggle 3 of the option switch at location 5A on the Master PCB must be OFF.

The SLAVE ROM test computes the checksums for every slave program EPROM IC. If any checksum is not right for the IC under test, the screen displays the following message:

SLAVE ROM BAD; LOCS: 1E-F;1F-H;1J;1K;1L;1M;1N

1E-F, 1F-H, 1J, 1K, 1L, 1M, and *1N* are the locations of all slave program memory devices. Only the bad slave memory devices are displayed.

NOTE

If an error occurs during this test, the slave microprocessor continues to perform the remaining tests. The IC at location 1N contains the self-test program. If the IC at location 1N is defective, all remaining slave self-test results may be wrong.

SLAVE INTerrupt Test

The SLAVE INTerrupt test checks if the slave microprocessor is receiving interrupts. If no interrupts are received within 2 seconds (they should occur every 16 ms), the screen displays the following error message:

SLAVE INT BAD

NOTE

The slave microprocessor continues to perform the rest of the tests even if this test fails, but the next test may not be valid.

If the master microprocessor does not receive the results of this test from the slave microprocessor after about 3 seconds, it changes the results of the SLAVE COM test from *SLAVE COM MADE* to *SLAVE COM FAILED.* The master microprocessor then skips the rest of the tests involving the slave microprocessor.

BITMAP RAM Test

The slave microprocessor tests the bitmap RAM. The BITMAP RAM test takes about 8 seconds. During this test, the screen changes color three times—from brown to green to tan. Two separate bitmap buffers used by the slave microprocessor are each checked during this test. If an error occurs, the screen displays one of the following messages:

BITMAP READ ERROR; BIT n

n is the bit between 7 and 3 that is normally tied to ground; but is detected at a high level during a reading of the bitmap.

BITMAP BAD; LOC nnn

nnn is the location of the first IC in which a read or write error is found by the slave microprocessor. Only the *first* bad IC location found is listed on the screen.

nnn is one of the following IC locations on the slave PCB:

- 7A through 7F
- 8A through 8F
- 9A through 9F
- 10A through 10F

If the master microprocessor does not receive the results of this test from the slave microprocessor after about 16 seconds, it changes the results of the SLAVE COM test from *SLAVE COM MADE* to *SLAVE COM FAILED* and skips all remaining tests involving the slave.

SHARED RAM Test

Both microprocessors test the communications RAM at the same time. They check the clock-stretching and priority-access circuitry used by this RAM. This test is done only when four conditions are met:

1. The slave microprocessor is operating.
2. The master microprocessor is operating.
3. The slave microprocessor indicates that the shared communications RAM is good.
4. The master microprocessor indicates that the shared communications RAM is good.

If an error is detected, the screen displays one or two of the following messages (depending on which microprocessor detects the error):

SHARED RAM BAD; LOC 1D-E, M

SHARED RAM BAD; LOC 1D-E, S

1D-E is the location of the communications RAM IC on the Master PCB.

NOTE

If an error occurs here, it is not due to a faulty RAM IC; but is caused by the surrounding circuitry.

S means the results came from the slave microprocessor on the Slave PCB. *M* means the results came from the master microprocessor on the Master PCB.

Even if an error is detected, both microprocessors continue with the looping tests. If the master microprocessor still does not receive the results of this test from the slave within about 2 seconds, it will change the results of the SLAVE COM test from *SLAVE COM MADE* to *SLAVE COM FAILED.*

LOOPING TESTS

Once all of the main diagnostic tests are performed, the self-test routine continues to perform a series of tests until the self-test switch is turned off. These tests include the following:

- Reading the joysticks
- Reading the switches and coin mechanisms
- Reading the option switch block
- Outputting all sounds and music
- Testing the start switches and LED
- Moving all motion objects
- Testing all possible bit-map store variations
- Changing the colors of a set of stamps positioned at each corner of the screen.

NOTE

The stamps in each corner of the screen can be used to adjust both the horizontal and vertical size as well as the centering of the video display.

Looping Test Toggles

The bit-map looping test starts and stops by pressing the IGNITER button.

The motion-object parade starts and stops with the 1-player start switch. This also causes the repeat playing of any current sound.

The sounds start and stop by pressing the 2-player start switch. Note that any sound in progress finishes before the sounds stop. An asterisk (*) appears next to the sound number to indicate that the sound has been turned off.

Switches and Joysticks

During the looping tests all switches and the two joysticks are tested continuously. They report the following three types of switch-input results to the screen:

1. *OPT SWTCHS.* The option switch is located at position 5A on the Master PCB. Toggles 1 through 8 are set at the factory as follows (1 is on; 0 is off):

   Bits 1-6 = 0

   Bit 7 = 1

   Bit 8 = 0

2. *PLA SWTCHS.* The two start switches are read separately. These switches are as follows (from left to right):

   1-player start

   2-player start

   The remaining 6 bits are not used and can be either a 0 or a 1. Bits 1 and 2 are normally 0 and become 1 when the appropriate start switch is pressed (active high).

3. *DIR SWTCHS.* This row of digits represents the rest of the switches that are read directly through the hardware. These switches are as follows (from left to right):

   IGNITER switch (player 1)

   IGNITER switch (player 2—not used)

   COIN AUX switch (ADVANCE switch on coin door)

   COCKTAIL cabinet (not used)

   RIGHT COIN switch

   LEFT COIN switch

   SELF-TEST switch

   VBLANK

The bit used for VBLANK sometimes flickers between states on the screen. It may show up as either a zero or a one (this is normal). The bit used for the self-test switch should always be zero (active low because the game is using its diagnostics).

Test the start switches and each LED by pressing the switches and observing the corresponding LED. The LED is bad if the corresponding PLA SWTCHS bit on the screen toggles with the switch. The switch is bad if neither the LED nor the PLA SWTCHS bit on the screen changes.

SELF-TEST MENU

Once the looping tests begin, enter the self-test menu by turning off the self-test switch.

The self-test menu now appears (see Figure 2-2). This menu allows more testing (using the color-bar test), allows the operator to review the game statistics, and allows the operator to modify the program option settings.

The instructions on how to use this menu and any of the displays that it leads to are all contained within the game program and are displayed as appropriate.

The EXIT function returns the game to normal game play. All of the other functions that may be selected from this menu return the user to this menu.

To select one of the self-test menu functions, use the left joystick to position the blinking arrow next to the desired function. Press and hold down the IGNITER button. To return to normal game play, select the EXIT function.

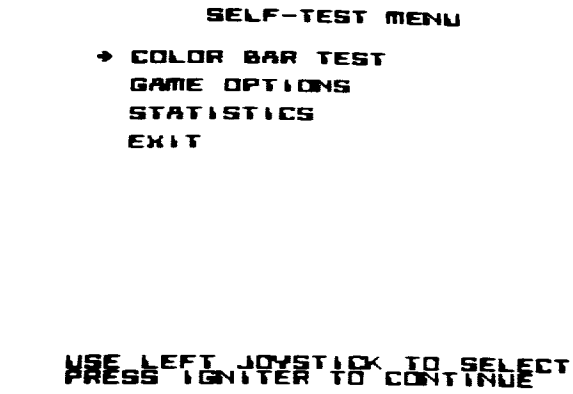

Figure 2-2 Self-Test Menu Display

COLOR BAR TEST

Selecting the COLOR BAR TEST displays a color bar showing the seven intensity levels for each color (see Figure 2-3). Red appears first. Press the IGNITER button to change colors. Pressing IGNITER repeatedly cycles through the three primary colors (red, green, and blue). Press either one of the player start switches to return to the self-test menu.

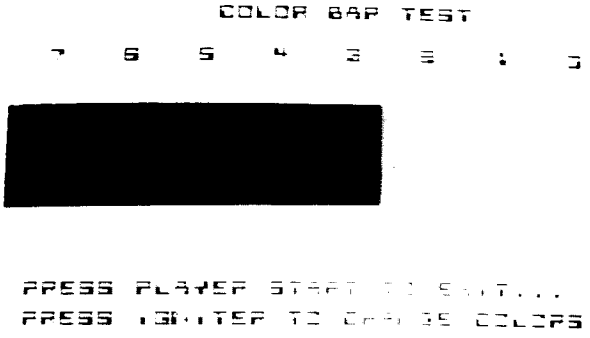

Figure 2-3 Color Bar Test Display

OPTION MENU Function

The OPTION MENU function should be viewed as part of the self-test procedure to ensure that the EAROM was correctly initialized (see Figure 2-4). The factory default game option settings are as follows:

		Possible Options
STARTING LIVES:	3	3—5
GIVE EXTRA LIVES?	YES	YES/NO
GIVE FREE GAMES?	YES	YES/NO
DIFFICULTY FACTOR:	B	A—D A = easiest; D = hardest

Use the left joystick to select the option you wish to change, then press IGNITER to choose the new option. The options now listed on the screen are the game operating options. To return to the self-test menu, press either the 1- or 2-player start button.

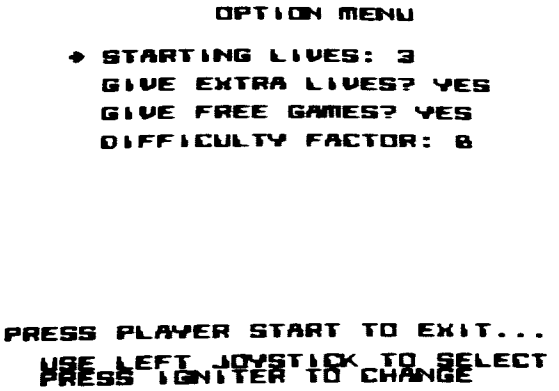

Figure 2-4 Option Menu Display

STATISTICS SUMMARY

The STATISTICS SUMMARY function should be viewed as part of the self-test procedure to ensure that the EAROM was correctly initialized (see Figure 2-5). All statistics values should read 0 if the game has never been played. If one or more games have been played since power was first applied to the game, the statistics show how many games have been started and completed, the number of free games given, the average game time, and the longest game time. To exit this function, press either the 1- or 2-player start button.

To clear the statistics and high-score table, hold down the IGNITER button while pressing either the 1- or 2-player start button.

> **NOTE**
>
> The total number of games played is not reset to zero with the rest of the statistics. This statistic clears only the first time the game is powered up.

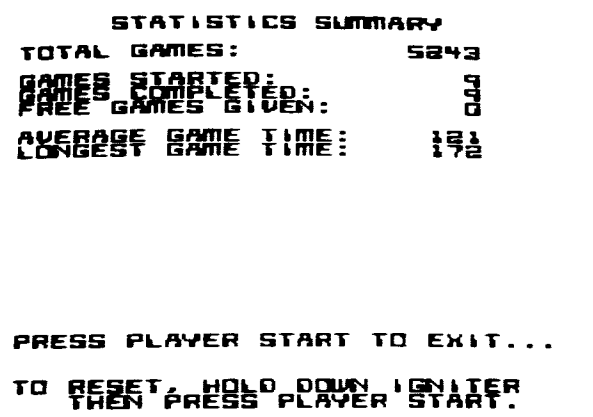

Figure 2-5 Statistics Summary Display

FINAL

Start the game and listen to the music as a final check. ONE low melody starts playing before a SECOND high melody begins to play. The two melodies play together. Be sure that BOTH melodies are present. (Each melody comes through a different sound IC and amplifier section.) This test checks both sets of sound channels.

Maintenance

The maintenance procedures provided in this chapter are for those items which are subject to the most severe use. To assure the maximum trouble-free operation from this game, Atari recommends that periodic routine maintenance be performed on the game components described in the following procedures. How often routine maintenance is performed depends upon the game environment and frequency of play.

WARNING

To avoid possible electrical shock hazard, unplug the game prior to performing any maintenance.

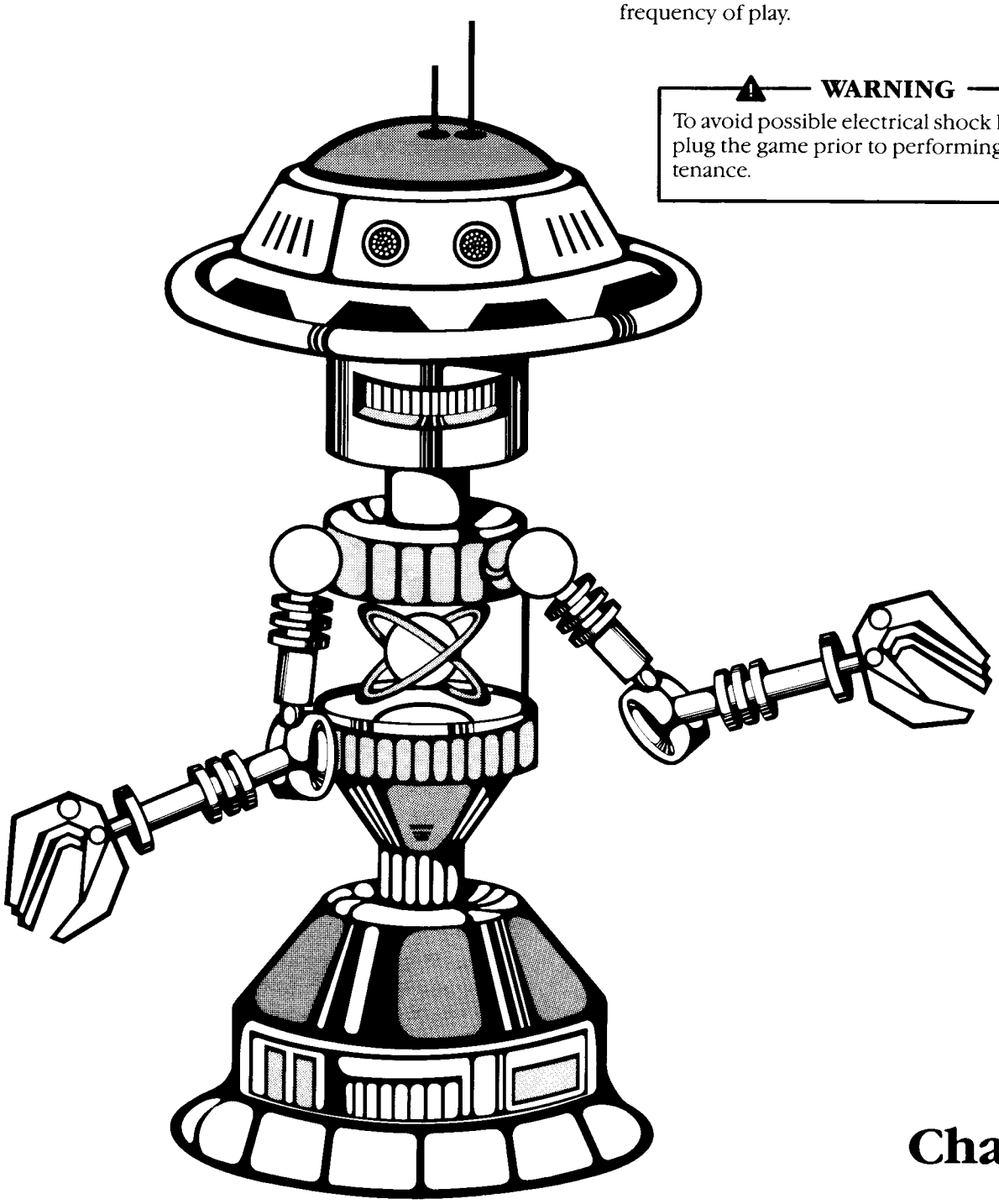

Chapter 3

Opening the Control Panel

Defender† Cabinet

1. Unlock and remove the rear access panel.
2. Reach inside the game cabinet and release the two spring-draw latches on the sides of the cabinet to the rear of the control panel.
3. Remove the #10 screws, securing the control panel to the cabinet, from the security brackets.
4. From the front of the game, lift the control panel and rest it on something approximately the same height as the cabinet.

Joust†, Robotron: 2084†, and Stargate† Cabinets

1. Unlock and remove the rear access panel.
2. Reach inside the game cabinet and release the two spring-draw latches on the right side of the hinged rear door.
3. Open the hinged rear door.
4. Reach inside the game cabinet and release the two spring-draw latches on the sides of the cabinet to the rear of the control panel.
5. Remove the #10 screws, securing the control panel to the cabinet, from the security brackets.
6. From the front of the game cabinet, lift the control panel at the top edge and tilt it toward you.

Removing the Joystick Assembly

Perform the following procedure to remove the joystick assembly from the control panel.

1. Open the control panel as previously described.
2. Disconnect the joystick harness wires.
3. Use a ⅜-inch hex nutdriver to remove the hardware that mounts the joysticks to the control panel.
4. Remove the joysticks from the control panel.

Disassembling the Joystick Assembly

Perform the following procedure to disassemble the joystick assembly (see Figure 3-1).

1. Remove the four screws in the plastic joystick frame.

NOTE

The joystick is a spring-loaded control. Be careful not to lose the switch actuator and spring as you remove the retaining ring in the next step.

2. Remove the retaining ring from the bottom of the shaft. The assembly will now come apart.
3. To remove the bellows, pry it up and out of the plastic frame.

Reassembling the Joystick Assembly

Perform the following procedure to reassemble the joystick assembly (see Figure 3-1).

1. Holding the control knob in one hand with the shaft pointing up, slide the large plastic washer onto the shaft.
2. Slide the flat side of the top plate on top of the plastic washer.
3. Slide the nylon washer onto the shaft over the top plate.
4. Slide the bellows on the shaft over the washer. Note that the inner raised ring on the bellows is longer on one side. This side goes next to the washer (toward the control knob). Position the four screw holes in the bellows over the screw holes in the top plate.
5. Slide the steel washer onto the shaft to rest on the bellows.
6. Slide the spring on top of the washer.
7. Slide the switch plate on top of the spring, positioning the four screw holes over those in the top plate.
8. Use a Phillips-head screwdriver to install the four screws that hold the switch plate and top plate together.
9. Slide the nylon switch actuator onto the shaft over the switch plate. Note that the smaller recessed end of the switch actuator fits down on the spring.
10. The switch actuator must be pressed down on the spring and held under pressure while you secure the retaining ring.

†Trademarks of Williams Electronics, Inc.

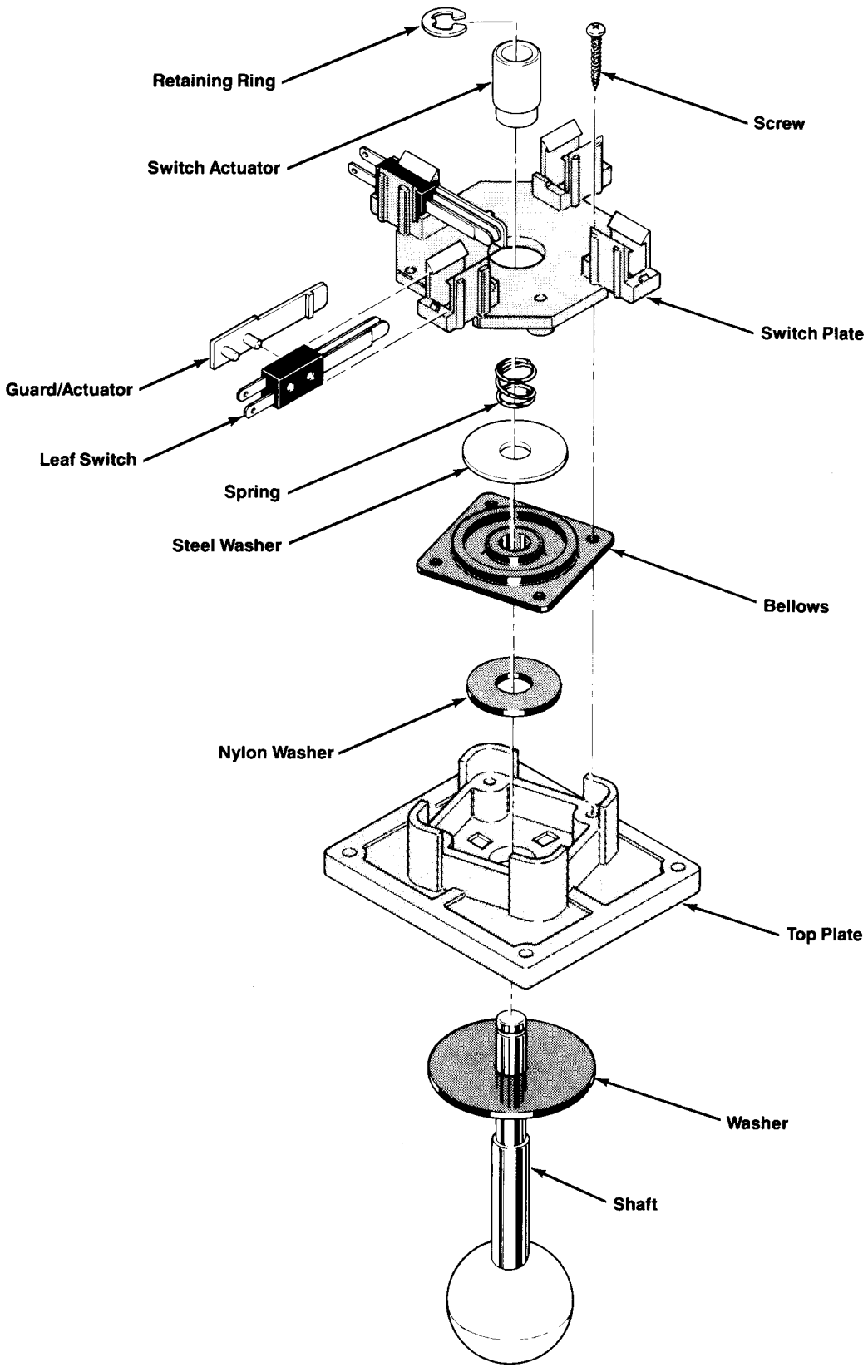

Figure 3-1 8-Position Joystick Assembly

Removing the Joystick Leaf Switches

Perform the following procedure to remove the joystick leaf switches from the 8-position joystick assembly (see Figure 3-1).

1. To remove the joystick leaf switches, you do not need to disassemble the joystick. Disconnect the snap-on wire connectors to each leaf switch and, using your thumbs, pry apart the plastic flanges on the switch holder. With your index finger, lift the switch up so that it will clear the plastic tab located on the outside end of the switch holder.
2. Slide the leaf switch out of its holder.
3. Replace the switch in reverse order.

Adjusting the Joystick Leaf Switches

Perform the following procedure to adjust the joystick leaf switches on the 8-position joystick assembly.

1. Make sure that each leaf switch is firmly seated in its holder. There is a small gray plastic tab on the outside end of the switch holder. The black plastic part of each leaf switch must be in front of this tab. The plastic guard/actuator must be on the side of the switch toward the switch actuator.
2. Check that all four leaf switches can be activated by watching the switch blades as you move the joystick handle up, down, left, and right.
3. Test the four diagonal positions. In each diagonal position, two leaf switches should close. Switches should continue bending slightly after making contact.
4. Adjust each switch contact for a narrow gap using the following procedure:
   a. Push the joystick handle away from the switch for easier servicing.
   b. Use a pair of needlenose pliers or a switch adjustment tool to bend each double set of blades in toward the center. Make the bend where the double set of blades protrude from the black plastic part of the switch.
5. Recheck the switch action. The switches must move independently for right, left, up, down, and diagonal motion of the joystick.

Pushbutton Leaf Switch

Perform the following procedure to adjust the pushbutton leaf switch on the control panel.

1. With the control panel open, adjust the leaf switch contacts for a narrow gap. When the pushbutton is depressed, the resulting wiping action of the cross-bar contacts provides a self-cleaning feature. *Don't burnish the contacts.* To clean them, use electrical contact cleaner.
2. To replace the leaf switch, remove the screw with a Phillips-head screwdriver.
3. To replace the switch pushbutton, turn the stamped nut with a wrench in a counterclockwise direction, as seen from the inside of the control panel. The ring on the outside of the control panel should not spin.
4. Reinstall the pushbutton switch. Reconnect the harness wires to the switch terminals.

Start Switches

Perform the following procedure to adjust the start switches on the control panel.

NOTE

Start switches can be checked for proper operation with an ohmmeter. Disconnect the wires from the switch terminals and connect an ohmmeter between the normally open and common contacts. Press and release the pushbutton and check for zero and infinite resistance. If the switch is not operating properly, perform the following procedure.

1. Turn the switch counterclockwise while firmly holding the black cone-shaped bushing on the outside of the control panel.
2. Install a new switch using the reverse procedure.
3. Reconnect the harness wires as shown in Figure 3-2. Make certain the right colors go to the right tabs on the switch.

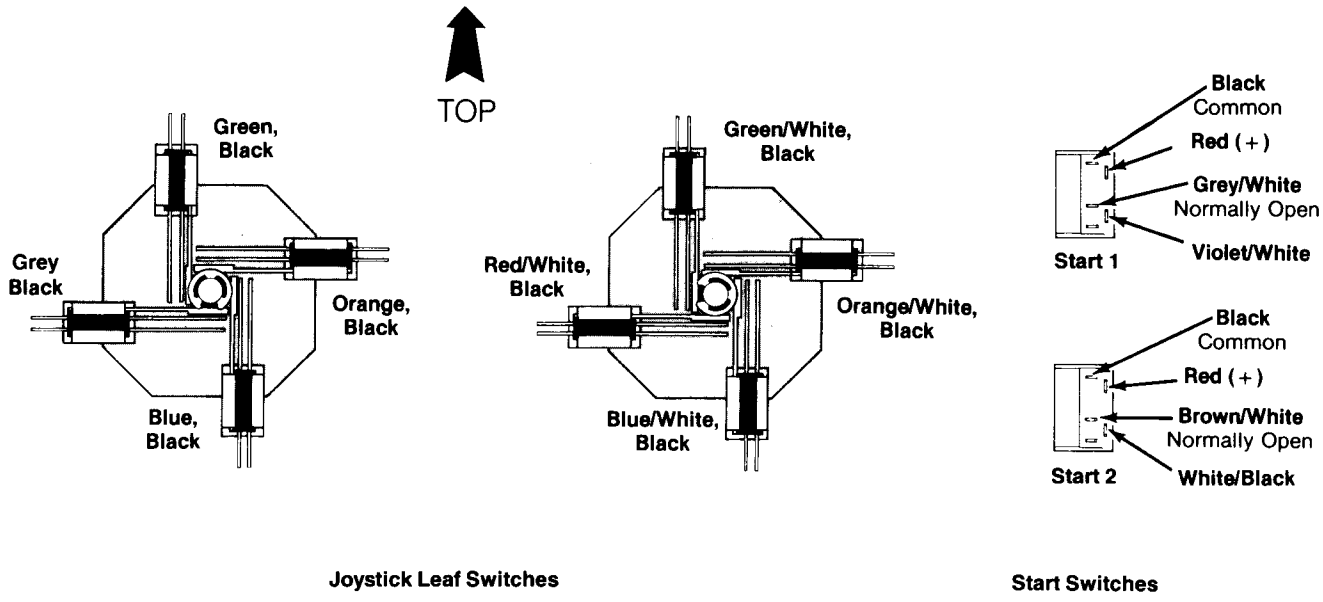

Figure 3-2 Wire Connections to the Control Panel

Illustrated Parts Lists

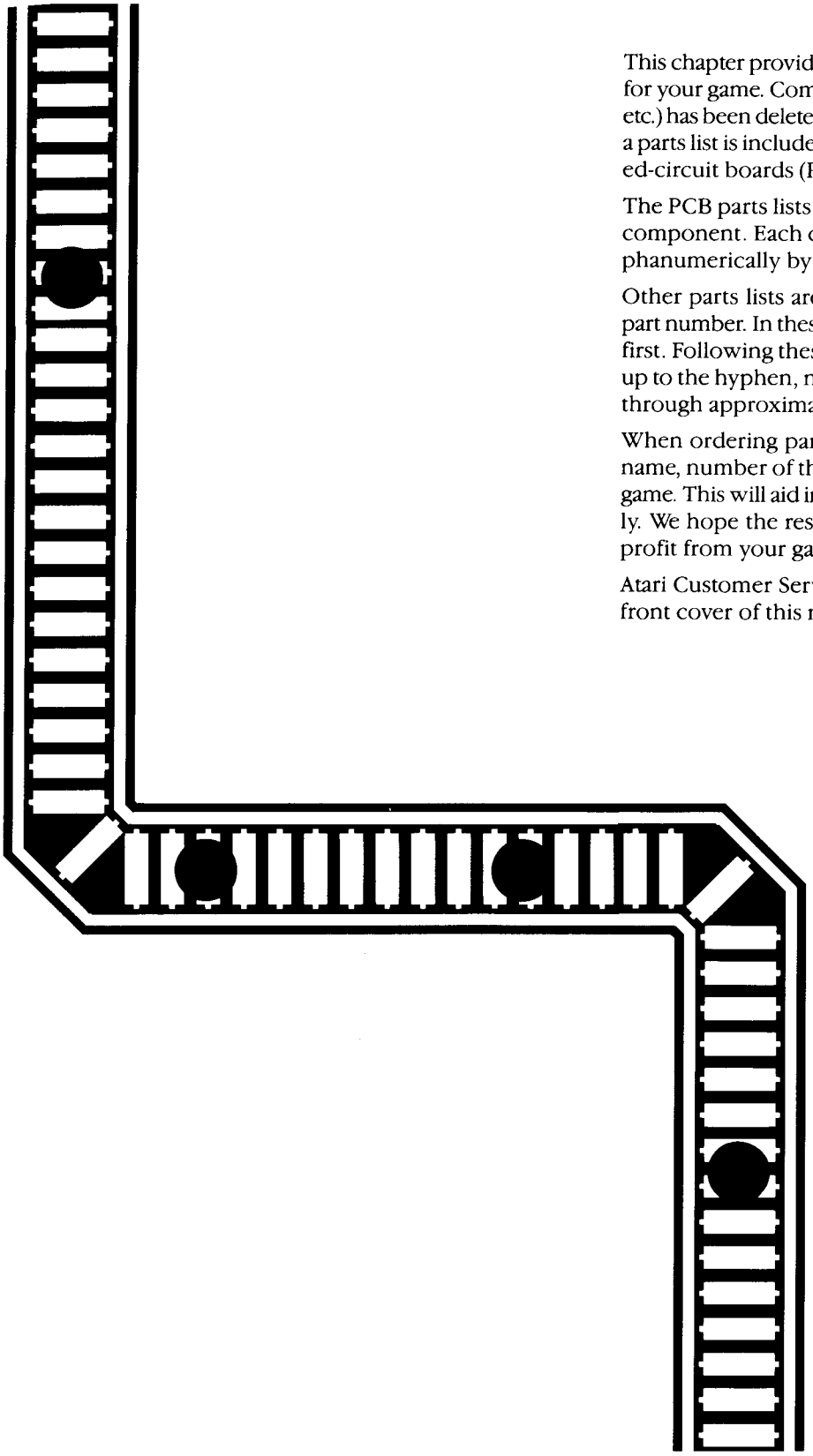

This chapter provides information you need to order parts for your game. Common hardware (screws, nuts, washers, etc.) has been deleted from most of the parts lists. However, a parts list is included for the hardware to mount the printed-circuit boards (PCB) to the cabinet.

The PCB parts lists are arranged in alphabetical order by component. Each component subsection is arranged alphanumerically by reference designator.

Other parts lists are arranged alphanumerically by Atari part number. In these parts lists, all A-prefix numbers come first. Following these are numbers in sequence evaluated up to the hyphen, namely 00- through 99-, then 000598- through approximately 201000-.

When ordering parts, please give the part number, part name, number of this manual, and serial number of your game. This will aid in filling your order rapidly and correctly. We hope the results will be less downtime and more profit from your game.

Atari Customer Service numbers are listed on the inside front cover of this manual.

Chapter 4

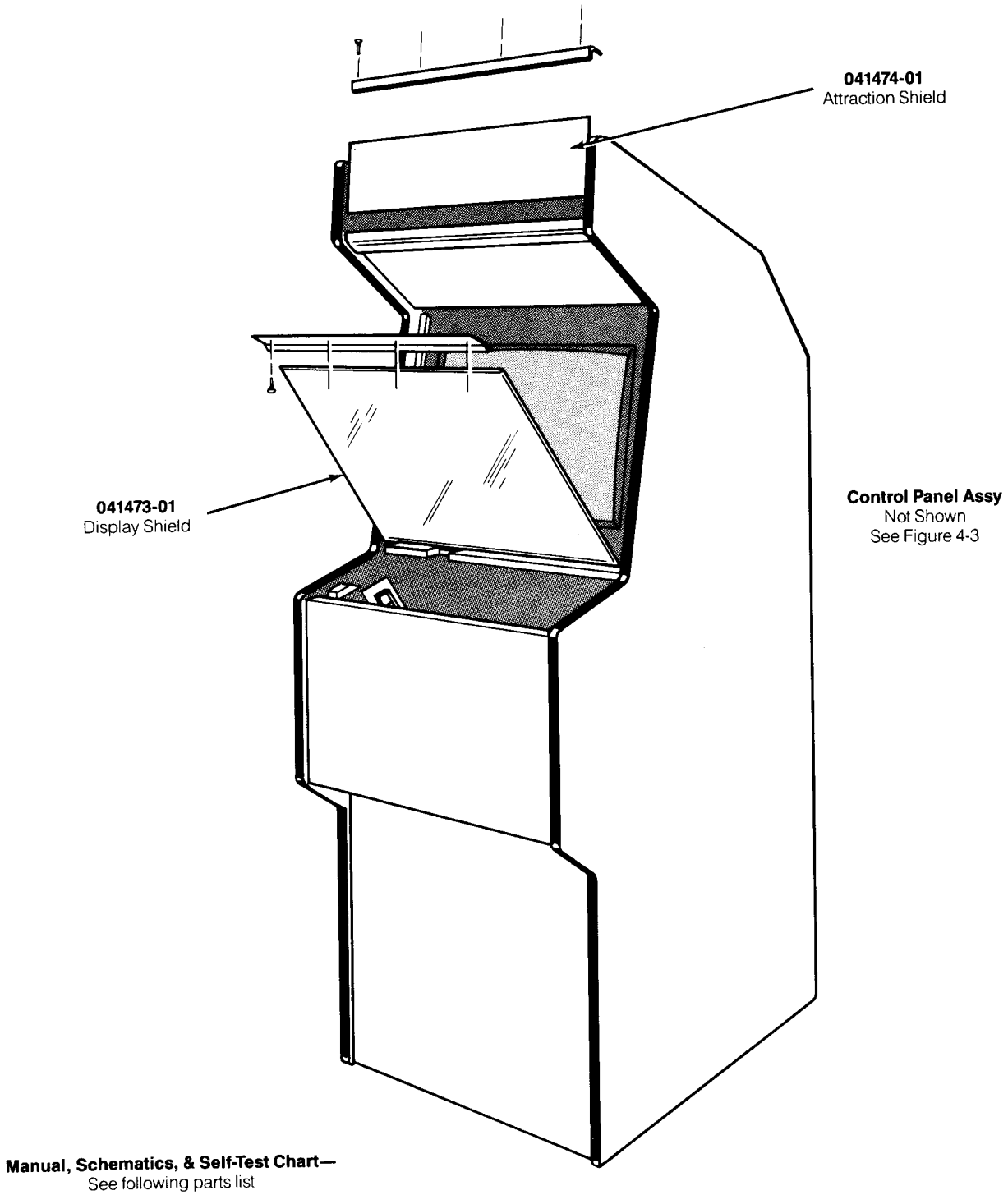

Figure 4-1 CLOAK & DAGGER Retrofit Kit Contents for Defender A041462-01 A

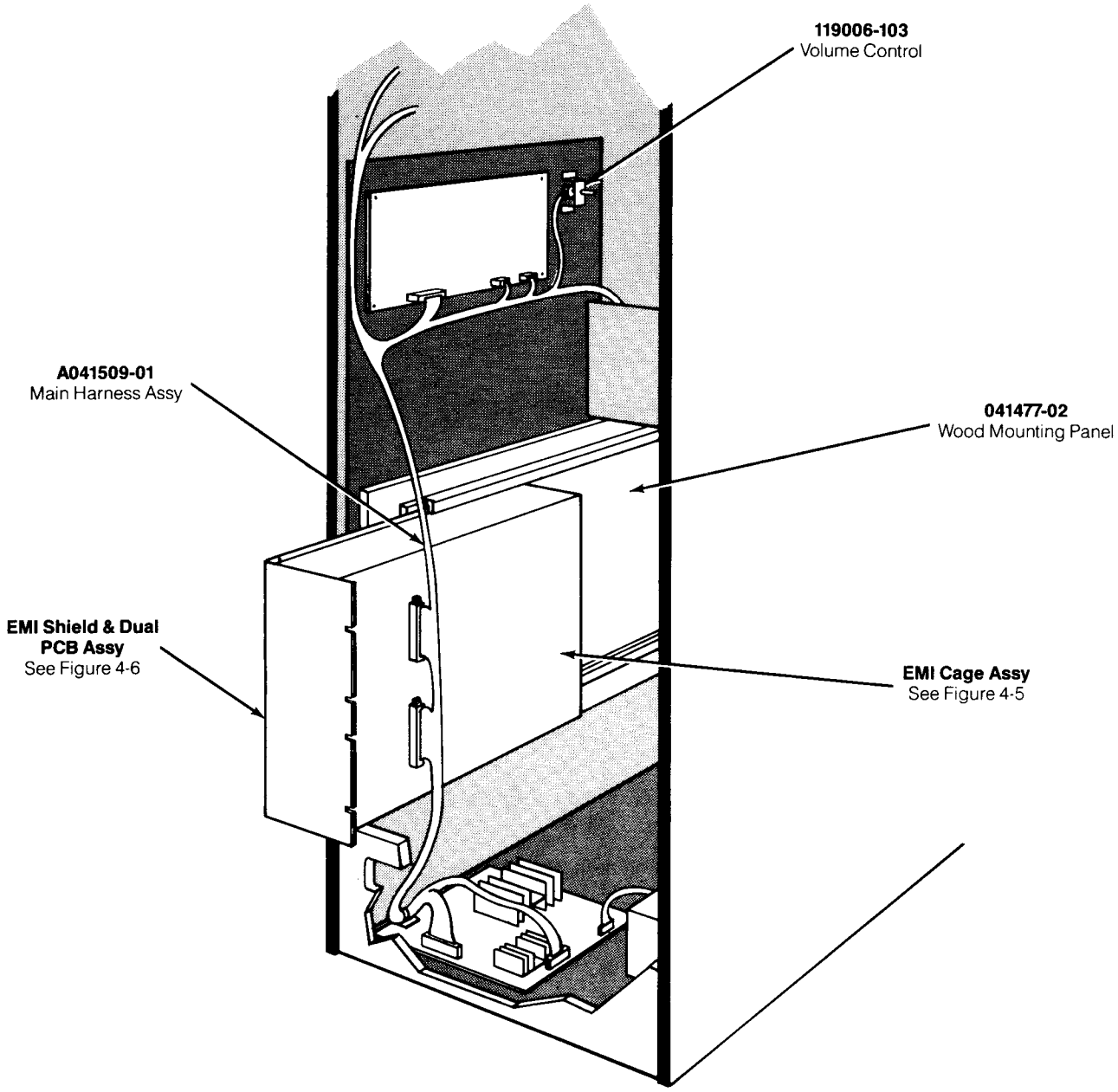

Figure 4-1 CLOAK & DAGGER Retrofit Kit Contents for Defender, continued
A041462-01 A

CLOAK & DAGGER Retrofit Kit Contents for Defender Parts List

Part No.	Description
A037701-01	Electromagnetic Interference (EMI) Cage and Guides Assembly—includes
037700-02	EMI Cage
178047-032	PCB Guide
A040733-01	EMI Shield and Dual PCB Assembly—includes
A039431-02	CLOAK & DAGGER Interconnect PCB (not shown—located in EMI Cage)
A039938-21	CLOAK & DAGGER Slave PCB (not shown—located in EMI Cage)
A039942-21	CLOAK & DAGGER Master PCB (not shown—located on EMI Cage)
A040404-01	EMI Shield PCB (not shown—located in EMI Cage)
A041463-01	Control Panel Assembly—includes
A041465-01	Control Panel and Decal Assembly
A040729-01	Control Harness Assembly
171021-001	8-Position Joystick Assembly
A041509-01	Retrofit Main Harness and Component Assembly—includes
A041402-01	Main Harness
119006-103	10 kΩ Dual Potentiometer (Volume Control)
SP-242	CLOAK & DAGGER Schematic Package
ST-242-01	CLOAK & DAGGER Chart with Self-Test Procedure and Option Switch Settings
TM-242	CLOAK & DAGGER Operators Manual
72-1816F	#8-32 × 1-Inch Long Cross-Recessed Pan-Head Machine Screw (used to mount wood panel to cabinet wall—not shown)
75-018S	#8 Flat Washer (used to mount wood panel to cabinet wall—not shown)
75-048S	#8 Split-Lock Washer (used to mount wood panel to cabinet wall—not shown)
038086-01	Shock Warning Label (not shown)
038158-03	Product ID Label (not shown)
039450-01	FCC Compliance Label (not shown)
041471-01	Left Side-Panel Decal (not shown)
041471-02	Right Side-Panel Decal (not shown)
041472-01	Coin-Mechanism Panel Decal (not shown)
041473-01	Display Shield
041474-01	Attraction Shield
041476-01	Attraction Shield Semi-Rigid Film (not shown—located behind attraction shield)
041477-02	Wood Mounting Panel for EMI Cage Assembly
175004-708	#8 Flat Fiber Washer (used to mount EMI cage to wood panel—not shown)
176015-112	#10 × ¾-Inch Long Cross-Recessed Pan-Head Screw (one used to mount EMI cage to wood panel; two used on control panel—not shown)

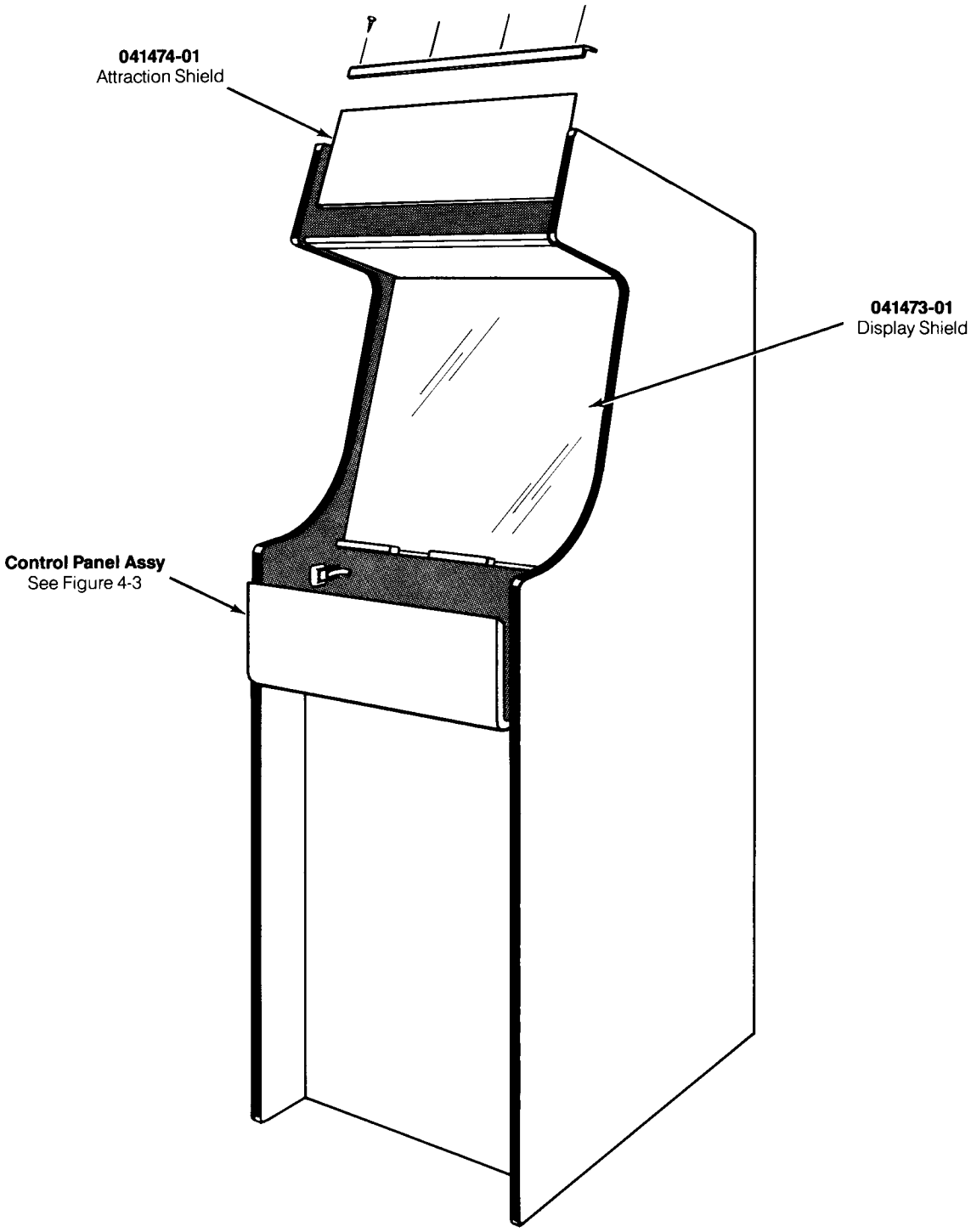

Figure 4-2 CLOAK & DAGGER Retrofit Kit Contents for Joust, Robotron: 2084, and Stargate A041462-02 A

Manual, Schematics, & Self-Test Chart—
See following parts list

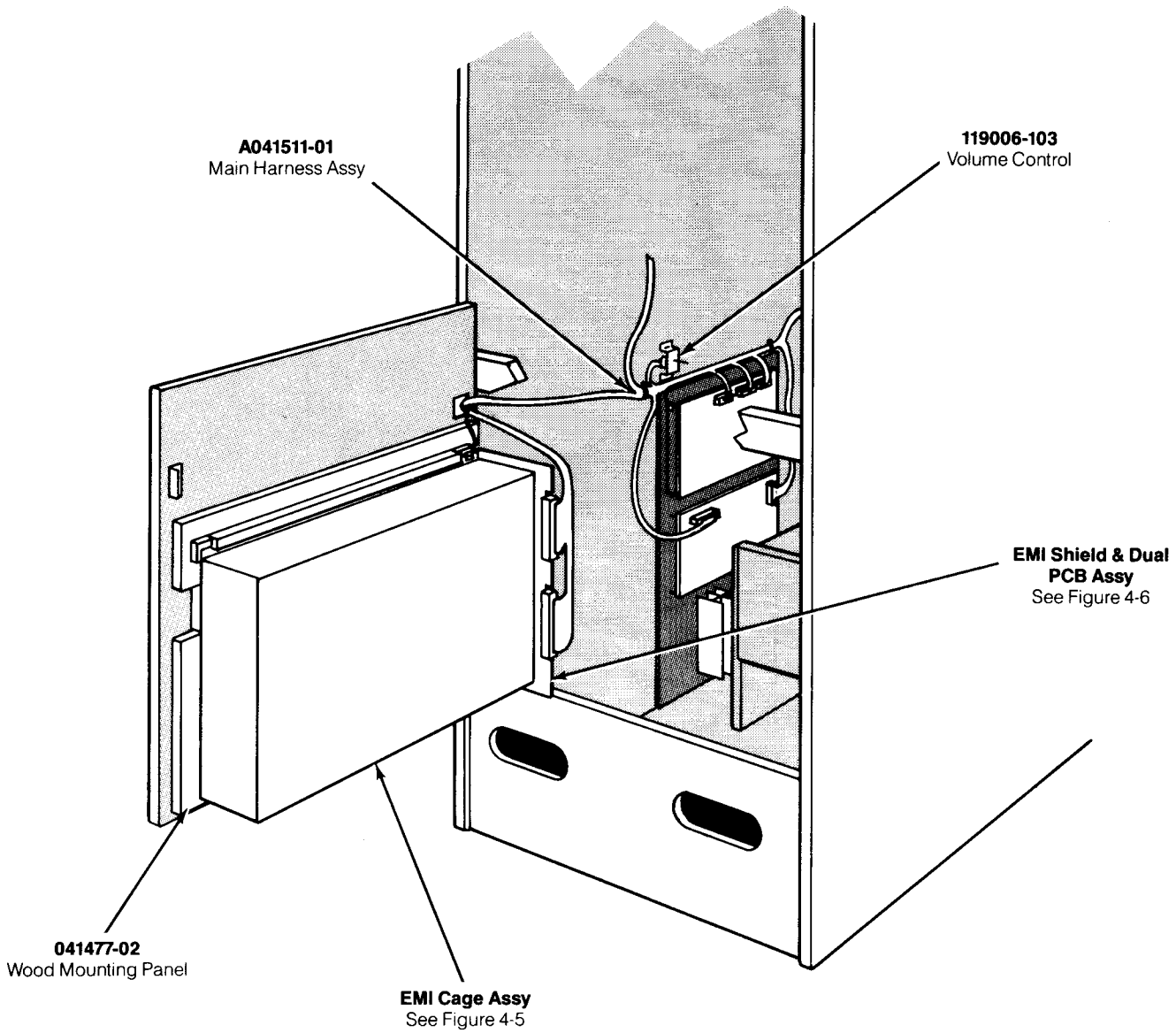

Figure 4-2 CLOAK & DAGGER Retrofit Kit Contents for Joust, Robotron: 2084, and Stargate, continued
A041462-02 A

CLOAK & DAGGER Retrofit Kit Contents for Joust, Robotron: 2084, and Stargate Parts List

Part No.	Description
A037701-01	Electromagnetic Interference (EMI) Cage and Guides Assembly—includes
037700-02	EMI Cage
178047-032	PCB Guide
A040733-01	EMI Shield and Dual PCB Assembly—includes
A039431-02	CLOAK & DAGGER Interconnect PCB (not shown—located in EMI Cage)
A039938-21	CLOAK & DAGGER Slave PCB (not shown—located in EMI Cage)
A039942-21	CLOAK & DAGGER Master PCB (not shown—located in EMI Cage)
A040404-01	EMI Shield PCB (not shown—located in EMI Cage)
A041464-01	Control Panel Assembly—includes
A041465-01	Control Panel and Decal Assembly
A040729-01	Control Harness Assembly
171021-001	8-Position Joystick Assembly
A041511-01	Retrofit Main Harness and Component Assembly—includes
A041510-01	Main Harness
119006-103	10 kΩ Dual Potentiometer (Volume Control)
SP-242	CLOAK & DAGGER Schematic Package
ST-242-01	CLOAK & DAGGER Chart with Self-Test Procedure and Option Switch Settings
TM-242	CLOAK & DAGGER Operators Manual
72-1816F	#8-32 × 1-Inch Long Cross-Recessed Pan-Head Machine Screw (used to mount wood panel to cabinet wall—not shown)
75-018S	#8 Flat Washer (used to mount wood panel to cabinet wall— not shown)
75-048S	#8 Split-Lock Washer (used to mount wood panel to cabinet wall—not shown)
038086-01	Shock Warning Label (not shown)
038158-03	Product ID Label (not shown)
039450-01	FCC Compliance Label (not shown)
041471-01	Left Side-Panel Decal (not shown)
041471-02	Right Side-Panel Decal (not shown)
041473-01	Display Shield
041474-01	Attraction Shield
041476-01	Attraction Shield Semi-Rigid Film (not shown—located behind attraction shield)
041477-02	Wood Mounting Panel for EMI Cage Assembly
175004-708	#8 Flat Fiber Washer (used to mount EMI cage to wood panel—not shown)
176015-112	#10 × ¾-Inch Long Cross-Recessed Pan-Head Screw (used to mount EMI cage to wood panel—not shown)

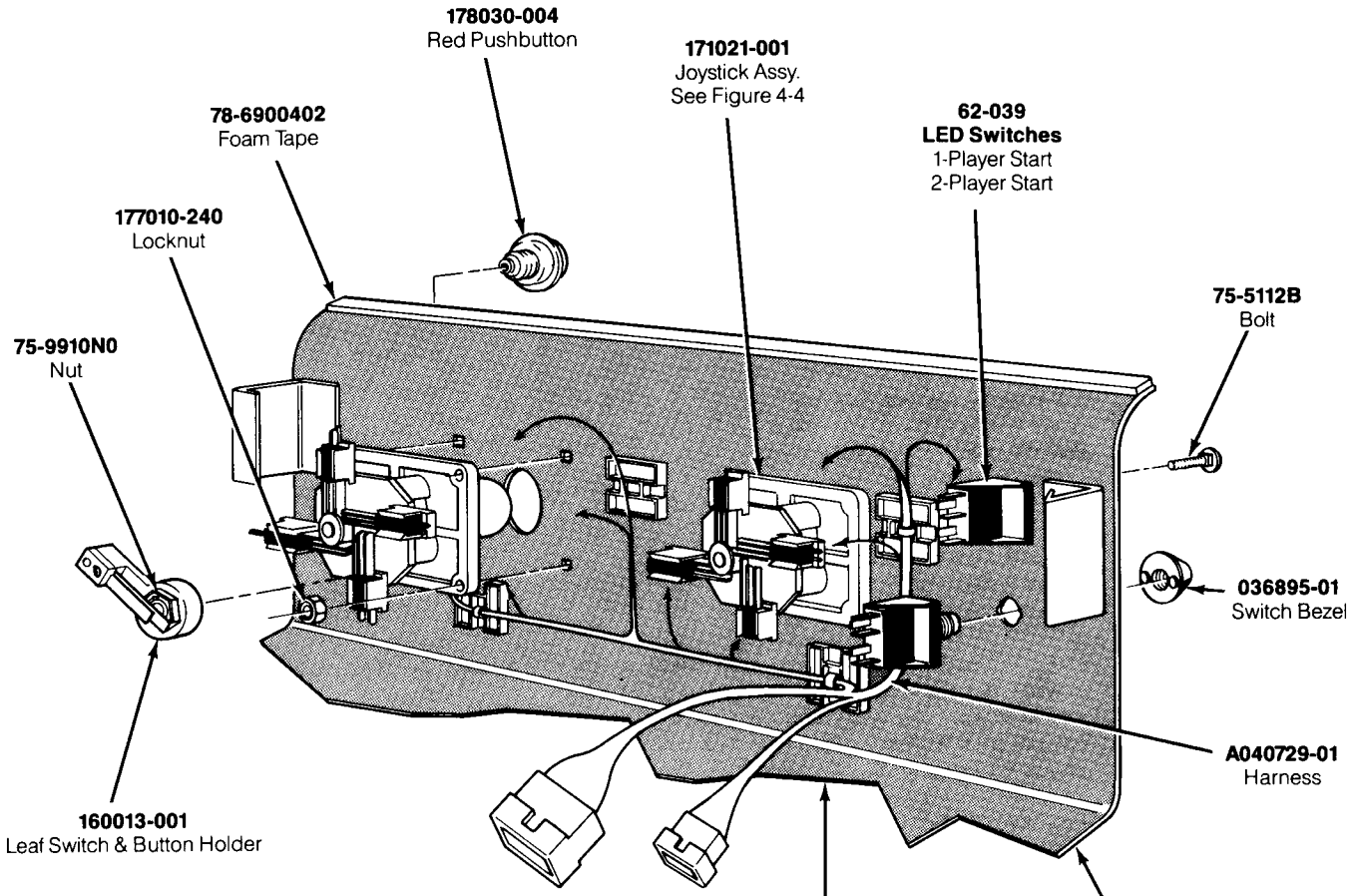

WARNING

Players may receive an electrical shock if this control panel is not properly grounded! After servicing any parts on the panel, make sure that the ground strap is making contact with the control panel.

Figure 4-3 Control Panel Assembly
Defender Cabinet A041463-01 A
Joust, Robotron: 2084, and Stargate Cabinets A041464-01 A

Control Panel Assembly
Parts List

Part No.	Description
	Defender Cabinet
A041465-01	Control Panel with Decal
041467-01	Control Panel
	Joust, Robotron: 2084, Stargate Cabinets
A041466-01	Control Panel with Decal
041468-01	Control Panel
	All Cabinets
A041729-01	Control Panel Harness Assembly
62-039	SPDT Momentary Pushbutton Start Switch with Red Light- Emitting Diode
75-5112B	#10-24 Black Carriage Bolt
75-9910N0	#⅝ × 11 Stamped Nut
78-6900402	Vinyl Foam Single-Coated Adhesive Tape, ¼-Inch Wide x ⅛-Inch Thick (24 inches required)
036895-01	Black Molded Switch Bezel
040489-03	Control Panel Decal (not shown)
160013-001	Leaf Switch and Button Holder (leaf switch only is part no. 160012-001)
171021-001	8-Position Joystick Assembly
177010-240	#10-24 Hex Locknut
178030-004	Red Pushbutton Assembly
179125-001	Grounding Terminal (not shown)

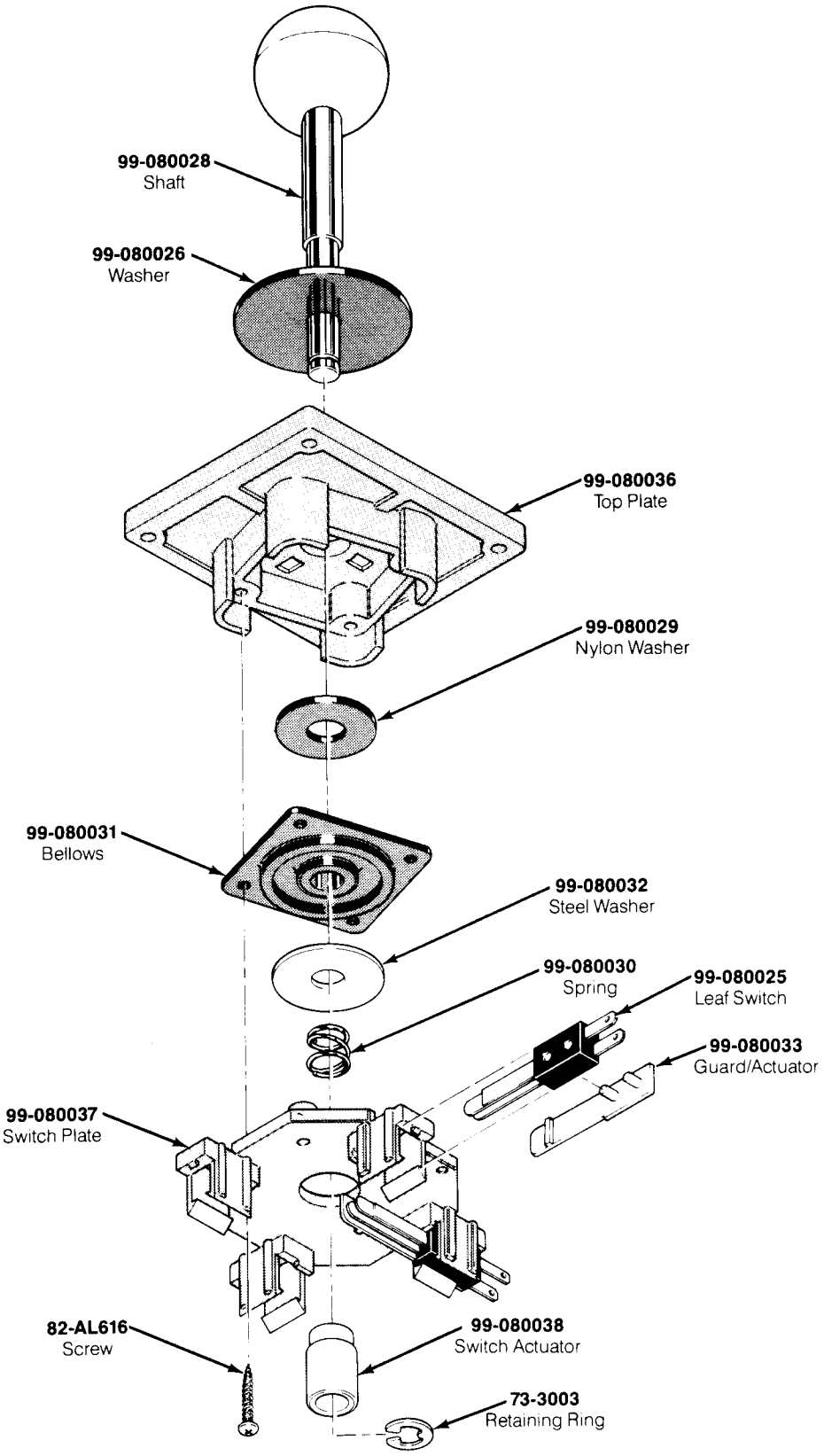

Figure 4-4 8-Position Joystick Assembly
171021-001 A

8-Position Joystick Assembly
Parts List

Part No.	Description
73-3003	Retaining Ring
82-AL616	#6 x 1-Inch Cross-Recessed Pan-Head Type BT Tapping Steel Screw
99-080025	Leaf Switch
99-080026	2-Inch Black Plastic Washer
99-080028	Metal Shaft
99-080029	Nylon Washer
99-080030	Spring
99-080031	Bellows
99-080032	Flat Steel Washer
99-080033	Plastic Guard/Actuator
99-080036	Top Plate
99-080037	Switch Mounting Plate
99-080038	Nylon Switch Actuator

NOTE

Within the United States the Federal Communications Commission requires that the game printed-circuit boards be housed in the Electromagnetic Interference Cage with the Electromagnetic Interference Shield Printed-Circuit Board attached.

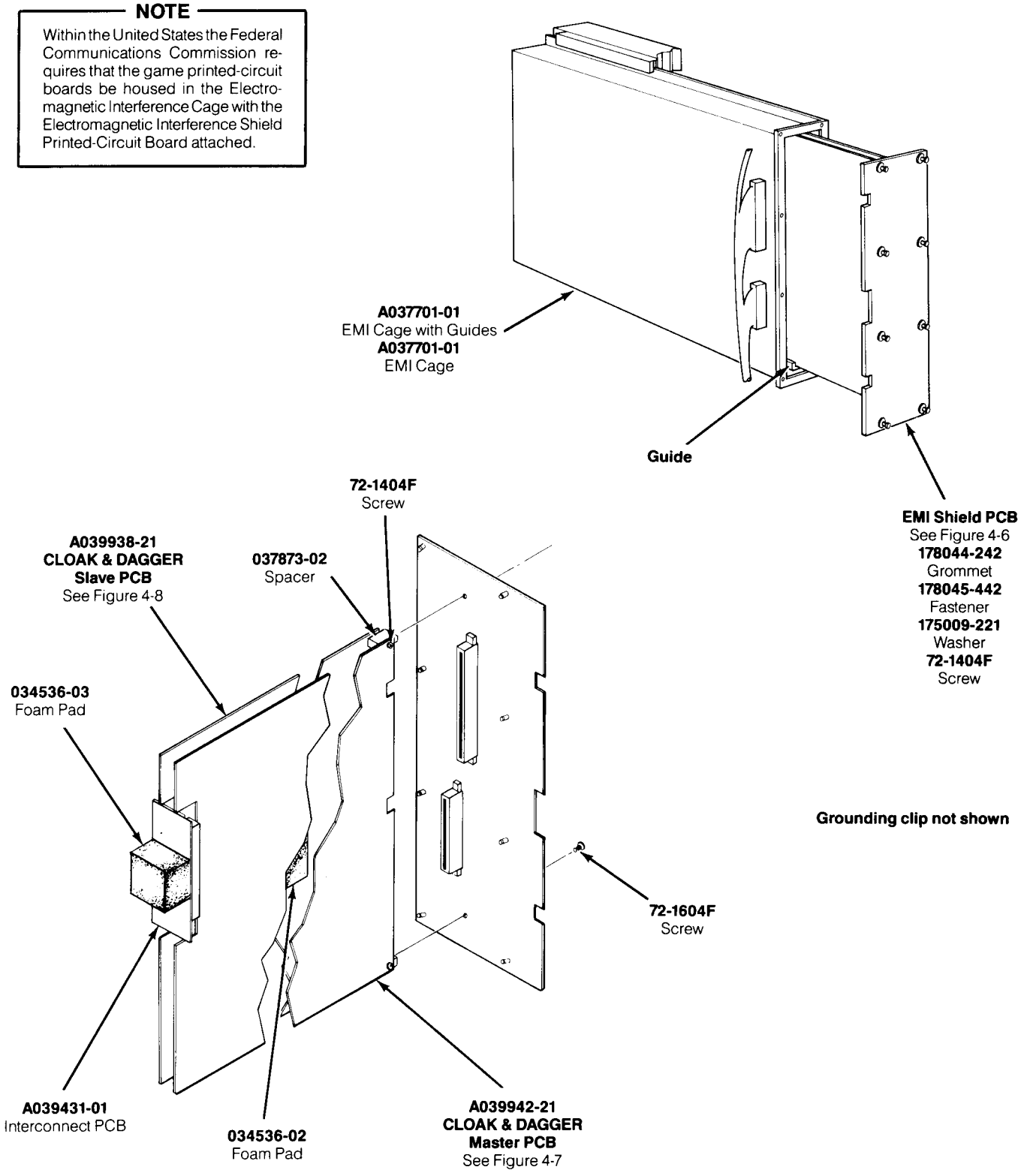

Figure 4-5 Electromagnetic Interference (EMI) Cage Assemblies and PCB Mounting Hardware

EMI Cage Assemblies and PCB Mounting Hardware Parts List

Part No.	Description
A037701-01	EMI Cage (includes guides)
A039431-01	Interconnect PCB
A039938-21	CLOAK & DAGGER Slave PCB
A039942-21	CLOAK & DAGGER Master PCB
A040404-01	EMI Shield PCB–includes
72-1404F	#4-40 × ¼-Inch Cross-Recessed Steel Screw
037873-02	Spacer
175009-221	Plastic Washer
178044-242	Grommet
178045-442	Snap-In Fastener
72-1604F	#6-36 × ¼-Inch Cross-Recessed Pan-Head Screw
034536-02	0.50-Inch Thick Foam Pad (located between Master and Slave PCB)
034536-03	1.12-Inch Thick Foam Pad (located on Interconnect PCB)
175004-708	#8 Flat Fiber Washer
176015-112	#10 × ¾-Inch Cross-Recessed Pan-Head Screw
179125-001	Grounding Clip (not shown)

NOTICE TO ALL PERSONS RECEIVING THIS DRAWING CONFIDENTIAL: Reproduction forbidden without the specific written permission of Atari, Inc., Sunnyvale, CA. This drawing is only conditionally issued, and neither receipt nor possession thereof confers or transfers any right in, or license to use, the subject matter of the drawing or any design or technical information shown thereon, nor any right to reproduce this drawing or any part thereof. Except for manufacture by vendors of Atari, Inc., and for manufacture under the corporation's written license, no right is granted to reproduce this drawing or the subject matter thereof, unless by written agreement with or written permission from the corporation.

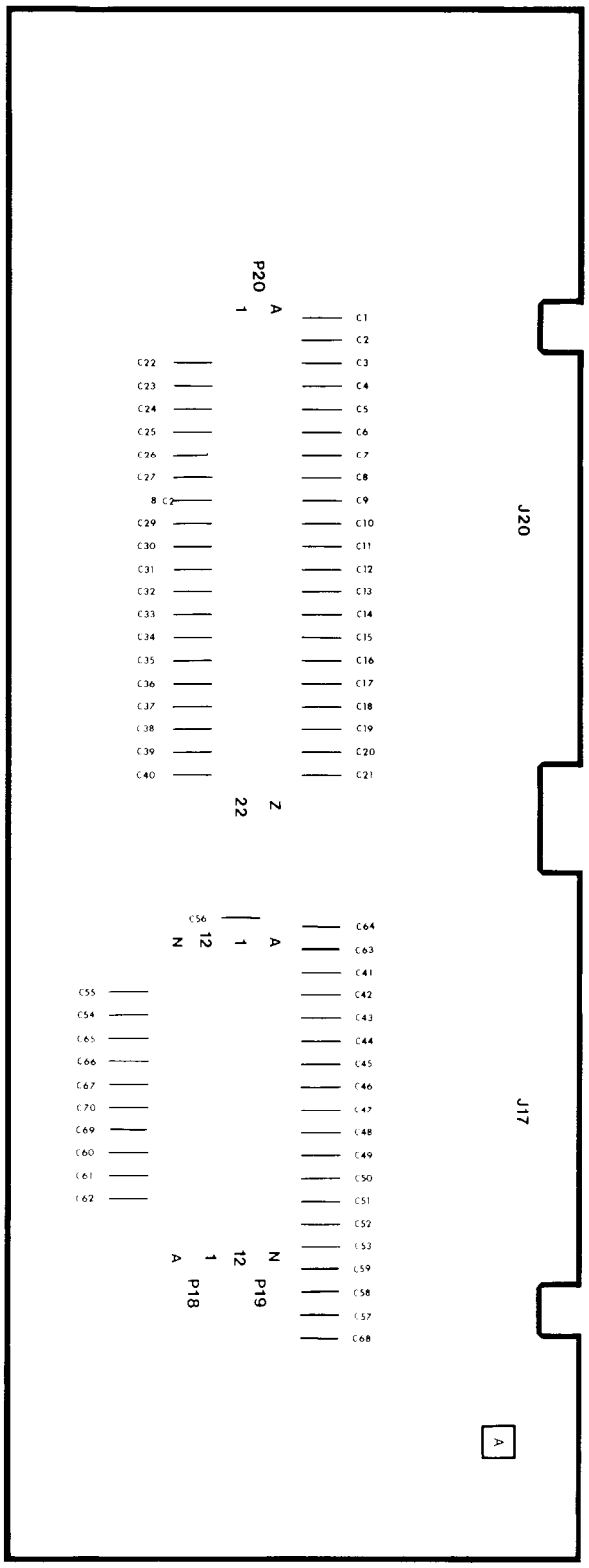

Figure 4-6 EMI Shield PCB Assembly A040404-01 A

EMI Shield PCB Assembly
Parts List

Designator	Description	Part No.
	Capacitors	
C1–C5	0.1 μF, +80%, -20%, 50 V Ceramic Capacitor	122002-104
C6–C16	0.01 μF, +80%, -20%, 25 V Minimum, Axial-Lead Ceramic Capacitor	122005-103
C21	0.1 μF, +80%, -20%, 50 V Ceramic Capacitor	122002-104
C24, C25	0.01 μF, +80%, -20%, 25 V Minimum, Axial-Lead Ceramic Capacitor	122005-103
C27–C35	0.01 μF, +80%, -20%, 25 V Minimum, Axial-Lead Ceramic Capacitor	122005-103
C37–C41	0.1 μF, +80%, -20%, 50 V Ceramic Capacitor	122002-104
C44	0.1 μF, +80%, -20%, 50 V Ceramic Capacitor	122002-104
C49–C53	0.01 μF, +80%, -20%, 25 V Minimum, Axial-Lead Ceramic Capacitor	122005-103
C54–C56	0.1 μF, +80%, -20%, 50 V Ceramic Capacitor	122002-104
C57, C58	0.01 μF, +80%, -20%, 25 V Minimum, Axial-Lead Ceramic Capacitor	122005-103
C60–C62	0.1 μF, +80%, -20%, 50 V Ceramic Capacitor	122002-104
C63–C65	470 pF, 100 V Ceramic Capacitor (Acceptable substitute is part no.122013-471)	122016-471
C66	0.01 μF, +80%, -20%, 25 V Minimum, Axial-Lead Ceramic Capacitor	122005-103
C67	1000 pF, ±5%, 100 V Axial-Lead Ceramic Capacitor	122016-102
C68	0.01 μF, +80%, -20%, 25 V Minimum, Axial-Lead Ceramic Capacitor	122005-103
C69, C70	1000 pF, ±5%, 100 V Axial-Lead Ceramic Capacitor	122016-102
	Connectors	
P18, P19	24-Pin Connector (Acceptable substitute is part no. 179041-024)	179073-024
P20	44-Pin Connector (Acceptable substitute is part no. 179046-044)	179073-044
	Miscellaneous	
	Spacer	037873-02
	#4-40 × ¼-Inch Cross-Recessed Pan-Head Steel Machine Screw	72-1404F
	Plastic Washer	175009-221
	Grommet	178044-242
	Snap-In Fastener	178045-442

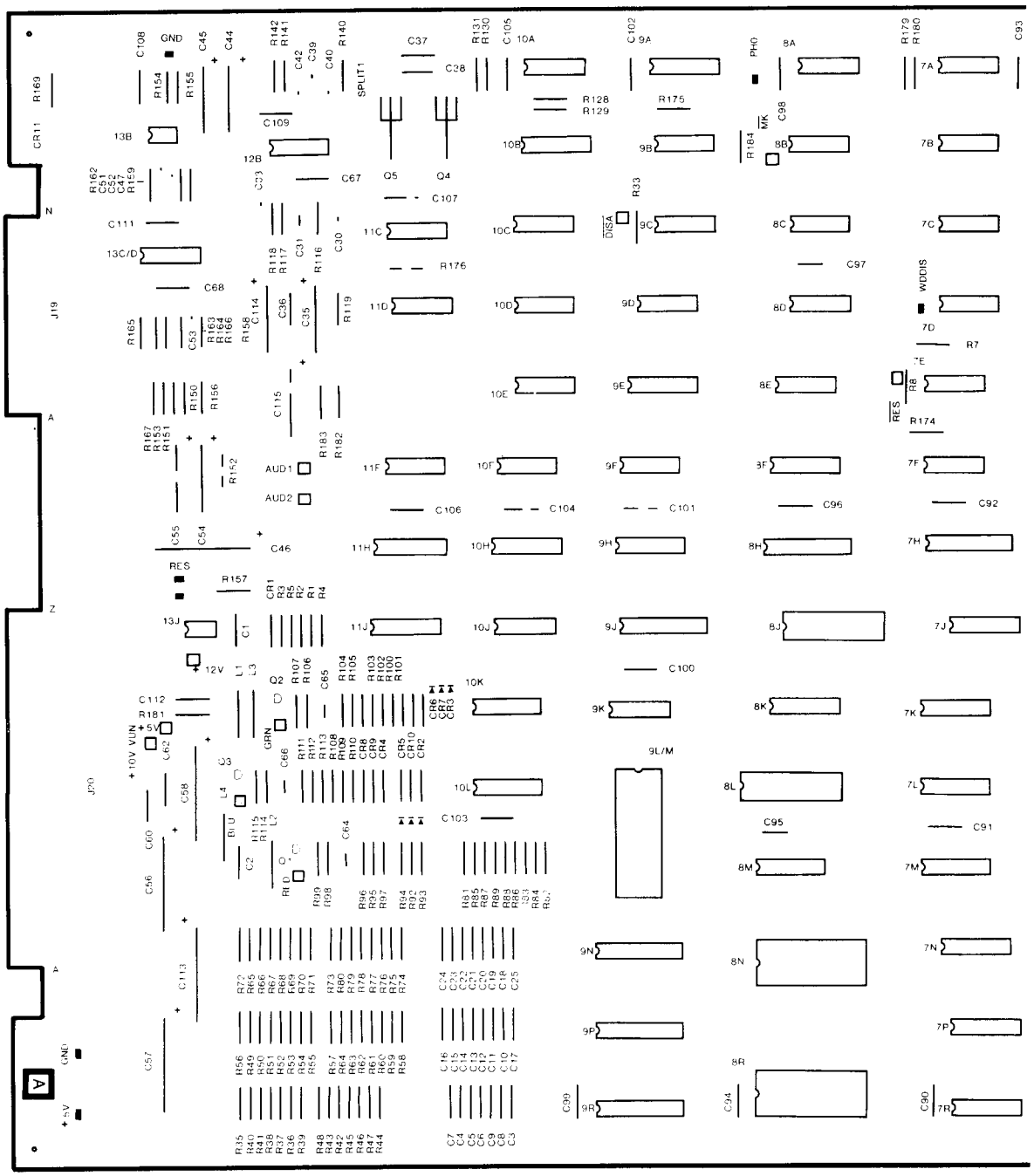

Figure 4-7 CLOAK & DAGGER Master PCB Assembly A039942-21 A

NOTICE TO ALL PERSONS RECEIVING THIS DRAWING CONFIDENTIAL: Reproduction forbidden without the specific written permission of Atari, Inc., Sunnyvale, CA. This drawing is only conditionally issued, and neither receipt nor possession thereof confers or transfers any right in, or license to use, the subject matter of the drawing or any design or technical information shown thereon, nor any right to reproduce this drawing or any part thereof. Except for manufacture by vendors of Atari, Inc., and for manufacture under the corporation's written license, no right is granted to reproduce this drawing or the subject matter thereof, unless by written agreement with or written permission from the corporation.

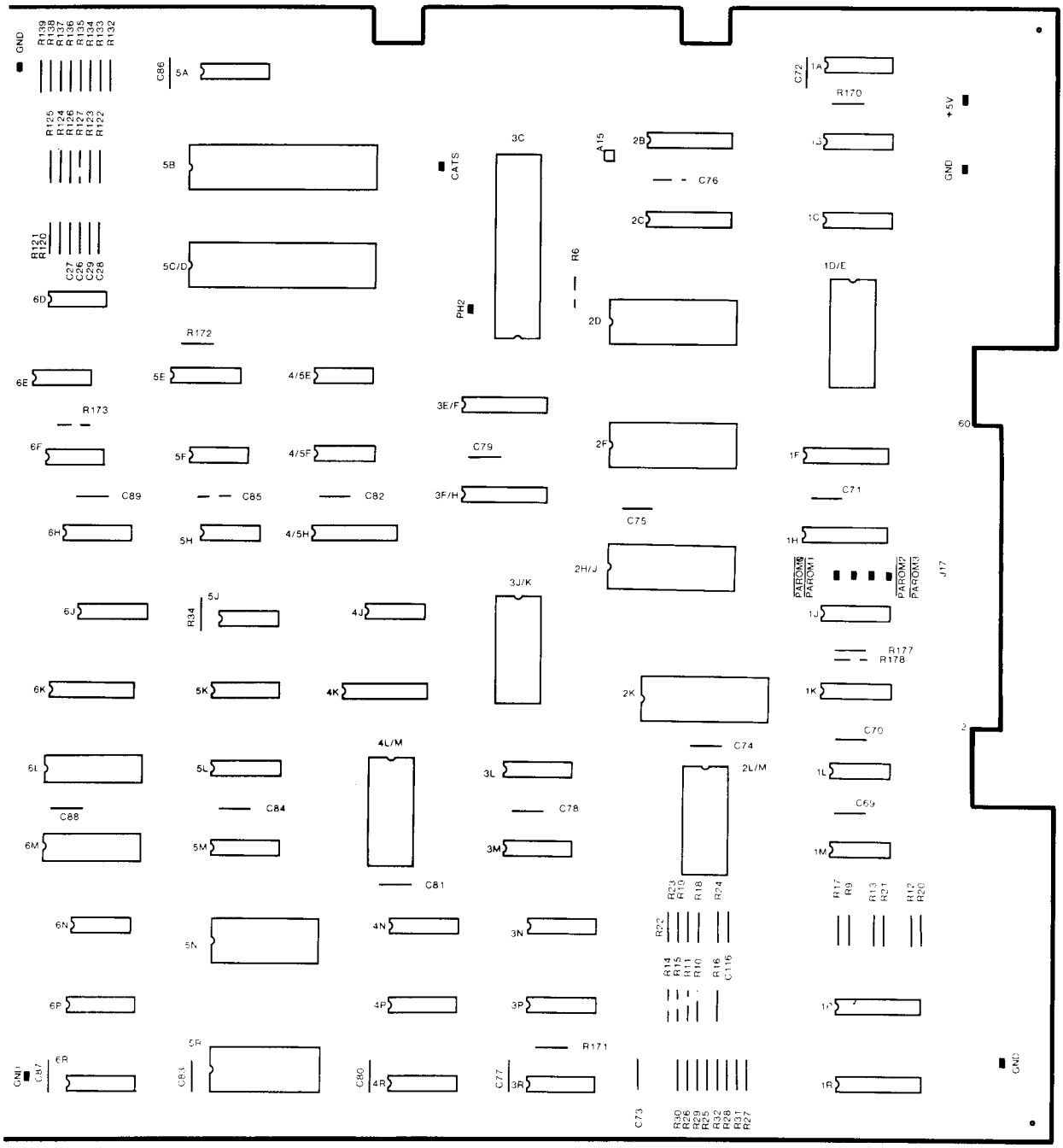

Figure 4-7 CLOAK & DAGGER Master PCB Assembly, continued
A039942-21 A

CLOAK & DAGGER Master PCB Assembly
Parts List

Designator	Description	Part No.
	Capacitors	
C1–C9	0.1 μF, +80% -20%, 50 V, Ceramic Capacitor	122002-104
C30	0.01 μF, 100 V, Radial-Lead Mylar Capacitor	21-101103
C31	0.047 μF, 100 V, Radial-Lead Mylar Capacitor	21-101473
C33	0.022 μF, 100 V, Radial-Lead Mylar Capacitor	21-101223
C35	10 μF, 25 V, Axial-Lead Aluminum Electrolytic Capacitor (Acceptable substitute is part no. 24-350106)	24-250106
C36–C38	0.1 μF, ±10%, 25 V, Ceramic Capacitor	122002-104
C39	0.01 μF, 100 V, Radial-Lead Mylar Capacitor	21-101103
C40	0.022 μF, 100 V, Radial-Lead Mylar Capacitor	21-101223
C42	0.022 μF, 100 V, Radial-Lead Mylar Capacitor	21-101223
C44	1.0 μF, 50 V, Axial-Lead Aluminum Electrolytic Capacitor	24-500105
C45	10 μF, 25 V, Axial-Lead Aluminum Electrolytic Capacitor (Acceptable substitute is part no. 24-350106)	24-250106
C46	100 μF, 25 V, Axial-Lead Aluminum Electrolytic Capacitor	24-250107
C47	0.1 μF, ±10%, 25 V, Ceramic Capacitor	122002-104
C51–C53	0.001 μF, 100 V, Radial-Lead Mylar Capacitor	21-101102
C54, C55	10 μF, 25 V, Axial-Lead Aluminum Electrolytic Capacitor (Acceptable substitute is part no. 24-350106)	24-250106
C56, C57	100 μF, 35 V, Axial-Lead Aluminum Electrolytic Capacitor (Acceptable substitute is part no. 124001-107)	24- 350107
C60	0.1 μF, ±10%, 25 V, Ceramic Capacitor	122002-104
C64–C66	100 pF, 100 V Minimum, Dipped Fixed Mica Capacitor	128002-101
C67–C109	0.1 μF, ±10%, 25 V, Ceramic Capacitor	122002-104
C111, C112	0.1 μF, ±10%, 25 V, Ceramic Capacitor	122002-104
C113	100 μF, 25 V, Axial-Lead Aluminum Electrolytic Capacitor	24-250107
C114, C115	1.0 μF, 50 V, Axial-Lead Aluminum Electrolytic Capacitor	24-500105
C116	0.1 μF, ±10%, 25 V, Ceramic Capacitor	122002-104
	Coil	
L1–L4	1.0 μH, 830 mA, 29 Ω, ±10% Peaking Coil Inductor	141007-001
	Diodes	
CR1–CR10	100 V Switching Diode	31-1N914
CR11	Red Light-Emitting Diode	38-MV5053
	Integrated Circuits	
1A	Type-74LS157 Quad Data Selector/Multiplexer Integrated Circuit	37-74LS157
1B	Type-74LS157 Quad Data Selector/Multiplexer Integrated Circuit	37-74LS157
1C	Type-74LS157 Quad Data Selector/Multiplexer Integrated Circuit	37-74LS157
1D/E	Type-74LS245 200 ns Tri-State Static RAM Integrated Circuit	137211-120
1F	Type-74LS245 Tri-State Octal Bus Transceiver Integrated Circuit	37-74LS245
1H	Type-74LS245 Tri-State Octal Bus Transceiver Integrated Circuit	37-74LS245
1J	Type-74LS139 Dual 2-4 Decoder/Multiplexer Integrated Circuit	37-74LS139
1L	Type-74LS27 Triple 3-Input NOR Gate Integrated Circuit	37-74LS27
1M	Type-74LS86 Quad 2-Input EXOR Gate Integrated Circuit	37-74LS86
1P	Type-74LS244 Line Driver/Receiver Integrated Circuit	37-74LS244
1R	Type-74LS244 Line Driver/Receiver Integrated Circuit	37-74LS244
2B	Type-74LS244 Line Driver/Receiver Integrated Circuit	37-74LS244

(continued on next page)

CLOAK & DAGGER Master PCB Assembly Parts List, continued

Designator	Description	Part No.
2C	Type-74LS244 Line Driver/Receiver Integrated Circuit	37-74LS244
2D	EPROM Integrated Circuit	136023-301
2F	EPROM Integrated Circuit	136023-302
2H/J	EPROM Integrated Circuit	136023-303
2K	EPROM Integrated Circuit	136023-304
2L/M	Vertical Scroll Integrated Circuit	137321-1111
3C	Type-6502B 8-Bit Microprocessor Integrated Circuit	90-6012
3E/F	Type-74LS245 Tri-State Octal Bus Transceiver Integrated Circuit	37-74LS245
3F/H	Type-74LS245 Tri-State Octal Bus Transceiver Integrated Circuit	37-74LS245
3J/K	EPROM Integrated Circuit	137329-450
3L	Type-74LS157 Quad Data Selector/Multiplexer Integrated Circuit	37-74LS157
3M	Type-74LS157 Quad Data Selector/Multiplexer Integrated Circuit	37-74LS157
3N	Type-74LS157 Quad Data Selector/Multiplexer Integrated Circuit	37-74LS157
3P	Type-74LS194 Shift Register Integrated Circuit	37-74LS194
3R	Type-74LS194 Shift Register Integrated Circuit	37-74LS194
4/5E	Type-74LS04 Hex Inverter Integrated Circuit	37-74LS04
4/5F	Type-74LS00 Quad 2-Input NAND Gate Integrated Circuit	37-74LS00
4/5H	Type-74LS245 Tri-State Octal Bus Transceiver Integrated Circuit	37-74LS245
4J	Type-74LS08 Quad 2-Input AND Gate Integrated Circuit	37-74LS08
4K	Type-74LS273 Octal D-Type Flip-Flop Integrated Circuit	37-74LS273
4L/M	200 ns Tri-State Static RAM Integrated Circuit	137211-120
4N	Type-74LS157 Quad Data Selector/Multiplexer Integrated Circuit	37-74LS157
4P	Type-74LS194 Shift Register Integrated Circuit	37-74LS194
4R	Type-74LS194 Shift Register Integrated Circuit	37-74LS194
5B	Custom Integrated Circuit	C012294-01
5C/D	Custom Integrated Circuit	C012294-01
5E	Type-74LS04 Hex Inverter Integrated Circuit	37-74LS04
5E	Type-74LS138 Integrated Circuit	37-74LS138
5F	Type-74LS32 Quad 2-Input OR Gate Integrated Circuit	37-74LS32
5H	Type-74LS245 Tri-State Octal Bus Transceiver Integrated Circuit	37-74LS245
5J	Type-74LS20 Dual 4-Input NAND Gate Integrated Circuit	37-74LS20
5K	Type-74LS83 4-Bit Bin Full Adder Integrated Circuit	37-74LS83
5L	Type-74LS157 Quad Data Selector/Multiplexer Integrated Circuit	37-74LS157
5M	Type-74LS157 Quad Data Selector/Multiplexer Integrated Circuit	37-74LS157
5N	EPROM Integrated Circuit	136023-306
5R	EPROM Integrated Circuit	136023-305
6D	Type-74LS393 Dual 4-Bit Bin Counter Integrated Circuit	37-74LS393
6E	Type-74LS32 Quad 2-Input OR Gate Integrated Circuit	37-74LS32
6F	Type-74LS74 Dual D-Type Flip-Flop Integrated Circuit	37-74LS74
6H	Type-74LS174 Hex D-Type Flip-Flop Integrated Circuit	37-74LS174
6J	Type-74LS83 4-Bit Bin Full Adder Integrated Circuit	37-74LS83
6K	Type-74LS273 Octal D-Type Flip-Flop Integrated Circuit	37-74LS273
6L	250 ns Tri-State Static RAM Integrated Circuit	137250-001
6M	250 ns Tri-State Static RAM Integrated Circuit	137250-001
6N	Type-74LS32 Quad 2-Input OR Gate Integrated Circuit	37-74LS32
6P	Type-74LS194 Shift Register Integrated Circuit	37-74LS194
6R	Type-74LS194 Shift Register Integrated Circuit	37-74LS194
7A	Type-74LS14 Hex Inverter Schmitt-Trigger Integrated Circuit	37-74LS14

(continued on next page)

CLOAK & DAGGER Master PCB Assembly
Parts List, continued

Designator	Description	Part No.
7B	Type-74LS74 Dual D-Type Flip-Flop Integrated Circuit	37-74LS74
7C	Type-74LS00 Quad 2-Input NAND Gate Integrated Circuit	37-74LS00
7D	Type-74LS08 Quad 2-Input AND Gate Integrated Circuit	37-74LS08
7E	Type-74LS74 Dual D-Type Flip-Flop Integrated Circuit	37-74LS74
7F	Type-74LS74 Dual D-Type Flip-Flop Integrated Circuit	37-74LS74
7H	Type-74LS244 Line Driver/Receiver Integrated Circuit	37-74LS244
7J	Type-74LS163A 4-Bit Synchronous Counter Integrated Circuit	37-74LS163A
7K	Type-74LS163A 4-Bit Synchronous Counter Integrated Circuit	37-74LS163A
7L	Type-74LS163A 4-Bit Synchronous Counter Integrated Circuit	37-74LS163A
7M	Type-74LS163A 4-Bit Synchronous Counter Integrated Circuit	37-74LS163A
7N	Type-74LS157 Quad Data Selector/Multiplexer Integrated Circuit	37-74LS157
7P	Type-74LS194 Shift Register Integrated Circuit	37-74LS194
7R	Type-74LS194 Shift Register Integrated Circuit	37-74LS194
8A	Type-74LS74 Dual D-Type Flip-Flop Integrated Circuit	37-74LS74
8B	Type-74LS32 Quad 2-Input OR Gate Integrated Circuit	37-74LS32
8C	Type-74S04 Hex Inverter Integrated Circuit	37-74S04
8D	Type-74LS32 Quad 2-Input OR Gate Integrated Circuit	37-74LS32
8E	Type-74LS00 Quad 2-Input NAND Gate Integrated Circuit	37-74LS00
8F	Type-74LS139 Dual 2-4 Decoder/Multiplexer Integrated Circuit	37-74LS139
8H	Type-74LS273 Octal D-Type Flip-Flop Integrated Circuit	37-74LS273
8J	Type-93422 45 ns Tri-State Bipolar Static RAM Integrated Circuit (Acceptable substitute is part no. 137178-001)	137178-002
8K	Type-74LS157 Quad Data Selector/Multiplexer Integrated Circuit	37-74LS157
8L	Type-93422 45 ns Tri-State Bipolar Static RAM Integrated Circuit	137178-002
8M	Type-74LS157 Quad Data Selector/Multiplexer Integrated Circuit	37-74LS157
8N	EPROM Integrated Circuit	136023-307
8R	EPROM Integrated Circuit	136023-308
9A	Type-74LS109A Integrated Circuit	37-74LS109A
9B	Type-74LS02 Quad 2-Input NOR Gate Integrated Circuit	37-74LS02
9C	Type-74LS20 Dual 4-Input NAND Gate Integrated Circuit	37-74LS20
9D	Type-74LS74 Dual D-Type Flip-Flop Integrated Circuit	37-74LS74
9E	Type-74LS139 Dual 2-4 Decoder/Multiplexer Integrated Circuit	37-74LS139
9F	Type-74LS08 Quad 2-Input AND Gate Integrated Circuit	37-74LS08
9H	Type-74S157 Quad Data Selector/Multiplexer Integrated Circuit	37-74S157
9J	Type-74LS273 Octal D-Type Flip-Flop Integrated Circuit	37-74LS273
9K	Type-74S260 Dual 5-Input NOR Gate Integrated Circuit	37-74S260
9L/M	Open Collector Bipolar RAM Integrated Circuit	137322-001
9N	Type-74LS244 Line Driver/Receiver Integrated Circuit	37-74LS244
9R	Type-74LS244 Line Driver/Receiver Integrated Circuit	37-74LS244
10A	Type-7407 Hex Buffer/Driver Integrated Circuit	37-7407
10B	Type-74LS259 8-Bit Latch Integrated Circuit	37-74LS259
10C	Type-74LS00 Quad 2-Input NAND Gate Integrated Circuit	37-74LS00
10D	Type-74LS00 Quad 2-Input NAND Gate Integrated Circuit	37-74LS00
10E	Type-74LS04 Hex Inverter Integrated Circuit	37-74LS04
10F	Type-74LS86 Quad 2-Input Exclusive OR Gate Integrated Circuit	37-74LS86
10H	Type-74LS153 4 to 1 Data Selector/Multiplexer Integrated Circuit	37-74LS153
10J	Type-74LS153 4 to 1 Data Selector/Multiplexer Integrated Circuit	37-74LS153
10K	Type-74LS174 Hex D-Type Flip-Flop Integrated Circuit	37-74LS174

(continued on next page)

CLOAK & DAGGER Master PCB Assembly
Parts List, continued

Designator	Description	Part No.
10L	Type-74LS174 Hex D-Type Flip-Flop Integrated Circuit	37-74LS174
11C	Type-74LS74 Dual D-Type Flip-Flop Integrated Circuit	37-74LS74
11D	Type-74LS08 Quad 2-Input AND Gate Integrated Circuit	37-74LS08
11F	Type-74LS74 Dual D-Type Flip-Flop Integrated Circuit	37-74LS74
11H	Type-74LS139 Dual 2-4 Decoder/Multiplexer Integrated Circuit	37-74LS139
11J	Type-74LS157 Quad Data Selector/Multiplexer Integrated Circuit	37-74LS157
12B	Type-LM324 Quad Op-Amp Integrated Circuit	37-LM324
13B	512-Element Analog Delay Line Integrated Circuit	137310-001
13C/D	Type-LM324 Quad Op-Amp Integrated Circuit	37-LM324
13J	Type-TL082 Dual Operational Amplifier Integrated Circuit	37-TL082CP
	Resistors	
R1	10 kΩ, ±5%, ¼ W Resistor	110000-103
R2	68 kΩ, ±5%, ¼ W Resistor	110000-683
R3	220 Ω, ±5%, ¼ W Resistor	110000-221
R4	22 kΩ, ±5%, ¼ W Resistor	110000-223
R5	1 kΩ, ±5%, ¼ W Resistor	110000-102
R6–R8	10 kΩ, ±5%, ¼ W Resistor	110000-103
R9–R16	220 Ω, ±5%, ¼ W Resistor	110000-221
R17–R24	330 Ω, ±5%, ¼ W Resistor	110000-331
R25–R28	220 Ω, ±5%, ¼ W Resistor	110000-221
R29–R32	330 Ω, ±5%, ¼ W Resistor	110000-331
R33, R34	10 kΩ, ±5%, ¼ W Resistor	110000-103
R35–R41	470 Ω, ±5%, ¼ W Resistor	110000-471
R42–R48	1 kΩ, ±5%, ¼ W Resistor	110000-102
R65–R72	470 Ω, ±5%, ¼ W Resistor	110000-471
R73–R89	1 kΩ, ±5%, ¼ W Resistor	110000-102
R92–R94	1 kΩ, ±5%, ¼ W Resistor	110000-102
R95	2.2 kΩ, ±5%, ¼ W Resistor	110000-222
R96	4.7 kΩ, ±5%, ¼ W Resistor	110000-472
R97	10 kΩ, ±5%, ¼ W Resistor	110000-103
R98, R99	100 Ω, ±5%, ¼ W Resistor	110000-101
R100–R102	1 kΩ, ±5%, ¼ W Resistor	110000-102
R103	2.2 kΩ, ±5%, ¼ W Resistor	110000-222
R104	4.7 kΩ, ±5%, ¼ W Resistor	110000-472
R105	10 kΩ, ±5%, ¼ W Resistor	110000-103
R106, R107	100 Ω, ±5%, ¼ W Resistor	110000-101
R108–R110	1 kΩ, ±5%, ¼ W Resistor	110000-102
R111	2.2 kΩ, ±5%, ¼ W Resistor	110000-222
R112	4.7 kΩ, ±5%, ¼ W Resistor	110000-472
R113	10 kΩ, ±5%, ¼ W Resistor	110000-103
R114, R115	100 Ω, ±5%, ¼ W Resistor	110000-101
R116	1 kΩ, ±5%, ¼ W Resistor	110000-102
R117	10 kΩ, ±5%, ¼ W Resistor	110000-103
R118	18 kΩ, ±5%, ¼ W Resistor	110000-180
R119	100 kΩ, ±5%, ¼ W Resistor	110000-104
R120–R123	1 kΩ, ±5%, ¼ W Resistor	110000-102
R124–R127	470 Ω, ±5%, ¼ W Resistor	110000-471

(continued on next page)

CLOAK & DAGGER Master PCB Assembly
Parts List, continued

Designator	Description	Part No.
R128, R129	220 Ω, ±5%, ¼ W Resistor	110000-221
R130, R131	1 kΩ, ±5%, ¼ W Resistor	110000-102
R132–R139	10 kΩ, ±5%, ¼ W Resistor	110000-103
R140	1 kΩ, ±5%, ¼ W Resistor	110000-102
R141, R142	1.8 kΩ, ±5%, ¼ W Resistor	110000-182
R150–R152	22 kΩ, ±5%, ¼ W Resistor	110000-223
R153	2.2 kΩ, ±5%, ¼ W Resistor	110000-222
R154	68 kΩ, ±5%, ¼ W Resistor	110000-683
R155	1.5 kΩ, ±5%, ¼ W Resistor	110000-152
R156	12 kΩ, ±5%, ¼ W Resistor	110000-123
R157	100 Ω, ±5%, ¼ W Resistor	110000-101
R158	180 kΩ, ±5%, ¼ W Resistor	110000-184
R159	15 kΩ, ±5%, ¼ W Resistor	110000-153
R162	15 kΩ, ±5%, ¼ W Resistor	110000-153
R163–R166	22 kΩ, ±5%, ¼ W Resistor	110000-223
R167	2.2 kΩ, ±5%, ¼ W Resistor	110000-222
R169	150 Ω, ±5%, ¼ W Resistor	110000-151
R170–R176	1 kΩ, ±5%, ¼ W Resistor	110000-102
R177	220 Ω, ±5%, ¼ W Resistor	110000-221
R178	330 Ω, ±5%, ¼ W Resistor	110000-331
R179	220 Ω, ±5%, ¼ W Resistor	110000-221
R180	330 Ω, ±5%, ¼ W Resistor	110000-331
R181	100 Ω, ±5%, ¼ W Resistor	110000-101
R182, R183	6.8 kΩ, ±5%, ¼ W Resistor	110000-682
R184	10 kΩ, ±5%, ¼ W Resistor	110000-103
	Sockets	
1D/E	24 Contact, Medium-Insertion-Force IC Socket	79-42C24
2D	28 Contact, Medium-Insertion-Force IC Socket	79-42C28
2F	28 Contact, Medium-Insertion-Force IC Socket	79-42C28
2H/J	28 Contact, Medium-Insertion-Force IC Socket	79-42C28
2K	28 Contact, Medium-Insertion-Force IC Socket	79-42C28
2L/M	24 Contact, Medium-Insertion-Force IC Socket	79-42C24
3C	40 Contact, Medium-Insertion-Force IC Socket	79-42C40
3J/K	24 Contact, Medium-Insertion-Force IC Socket	79-42C24
4L/M	24 Contact, Medium-Insertion-Force IC Socket	79-42C24
5B	40 Contact, Medium-Insertion-Force IC Socket	79-42C40
5C/D	40 Contact, Medium-Insertion-Force IC Socket	79-42C40
5N	24 Contact, Medium-Insertion-Force IC Socket	79-42C24
5R	24 Contact, Medium-Insertion-Force IC Socket	79-42C24
6L	22 Contact, Medium-Insertion-Force IC Socket	79-42C22
6M	22 Contact, Medium-Insertion-Force IC Socket	79-42C22
8J	22 Contact, Medium-Insertion-Force IC Socket	79-42C22
8L	22 Contact, Medium-Insertion-Force IC Socket	79-42C22
8N	24 Contact, Medium-Insertion-Force IC Socket	79-42C24
8R	24 Contact, Medium-Insertion-Force IC Socket	79-42C24
9L/M	28 Contact, Medium-Insertion-Force IC Socket	79-42C28

(continued on next page)

CLOAK & DAGGER Master PCB Assembly
Parts List, continued

Designator	Description	Part No.
	Switch	
5A	8-Toggle DIP Switch	66-118PIT
	Transistors	
Q1–Q3	350 mW, 60 V, Switching NPN Transistor	34-2N3904
Q4, Q5	8A, 80 V, NPN Darlington Transistor	34-2N6044
	Miscellaneous	
	Test Points (Acceptable substitute is part no. 020670-01)	179051-002
	Interconnect Printed-Circuit Board—includes 60-pin connector, part no. 179153-160	A039431-01

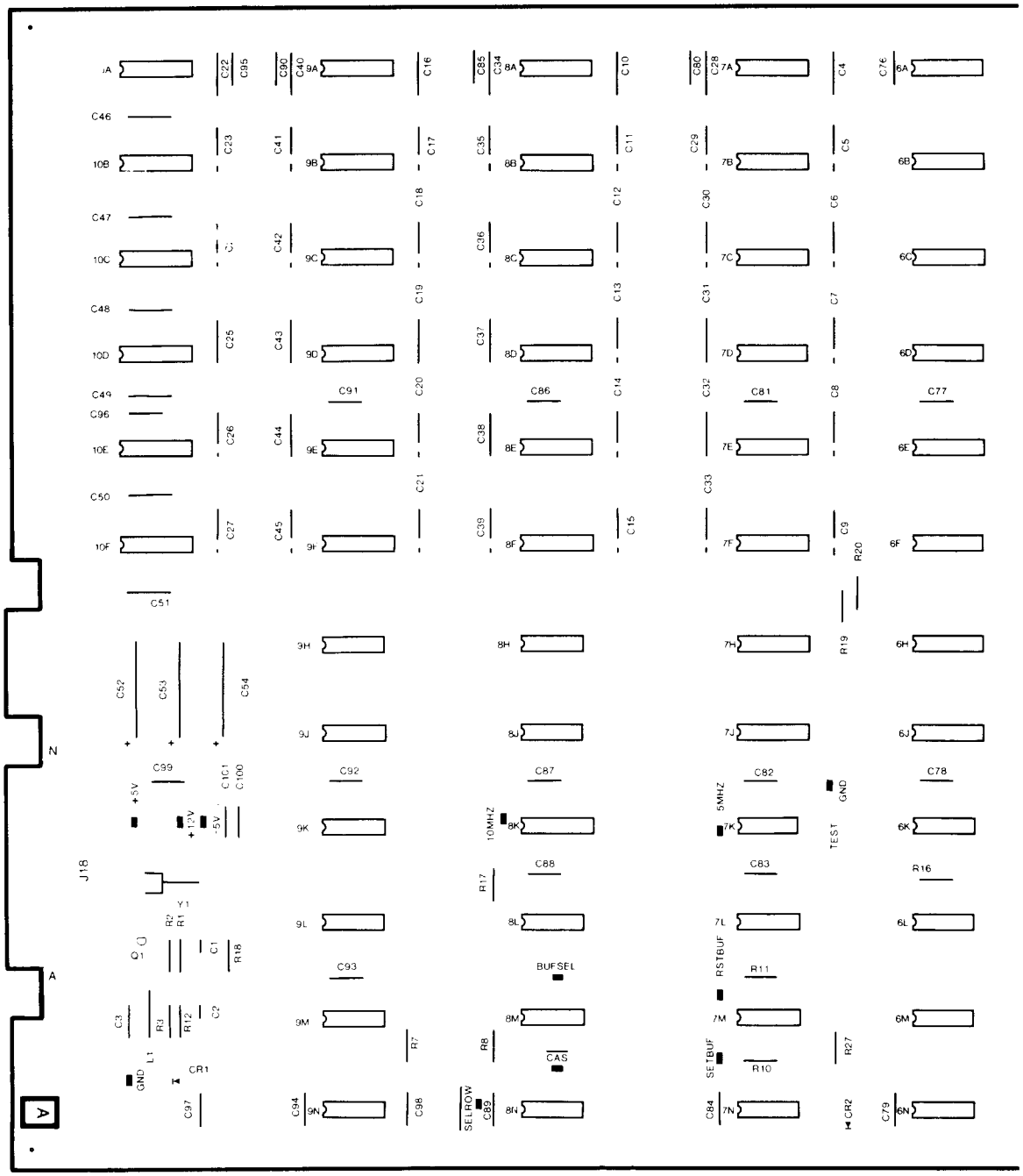

Figure 4-8 CLOAK & DAGGER Slave PCB Assembly A039938-21 A

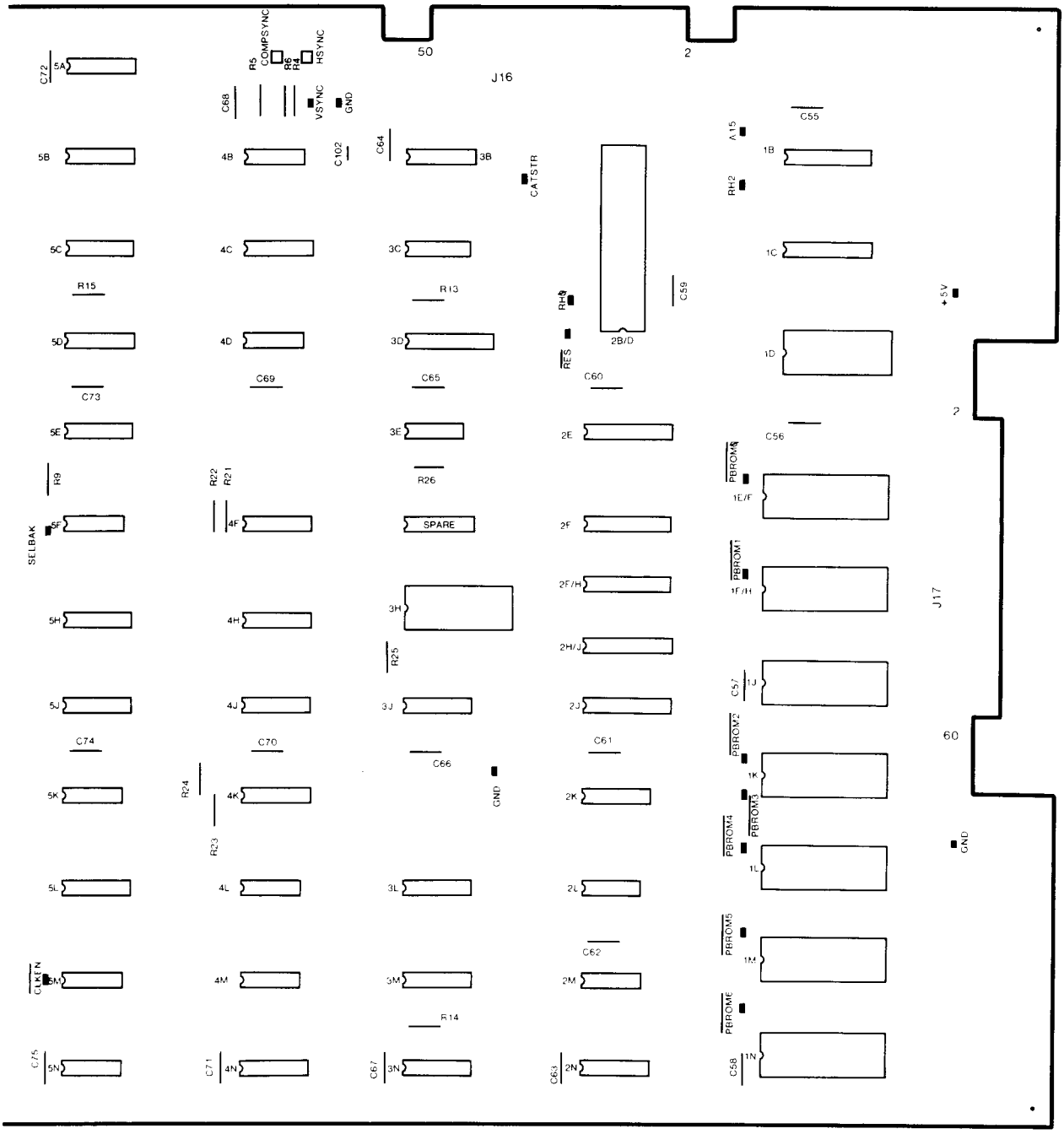

Figure 4-8 CLOAK & DAGGER Slave PCB Assembly, continued
A039938-21 A

CLOAK & DAGGER Slave PCB Assembly Parts List

Designator	Description	Part No.
	Capacitors	
C1	100 pF, 100 V, Dipped Fixed Mica Capacitor	128002-101
C2	39 pF, 100 V, Dipped Fixed Mica Capacitor	128002-390
C3	0.1 μF, 50 V, ±10%, Ceramic Capacitor	122002-104
C4–C51	0.22 μF, 25 V, ±20%, Axial-Lead Ceramic Capacitor	122004-224
C52–C54	100 μF, 35 V, Axial-Lead Aluminum Electrolytic Capacitor (Acceptable substitute is part no. 124001-107)	24-350107
C55–C101	0.1 μF, 50 V, ±10%, Ceramic Capacitor	122002-104
	Coil	
L1	100 uH, ±10% Inductor	141002-001
	Diodes	
CR1, CR2	Red Light-Emitting Diode	38-MV5053
	Integrated Circuits	
1B	Type-74LS244 Line Driver/Receiver Integrated Circuit	37-74LS244
1C	Type-74LS244 Line Driver/Receiver Integrated Circuit	37-74LS244
1D	Static RAM Integrated Circuit	137211-120
1E/F	PROM Integrated Circuit	136023-309
1F/H	PROM Integrated Circuit	136023-310
1J	PROM Integrated Circuit	136023-311
1K	PROM Integrated Circuit	136023-312
1L	PROM Integrated Circuit	136023-313
1M	PROM Integrated Circuit	136023-314
1N	PROM Integrated Circuit	136023-315
2B/D	8-Bit Microprocessor Integrated Circuit	90-6012
2E	Type-74LS245 Tri-State Octal Bus Transceiver Integrated Circuit	37-74LS245
2F/H	Type-74LS244 Line Driver/Receiver Integrated Circuit	37-74LS244
2F	Type-74LS245 Tri-State Octal Bus Transceiver Integrated Circuit	37-74LS245
2H/J	Type-74LS245 Tri-State Octal Bus Transceiver Integrated Circuit	37-74LS245
2J	Type-74LS374 Octal D-Type Flip-Flop Integrated Circuit	37-74LS374
2K	Type-74LS138 3-8 Line Decoder/Multiplexer Integrated Circuit	137177-001
2L	Type-74LS08 Quad 2-Input AND Gate Integrated Circuit	37-74LS08
2M	Type-74S260 Dual 5-Input NOR Gate Integrated Circuit	37-74S260
2N	Type-74LS163A 4-Bit Synchronous Counter Integrated Circuit	37-74LS163A
3B	Type-74LS74 Dual D-Type Flip-Flop Integrated Circuit	37-74LS74
3C	Type-74LS244 Dual D-Type Flip-Flop Integrated Circuit	37-74LS74
3D	Line Driver/Receiver Integrated Circuit	37-74LS244
3E	Type-74LS04 Hex Inverter Integrated Circuit	37-74LS04
3H	Custom Integrated Circuit	137321-1111
3J	Type-74153 Dual Data Selector/Multiplexer Integrated Circuit	37-74153
3L	Type-74LS139 Dual 2-4 Decoder/Multiplexer Integrated Circuit	37-74LS139
3M	Type-74LS163A 4-Bit Synchronous Counter Integrated Circuit	37-74LS163A
3N	PROM Integrated Circuit	136023-116
4B	Type-7406 Buffer/Driver, Hex Inverter Integrated Circuit	37-7406
4C	Type-74LS163A 4-Bit Synchronous Counter Integrated Circuit	37-74LS163A

(continued on next page)

CLOAK & DAGGER Slave PCB Assembly
Parts List, continued

Designator	Description	Part No.
4D	Type-74LS86 Quad 2-Input EXOR Gate Integrated Circuit	37-74LS86
4F	Type-74153 Dual Data Selector/Multiplexer Integrated Circuit	37-74153
4H	Type-74LS169A Up/Down Binary, Synchronous 4-Bit Counter Integrated Circuit	137109-001
4J	Type-74LS169A Up/Down Binary, Synchronous 4-Bit Counter Integrated Circuit	137109-001
4K	Type-74153 Dual Data Selector/Multiplexer Integrated Circuit	37-74153
4L	Type-74LS32 Quad 2-Input OR Gate Integrated Circuit	37-74LS32
4M	Type-74LS74 Dual D-Type Flip-Flop Integrated Circuit	37-74LS74
4N	Type-74LS175 Quad D-Type Flip-Flop Integrated Circuit	37-74LS175
5A	Type-74LS194 Shift Register Integrated Circuit	37-74LS194
5B	Type-74LS157 Quad Data Selector/Multiplexer Integrated Circuit	37-74LS157
5C	Type-74LS160 4-Bit/Binary Counter Integrated Circuit	37-74LS160
5D	Type-74LS194 Shift Register Integrated Circuit	37-74LS194
5E	Type-74LS194 Shift Register Integrated Circuit	37-74LS194
5F	Type-74LS86 Quad 2-Input EXOR Gate Integrated Circuit	37-74LS86
5H	Type-74LS169A Up/Down Binary, Synchronous 4-Bit Counter Integrated Circuit	137109-001
5J	Type-74LS169A Up/Down Binary, Synchronous 4-Bit Counter Integrated Circuit	137109-001
5K	Type-74LS04 Hex Inverter Integrated Circuit	37-74LS04
5L	Type-74LS109A Integrated Circuit	37-74LS109A
5M	Type-74LS00 Quad 2-Input NAND Gate Integrated Circuit	37-74LS00
5N	Type-74LS32 Quad 2-Input OR Gate Integrated Circuit	37-74LS32
6A	Type-74LS157 Quad Data Selector/Multiplexer Integrated Circuit	37-74LS157
6B	Type-74LS151 1-8 Data Selector/Multiplexer Integrated Circuit	37-74LS151
6C	Type-74LS151 1-8 Data Selector/Multiplexer Integrated Circuit	37-74LS151
6D	Type-74LS157 Quad Data Selector/Multiplexer Integrated Circuit	37-74LS157
6E	Type-74LS157 Quad Data Selector/Multiplexer Integrated Circuit	37-74LS157
6F	Type-74LS151 1-8 Data Selector/Multiplexer Integrated Circuit	37-74LS151
6H	Type-74LS139 Dual 2-4 Decoder/Multiplexer Integrated Circuit	37-74LS139
6J	Type-74153 Dual Data Selector/Multiplexer Integrated Circuit	37-74153
6K	Type-74LS00 Quad 2-Input NAND Gate Integrated Circuit	37-74LS00
6L	Type-74LS74 Dual D-Type Flip-Flop Integrated Circuit	37-74LS74
6M	Type-74LS02 Quad 2-Input NOR Gate Integrated Circuit	37-74LS02
6N	Type-74LS08 Quad 2-Input AND Gate Integrated Circuit	37-74LS08
7A–7F	Random-Access-Memory Integrated Circuit	100017-001
7H, 7J	Type-74LS157 Quad Data Selector/Multiplexer Integrated Circuit	37-74LS157
7K	Type-74S00 Quad 2-Input NAND Gate Integrated Circuit	37-74S00
7L	Type-74LS74 Dual D-Type Flip-Flop Integrated Circuit	37-74LS74
7M	Type-74LS74 Dual D-Type Flip-Flop Integrated Circuit	37-74LS74
7N	Type-74LS00 Quad 2-Input NAND Gate Integrated Circuit	37-74LS00
8A–8F	Type-4116 Random-Access-Memory Integrated Circuit	100017-001
8H	Type-74LS02 Quad 2-Input NOR Gate Integrated Circuit	37-74LS02
8J	Type-74LS02 Quad 2-Input NOR Gate Integrated Circuit	37-74LS02
8K	Type-74109 Dual J-K Flip-Flop Integrated Circuit	37-74109
8L	Type-74LS32 Quad 2-Input OR Gate Integrated Circuit	37-74LS32
8M	Type-74LS00 Quad 2-Input NAND Gate Integrated Circuit	37-74LS00
8N	Type-74S74 Dual D-Type Flip-Flop Integrated Circuit	37-74S74

(continued on next page)

CLOAK & DAGGER Slave PCB Assembly Parts List, continued

Designator	Description	Part No.
9A–9F	Type-4116 Random-Access-Memory Integrated Circuit	100017-001
9H, 9J	Type-74LS02 Quad 2-Input NOR Gate Integrated Circuit	37-74LS02
9K	Type-74LS74 Dual D-Type Flip-Flop Integrated Circuit	37-74LS74
9L	Type-74LS02 Quad 2-Input NOR Gate Integrated Circuit	37-74LS02
9M	Type-74S04 Hex Inverter Integrated Circuit	37-74S04
9N	Type-74S74 Dual D-Type Flip-Flop Integrated Circuit	37-74S74
10A–10F	Type-4116 Random-Access-Memory Integrated Circuit	100017-001
	Resistors	
R1, R2	10 kΩ, ±5%, ¼ W Resistor	110000-103
R3	220 Ω, ±5%, ¼ W Resistor	110000-221
R4–R6	470 Ω, ±5%, ¼ W Resistor	110000-471
R7, R8	27 Ω, ±5%, ¼ W Resistor	110000-270
R9–R11	10 kΩ, ±5%, ¼ W Resistor	110000-103
R12	150 Ω, ±5%, ¼ W Resistor	110000-151
R13–R17	1 kΩ, ±5%, ¼ W Resistor	110000-102
R18	470 Ω, ±5%, ¼ W Resistor	110000-471
R19–R25	27 Ω, ±5%, ¼ W Resistor	110000-270
R26	10 kΩ, ±5%, ¼ W Resistor	110000-103
R27	100 Ω, ±5%, ¼ W Resistor	110000-101
	Sockets	
1D	24 Contact, Medium-Insertion-Force IC Socket	79-42C24
1E/F	28 Contact, Medium-Insertion-Force IC Socket	79-42C28
1F/H	28 Contact, Medium-Insertion-Force IC Socket	79-42C28
1J	28 Contact, Medium-Insertion-Force IC Socket	79-42C28
1K	28 Contact, Medium-Insertion-Force IC Socket	79-42C28
1L	28 Contact, Medium-Insertion-Force IC Socket	79-42C28
1M	28 Contact, Medium-Insertion-Force IC Socket	79-42C28
1N	28 Contact, Medium-Insertion-Force IC Socket	79-42C28
2B/D	40 Contact, Medium-Insertion-Force IC Socket	79-42C40
3H	24 Contact, Medium-Insertion-Force IC Socket	79-42C24
	Transistor	
Q1	350 mW, 60 V, Switching NPN Transistor	34-2N3904
	Miscellaneous	
Y1	10 MHz Crystal	90-123
	Test Points (Acceptable substitute is part no. 020670-01)	179051-002

TM-242
1st printing

YOUR COMMENTS, PLEASE!

Your comments will assist Atari in improving our publications. The comments are an important part of preparing for revisions of game manuals. Please write in the space below. No postage stamp is necessary if mailed in the U.S.A.

If you have any technical questions about certain ATARI games products, or are requesting additional publications, we will immediately forward your note to the appropriate person.

Page: Comments:

Fill in if you wish a reply:

Name _____

Firm _____ ☐ Distributor

Address _____ ☐ Operator

City _____ State _____ Zip _____ ☐ Other _____

Area Code _____ Phone _____

CLASSIFIED

FOR INTERNAL USE ONLY



ATARI, INC.
790 SYCAMORE DRIVE
P.O. BOX 906
MILPITAS, CALIFORNIA 95035
408/942-3100 • TELEX 35-7488



Table of Contents

Table of Contents . . . . . Sheet 1A

Master PCB Schematics (039942-02 A), Sheets 1B–5B

Power Input . . . . . Sheet 1B
Master Microprocessor, Master/Slave Interconnect . . . . . Sheet 2A
Communication RAM, Master Program, Non-Volatile RAM . . . . . Sheet 2B
Sync Chain, Working RAM/Playfield RAM . . . . . Sheet 3A
Playfield . . . . . Sheet 3B
Motion Object . . . . . Sheet 4A
Motion Object Buffers, Video . . . . . Sheet 4B
Inputs, R-G-B Output . . . . . Sheet 5A
Outputs, Audio . . . . . Sheet 5B

Slave PCB Schematics (039938-02 A), Sheets 6A–8B

Power Input, Clock . . . . . Sheet 6A
Slave Microprocessor, Slave Processing, Master/Slave Interconnect . . . . . Sheet 6B
Sync Chain, Slave Program ROM, Working RAM, Communication RAM Interconnect . . . . . Sheet 7A
Bit Map Clock, Bit Map Write . . . . . Sheet 7B
Bit Map . . . . . Sheet 8A
Bit Map Output . . . . . Sheet 8B

Cloak and Dagger EMI Shield PCB . . . . . Sheet 9A

Cloak and Dagger Memory Map– Master PCB . . . . . Sheet 9B
Cloak and Dagger Memory Map– Slave PCB . . . . . Sheet 10A

Cloak and Dagger Main Wiring Diagram-Conversion Kit (041401-01 A) . Sheet 10B



NOTE

This staple temporarily holds the schematic package together. Remove the staple before using these schematics.

Schematic Package Supplement to

ATARI®

CLOAK & DAGGER™*

Operators Manual

12M

*A trademark of and licensed by Universal City Studios, Inc.

SP-242 Sheet 1A
1st printing

Power Input

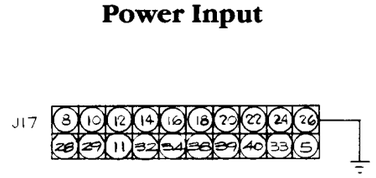

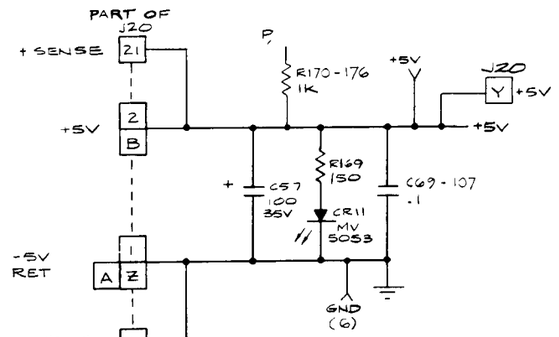

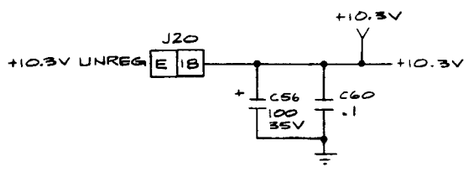

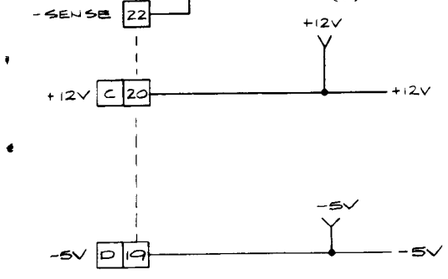

NOTICE TO ALL PERSONS RECEIVING THIS DRAWING

CONFIDENTIAL: Reproduction forbidden without the specific written permission of Atari, Inc., Sunnyvale, CA. This drawing is only conditionally issued, and neither receipt nor possession thereof confers or transfers any right in, or license to use, the subject matter of the drawing or any design or technical information shown thereon, nor any right to reproduce this drawing or any part thereof. Except for manufacture by vendors of Atari, Inc., and for manufacture under the corporation's written license, no right is granted to reproduce this drawing or the subject matter thereof, unless by written agreement with or written permission from the corporation.

Cloak and Dagger
Master PCB Schematic Diagram

ATARI®
A Warner Communications Company

© ATARI INC. 1983

SP-242 Sheet 1B
1st printing

Master Microprocessor

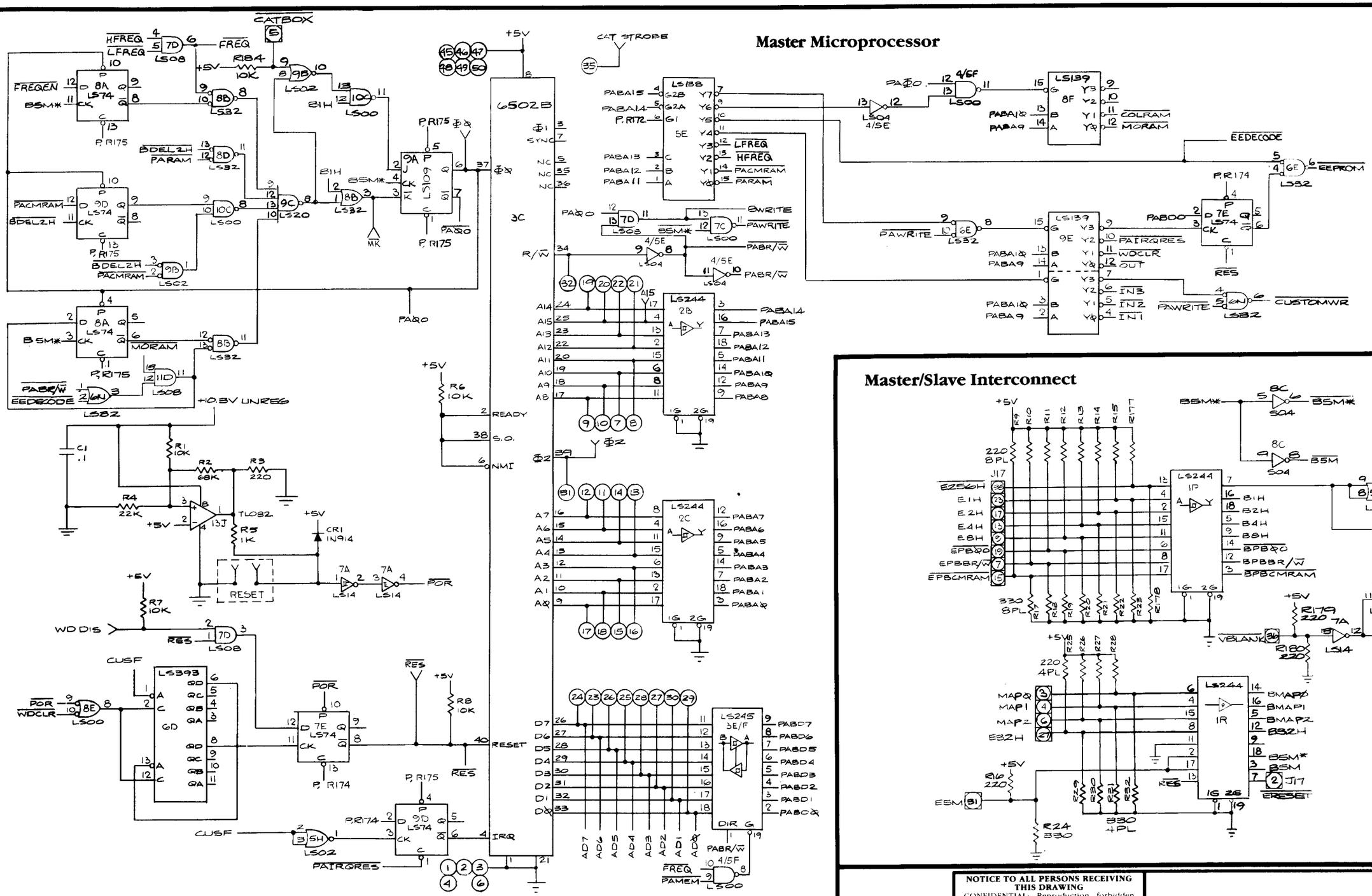

Master/Slave Interconnect

NOTICE TO ALL PERSONS RECEIVING THIS DRAWING

CONFIDENTIAL: Reproduction forbidden without the specific written permission of Atari, Inc., Sunnyvale, CA. This drawing is only conditionally issued, and neither receipt nor possession thereof confers or transfers any right in, or license to use, the subject matter of the drawing or any design or technical information shown thereon, nor any right to reproduce this drawing or any part thereof. Except for manufacture by vendors of Atari, Inc., and for manufacture under the corporation's written license, no right is granted to reproduce this drawing or the subject matter thereof, unless by written agreement with or written permission from the corporation.

Cloak and Dagger
Master PCB Schematic Diagram

ATARI®
A Warner Communications Company

© ATARI INC. 1983

SP-242 Sheet 2A
1st printing

Communication RAM

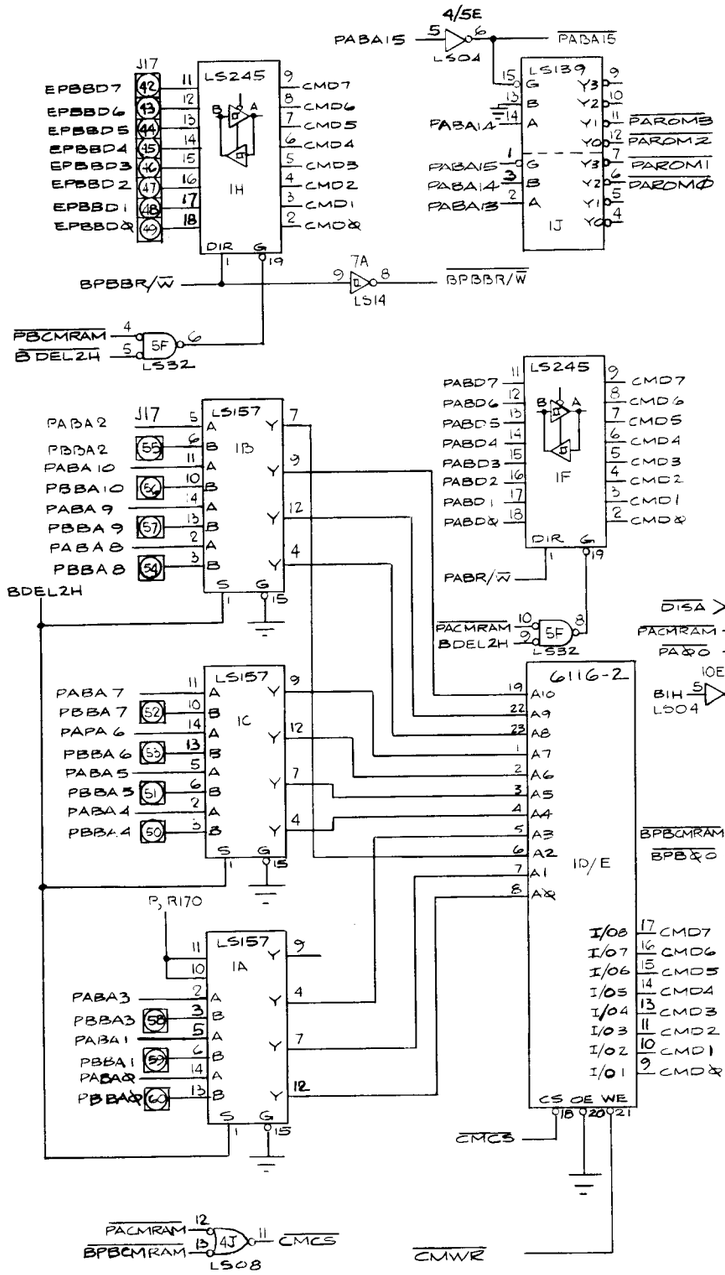

Master Program

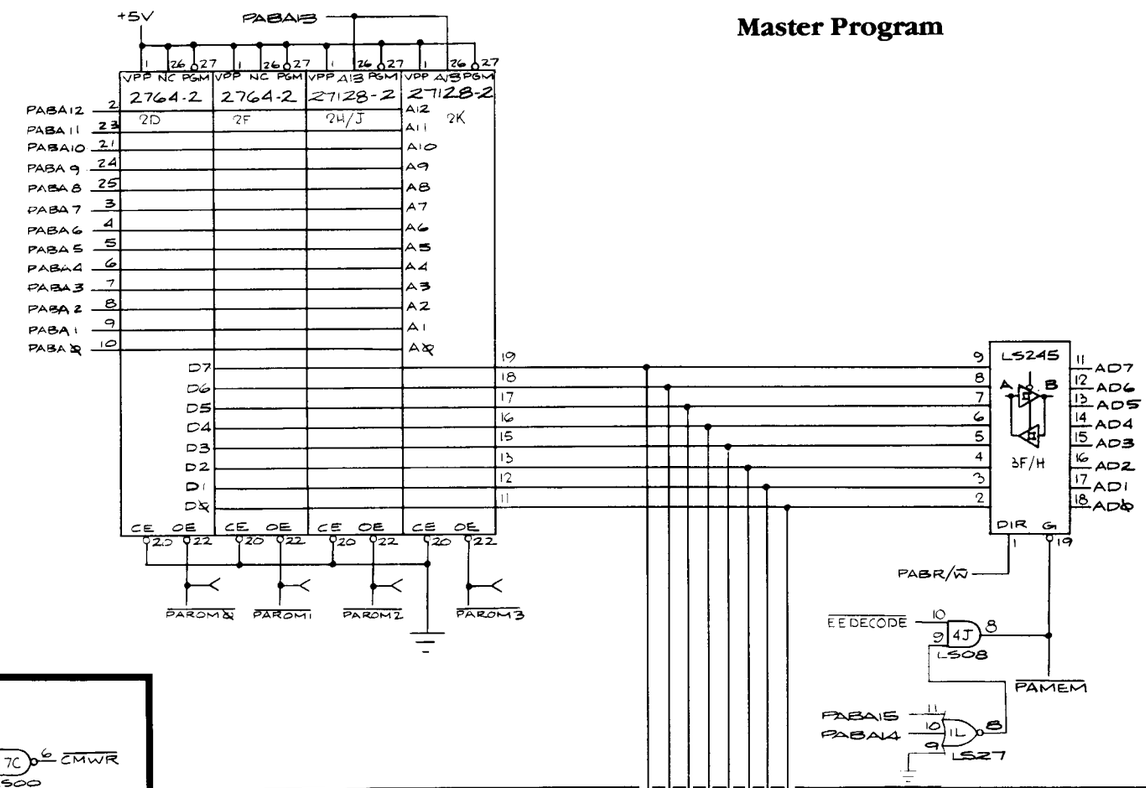

Non-Volatile RAM

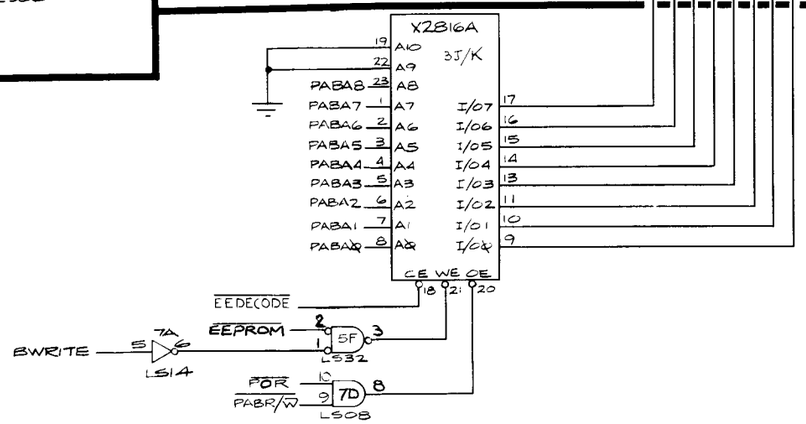

NOTICE TO ALL PERSONS RECEIVING THIS DRAWING

CONFIDENTIAL: Reproduction forbidden without the specific written permission of Atari, Inc., Sunnyvale, CA. This drawing is only conditionally issued, and neither receipt nor possession thereof confers or transfers any right in, or license to use, the subject matter of the drawing or any design or technical information shown thereon, nor any right to reproduce this drawing or any part thereof. Except for manufacture by vendors of Atari, Inc., and for manufacture under the corporation's written license, no right is granted to reproduce this drawing or the subject matter thereof, unless by written agreement with or written permission from the corporation.

Cloak and Dagger
Master PCB Schematic Diaram

ATARI®

A Warner Communications Company

© ATARI INC. 1983

SP-242 Sheet 2B
1st printing

Sync Chain

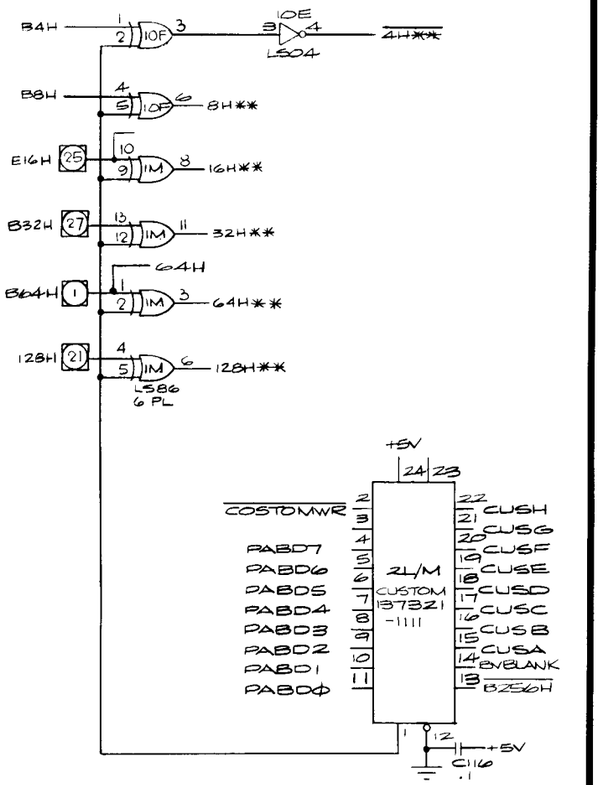

Working RAM/Playfield RAM

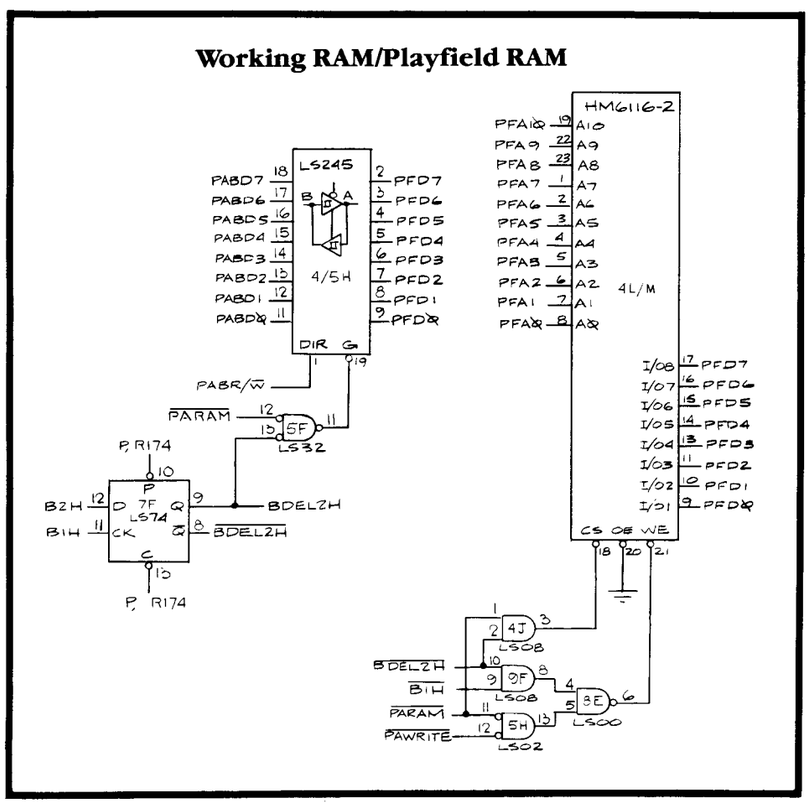

NOTICE TO ALL PERSONS RECEIVING THIS DRAWING

CONFIDENTIAL. Reproduction forbidden without the specific written permission of Atari, Inc., Sunnyvale, CA. This drawing is only conditionally issued, and neither receipt nor possession thereof confers or transfers any right in, or license to use, the subject matter of the drawing or any design or technical information shown thereon, nor any right to reproduce this drawing or any part thereof. Except for manufacture by vendors of Atari, Inc., and for manufacture under the corporation's written license, no right is granted to reproduce this drawing or the subject matter thereof, unless by written agreement with or written permission from the corporation.

Cloak and Dagger
Master PCB Schematic Diagram

ATARI®

A Warner Communications Company

© ATARI INC. 1983

SP-242 Sheet 3A
1st printing

Playfield

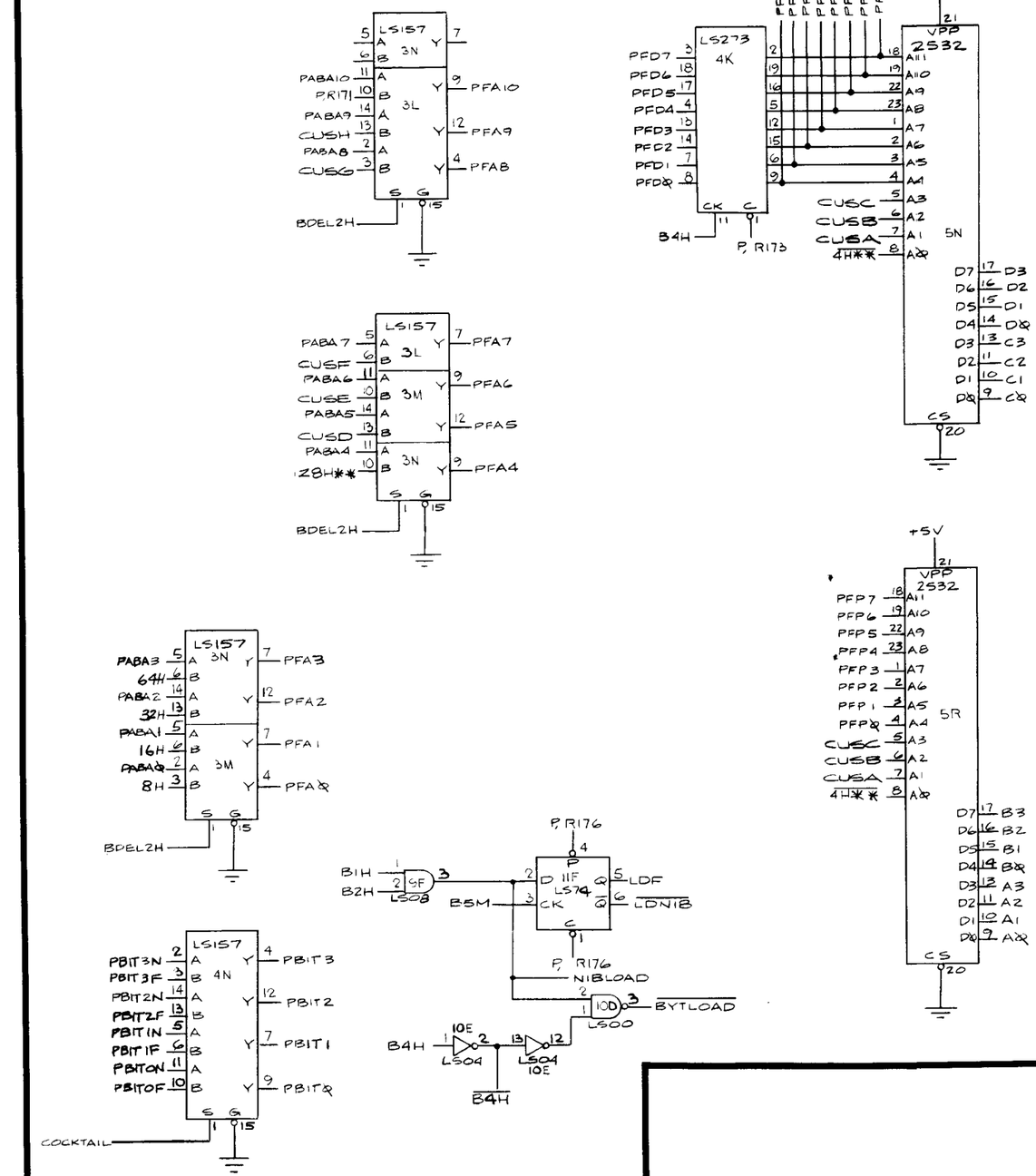

NOTICE TO ALL PERSONS RECEIVING THIS DRAWING

CONFIDENTIAL. Reproduction forbidden without the specific written permission of Atari, Inc., Sunnyvale, CA. This drawing is only conditionally issued, and neither receipt nor possession thereof confers or transfers any right in, or license to use, the subject matter of the drawing or any design or technical information shown thereon, nor any right to reproduce this drawing or any part thereof. Except for manufacture by vendors of Atari, Inc., and for manufacture under the corporation's written license, no right is granted to reproduce this drawing or the subject matter thereof, unless by written agreement with or written permission from the corporation.

Cloak and Dagger
Master PCB Schematic Diagram

ATARI®

A Warner Communications Company

© ATARI INC. 1983

SP-242 Sheet 3B
1st printing

Motion Object

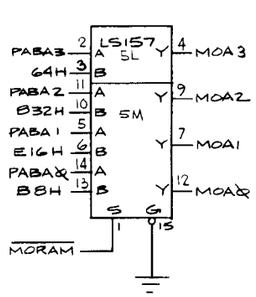

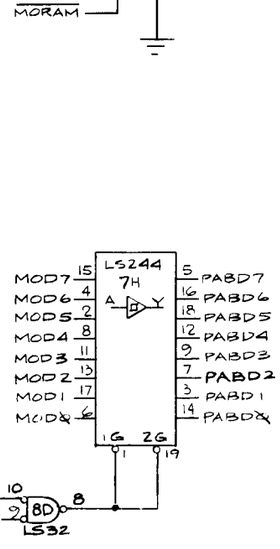

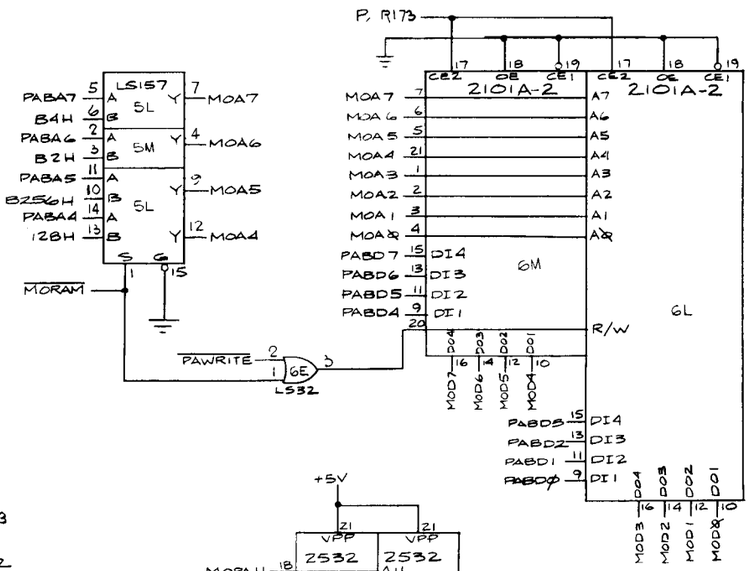

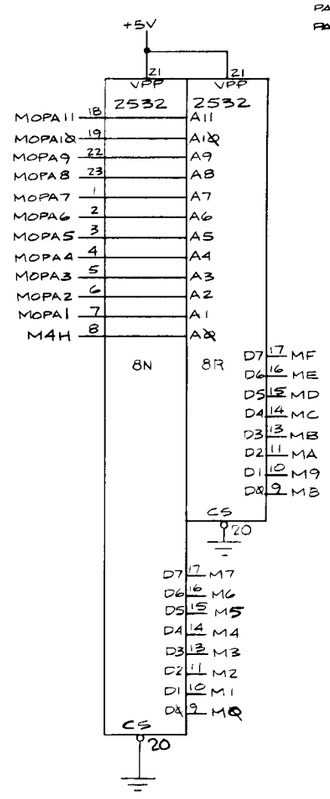

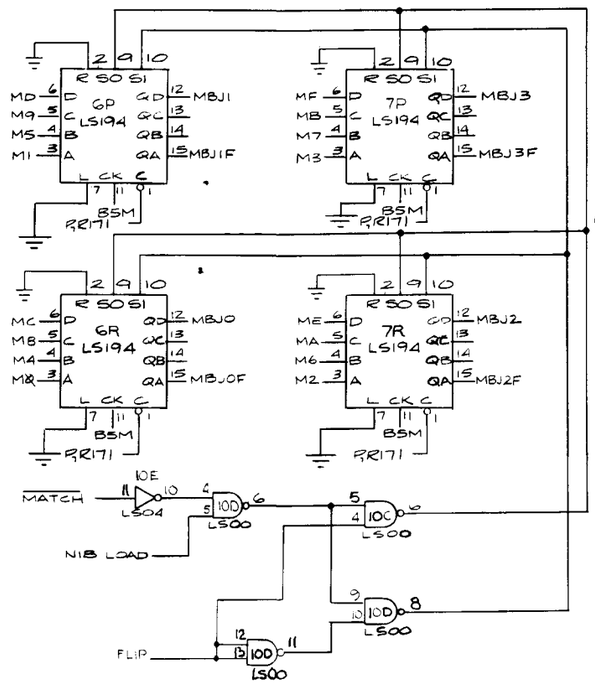

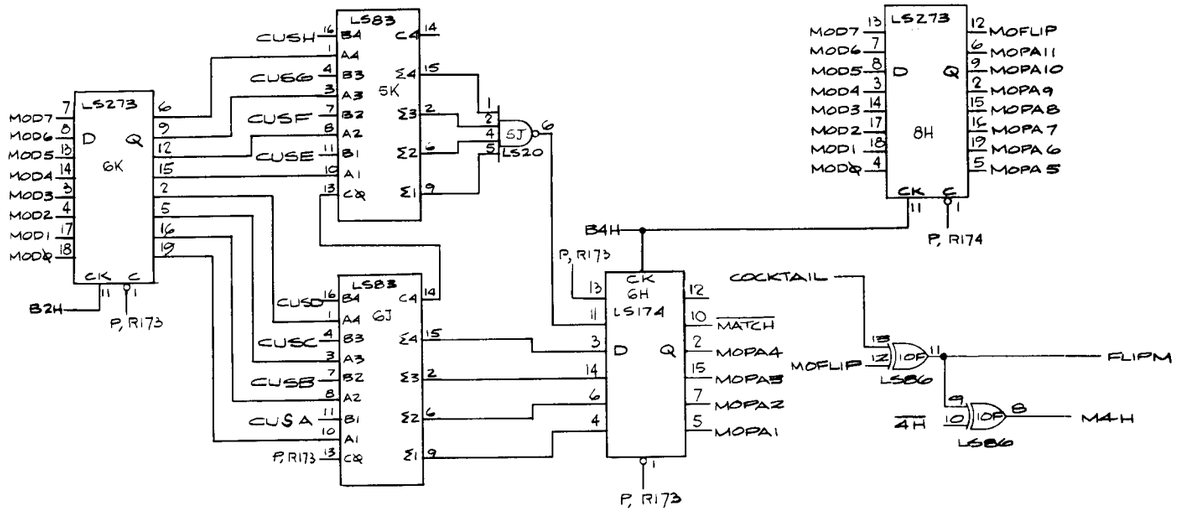

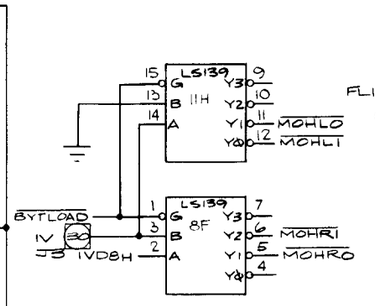

NOTICE TO ALL PERSONS RECEIVING THIS DRAWING

CONFIDENTIAL. Reproduction forbidden without the specific written permission of Atari, Inc., Sunnyvale, CA. This drawing is only conditionally issued, and neither receipt nor possession thereof confers or transfers any right in, or license to use, the subject matter of the drawing or any design or technical information shown thereon, nor any right to reproduce this drawing or any part thereof. Except for manufacture by vendors of Atari, Inc., and for manufacture under the corporation's written license, no right is granted to reproduce this drawing or the subject matter thereof, unless by written agreement with or written permission from the corporation.

Cloak and Dagger
Master PCB Schematic Diagram

ATARI®
A Warner Communications Company

© ATARI INC. 1983

SP-242 Sheet 4A
1st printing

Motion Object Buffers

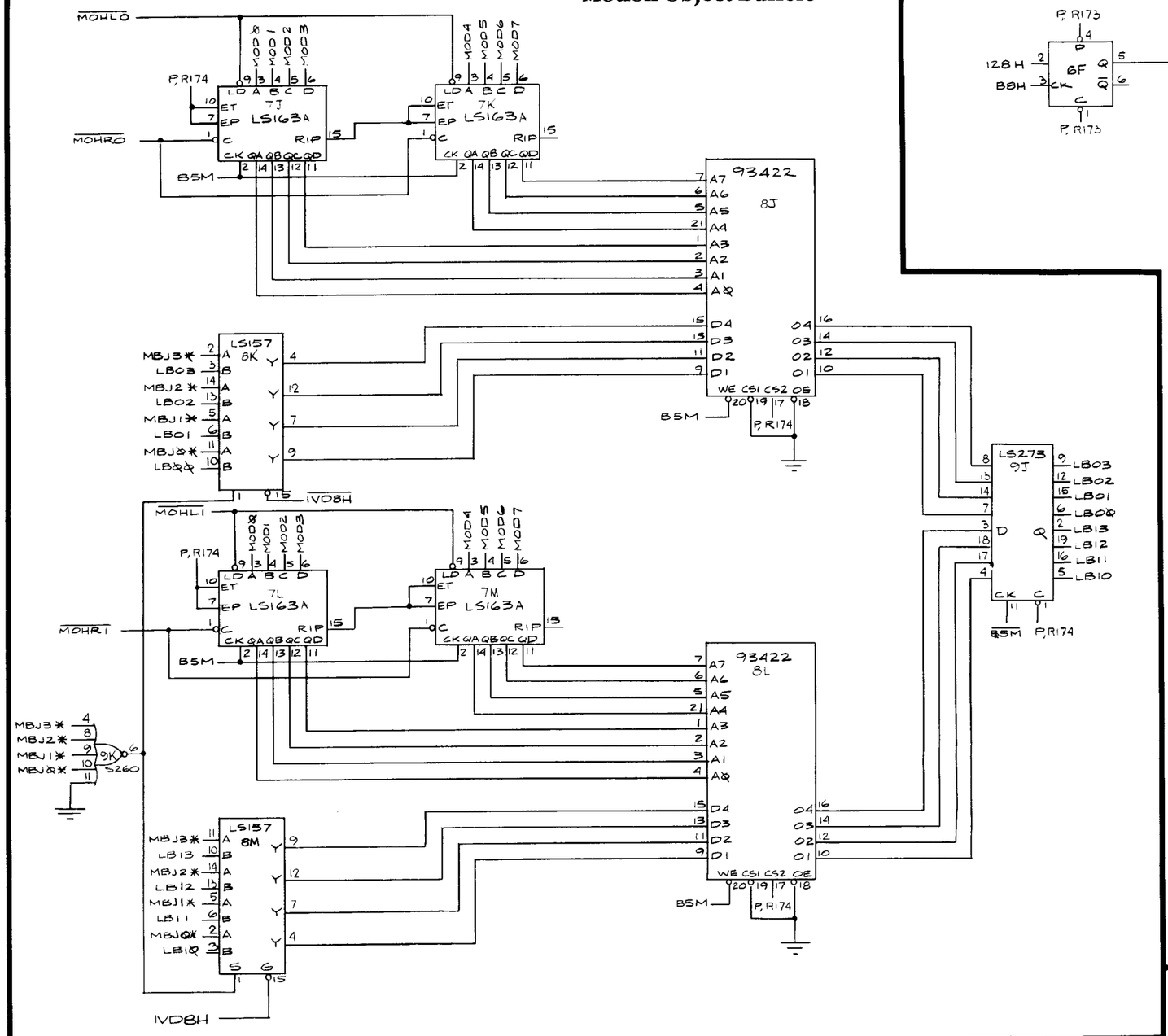

Video

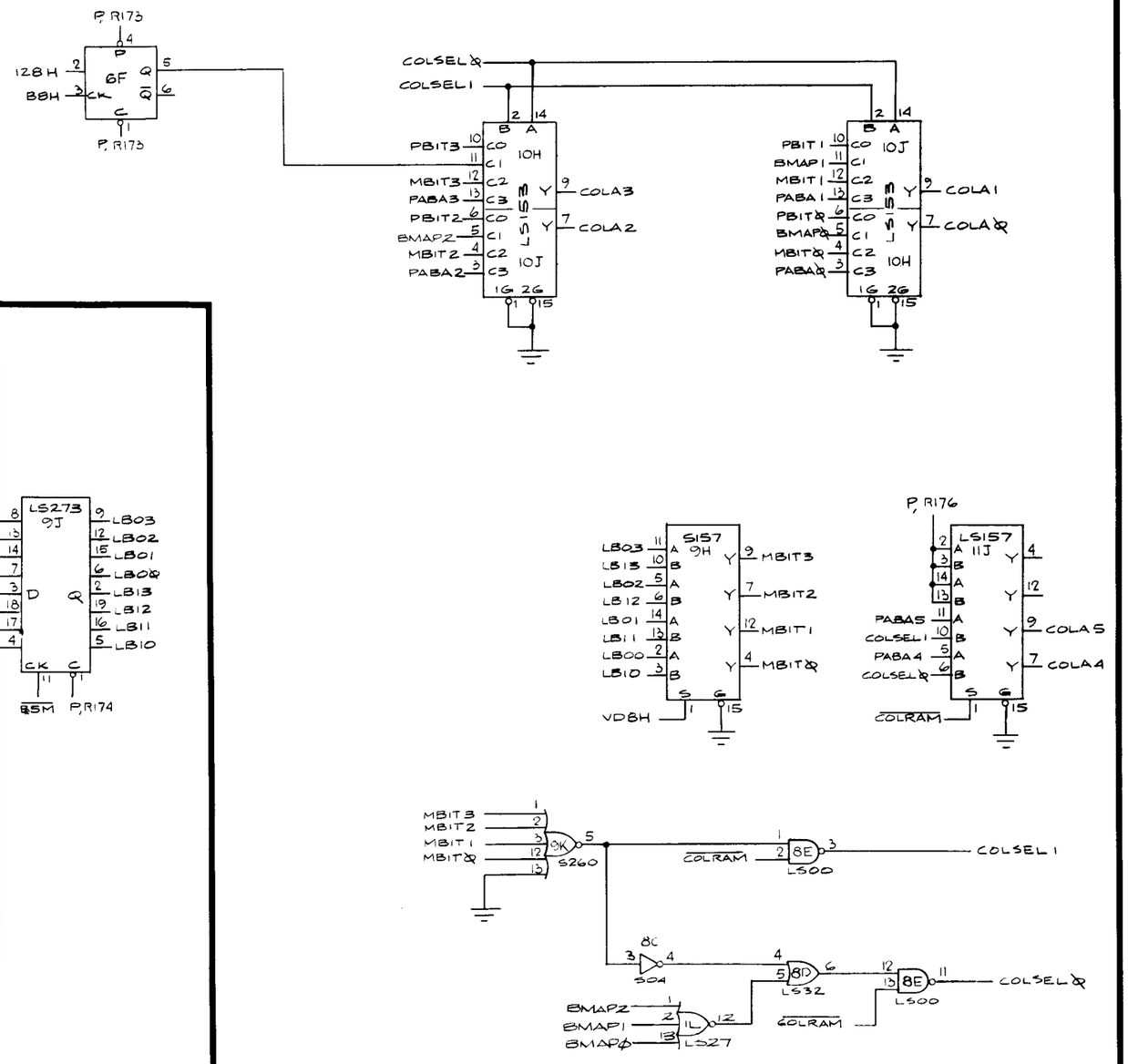

NOTICE TO ALL PERSONS RECEIVING THIS DRAWING

CONFIDENTIAL. Reproduction forbidden without the specific written permission of Atari, Inc., Sunnyvale, CA. This drawing is only conditionally issued, and neither receipt nor possession thereof confers or transfers any right in, or license to use, the subject matter of the drawing or any design or technical information shown thereon, nor any right to reproduce this drawing or any part thereof. Except for manufacture by vendors of Atari, Inc., and for manufacture under the corporation's written license, no right is granted to reproduce this drawing or the subject matter thereof, unless by written agreement with or written permission from the corporation.

Cloak and Dagger
Master PCB Schematic Diagram

ATARI®

A Warner Communications Company

© ATARI INC. 1983

SP-242 Sheet 4B
1st printing

Inputs

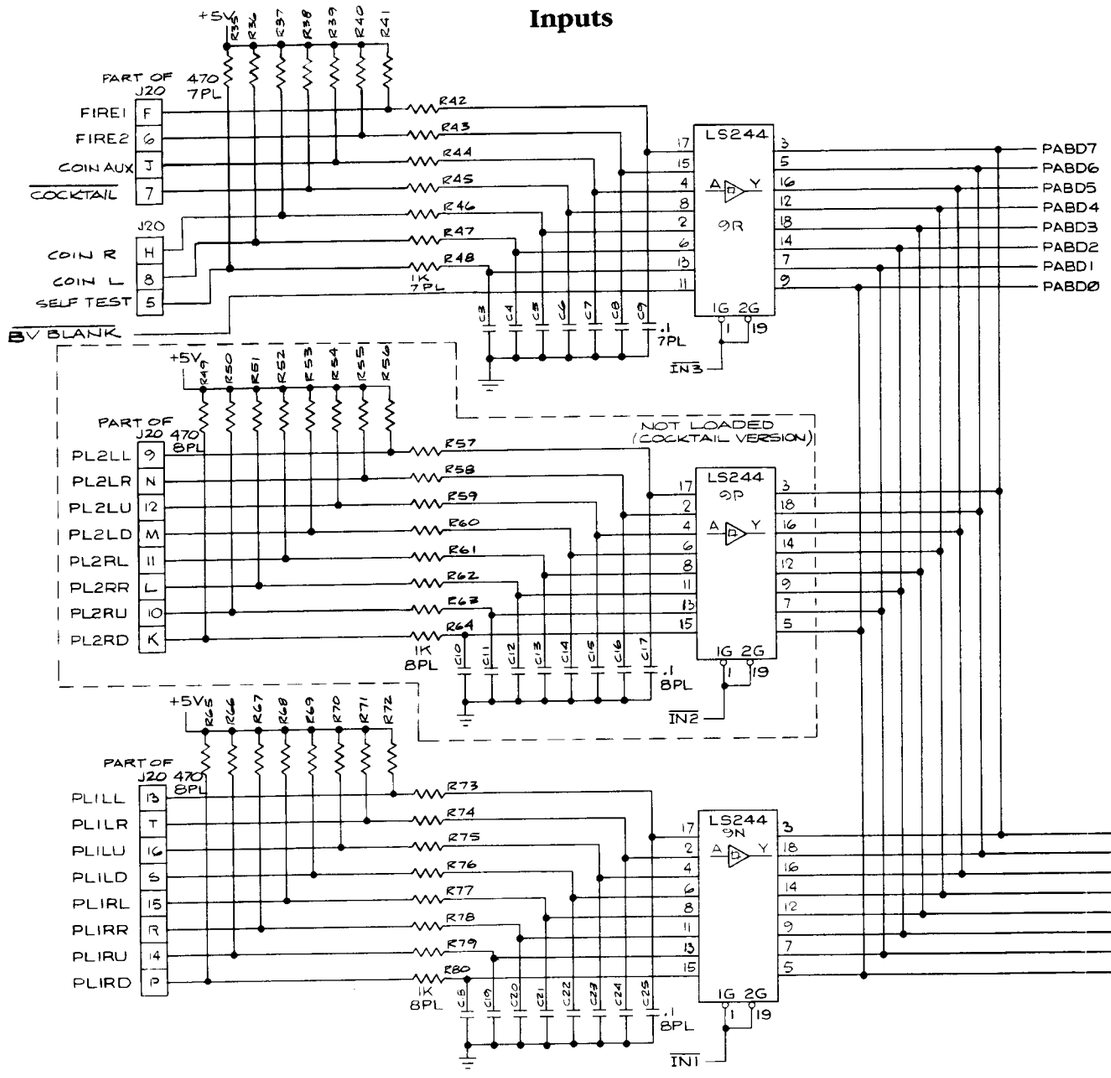

R-G-B Output

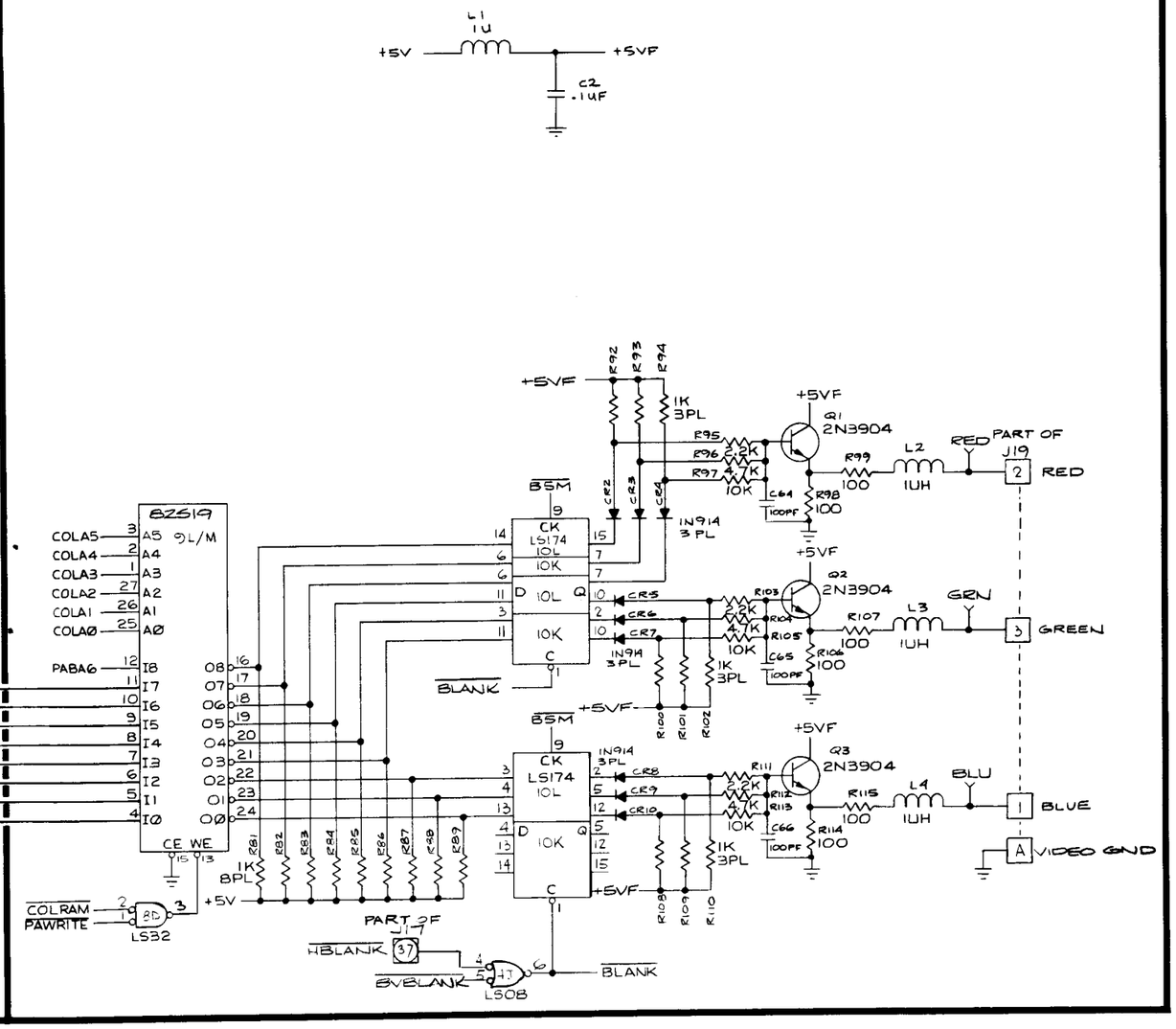

NOTICE TO ALL PERSONS RECEIVING THIS DRAWING

CONFIDENTIAL: Reproduction forbidden without the specific written permission of Atari, Inc., Sunnyvale, CA. This drawing is only conditionally issued, and neither receipt nor possession thereof confers or transfers any right in, or license to use, the subject matter of the drawing or any design or technical information shown thereon, nor any right to reproduce this drawing or any part thereof. Except for manufacture by vendors of Atari, Inc., and for manufacture under the corporation's written license, no right is granted to reproduce this drawing or the subject matter thereof, unless by written agreement with or written permission from the corporation.

Cloak and Dagger
Master PCB Schematic Diagram

ATARI®
A Warner Communications Company

© ATARI INC. 1983

SP-242 Sheet 5A
1st printing

Audio

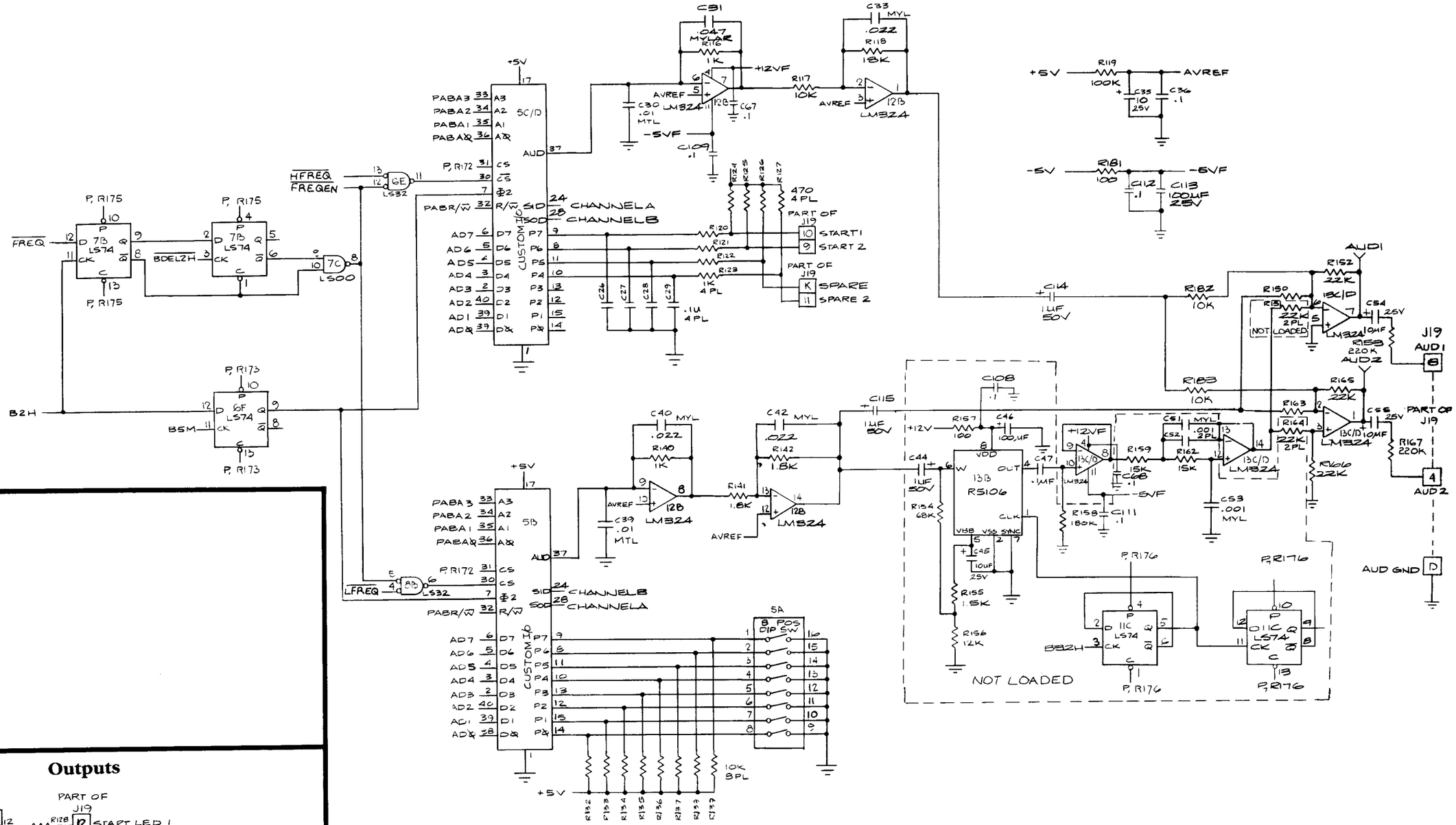

Outputs

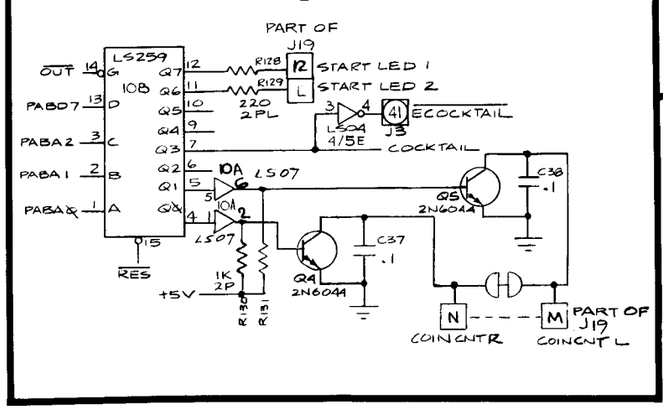

NOTICE TO ALL PERSONS RECEIVING THIS DRAWING

CONFIDENTIAL: Reproduction forbidden without the specific written permission of Atari, Inc., Sunnyvale, CA. This drawing is only conditionally issued, and neither receipt nor possession thereof confers or transfers any right in, or license to use, the subject matter of the drawing or any design or technical information shown thereon, nor any right to reproduce this drawing or any part thereof. Except for manufacture by vendors of Atari, Inc., and for manufacture under the corporation's written license, no right is granted to reproduce this drawing or the subject matter thereof, unless by written agreement with or written permission from the corporation.

Cloak and Dagger

Master PCB Schematic Diagram

ATARI®

A Warner Communications Company

© ATARI INC. 1983

SP-242 Sheet 5B

1st printing

Power Input

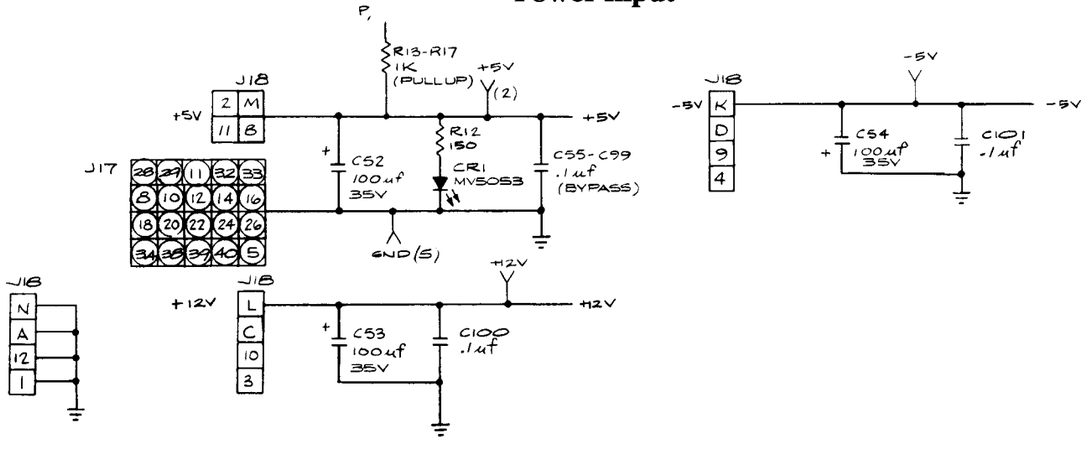

Clock

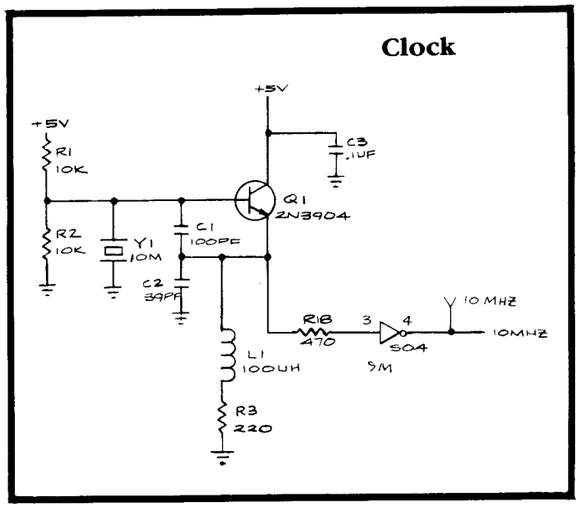

NOTICE TO ALL PERSONS RECEIVING THIS DRAWING

CONFIDENTIAL: Reproduction forbidden without the specific written permission of Atari, Inc., Sunnyvale, CA. This drawing is only conditionally issued, and neither receipt nor possession thereof confers or transfers any right in, or license to use, the subject matter of the drawing or any design or technical information shown thereon, nor any right to reproduce this drawing or any part thereof. Except for manufacture by vendors of Atari, Inc., and for manufacture under the corporation's written license, no right is granted to reproduce this drawing or the subject matter thereof, unless by written agreement with or written permission from the corporation.

Cloak and Dagger
Slave PCB Schematic Diagram

ATARI®

A Warner Communications Company

© ATARI INC. 1983

SP-242 Sheet 6A
1st printing

Slave Microprocessor

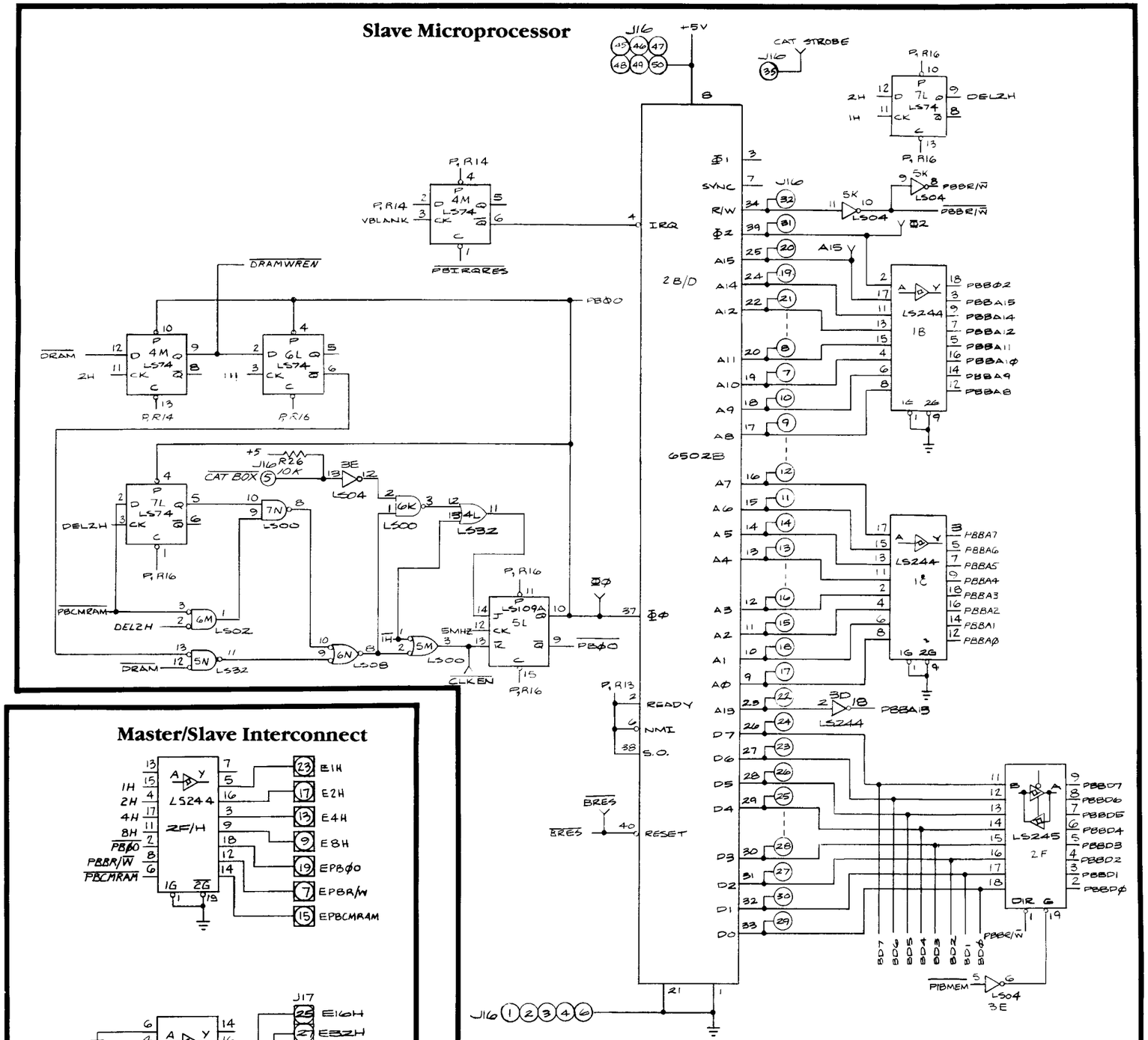

Master/Slave Interconnect

Slave Processing

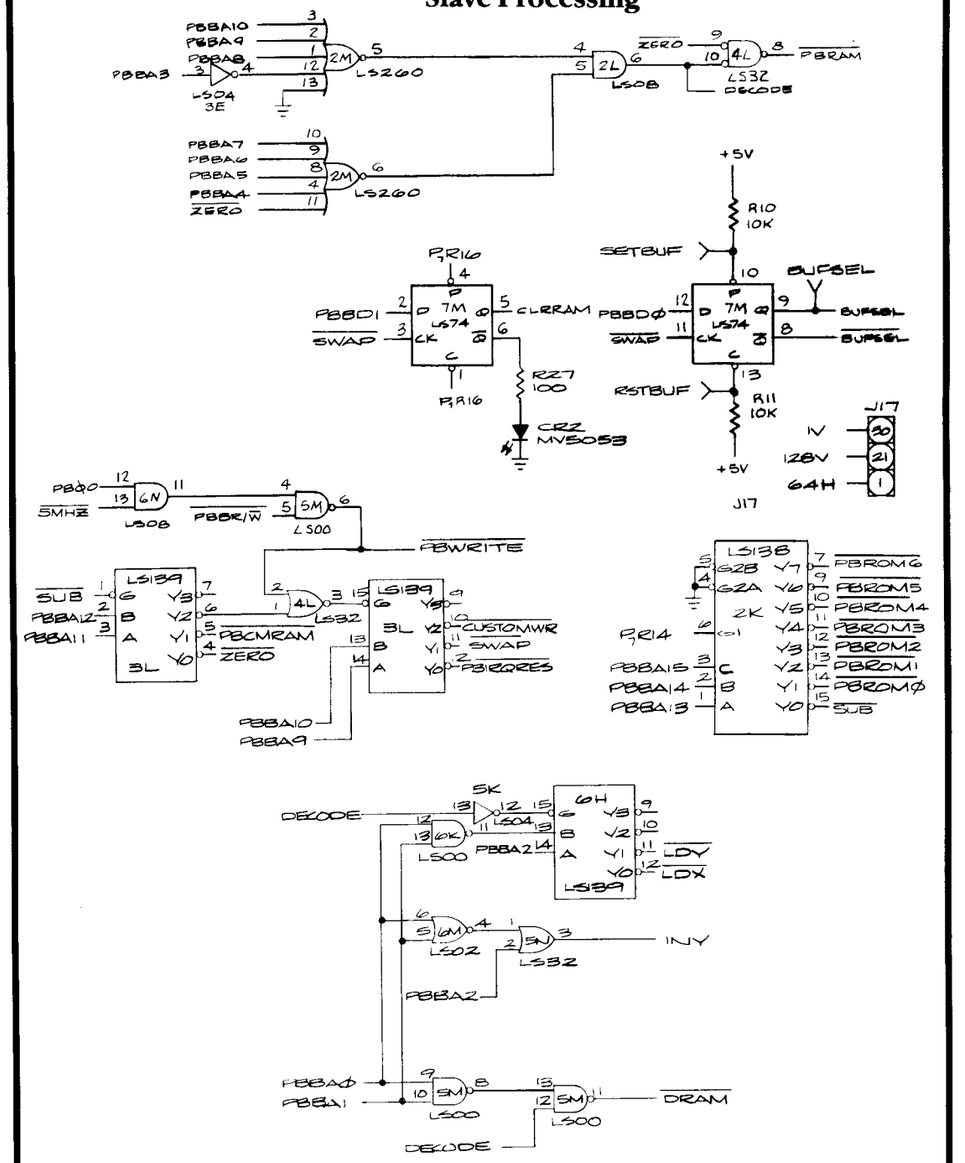

NOTICE TO ALL PERSONS RECEIVING THIS DRAWING

CONFIDENTIAL: Reproduction forbidden without the specific written permission of Atari, Inc., Sunnyvale, CA. This drawing is only conditionally issued, and neither receipt nor possession thereof confers or transfers any right in, or license to use, the subject matter of the drawing or any design or technical information shown thereon, nor any right to reproduce this drawing or any part thereof. Except for manufacture by vendors of Atari, Inc., and for manufacture under the corporation's written license, no right is granted to reproduce this drawing or the subject matter thereof, unless by written agreement with or written permission from the corporation.

Cloak and Dagger
Slave PCB Schematic Diagram

ATARI®
A Warner Communications Company

© ATARI INC. 1983

SP-242 Sheet 6B
1st printing

Sync Chain

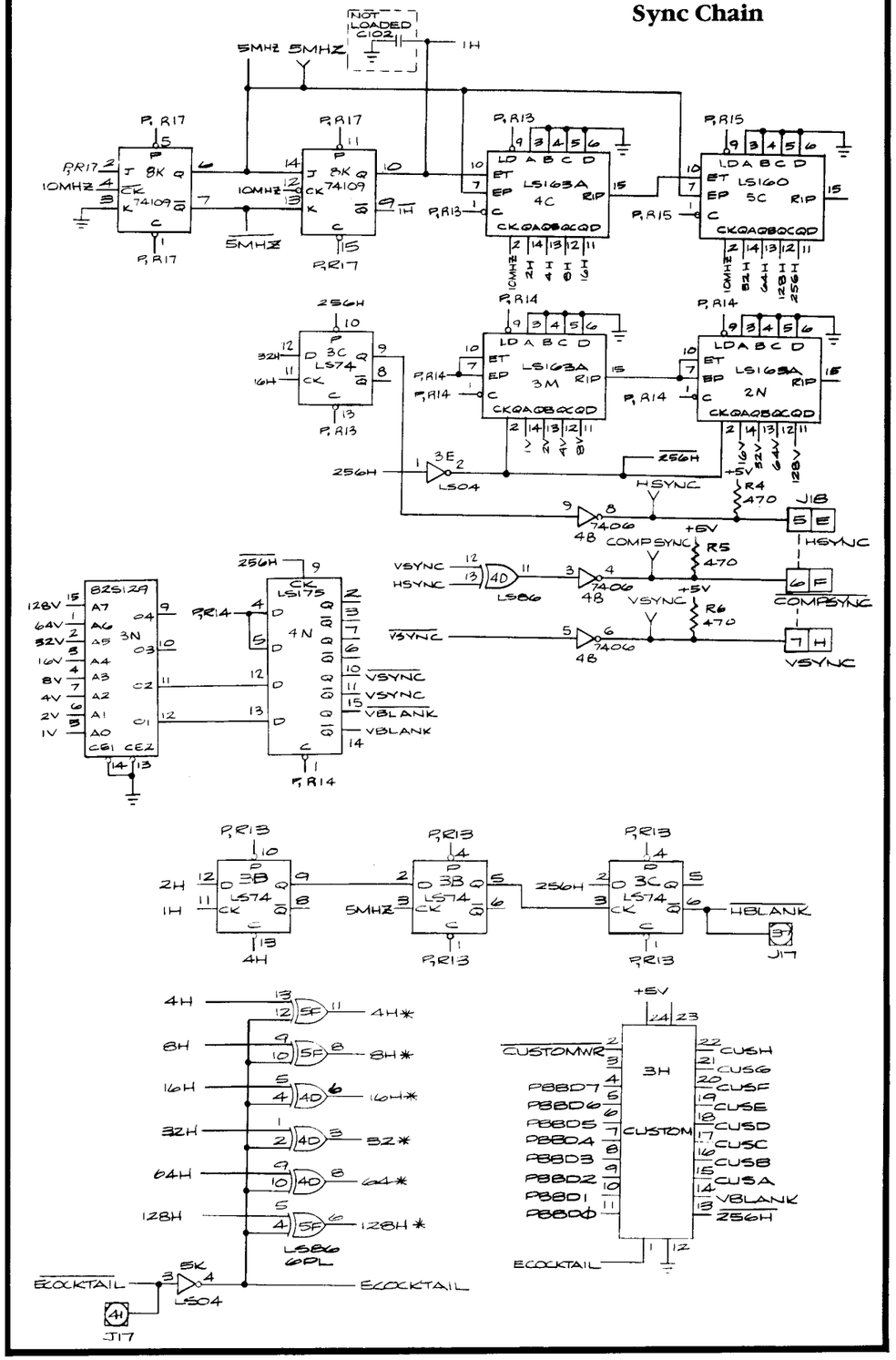

Slave Program ROM

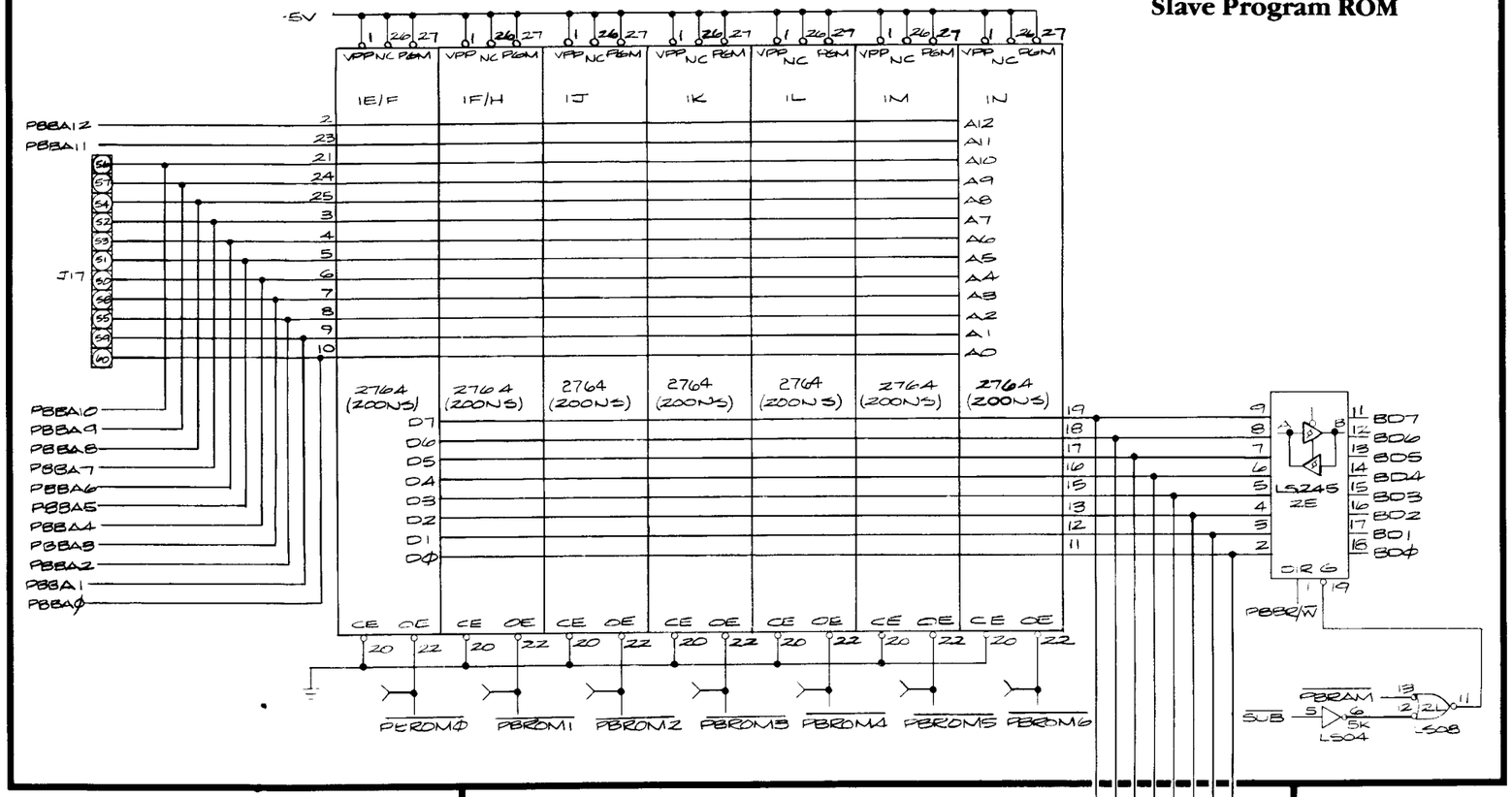

Working RAM

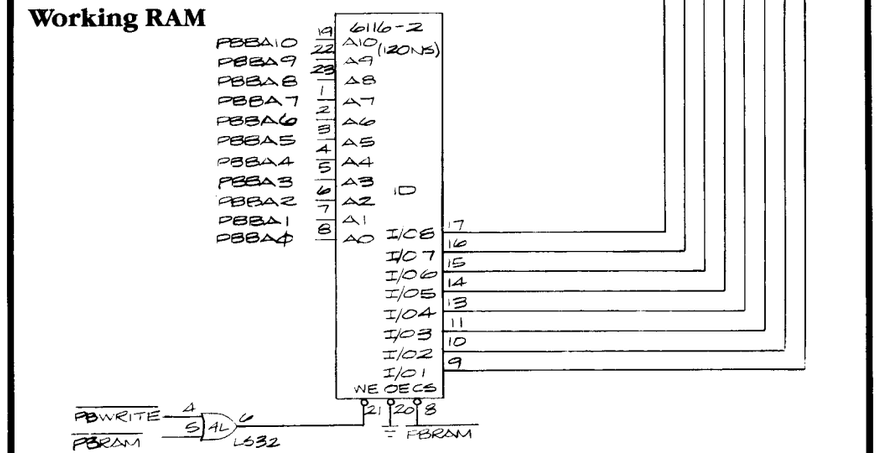

Communication RAM Interconnect

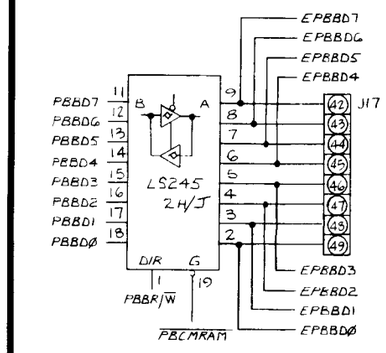

NOTICE TO ALL PERSONS RECEIVING THIS DRAWING

CONFIDENTIAL. Reproduction forbidden without the specific written permission of Atari, Inc., Sunnyvale, CA. This drawing is only conditionally issued, and neither receipt nor possession thereof confers or transfers any right in, or license to use, the subject matter of the drawing or any design or technical information shown thereon, nor any right to reproduce this drawing or any part thereof. Except for manufacture by vendors of Atari, Inc., and for manufacture under the corporation's written license, no right is granted to reproduce this drawing or the subject matter thereof, unless by written agreement with or written permission from the corporation.

Cloak and Dagger
Slave PCB Schematic Diagram

ATARI®
A Warner Communications Company

© ATARI INC. 1983

SP-242 Sheet 7A
1st printing

Bit Map Clock

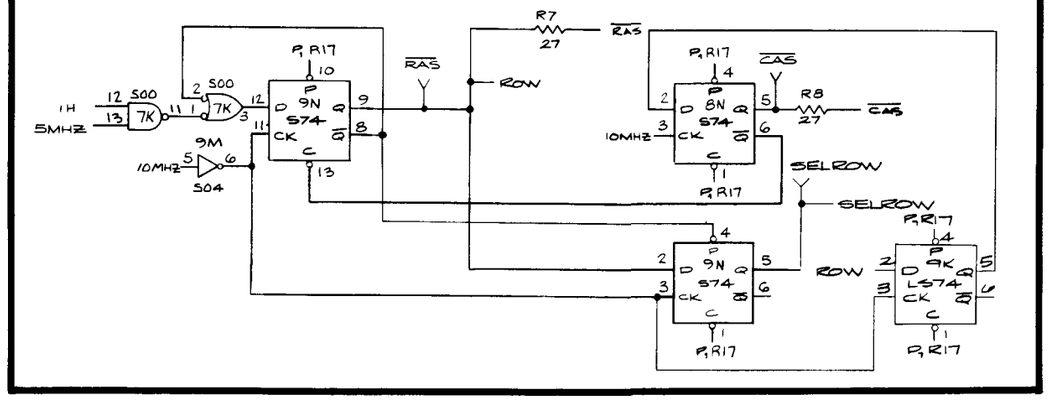

Bit Map Write

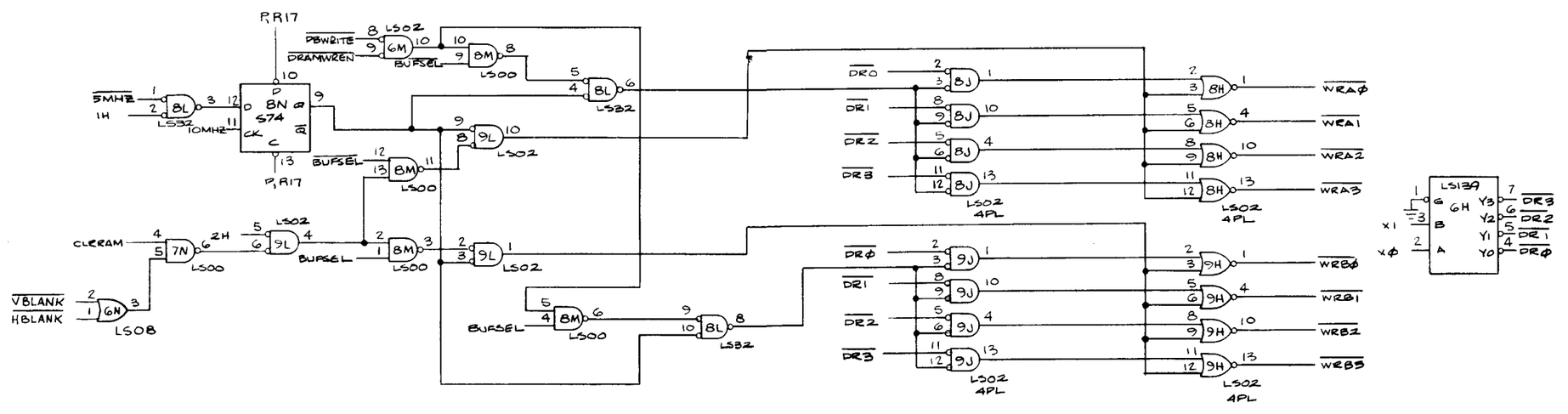

NOTICE TO ALL PERSONS RECEIVING THIS DRAWING

CONFIDENTIAL: Reproduction forbidden without the specific written permission of Atari, Inc., Sunnyvale, CA. This drawing is only conditionally issued, and neither receipt nor possession thereof confers or transfers any right in, or license to use, the subject matter of the drawing or any design or technical information shown thereon, nor any right to reproduce this drawing or any part thereof. Except for manufacture by vendors of Atari, Inc., and for manufacture under the corporation's written license, no right is granted to reproduce this drawing or the subject matter thereof, unless by written agreement with or written permission from the corporation.

Cloak and Dagger
Slave PCB Schematic Diagram

ATARI®
A Warner Communications Company

© ATARI INC. 1983

SP-242 Sheet 7B
1st printing

Bit Map

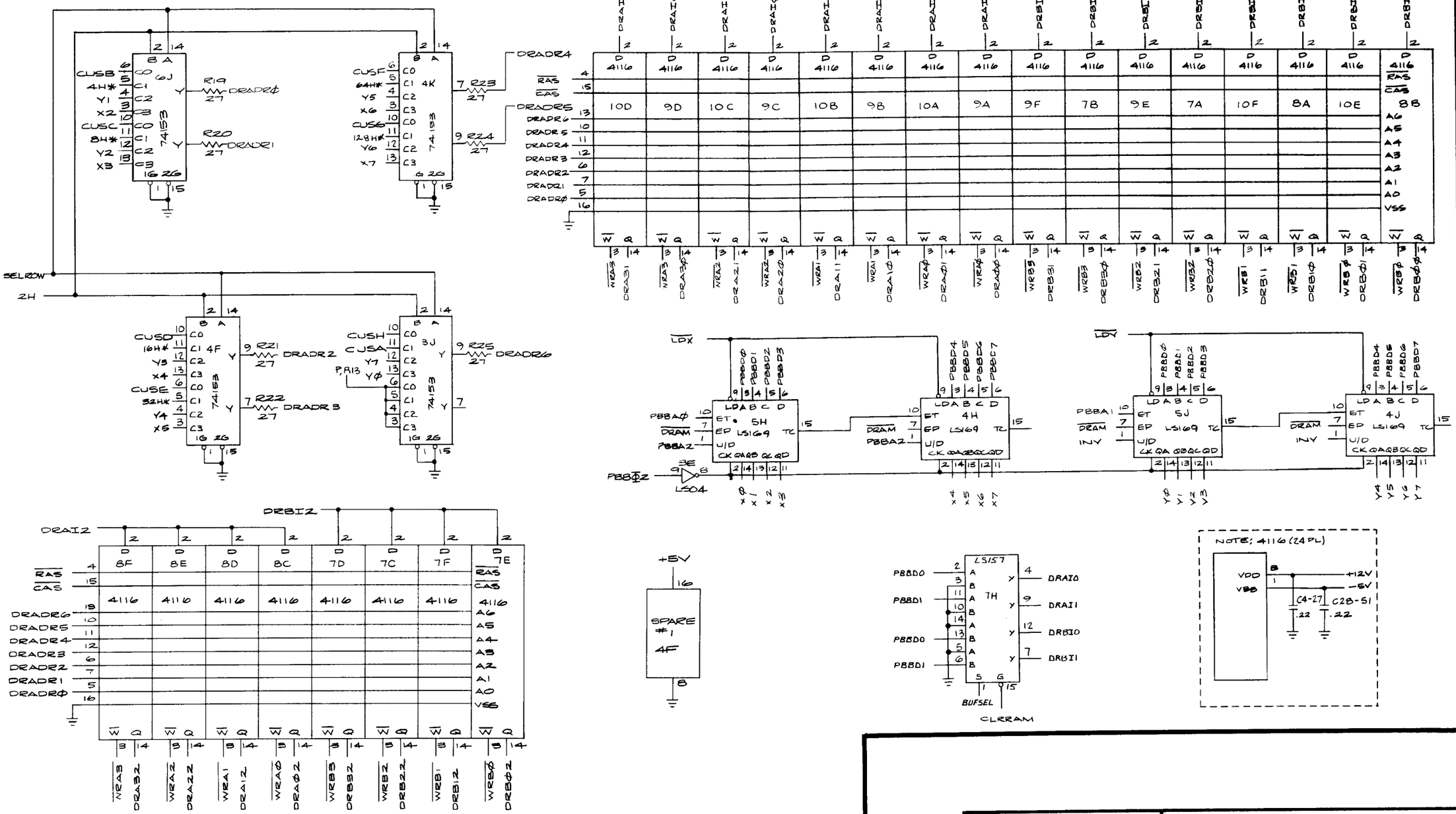

NOTICE TO ALL PERSONS RECEIVING THIS DRAWING

CONFIDENTIAL: Reproduction forbidden without the specific written permission of Atari, Inc., Sunnyvale, CA. This drawing is only conditionally issued, and neither receipt nor possession thereof confers or transfers any right in, or license to use, the subject matter of the drawing or any design or technical information shown thereon, nor any right to reproduce this drawing or any part thereof. Except for manufacture by vendors of Atari, Inc., and for manufacture under the corporation's written license, no right is granted to reproduce this drawing or the subject matter thereof, unless by written agreement with or written permission from the corporation.

Cloak and Dagger
Slave PCB Schematic Diagram

ATARI®

A Warner Communications Company

© ATARI INC. 1983

SP-242 Sheet 8A
1st printing

Bit Map Output

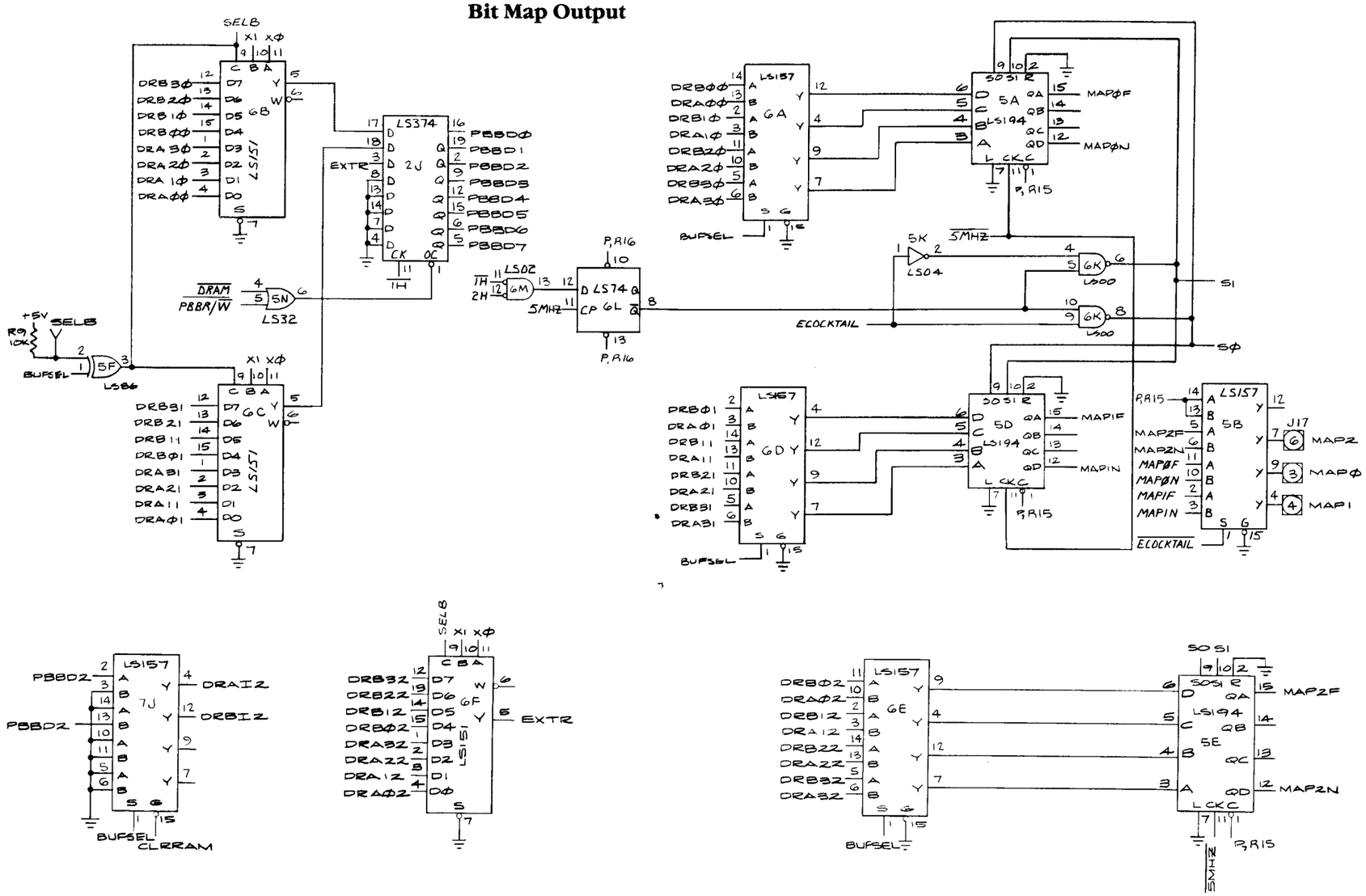

NOTICE TO ALL PERSONS RECEIVING THIS DRAWING

CONFIDENTIAL: Reproduction forbidden without the specific written permission of Atari, Inc., Sunnyvale, CA. This drawing is only conditionally issued, and neither receipt nor possession thereof confers or transfers any right in, or license to use, the subject matter of the drawing or any design or technical information shown thereon, nor any right to reproduce this drawing or any part thereof. Except for manufacture by vendors of Atari, Inc., and for manufacture under the corporation's written license, no right is granted to reproduce this drawing or the subject matter thereof, unless by written agreement with or written permission from the corporation.

Cloak and Dagger
Slave PCB Schematic Diagram

ATARI®
A Warner Communications Company

© ATARI INC. 1983

SP-242 Sheet 8B
1st printing

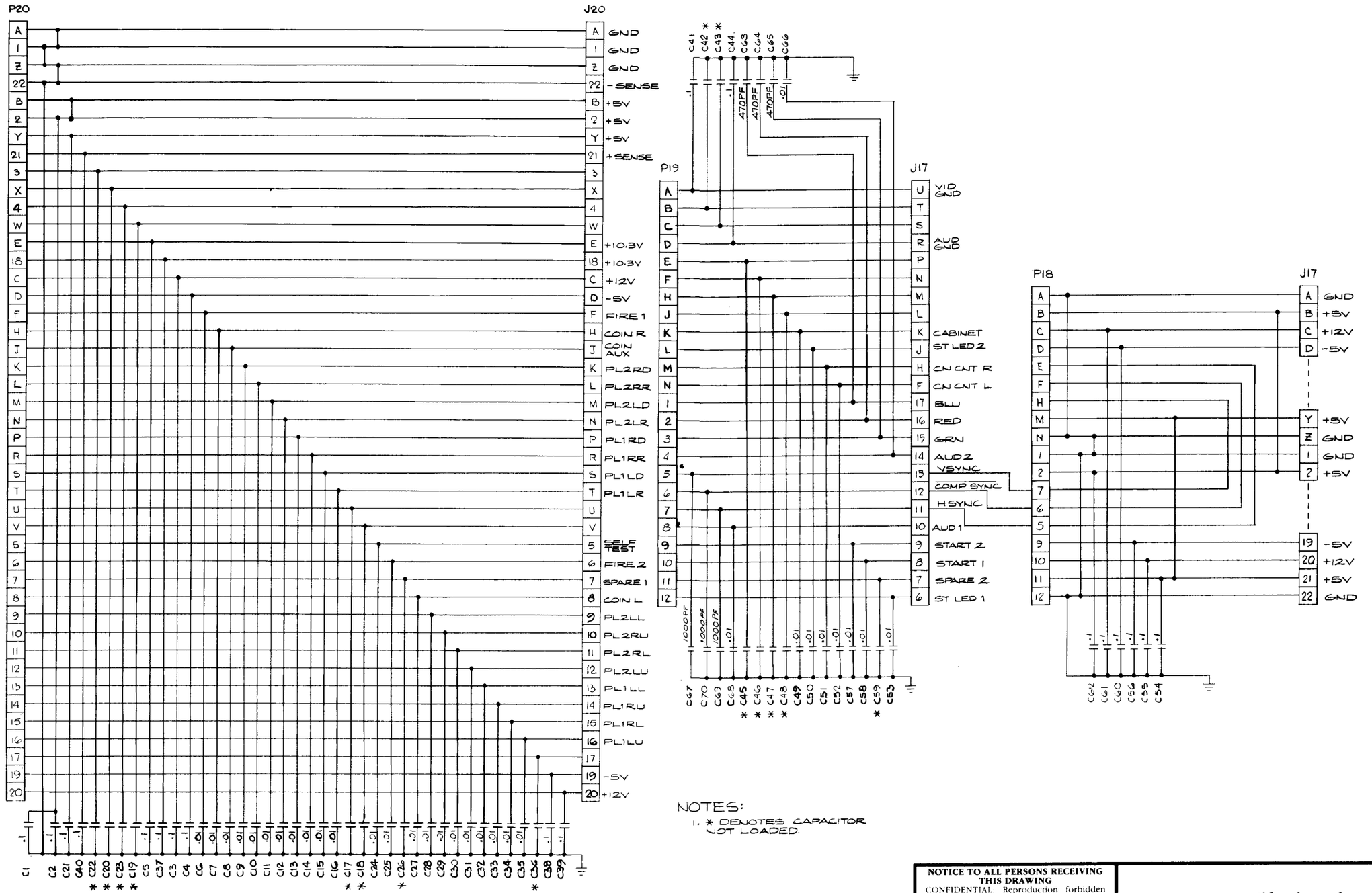

NOTES:

1. * DENOTES CAPACITOR NOT LOADED.

NOTICE TO ALL PERSONS RECEIVING THIS DRAWING

CONFIDENTIAL: Reproduction forbidden without the specific written permission of Atari, Inc., Sunnyvale, CA. This drawing is only conditionally issued, and neither receipt nor possession thereof confers or transfers any right in, or license to use, the subject matter of the drawing or any design or technical information shown thereon, nor any right to reproduce this drawing or any part thereof. Except for manufacture by vendors of Atari, Inc., and for manufacture under the corporation's written license, no right is granted to reproduce this drawing or the subject matter thereof, unless by written agreement with or written permission from the corporation.

Cloak and Dagger
EMI Shield PCB

ATARI®

A Warner Communications Company

© ATARI INC. 1983

SP-242 Sheet 9A
1st printing

Master PCB

HEXA-DECIMAL ADDRESS	ADDRESS BUS SIGNAL LINES A15	A14	A13	A12	A11	A10	A9	A8	A7	A6	A5	A4	A3	A2	A1	A0	READ/ WRITE	DATA BUS SIGNAL LINES D7	D6	D5	D4	D3	D2	D1	D0	FUNCTION
0000–03FF	0	0	0	0	0	0	A	A	A	A	A	A	A	A	A	A	R/W	D	D	D	D	D	D	D	D	Working RAM
0400–07FF	0	0	0	0	0	1	A	A	A	A	A	A	A	A	A	A	R/W	D	D	D	D	D	D	D	D	Playfield RAM
0800–0FFF	0	0	0	0	1	A	A	A	A	A	A	A	A	A	A	A	R/W	D	D	D	D	D	D	D	D	Communication RAM
1000–100F	0	0	0	1	0								A	A	A	A	R	D	D	D	D	D	D	D	D	Custom I/O 1
1008	0	0	0	1	0								1	0	0	0	R		D							Start 2 Players
1008	0	0	0	1	0								1	0	0	0	R	D								Start 1 Player
1800–180F	0	0	0	1	1								A	A	A	A	R/W	D	D	D	D	D	D	D	D	Custom I/O 2
2000	0	0	1	0	0	0	0										R	D	D	D	D	D	D	D	D	Player 1 Joysticks
2200	0	0	1	0	0	0	1										R	D	D	D	D	D	D	D	D	Player 2 Joysticks
2400	0	0	1	0	0	1	0										R								D	Vertical Blank
																	R							D		Self-Test
																	R						D			Left Coin
																	R					D				Right Coin
																	R				D					Cocktail Input
																	R			D						Auxiliary Coin
																	R		D							Player 2 Igniter
																	R	D								Player 1 Igniter
2600	0	0	1	0	0	1	1										W	D	D	D	D	D	D	D	D	Custom Write
2800–29FF	0	0	1	0	1			A	A	A	A	A	A	A	A	A	R/W	D	D	D	D	D	D	D	D	Non-Volatile RAM
3000–30FF	0	0	1	1	0	0	0		A	A	A	A	A	A	A	A	R/W	D	D	D	D	D	D	D	D	Motion RAM
3200–327F	0	0	1	1	0	0	1			D*	A	A	A	A	A	A	W	D	D	D	D	D	D	D	D	Color RAM
3800	0	0	1	1	1	0	0							0	0	0	W	D								Right coin Counter
3801	0	0	1	1	1	0	0							0	0	1	W	D								Left Coin Counter
3803	0	0	1	1	1	0	0							0	1	1	W	D								Cocktail Output
3806	0	0	1	1	1	0	0							1	1	0	W	D								Start 2 LED
3807	0	0	1	1	1	0	0							1	1	1	W	D								Start 1 LED
3A00	0	0	1	1	1	0	1										W									Watchdog
3C00	0	0	1	1	1	1	0										W									Reset IRQ
3E00	0	0	1	1	1	1	1										W								D	Enable Non-Volatile RAM
4000–FFFF	0	1	A	A	A	A	A	A	A	A	A	A	A	A	A	A	R	D	D	D	D	D	D	D	D	Program RAM
	1	0	A	A	A	A	A	A	A	A	A	A	A	A	A	A	R	D	D	D	D	D	D	D	D	Program RAM
	1	1	A	A	A	A	A	A	A	A	A	A	A	A	A	A	R	D	D	D	D	D	D	D	D	Program RAM

*9th data bit for the Color RAM.

NOTICE TO ALL PERSONS RECEIVING THIS DRAWING
CONFIDENTIAL: Reproduction forbidden without the specific written permission of Atari, Inc., Sunnyvale, CA. This drawing is only conditionally issued, and neither receipt nor possession thereof confers or transfers any right in, or license to use, the subject matter of the drawing or any design or technical information shown thereon, nor any right to reproduce this drawing or any part thereof. Except for manufacture by vendors of Atari, Inc., and for manufacture under the corporation's written license, no right is granted to reproduce this drawing or the subject matter thereof, unless by written agreement with or written permission from the corporation.

Cloak and Dagger
Memory Map-Master PCB

ATARI®
A Warner Communications Company

© ATARI INC. 1983

SP-242 Sheet 9B
1st printing

Slave PCB

HEXA-DECIMAL ADDRESS	ADDRESS BUS SIGNAL LINES A15	A14	A13	A12	A11	A10	A9	A8	A7	A6	A5	A4	A3	A2	A1	A0	READ/ WRITE	DATA BUS SIGNAL LINES D7	D6	D5	D4	D3	D2	D1	D0	FUNCTION
000–0007	0	0	0	0	0	0	0	0	0	0	0	0	0	A	A	A	R/W	D	D	D	D	D	D	D	D	Working RAM
0008–000A, 000C–000E	0	0	0	0	0	0	0	0	0	0	0	0	1	A	0	0	R/W						D	D	D	Store To/Read From Bit Map
	0	0	0	0	0	0	0	0	0	0	0	0	1	A	0	1	R/W									
	0	0	0	0	0	0	0	0	0	0	0	0	1	A	1	0	R/W									
000B	0	0	0	0	0	0	0	0	0	0	0	0	1	0	1	1	W	D	D	D	D	D	D	D	D	Bit Map X Coordinate
000F	0	0	0	0	0	0	0	0	0	0	0	0	1	1	1	1	W	D	D	D	D	D	D	D	D	Bit Map Y Coordinate
0008	0	0	0	0	0	0	0	0	0	0	0	0	1	0	0	0	R/W									Decrmt. X,/Incrmt. Y
0009	0	0	0	0	0	0	0	0	0	0	0	0	1	0	0	1	R/W									Decrmt. Y
000A	0	0	0	0	0	0	0	0	0	0	0	0	1	0	1	0	R/W									Decrmt. X
000C	0	0	0	0	0	0	0	0	0	0	0	0	1	1	0	0	R/W									Incrmt. X, Incrmt Y
000D	0	0	0	0	0	0	0	0	0	0	0	0	1	1	0	1	R/W									Incrmt. Y
000E	0	0	0	0	0	0	0	0	0	0	0	0	1	1	1	0	R/W									Incrmt. X
0010–07FF	0	0	0	0	0	A	A	A	A	A	A	A	A	A	A	A	R/W	D	D	D	D	D	D	D	D	Working RAM
0800–0FFF	0	0	0	0	1	A	A	A	A	A	A	A	A	A	A	A	R/W	D	D	D	D	D	D	D	D	Communication RAM
1000	0	0	0	1	0	0	0										W									Reset IRQ
1200	0	0	0	1	0	0	1										W								D	Swap Bit Maps
1200	0	0	0	1	0	0	1										W							D		Clear Bit Map
1400	0	0	0	1	0	1	0										W	D	D	D	D	D	D	D	D	Custom Write
2000–FFFF	A*	A*	A*	A	A	A	A	A	A	A	A	A	A	A	A	A	R	D	D	D	D	D	D	D	D	Program Memory

*Not equal to 000.

NOTICE TO ALL PERSONS RECEIVING THIS DRAWING

CONFIDENTIAL: Reproduction forbidden without the specific written permission of Atari, Inc., Sunnyvale, CA. This drawing is only conditionally issued, and neither receipt nor possession thereof confers or transfers any right in, or license to use, the subject matter of the drawing or any design or technical information shown thereon, nor any right to reproduce this drawing or any part thereof. Except for manufacture by vendors of Atari, Inc., and for manufacture under the corporation's written license, no right is granted to reproduce this drawing or the subject matter thereof, unless by written agreement with or written permission from the corporation.

Cloak and Dagger
Memory Map-Slave PCB

ATARI®
A Warner Communications Company

© ATARI INC. 1983

SP-242 Sheet 10A
1st printing

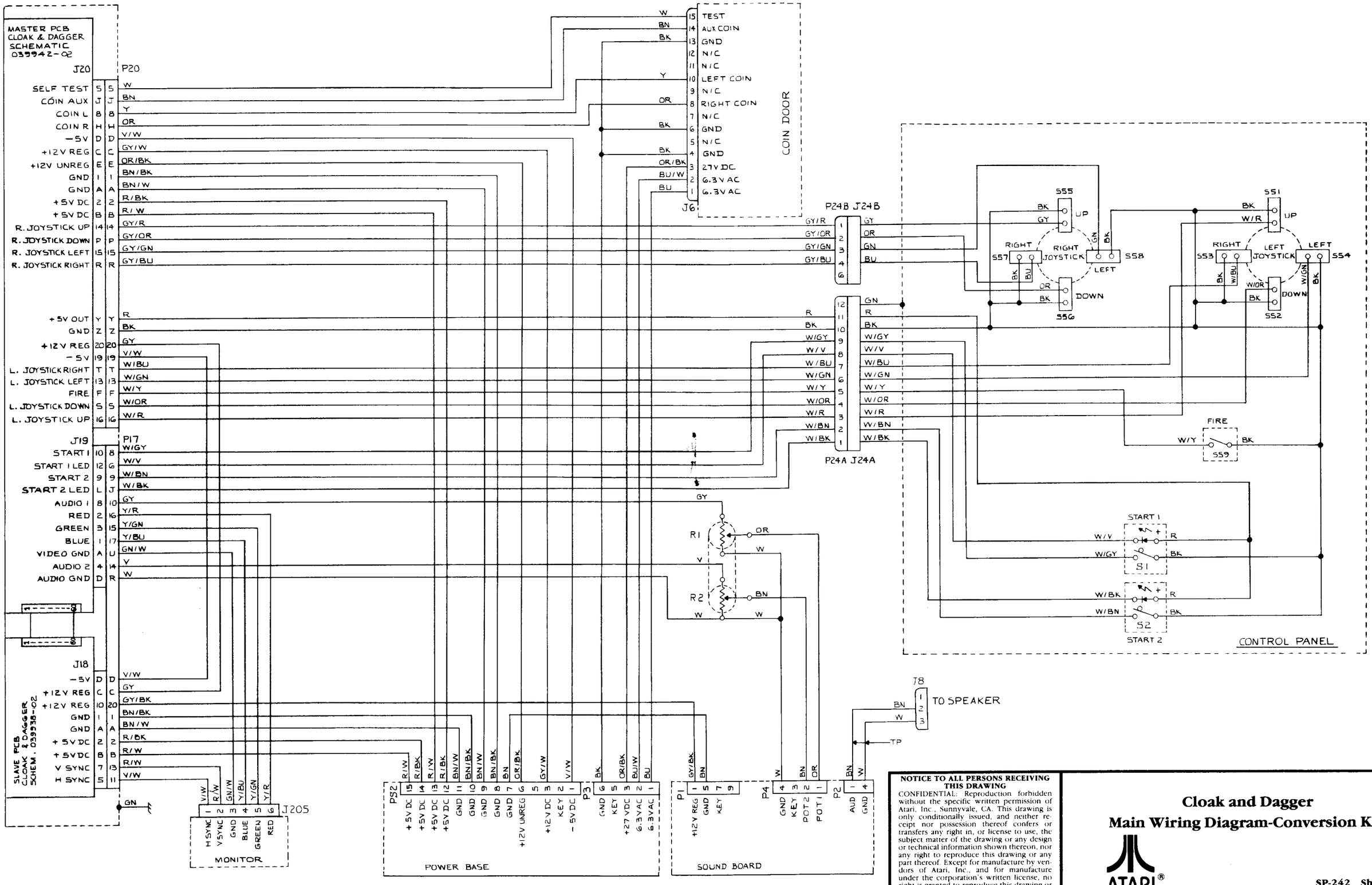

NOTICE TO ALL PERSONS RECEIVING THIS DRAWING

CONFIDENTIAL: Reproduction forbidden without the specific written permission of Atari, Inc., Sunnyvale, CA. This drawing is only conditionally issued, and neither receipt nor possession thereof confers or transfers any right in, or license to use, the subject matter of the drawing or any design or technical information shown thereon, nor any right to reproduce this drawing or any part thereof. Except for manufacture by vendors of Atari, Inc., and for manufacture under the corporation's written license, no right is granted to reproduce this drawing or the subject matter thereof, unless by written agreement with or written permission from the corporation.

Cloak and Dagger
Main Wiring Diagram-Conversion Kit

ATARI®

A Warner Communications Company

© ATARI INC. 1983

SP-242 Sheet 10B
1st printing