

INSTRUCTIONS

SPACE:

Long range scanner shows next enemy type.
Use roller control to move spacecraft left and right.
Fire button shoots laser bolts.
Collision with any space object is deadly.

—OBJECT: DESTROY MOTHERSHIP DEFENSES—

DOCK:

Land on WHITE PLATFORM of defeated Mothership.

MAZE:

Roller control moves spaceman left and right.
Press jump button to make spaceman jump up.
For HIGHER JUMPS, HOLD DOWN button.
Spaceman may FALL WITHOUT HARM.
Shield destroys one maze robot or fireball or laser cannon shot.

—OBJECT: LOCATE AND TOUCH REACTOR. ESCAPE!—

TM-252
1st printing

The Adventures of MAJOR HAVOC™

Operator's Manual with Illustrated Parts Lists



If reading through this manual does not lead to solving a certain maintenance problem, call TELEHELP® at the Atari Customer Service office in your geographical area, as shown below.

WEST and CENTRAL U.S.A.

Parts and Service

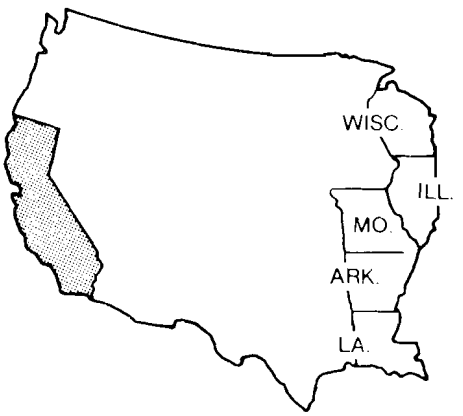

Atari, Inc.
California Customer Service Office
1105 N. Fair Oaks Avenue
P. O. Box 427, Sunnyvale, CA 94086
Telex 17-1103
(Monday–Friday, 7:30–4:00 pm Pacific Time)

☎ From California, Alaska, or Hawaii
(408) 745-2900

☎ Service from anywhere in the area shown in white
toll-free **(800) 538-1611**

EAST U.S.A.

Service only



Atari, Inc.
New Jersey Customer Service Office
12A World's Fair Drive, Somerset, NJ 08873
Telex 37-9347
(Monday–Friday, 7:30–4:00 pm Eastern time)

☎ From New Jersey
(201) 469-5993

☎ From anywhere else in this area
toll-free **(800) 526-3849**

EUROPE

Parts and Service

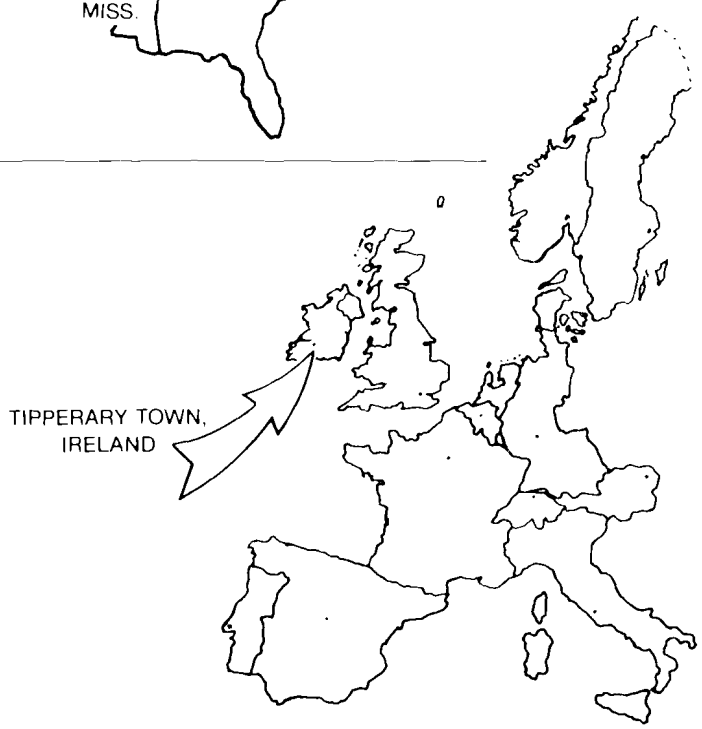

Atari Ireland Limited
European Customer Service Office
Tipperary Town, Ireland
Telex 28165
(Monday–Friday, 9:00–6:00 pm GMT)

☎ 062-52155

The Adventures of

MAJOR HAVOC

Operators Manual

With Illustrated Parts Lists

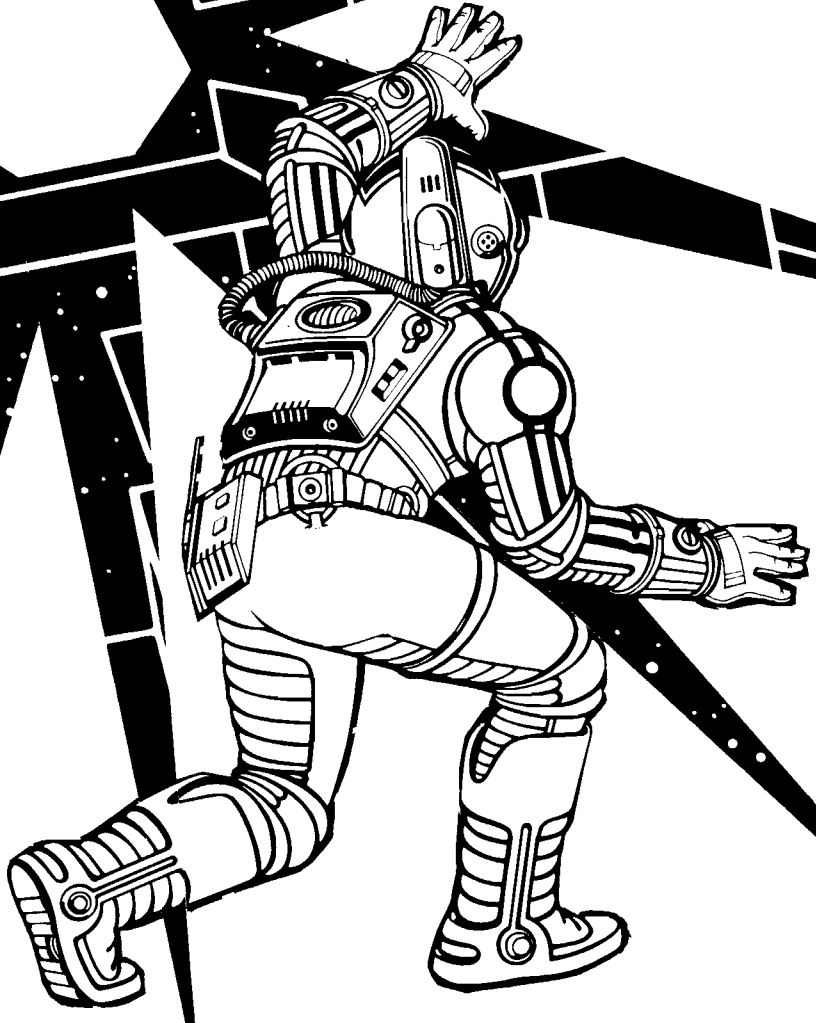

© 1983 by Atari, Inc. **All rights reserved.**

No part of this publication may be reproduced by any mechanical, photographic, or electronic process, or in the form of a phonographic recording, nor may it be stored in a retrieval system, transmitted, or otherwise copied for public or private use, without permission from the publisher.

The game play, all graphic designs, this technical manual, its accompanying schematic diagrams, and the display manual are protected by the U.S. Copyright Act of 1976.

This Act provides for increased penalties for violating federal copyright laws. Courts *can impound* infringing articles while legal action is pending. If infringers are convicted, courts can *order destruction* of the infringing articles.

In addition, the Act provides for payment of statutory damages of up to $250,000 in certain cases. Infringers may also have to pay costs and attorneys' fees and face an imprisonment of up to five years.

Atari will aggressively enforce its copyrights against any infringers. *We will use all legal means* to immediately halt any manufacture, distribution, or operation of a copy of video games made by us. Anyone who purchases such copies risks forfeiting such a game.

Published by: ATARI, INC.
790 Sycamore Drive
P.O. Box 906
Milpitas, California 95035

Printed in the U.S.A. **11M**

Notice Regarding Non-ATARI Parts

WARNING

Use of non-ATARI parts or modifications of any ATARI® game circuitry may adversely affect the safety of your game, and may cause injury to you and your players.

You may void the game warranty (printed on the inside back cover of this manual) if you do any of the following:

- Substitute non-ATARI parts in the game.
- Modify or alter any circuits in the game by using kits or parts *not* supplied by Atari.

NOTE

This equipment generates, uses, and can radiate radio frequency energy and if not installed and used in accordance with the instruction manual, may cause interference to radio communications. It has been tested and found to comply with the limits for a Class A computing device pursuant to Subpart J of Part 15 of Federal Communications Commission (FCC) Rules, which are designed to provide reasonable protection against such interference when operated in a commercial environment. Operation of this equipment in a residential area or modification to this equipment is likely to cause interference in which case the user, at his own expense, will be required to take whatever measures may be required to correct the interference. If you suspect interference from an ATARI® game at your location, check the following:

- All green ground wires in the game are properly connected as shown in the game wiring diagram.
- The power cord is properly plugged into a grounded three-wire outlet.
- The game printed-circuit boards (PCB) are properly installed within the Electromagnetic Interference (EMI) cage.
- The EMI Shield PCB is properly installed and connected in series with the game PCB harness.
- All filter capacitors required on the EMI Shield PCB are properly soldered in place.

If you are still unable to solve the interference problem, please contact ATARI Customer Service. See the inside front cover of this manual for service in your area.

Table of Contents

1 Set Up

How to Use This Manual 1-1
Game Overview 1-3
New Features 1-3
Installation Requirements 1-3
Inspecting the Game 1-4
Voltage-Plug Selection and Fuses 1-4
Switch Locations 1-5
Selecting the Coin, Credit, and Game Options 1-6

2 Self Test

Self-Test Displays 2-2
Self-Test Trouble Analysis 2-8

3 Maintenance

Cleaning Requirements 3-2
Opening the Control Panel 3-2
Pushbutton Leaf Switches 3-2
Removing the Roller Control Assembly 3-2
Roller Control Maintenance 3-2
Reassembling the Roller Control Assembly 3-5
Replacing the Coupler PCB Assembly 3-5
Light and Speaker Board Assembly 3-5
Lower Speaker 3-6
Removing the CRT Assembly 3-8
Wiring the Utility Panel Controls 3-8

4 Illustrated Parts Lists

For a list of all illustrations in this manual, see following page

List of Illustrations

Figure 1-1	Game Overview	1-2
Figure 1-2	Voltage-Selection Plug and Fuse Locations	1-4
Figure 1-3	Switch Locations	1-5
Figure 2-1	Screen 1: Operator Information Display	2-3
Figure 2-2	Screen 2: Alpha Processor Display.	2-4
Figure 2-3	Screen 3: Scaling Test Display	2-5
Figure 2-4	Screen 4: Bipolar Offset Test Display	2-5
Figure 2-5	Screen 5: Crosshatch Pattern Display	2-6
Figure 2-6	Screen 6: Color Intensity Test Display	2-6
Figure 2-7	Screen 7: Color Intensity Test Display	2-7
Figure 2-8	Screen 8: Grid Pattern Display	2-7
Figure 2-9	Self-Test Trouble Analysis	2-8
Figure 3-1	Control Panel Opening and Wire Colors	3-3
Figure 3-2	Roller Control Assembly Lubrication and Adjustment	3-4
Figure 3-3	Fluorescent Light and Speaker Board Removal, Display Access	3-7
Figure 3-4	Utility Panel Wire Colors	3-9

Illustrated Parts Lists

Figure 4-1	Cabinet-Mounted Assemblies	4-2
Figure 4-2	Control Panel Assembly	4-6
Figure 4-3	Roller Control Assembly	4-8
Figure 4-4	Fluorescent Tube and Speaker Board Assembly	4-10
Figure 4-5	Utility Panel Assembly	4-11
Figure 4-6	Coinco Coin Door Assembly	4-12
Figure 4-7	Coin Acceptor Coin Door Assembly	4-15
Figure 4-8	Power Supply Assembly	4-18
Figure 4-9	PCB Mounting Hardware	4-20
Figure 4-10	Regulator/Audio II PCB Assembly	4-22
Figure 4-11	Major Havoc PCB Assembly	4-26

List of Tables

Table 1-1	Installation Specifications	1-3
Table 1-2	Switch Settings for Play Options	1-6
Table 1-3	Switch Settings for Price Options	1-7
Table 2-1	Gamma Microprocessor Faulty Component Locations	2-2
Table 2-2	Alpha Microprocessor Faulty Component Locations	2-4
Table 2-2	ROM Locations of Checksum Errors	2-4

Safety Summary

The following safety precautions apply to all game operators and service personnel. Specific warnings and cautions will be found throughout this manual where they apply.

⚠ WARNINGS ⚠

Properly Ground the Game. Players may receive an electrical shock if this game is not properly grounded! To avoid electrical shock, do not plug in the game until it has been inspected and properly grounded. This game should only be plugged into a grounded 3-wire outlet. If you have only a 2-wire outlet, we recommend you hire a licensed electrician to install a grounded outlet. Players may receive an electrical shock if the control panel is not properly grounded! After servicing any parts on the panel, check that the grounding clip is firmly secured to the metal tab on the inside of the control panel. Only then should you lock up the game.

AC Power Connection. Before connecting the game to the AC power source, verify that the proper voltage-selection plug is installed on the game's power supply.

Disconnect Power During Repairs. To avoid electrical shock, disconnect the game from the AC power source before removing or repairing any part of the game. When removing or repairing the video display, extra precautions must be taken to avoid electical shock because high voltages may exist within the display circuitry and cathode-ray tube (CRT) even after power has been disconnected. Do not touch internal parts of the display with your hands or metal objects! Always discharge the high voltage from the CRT before servicing this area of the game. To discharge the CRT: Attach one end of a large, well-insulated, 20-kV jumper to ground. Momentarily touch the free end of the grounded jumper to the anode by sliding it under the anode cap. Wait two minutes and discharge the anode again.

Use Only ATARI Parts. To maintain the safety integrity of your ATARI game, do not use non-ATARI parts when repairing the game. Use of non-ATARI parts or other modifications to the game circuitry may adversely affect the safety of your game, and injure you or your players.

Handle Fluorescent Tube and CRT With Care. If you drop a fluorescent tube or CRT and it breaks, it may implode! Shattered glass can fly six feet or more from the implosion.

Use the Proper Fuses. To avoid electrical shock, use replacement fuses which are specified in the parts list for this game. Replacement fuses must match those replaced in fuse type, voltage rating, and current rating. In addition, the fuse cover must be in place during game operation.

CAUTION

Properly Attach All Connectors. Make sure that the connectors on each printed-circuit board (PCB) are properly plugged in. Note that they are keyed to fit only one way. If they do not slip on easily, do not force them. A reversed connector may damage your game and void the warranty.

Set Up

WARNING

Shock Hazard

To avoid electrical shock, do not plug in the game until it has been inspected and properly set up for the line voltage in your area.

Do not touch internal parts of the display with your hands or metal objects!

How to Use This Manual

This manual, written for game operators and service technicians, describes your new Atari game.

Chapter 1 contains a game overview, game specifications, inspection procedures, voltage plug and fuse information, switch locations, and option information.

Chapter 2 contains self-test procedures.

Chapter 3 contains maintenance and repair procedures.

Chapter 4 contains illustrated parts lists. Notes in this chapter refer you to other places in the manual for more detailed information.

Schematic diagrams of the game circuitry are included as a supplement to this manual.

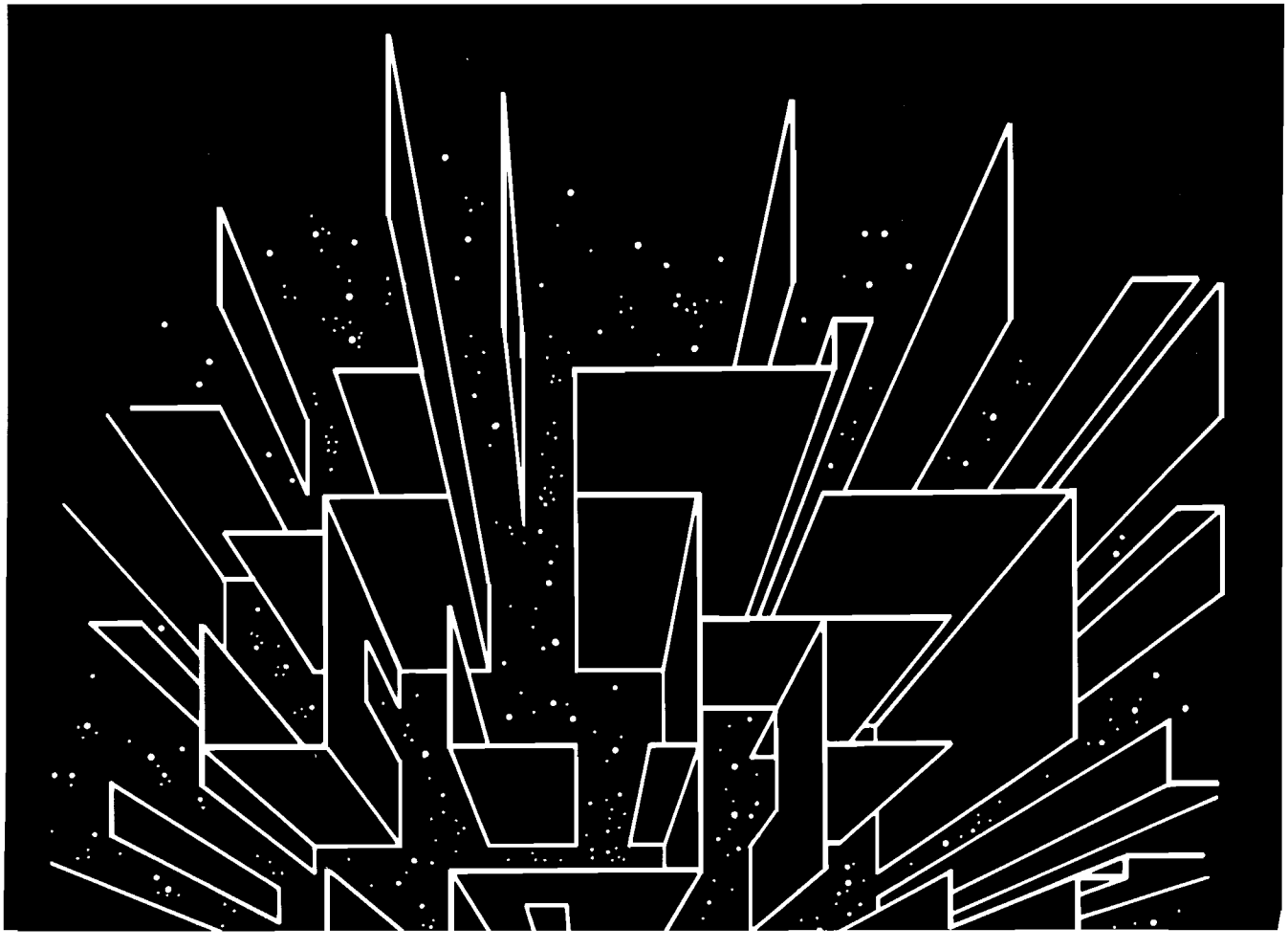

Chapter 1

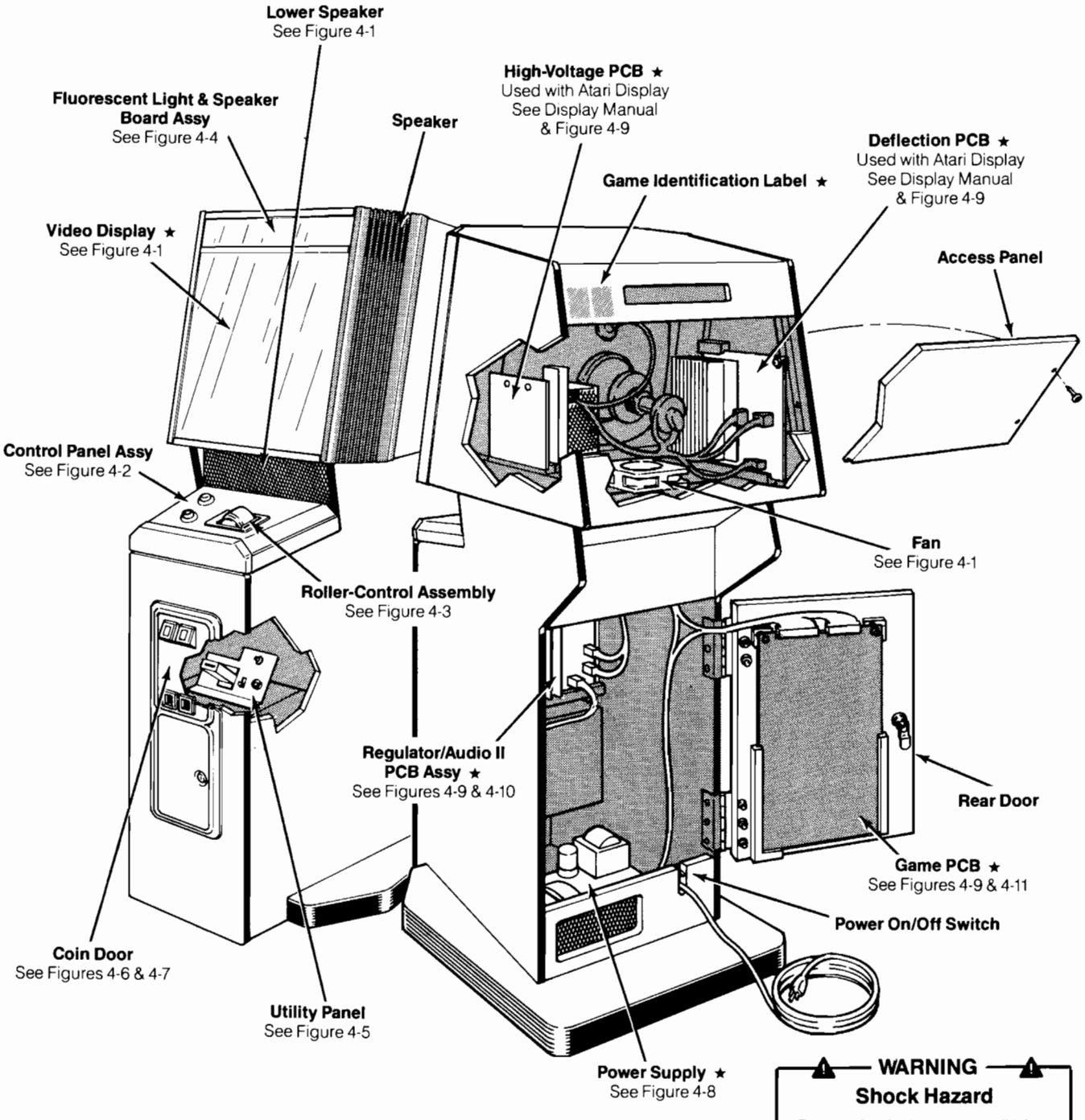

★ Item with a serial number label

⚠ WARNING ⚠

Shock Hazard

Do not plug in the game until it has been inspected. This game should only be connected to a grounded 3-wire outlet. If you have only a 2-wire outlet, we recommend you hire a licensed electrician to install a grounded outlet. Players may receive an electrical shock if this game is not properly grounded!

Figure 1-1 Game Overview

Game Overview

You are Major Havoc, leader of a brave band of clones. All from one, one from all, fighting for humanity. . . .

Eons ago the evil Vaxxian Empire overran the galaxy. Most of your ancestors were enslaved and taken to the Vaxxian homeworld. Only a few scientists escaped.

The small band of scientists cloned you, Major Havoc, to fly your Catastrofighter through a wormhole in space, leading your clone army against the dreaded Vaxxian robots to free your people by destroying the enemy reactor.

⚠ WARNING ⚠

To avoid electrical shock, do not plug in the game until you have inspected the game and selected the appropriate line voltage plug.

Do not touch internal parts of the display with your hands or with metal objects!

New Features

High-Tech Game Cabinet. A new video arcade game cabinet design delivers high visibility and increased player attraction.

Roller Control. The backlit roller control provides left-to-right and right-to-left directional movement.

Multi-Layer Printed-Circuit Board. This state-of-the-art design printed-circuit board (PCB) provides low system noise with high system reliability.

Game Within a Game. Action occurs in the lower right corner of the TACTICAL SCAN. Breakout® can be played for a few seconds before the actual Major Havoc game play starts. Earn a bonus life here!

Dual FIRE/JUMP Button. This dual-action button allows Major Havoc to jump in the maze sequence and to fire at enemy robots in the space wave.

Add-A-Coin. This feature permits you to start a new Major Havoc game at the level where you last saw the TACTICAL SCAN in your previous game play.

Secret Warp Code. The code feature rewards you for short game times as it advances to deep levels in game play. Use the roller control to dial in secret code numbers during the TACTICAL-SCAN wave.

All major parts of the cabinet are illustrated in Figure 1-1.

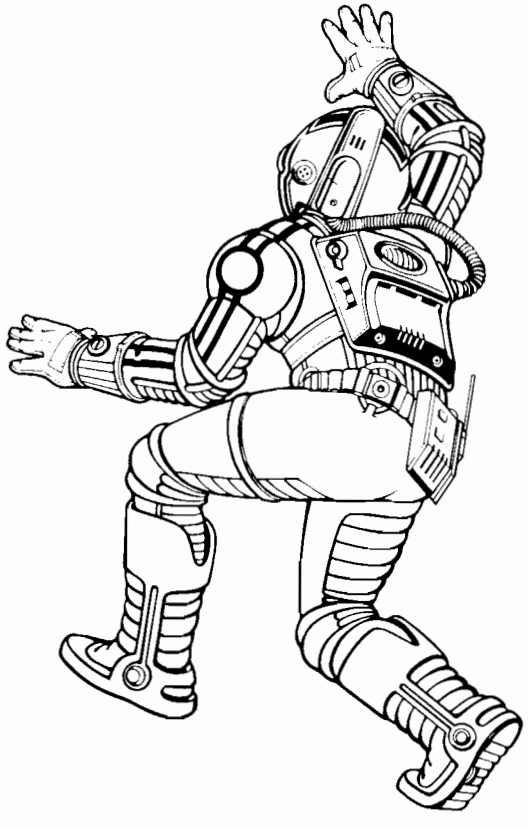

Installation Requirements

Table 1-1 describes the physical, electrical, and environmental specifications of the game.

Table 1-1 Installation Specifications

Characteristic	Requirement
Power Consumption	200 W
Temperature	0° to +32°C (+32° to +100°F)
Humidity	Not to exceed 95% relative
Line Voltage	100 to 240 VAC
Width	64.1 cm (25.25 in.)
Depth	80.3 cm (31.6 in.)
Height	170.8 cm (67.25 in.)

Inspecting the Game

Please inspect your game carefully to ensure that it was delivered to you in good condition.

1. Examine the exterior of the game cabinet for dents, chips, or broken parts.
2. Remove the screws from the rear access panel. Unlock and open this panel and the coin door. Inspect the interior of the game as follows:

   a. Ensure that all plug-in connectors (on the game harnesses) are firmly plugged in. Replug any connectors found unplugged. Do not force connectors together. The connectors are keyed so they only fit in the proper orientation. *A reversed edge connector may damage a printed-circuit board (PCB) and will void your warranty.*

   b. Ensure that all plug-in integrated circuits on each PCB are firmly plugged into their sockets.

   c. Remove the tie-wrap that secures the coiled power cord inside the cabinet. Inspect the power cord for any cuts or dents in the insulation. Repair or replace it as required. Place the square strain-relief plate in the wood slot at the bottom of the rear panel opening.

   d. Inspect the power supply. Make sure the fuse block cover is mounted in place. Check that the green ground wire is connected.

   e. Inspect other major subassemblies, such as the control panel, video display, EM1 cage, and each PCB. Make sure they are mounted securely and that the green ground wires are connected.

Voltage-Plug Selection and Fuses

The power supply in your game contains six fuses. When you replace a fuse, use the identical type fuse with the same electrical rating (see Figure 1-2).

This power supply operates on the line voltage of many countries. The power supply comes with either one, two, or three voltage-selection plugs. Plug voltages and wire colors are 100 VAC (violet wire color), 120 VAC (yellow wire color), 220 VAC (blue wire color), and 240 VAC (brown wire color).

See Figure 1-2 for placement of the voltage-selection plug. Before plugging in your game, check your line voltage. Next, check the wire color on the voltage-selection plug. Make sure the voltage-selection plug is correct for the line voltage of your location.

Now plug the game into a **grounded** 3-wire outlet.

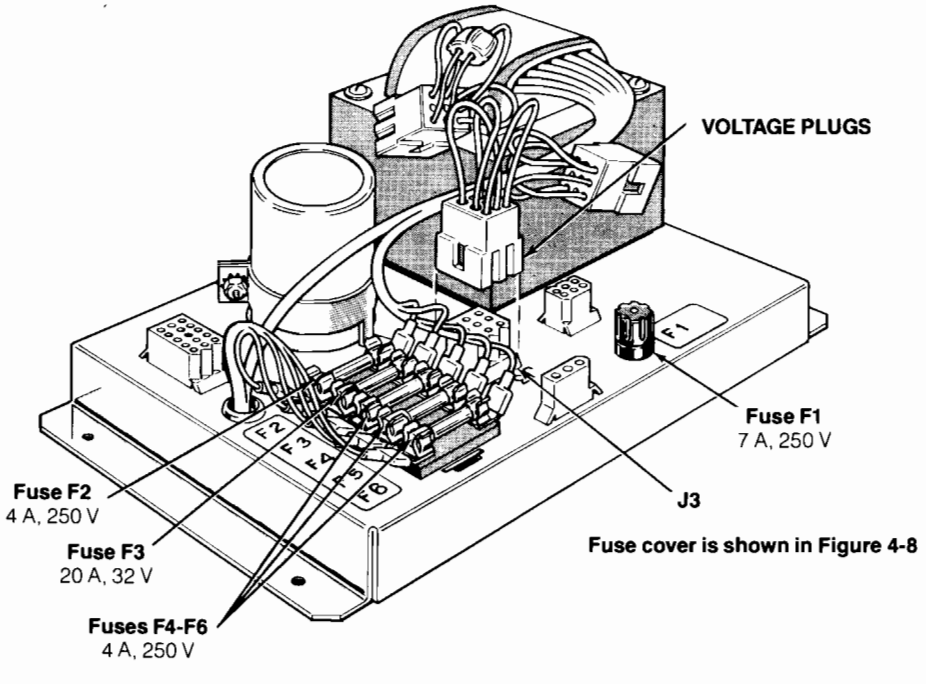

Figure 1-2 Voltage-Selection Plug and Fuse Locations

Switch Locations

Power On/Off Switch

The power on/off switch is located on the back of the cabinet on the lower left side (see Figure 1-1).

Utility Panel Switches

The volume control, coin counter(s), self-test switch, and auxiliary coin switch are on the utility panel. The utility panel is located inside the upper coin door (see Figure 1-1). The volume control adjusts the level of sound produced by the game. The coin counter(s) records the number of coins entered into the game. The self-test switch initiates the self-test mode. The auxiliary coin switch credits the game without activating a coin counter. See Figures 1-3 and 4-5 for details of these switches.

Option Switches

Major Havoc has two option switches. Figure 1-3 shows the location of these dual-inline-package (DIP) switches on the game printed-circuit board (PCB).

- Option switch SW1 at 13/14S controls game play options.
- Option switch SW2 at 8S controls whether the coins are counted on 1 or 2 counters.

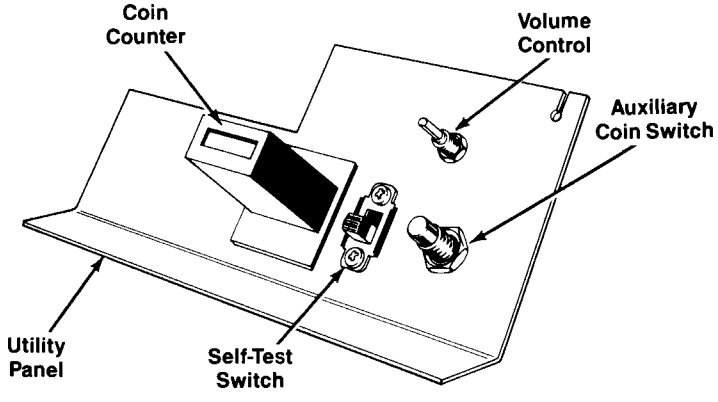

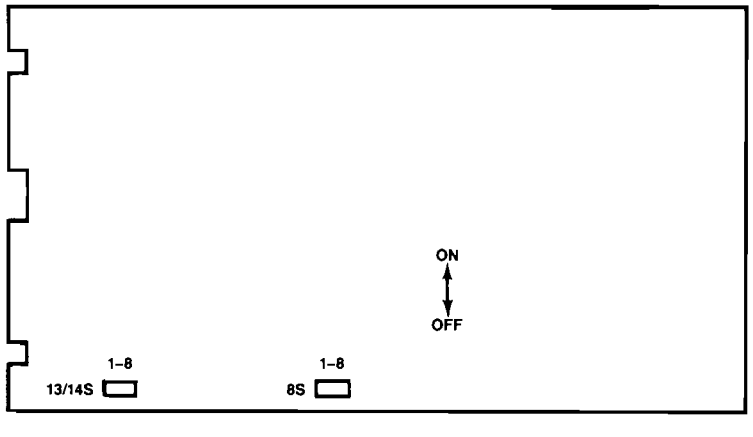

Figure 1-3 Switch Locations

Selecting the Coin, Credit, and Game Options

Settings for option switches are listed in Tables 1-2 and 1-3. Options preset at the factory are shown by the ◄ symbol; however, you may change settings according to your needs.

To verify other option selections, check the Operator Information Display that appears when you enter the Self-Test Mode. See Chapter 2 for details.

Table 1-2 Switch Settings for Play Options

Settings of 8-Toggle Switch on Game PCB *(SW1 at location 13/14S)*								Option		
1	2	3	4	5	6	7	8			
								Starting Lives		
								Free Play	1 Coin Setting	2 Coin Setting
Off	Off							2	3	5◄
On	On							3	4	4
On	Off							4	5	6
Off	On							5	6	7
								Game Difficulty		
		On	On					Hard		
		Off	Off					Medium◄		
		Off	On					Easy		
		On	Off					Demo		
								Bonus Life		
				On	On			Bonus Life at 50,000 points		
				Off	Off			Bonus Life at 100,000 points◄		
				Off	On			Bonus Life at 200,000 points		
				On	Off			No Bonus Life		
								Attract Mode Sound		
						On		Silence		
						Off		Sound◄		
								Adaptive Difficulty*		
							On	No		
							Off	Yes◄		

◄*Manufacturer's recommended settings*

**Game difficulty increases with player skill level*

Table 1-3 Switch Settings for Price Options

Settings of 8-Toggle Switch on Game PCB *(SW2 at location 8S)*								
1	**2**	**3**	**4**	**5**	**6**	**7**	**8**	**Option**
						On	**Off**	**Free Play**
						Off	Off	1 coin for 1 game (or 1 player)
						On	On	1 coin for 2 games (or 2 player)
						Off	On	2 coins for 1 game (or 1 player◄
								Right Coin Mechanism
				Off	Off			Right coin mech × 1◄
				Off	On			Right coin mech × 4
				On	Off			Right coin mech × 5
				On	On			Right coin mech × 6
								Left Coin Mechanism
			Off					Left coin mech × 1◄
			On					Left coin mech × 2
								Bonus Coin Adder
Off	Off	Off						No Bonus coins◄
Off	On	Off						For every 4 coins, game logic adds 1 coin
Off	On	On						For every 4 coins, game logic adds 2 coins
On	Off	Off						For every 5 coins, game logic adds 1 coin
On	Off	On						For every 3 coins, game logic adds 1 coin
								2-Coin Minimum*

◄*Manufacturer's recommended settings*

* *This game has the ability to select the 2-coin-minimum capability, which requires the player to pay for two games in advance. If you want this capability, short pin 6 on 13N to ground by soldering a short piece of wire from ground to this point.*

Self Test

This game will test itself and provide data to show that the game circuitry and controls are operating properly. Self-test data is presented visually on the video display and audibly through the speakers. No additional equipment is required.

We suggest you perform a self-test when you first set up, each time you collect money, change the game options, or suspect game failure.

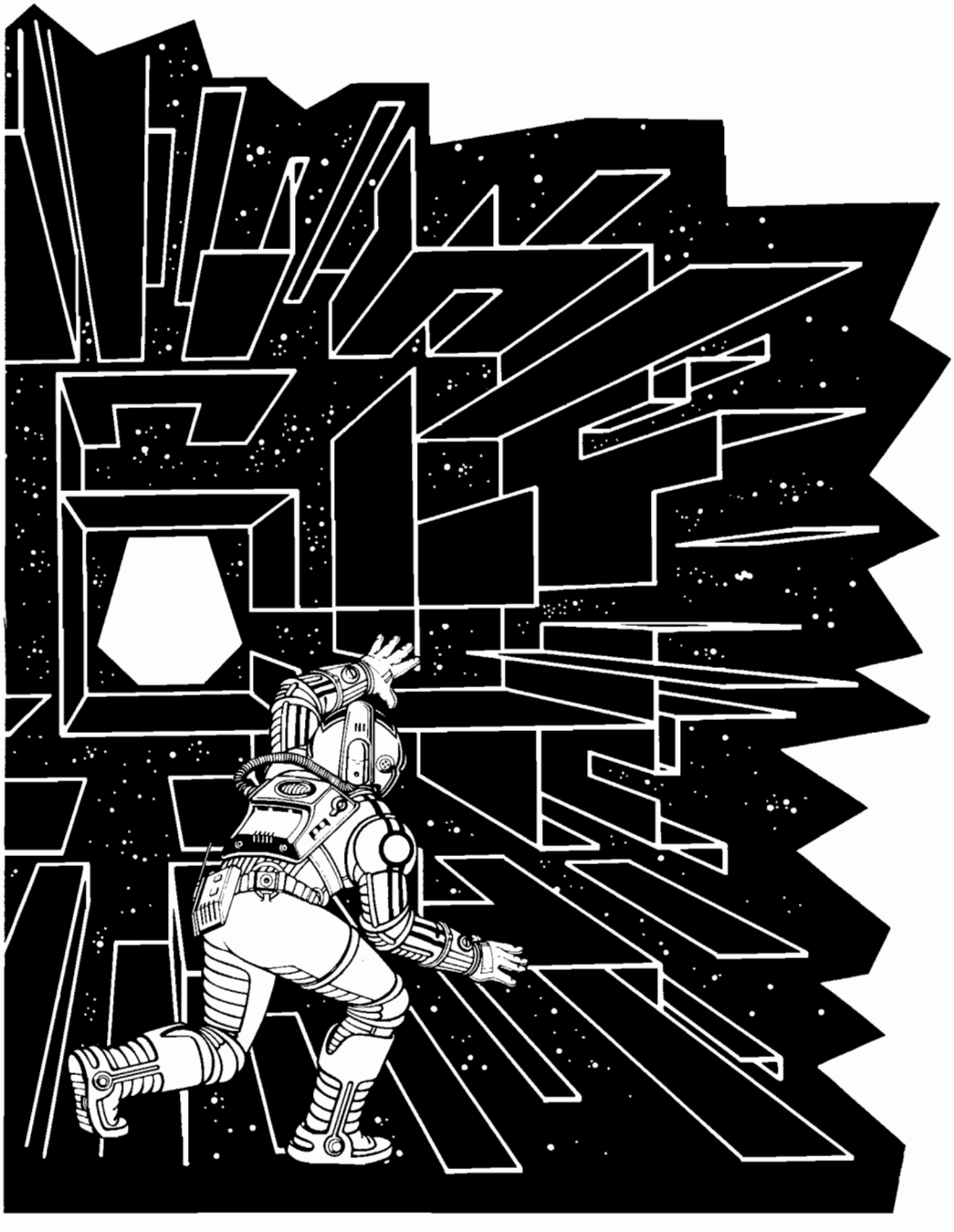

Chapter 2

Self-Test Displays

The self-test switch and the auxiliary coin switch are located on the utility panel inside the coin door. The option switches are on the game printed-circuit board (see Figure 1-3).

Enter the Self-Test Mode by turning *on* the self-test switch. When the self-test switch is turned *on* during Attract, Ready-to-Play, or Game Play Modes, the game will go to the Operator Information Display (see Screen 1 of Self-Test Mode), which also contains the gamma microprocessor display (see Figure 2-1).

Screen 1: Operator Information Display

This display shows the condition of the RAM and ROM for the gamma microprocessor. If there is a RAM or ROM failure, the display will identify the failed component and give its location. See Table 2-1 for the location of the failed gamma microprocessor component on the game PCB.

NOTE

The following self-test displays are arranged in the sequence in which they occur after the self-test switch is set to the *on* position. Press the auxiliary coin switch to end each display and obtain the next display. If the self-test procedures are not performed in sequence, pressing the auxiliary coin switch will advance the game through the displays until the desired display is obtained. If the game is turned on with the self-test switch in the on position, the game will go directly to the Operator Information Display.

To return to the Attract Mode, turn *off* the self-test switch.

NOTE

The game-reset circuitry must be operating or the game will lock up with a blank screen. If a locked condition occurs, turn the self-test switch *off* and turn the game *off* and back *on*. If the game does not restart after this action, troubleshooting of the game-reset circuitry may be necessary.

Table 2-1 Gamma Microprocessor Faulty Component Locations

Identifier	Meaning	Location
R	Gamma RAM Error	9P/Q
O	Gamma ROM Error	9S
P	Custom IC Error	13Q
E	EEROM Error	9Q/R

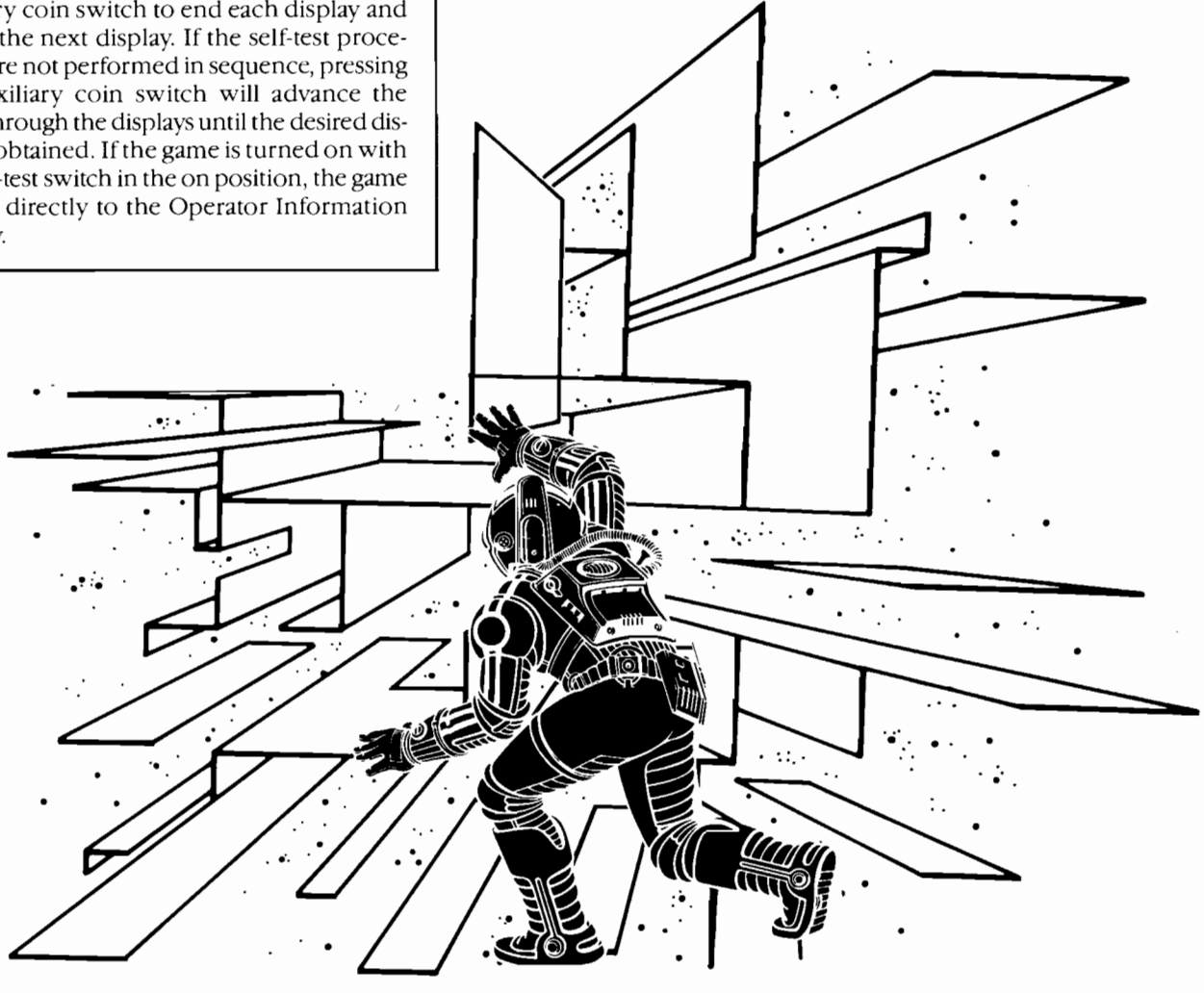

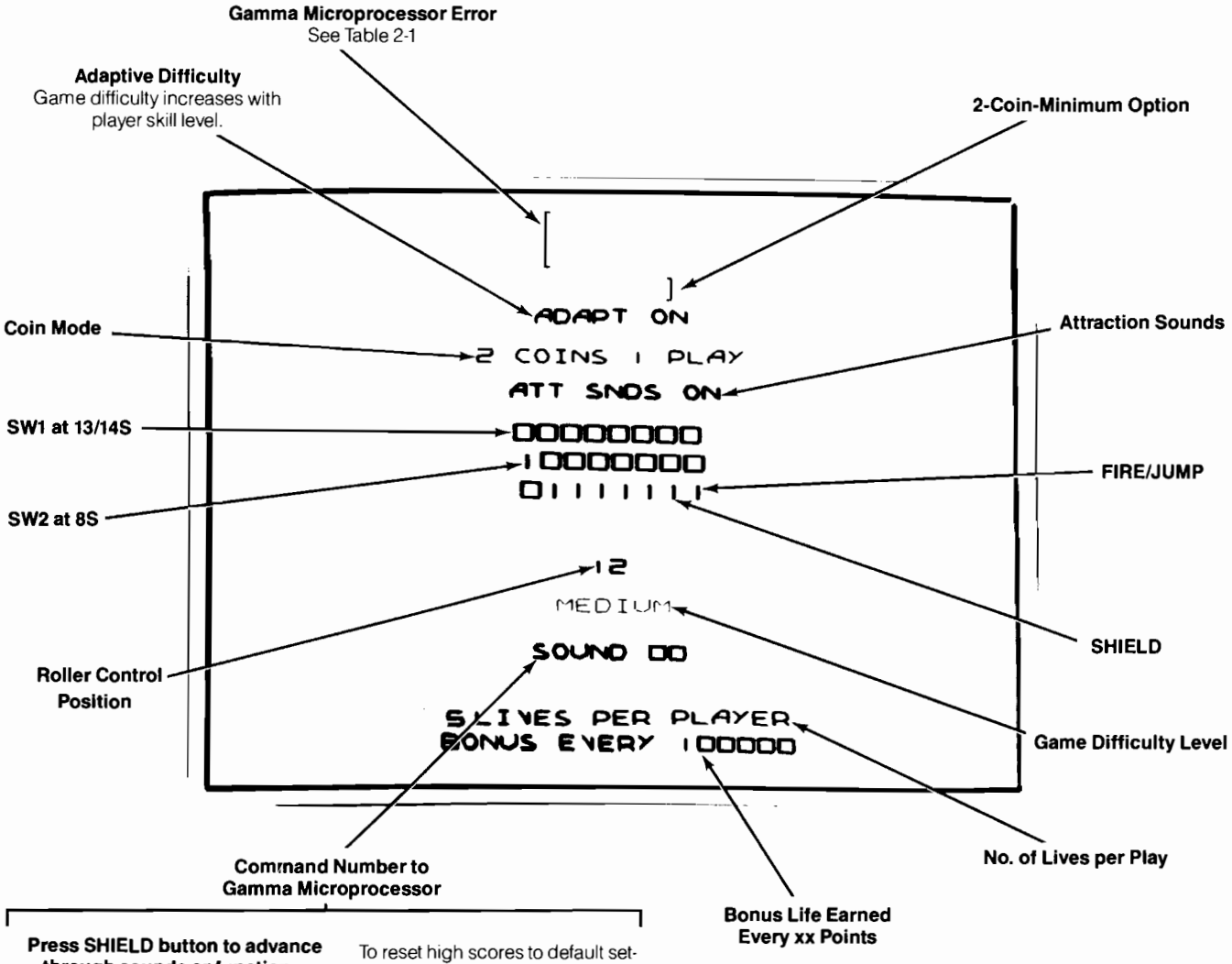

Press SHIELD button to advance through sounds or functions.

Press FIRE/JUMP button to activate the sound or function.

Reset High Scores
Activating this function replaces the game High-Score Table with the default set of high scores. To see the High-Score Table, enter the Attract Mode and spin the Roller Control to the left. Spin the Roller Control to the right to re-enter the Attract Mode.

To reset high scores to default settings, hold down the right coin switch. Then, depress and release FIRE/JUMP button. You will hear a loud hissing sound. Wait for this sound to finish before exiting self test. Wait 10 seconds before turning the game off or leaving the Self-Test Mode.

Left Coin Counter

Right Coin Counter

Sounds Off

Sound Values

Figure 2-1 Screen 1: Operator Information Display

Screen 2: Alpha Microprocessor Test Display

The alpha microprocessor is responsible for much of the game play. Table 2-2 helps you determine the location of a faulty RAM on the game PCB.

Table 2-2 Alpha Microprocessor Faulty Component Locations

Identifier	Hex Location	Definition	PCB Location
A	0000–07FF	RAM Error	1J/K
B	0800–08FF & Swap 0200–0700	RAM	1H/J
C	Vector Gen.—Low	RAM Error	6M/N
D	Vector Gen.—High	RAM Error	6L/M
E	Commun. RAM	Error	1F

ROM Checksums

See Table 2-3 to determine the ROM location of a checksum error in the alpha microprocessor.

NOTE

If the ROM checksum is correct, neither the self-test ROM identifier (a single character) nor the checksum (a double character) appears on the screen.

Table 2-3 ROM Locations of Checksum Errors

Identifier	PCB Location
A	1N/P
9	1N/P
8	1Q
7	1Q
6	1L*
5	1M/N*
4	6J/K
3	6J/K
2	6H
1	6H
0	6K/L*

**This ROM must be good for self test to function.*

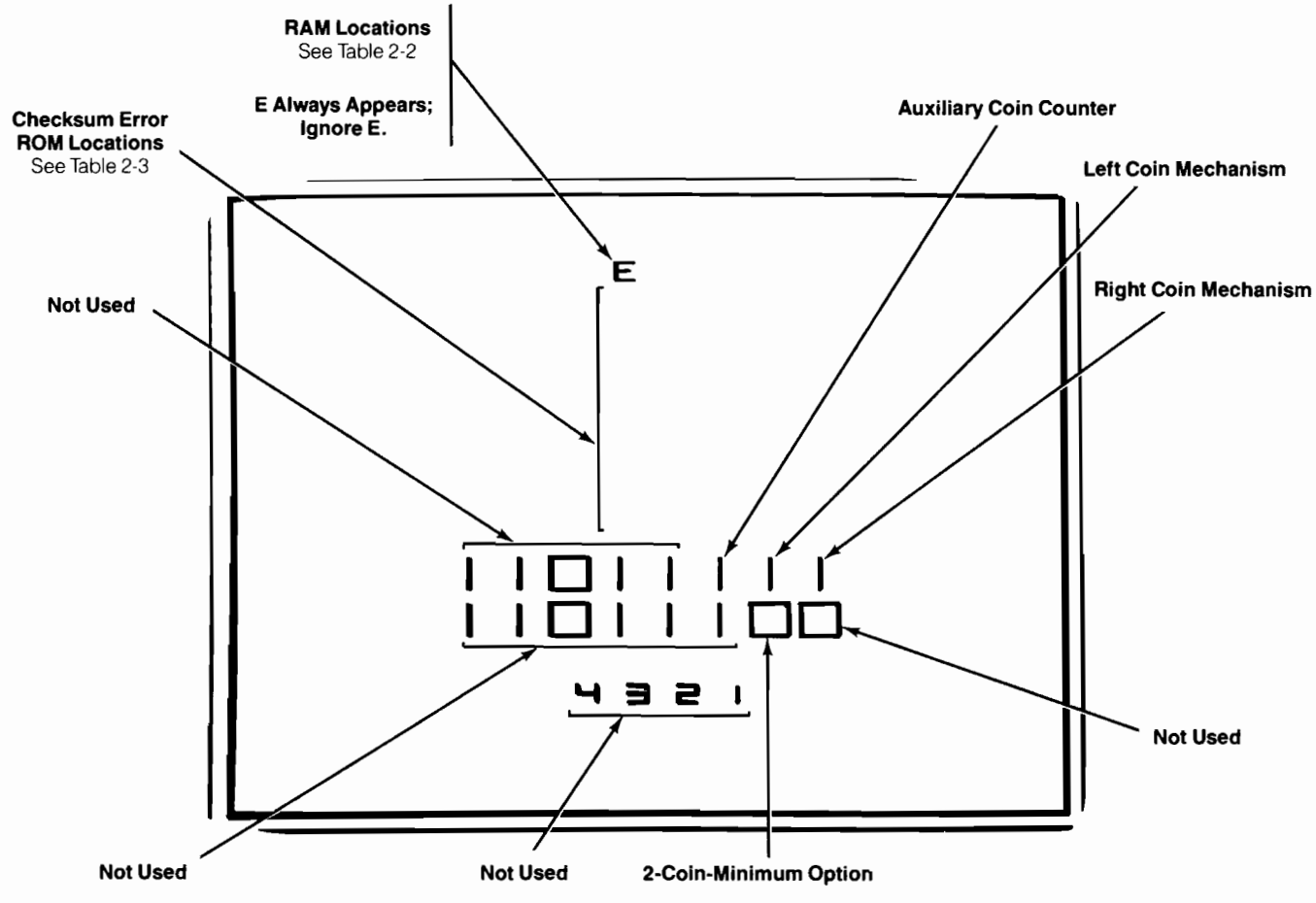

Figure 2-2 Screen 2: Alpha Processor Display

Screen 3: Scaling Test Display

A red outline frames the sides of the screen during this test. Inside this red outline a white box of decreasing size appears inside a white frame. The white box should shrink smoothly and disappear into the center indicator on the screen. If a sudden change in the size of the square occurs, an error may exist. This sequence will repeat indefinitely until you press the auxiliary coin switch. This pattern tests the binary and linear scaling circuitry.

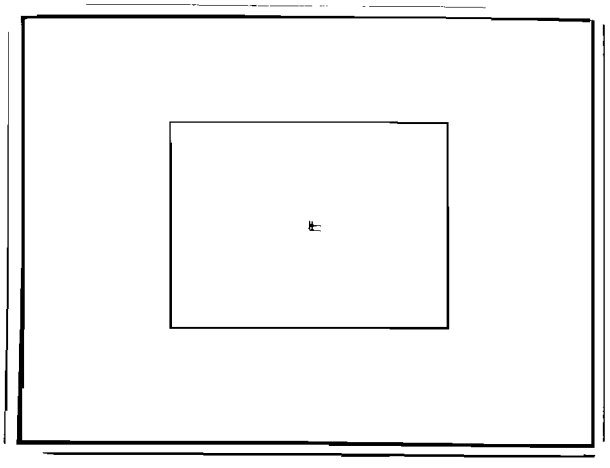

Figure 2-3 Screen 3: Scaling Test Display

Screen 4: Bipolar Offset Test Display

NOTE

This procedure should be performed only after the game has been on for at least 15 minutes to ensure that the game PCB is fully warmed up.

Press the auxiliary coin switch to obtain the Bipolar Offset Test (BIP) Display as shown in Figure 2-4. The lines in the center of the screen should cleanly overlap to form a single orange square. If you see red and green lines, adjust the X and Y bipolar offset potentiometers as described on the Linear Scaling schematic diagram in the Schematic Package Supplement (SP-252). These potentiometers are designated XBIP (R80) and YBIP (R81). The upper right-hand corner of the orange square is the critical adjustment point.

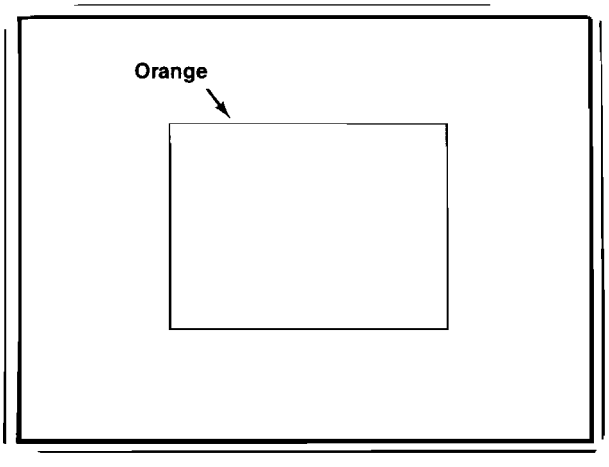

Figure 2-4 Screen 4: Bipolar Offset Test Display

Screen 5: Crosshatch Pattern Display

Press the auxiliary coin switch to obtain the Crosshatch Pattern Display as shown in Figure 2-5. Verify the following display characteristics:

- All four corners of the red outline must be off the screen, while all four corners of the white outline are completely visible. If not, adjust potentiometers XSIZE (R34), YSIZE (R48), XCENTER (R39), and YCENTER (R55) as described on the X and Y Output schematic diagram in the Schematic Package Supplement (SP-252).
- A white frame filled with a crosshatch pattern appears inside the red outline.
- The crosshatch corners are closed and the diagonal lines form symmetrical diamond-shaped squares. These lines should be straight within $\frac{3}{16}$-inch over their length (visually straight is satisfactory). If otherwise, adjust potentiometers XLINEARITY (R38) and YLINEARITY (R50) as described on the X and Y Output schematic diagram in the Schematic Package Supplement (SP-252).
- The crosshatch pattern is not tilted more than ¼-inch between corners.
- The pattern is a uniform white color.
- A line of alphanumeric characters stretches across the display.

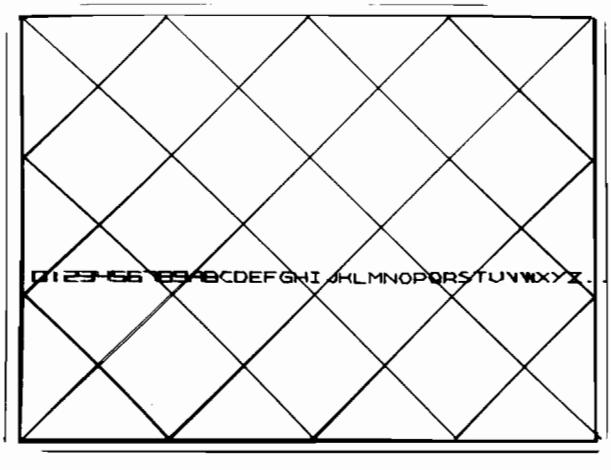

Figure 2-5 Screen 5: Crosshatch Pattern Display

Screen 6: Color Intensity Test Display

Press the auxiliary coin switch to obtain the Color Intensity Test Display as shown in Figure 2-6. Verify the following display characteristics:

- Top row of color bars red, blue, and green.
- All three sets of color bars have six lines dim at the top and increasing in intensity at the bottom.
- Bars underneath the top row of color bars are white.
- Bars underneath the white color are yellow, light blue, and purple.

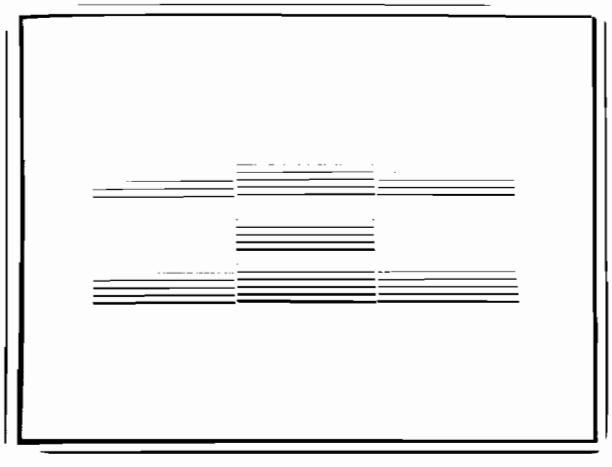

Figure 2-6 Screen 6: Color Intensity Test Display

This test checks the seven screen colors and six intensities of each color. If the intensities do not progress from dim at the top of each color group to bright at the bottom, there is a problem in the Z-axis of the game PCB or in the video display. If the colors are not as described, there is a problem with the red, green, or blue output of the game PCB or with the video display circuitry. Use this pattern for tracking adjustments and for brightness adjustment. Refer to the Color X-Y Display Manual for the brightness adjustment procedure or to determine the possible cause of failure.

Screen 7: Color Intensity Test Display

Press the auxiliary coin switch to obtain the Color Intensity Test Display as shown in Figure 2-7. Sixteen intensities (15 visible and 1 with zero intensity) of each of 16 colors are displayed. One color is black, resulting in an empty column. Every location in the color RAM is used. Use this screen for vector generator and color RAM troubleshooting. Do not use it for adjustment or quality checking.

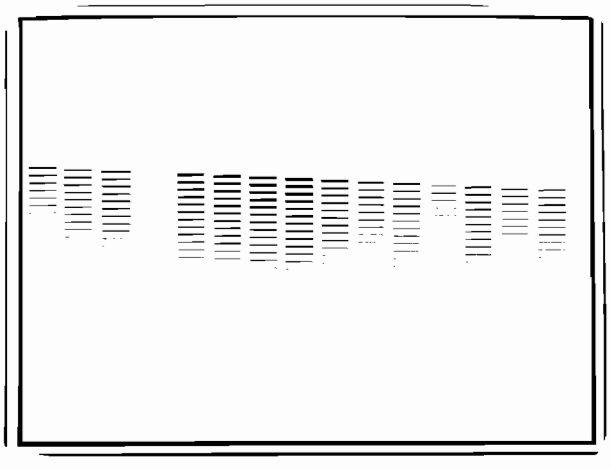

Figure 2-7 Screen 7: Color Intensity Test Display

Screen 8: Grid Pattern Display

Press the auxiliary coin switch to obtain the Grid Pattern Display outlined in red as shown in Figure 2-8. Use this display to check for proper convergence and color purity. The horizontal lines may or may not touch the right side of the square.

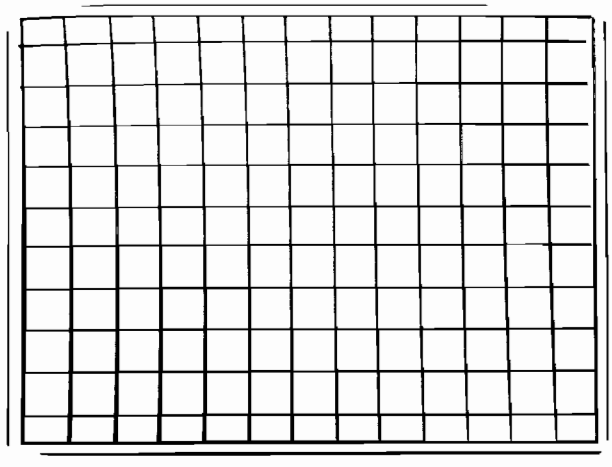

Figure 2-8 Screen 8: Grid Pattern Display

Self-Test Trouble Analysis

Figure 2-9 provides a trouble analysis diagram to help you use the Self-Test Mode to determine the probable cause of trouble and the possible remedies.

NOTE

The game-reset circuitry must be operating or the game will lock up with a blank screen. If a locked condition ever occurs, turn the self-test switch *off*. Then turn the game *off* and back *on*. If the game does not restart after this action, troubleshooting of the game reset circuitry may be necessary.

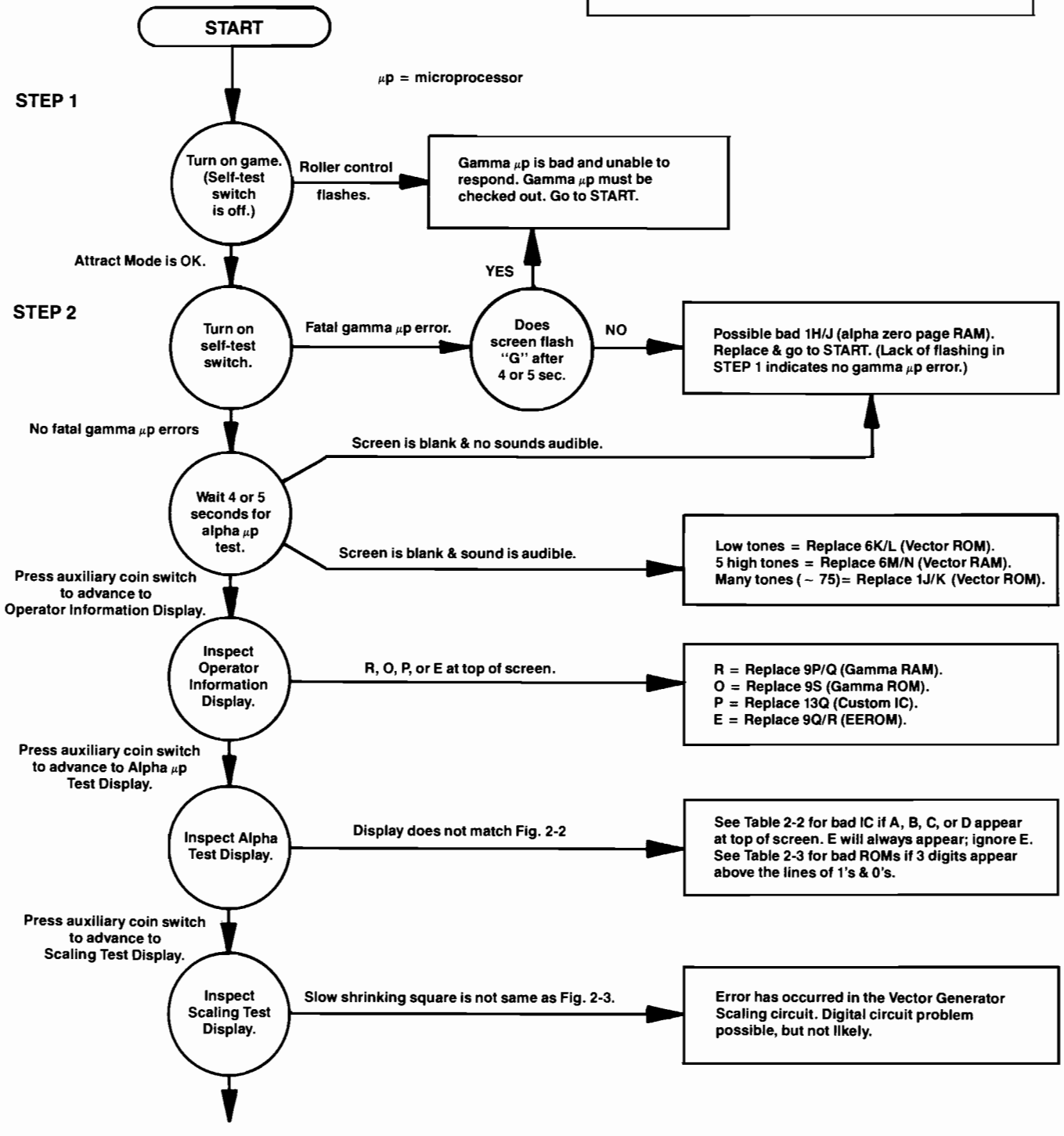

Figure 2-9 Self-Test Trouble Analysis Diagram

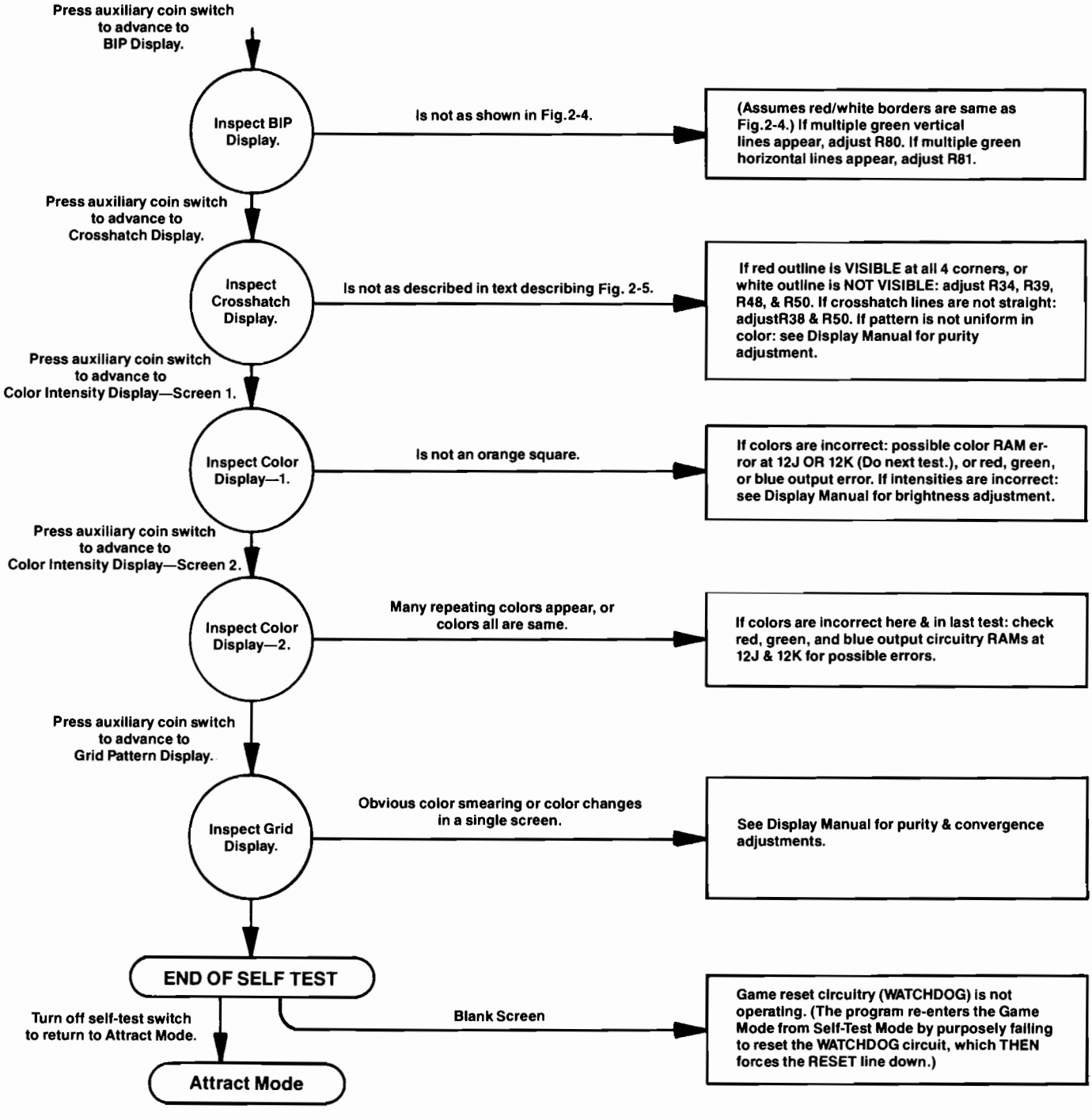

Figure 2-9 Self-Test Trouble Analysis Diagram, continued

Maintenance

WARNING

To avoid possible electrical shock hazard, unplug the game prior to performing any maintenance.

The maintenance procedures provided in this chapter are for those items which are subject to the most severe use. To assure the maximum trouble-free operation from this game, Atari recommends that periodic routine maintenance be performed on the game components described in the following procedures. How often routine maintenance is performed depends upon the game environment and frequency of play.

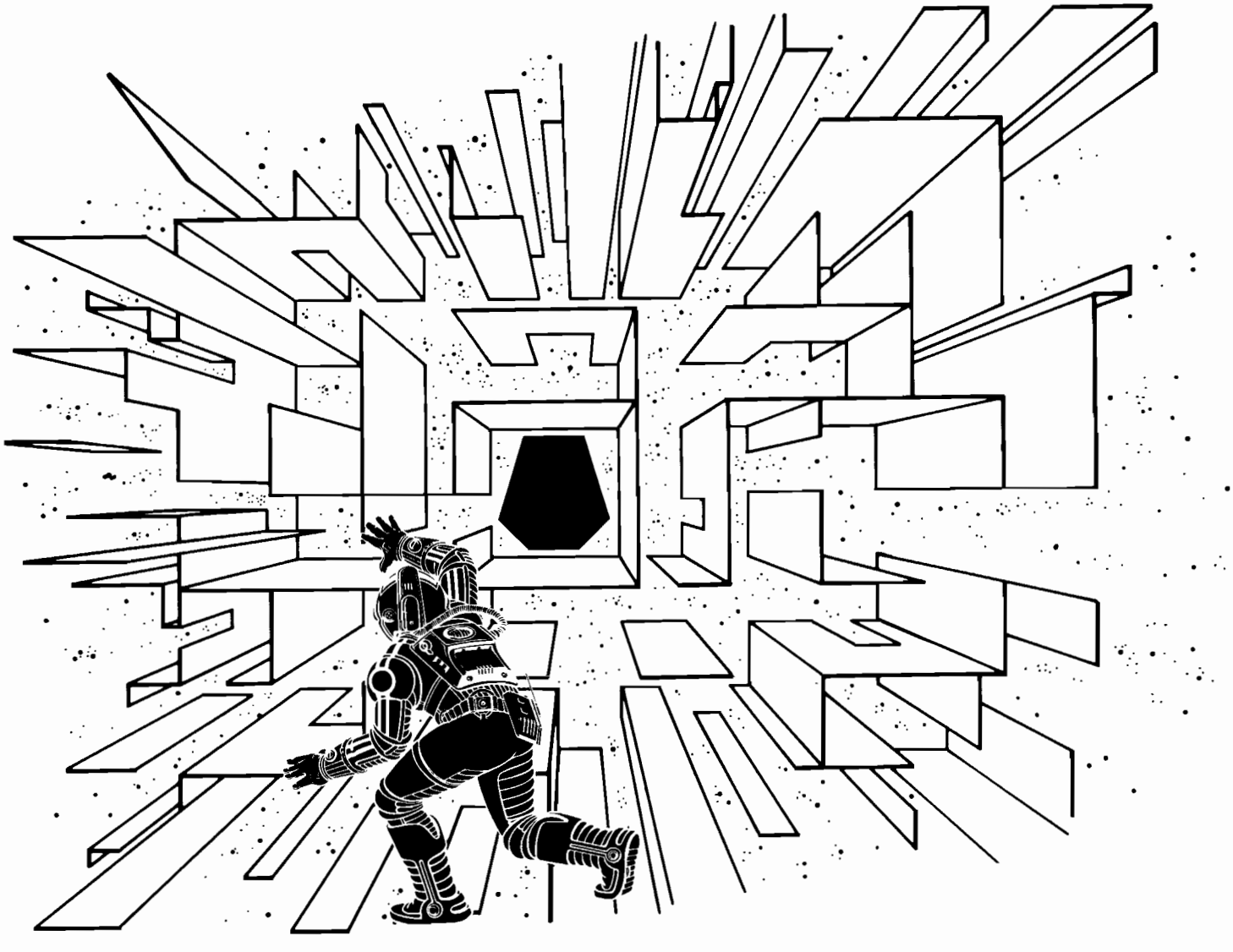

Chapter 3

Cleaning Requirements

This game cabinet and the display shield may be cleaned with any non-abrasive household cleaner. A toothbrush may be used to remove any stubborn build-up of residue in the coin path, on the plastic roller, or drive and idler shafts of the roller control. Be sure to lubricate the shaft bearings after cleaning. Compressed air is also recommended for cleaning dust from the interior of the cabinet.

Opening the Control Panel

Perform the following procedure to open the control panel:

1. Unlock and open the coin door. Reach up through the coin-door opening to the top of the front panel and release the spring-draw latch (see Figure 3-1).
2. Close the coin door.
3. Lift the front of the control panel by exerting upward pressure on both sides. Slide it forward and tilt it toward you.
4. Hook the control panel over the front of the cabinet using the bracket that is part of the black aluminum control-panel cap (see Figure 3-1).
5. Disconnect the control harness before moving the control panel to a work surface.

Pushbutton Leaf Switches

1. With the control panel open, adjust the leaf switch contacts for a narrow gap. Don't burnish the contacts. To clean them, use electrical contact cleaner.
2. To replace a leaf switch, remove the screw with a Phillips-head screwdriver.
3. To remove the switch pushbutton, turn the stamped nut with a wrench in a counterclockwise direction, as seen from the inside of the control panel. The ring on the outside of the control panel should not spin.
4. Reinstall the pushbutton switch. Reconnect the harness wires to the switch terminals as shown in Figure 3-1.

Removing the Roller-Control Assembly

Perform the following procedure to remove the roller control from the control panel:

1. Open the control panel as previously described in this chapter and disconnect the wires from the lamp socket. Disconnect the harness at the four-pin connector on the coupler PCB assembly.
2. Remove the nuts and carriage bolts that secure the roller-control assembly to the control panel (see Figure 3-1).

Roller-Control Maintenance

Routine preventive maintenance of the roller-control assembly consists primarily of lubricating the shaft bearings and checking the mounting screws and washers for proper tightness approximately every four months. The roller-control assembly consists of a roller, a drive shaft, an idler shaft, upper and lower frames, and a coupler PCB assembly. Refer to Figure 3-2 for the location of the parts mentioned in the following procedures.

Routine Maintenance and Disassembly

1. Open the control panel and remove the roller-control assembly as previously described in this chapter.
2. Use a Phillips-head screwdriver to remove the pan-head screws that secure the upper and lower frames (see Figure 3-2).
3. Carefully lift the upper frame straight up from the assembly.

CAUTION

Be sure to keep the drive studs in the upper frame. They must be in place during reassembly or the roller will not function.

4. Remove the plastic roller.
5. Apply two drops of a light machine oil, such as 3-In-One oil, to the inside of the four shaft bearings. Wipe off any excess oil from the shafts.
6. The contact area of the drive shaft may have dirt build-up from use. Remove the residue as previously described in this chapter under Cleaning Requirements.
7. Use the appropriate hex-head wrench to check the tightness of the socket-head screw that secures the encoding wheel to the drive shaft. Use a pin or small screwdriver to steady the shaft. Refer to Figure 3-2 for an illustration of the the shaft screw location.
8. Lift the idler shaft and bearings from the lower frame. Be careful not to lose the bearings.
9. Slide the bearings off each end of the idler shaft.
10. Wipe off any dirt build-up from the shaft with a soft clean cloth.
11. Lift the drive shaft with bearings and encoding wheel from the lower frame. Be careful not to lose the end bearing.

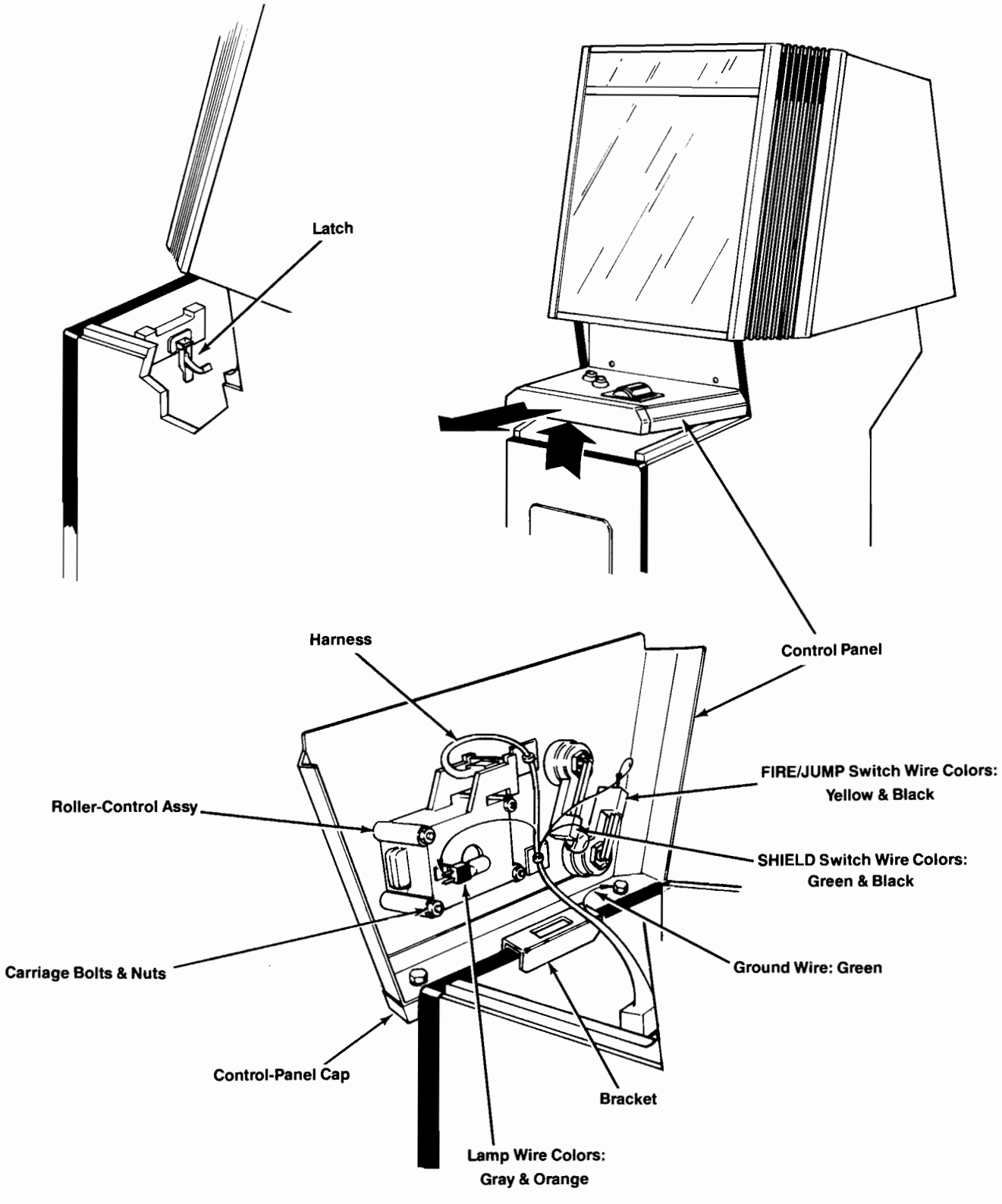

Figure 3-1 Control Panel Opening and Wire Colors

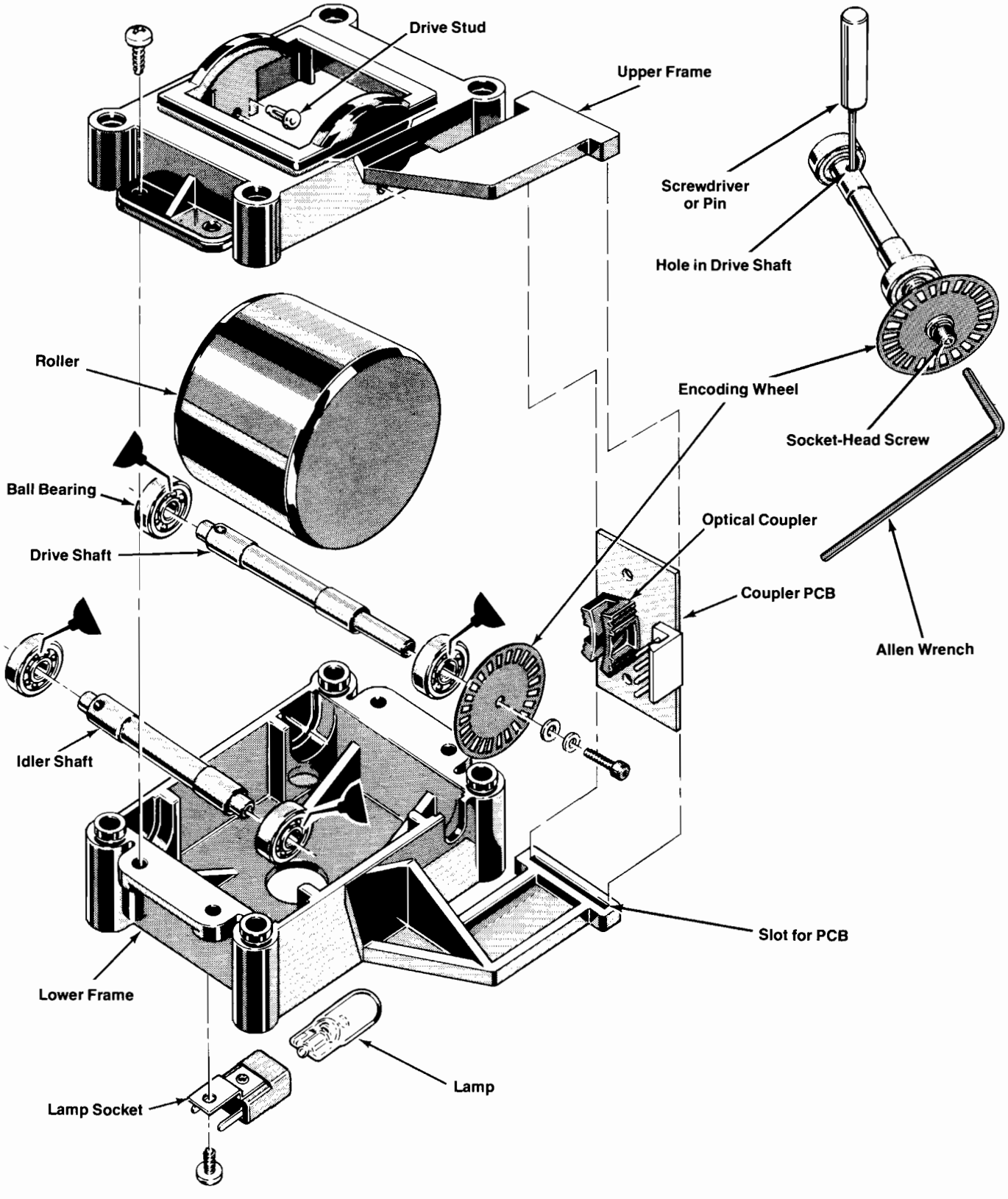

Figure 3-2 Roller-Control Assembly Lubrication and Adjustment

12. Remove the metal encoding wheel by loosening the socket-head screw with an Allen wrench. Be careful not to lose the two small washers and screw.
13. Gently slide the other bearing off the end of the drive shaft.
14. Wipe off any dirt build-up from the shaft with a soft clean cloth.
15. Reassemble the roller-control assembly as described in the following procedure.

Reassembling the Roller-Control Assembly

Perform the following procedure to reassemble the roller control (see Figure 3-2):

1. Remount the bearings, encoding wheel, washers, and socket-head screw on the drive shaft.
2. Reinstall the drive shaft in the lower frame.
3. Refer to Figure 3-2 and tighten the encoding wheel by inserting a ⅛-inch diameter pin or screwdriver through the hole in the shaft. Tighten the socket-head screw with an Allen wrench.
4. Remount the bearings on each end of the idler shaft.
5. Reinstall the idler shaft in the lower frame.
6. Reinstall the plastic roller in the lower frame.
7. Reinstall the coupler PCB assembly in the lower frame.
8. Position the upper frame over the lower frame so the four screw holes are aligned and the coupler PCB assembly is secured.

CAUTION

Be sure to keep the drive studs in the upper frame. They must be in place during reassembly or the roller will not function.

9. Use a Phillips-head screwdriver to tighten the four screws securing the upper and lower frames to each other.
10. Reinstall the roller-control assembly in the control panel using the nuts and carriage bolts.
11. Reconnect the control harness.
12. Reconnect the wires to the lamp socket.

Replacing the Coupler PCB Assembly

To replace the coupler PCB assembly after the roller-control assembly has been removed from the control panel and disassembled, perform the following procedure (see Figure 3-2):

1. Disconnect the four-pin connector and lift the coupler PCB assembly from its slot.
2. To reinstall the coupler PCB assembly, place the PCB in the slot in the lower frame and reconnect the four-pin connector.

CAUTION

When you reinstall the coupler PCB assembly, make sure that the metal encoding wheel is not bent or damaged. Be sure the encoding wheel turns freely between the two halves of the radial optical coupler.

Light and Speaker Board Assembly

Removing the Light and Speaker Board Assembly

Perform the following procedure to remove the light and speaker board assembly from the game (see Figure 3-3):

1. Remove the screws from the rear access panel of the game cabinet with a Phillips-head screwdriver.

2. Disconnect the harnesses from the fluorescent light assembly and from the speakers.
3. From the front of the cabinet, use an Allen wrench to remove the screws from the attraction shield upper retainer.
4. Slide both the attraction shield and the semi-rigid film that is behind the shield up and out of the extruded metal speaker grilles.

NOTE

A plastic U-shaped molding is firmly fitted on each side of the attraction shield and on each side of the display shield. These moldings should stay on when you remove the shields.

5. Remove the H-shaped retainer between the attraction shield and the display shield.
6. Slide the display shield up and out of the extruded metal speaker grilles.
7. Carefully remove the display bezel.
8. Remove the screws securing the extruded metal speaker grilles to the cabinet walls on both sides of the video display.
9. Remove the screws securing the light-and-speaker-board cleat to the display shelf at the top of the display.
10. From the back of the cabinet, remove the screws securing the light and speaker board to the side cleats.
11. Pull the fluorescent light and speaker board assembly out of the front of the cabinet.

Speaker Replacement

To replace either of the speakers attached to the light and speaker board, you must first remove the fluorescent light and speaker board assembly from the game cabinet (see Figure 3-3).

Perform the following procedure to replace a speaker:

1. Remove the fluorescent light and speaker board assembly as previously described.
2. With the fluorescent light and speaker board assembly out of the cabinet, disconnect the two snap-on connectors from each speaker.
3. Remove the hardware securing each speaker to its mounting grille/bracket.
4. Mount each new speaker to its mounting grille/bracket with the appropriate hardware.
5. Reconnect the snap-on connectors to each speaker. The white wire connects to the positive (+) terminal on the left speaker. The brown wire goes on the negative (unmarked) terminal on the right speaker (see the wiring diagram in SP-252).

NOTE

The positive terminal on the speaker is marked with either a plus sign (+) or a painted red dot.

Reinstalling the Fluorescent Light and Speaker Board Assembly

1. Carefully slide the fluorescent light and speaker board assembly into the upper front of the cabinet.
2. Replace the screws securing the light-and-speaker-board cleat to the display shelf at the top of the display.
3. From the back of the cabinet, replace the screws securing the light and speaker board to the side cleats.
4. From the front of the cabinet, reinstall the extruded metal speaker grilles on both sides of the video display with the appropriate hardware.
5. Slide the bottom edge of the video-display bezel into the retaining slot at the bottom of the cabinet head. Position the remaining three sides of the bezel in place around the video display.
6. Replace the video display shield (with the plastic moldings attached) by sliding the bottom edge into the slots of the extruded metal speaker grilles on either side of the video display.
7. Slide the attraction panel (with the plastic moldings attached) and semi-rigid film into the speaker grilles in front of the fluorescent light and speaker board assembly.
8. Use an Allen wrench to replace the hardware that secures the attraction shield upper retainer to the cabinet.
9. From the back of the cabinet, reconnect the 3-pin connector to the fluorescent light harness and the 2-pin connector to each speaker.
10. Use a Phillips-head screwdriver to replace the hardware that secures the upper access panel to the cabinet.

CAUTION

This speaker is held by wedge only at the top. When reinstalling, slide the top of the speaker into the wedge before centering it over the panel opening and replacing the screws.

Lower Speaker

Access to the lower speaker is from inside the back of the cabinet (see Figure 3-3). Disconnect the speaker harness and the two snap-on connectors. Remove the screws securing the speaker to the speaker panel.

The lower speaker grille may be removed from the front of the cabinet only with a square-drive screwdriver. The grille should be considered permanently installed.

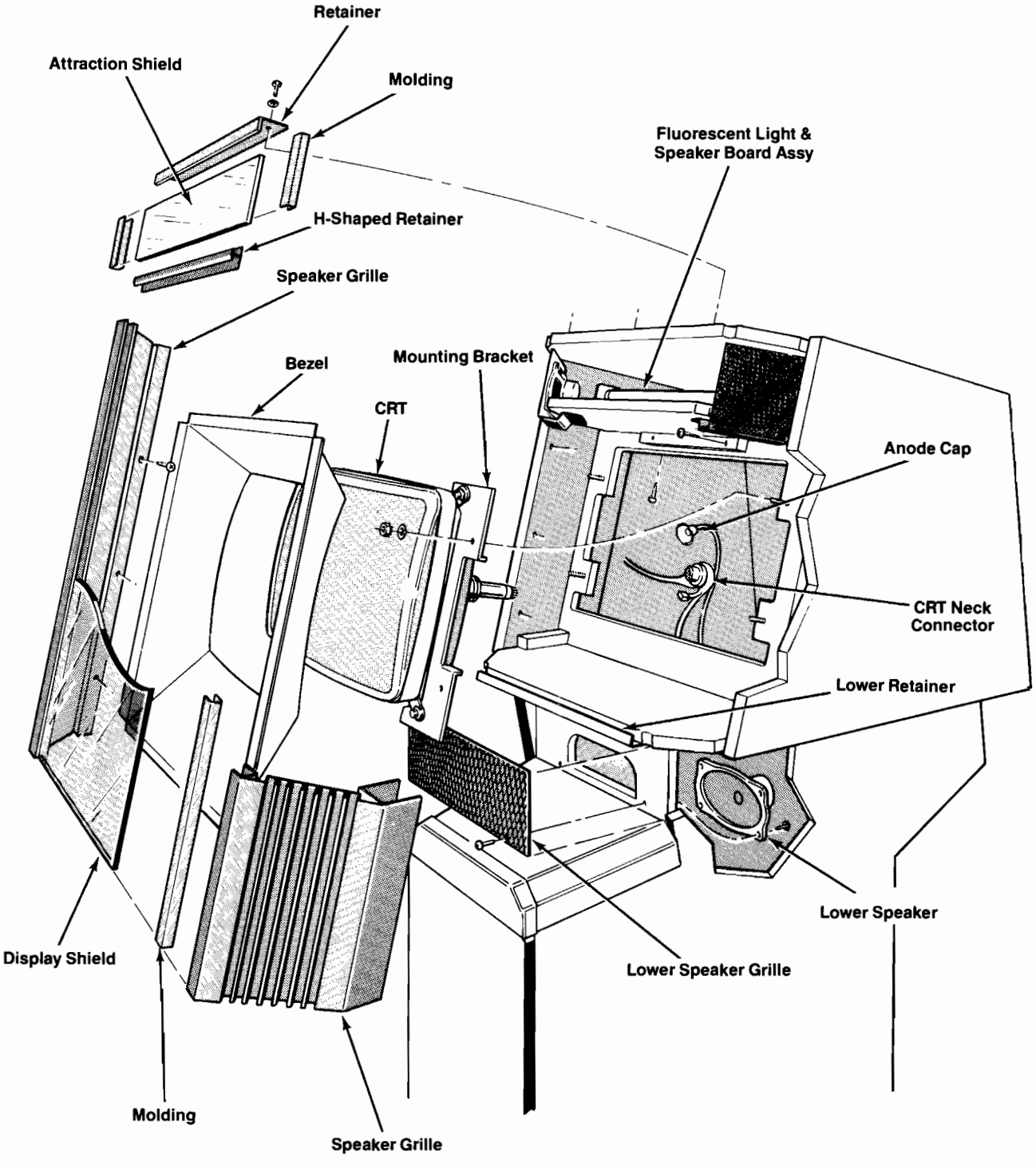

Figure 3-3 Fluorescent Light and Speaker Board Removal, Display Access

Removing the CRT Assembly

WARNINGS

High Voltage

This display contains high voltages capable of delivering lethal quantities of energy. To avoid danger, do not attempt to service the display until you have observed all precautions necessary for working on high-voltage equipment.

X-Radiation

This display has been designed for minimum X-radiation hazard. However, to avoid possible exposure to soft X-radiation, never modify the high-voltage circuitry.

Implosion Hazard

The cathode-ray tube assembly may implode if struck or dropped. Shattered glass may cause personal injury within a 6-foot radius. To reduce the risks of injury to people or of damage to the game components, we recommend that two people perform the following removal procedures.

Perform the following procedure to remove the cathode-ray tube (CRT) assembly from the game (see Figure 3-3):

1. Remove the rear access panel from the cabinet.
2. Discharge the high-voltage from the CRT before proceeding. The video display contains a circuit for discharging the CRT high voltage to ground when power is removed. However, to make certain, always discharge the CRT as follows:
   a. Attach one end of a large, well insulated, 18-gauge jumper wire to ground.
   b. Momentarily touch the free end of the grounded jumper to the anode by sliding it under the anode cap.
   c. Wait two minutes and repeat part b.
3. Disconnect the CRT neck-pin connector, anode lead, yoke connector, degaussing coil connector, and 1-pin DAG spring connector (see Figure 3-3).
4. Follow steps 1 through 8 under *Removing the Light and Speaker Board Assembly.*

CAUTION

Be extremely careful when removing the cathode-ray tube mounting bolts because the cathode-ray tube assembly can fall. We recommend that a second person **carefully** hold the cathode-ray-tube neck while the mounting bolts are being removed.

5. Use a ¼-inch combination wrench to remove the bolts and washers from the front of the display mounting bracket.
6. Carefully lift the CRT assembly from the front of the cabinet.
7. Replace in reverse order.

NOTE

Whenever the cathode-ray tube is replaced, readjust the brightness, purity, and convergence as described in the display manual.

Wiring the Utility Panel Controls

Refer to Figure 3-4 for the proper wire connections when replacing the controls that are mounted on the utility panel.

Figure 3-4 Utility Panel Wire Colors will follow the above text. Be sure the warning is on the illus.

WARNING

Before removing or repairing the utility panel, **turn the game off**. Players may receive an electrical shock if the utility panel is not properly grounded! After servicing any parts on the panel, make sure that the ground wire is firmly attached to the back of the coin counter.

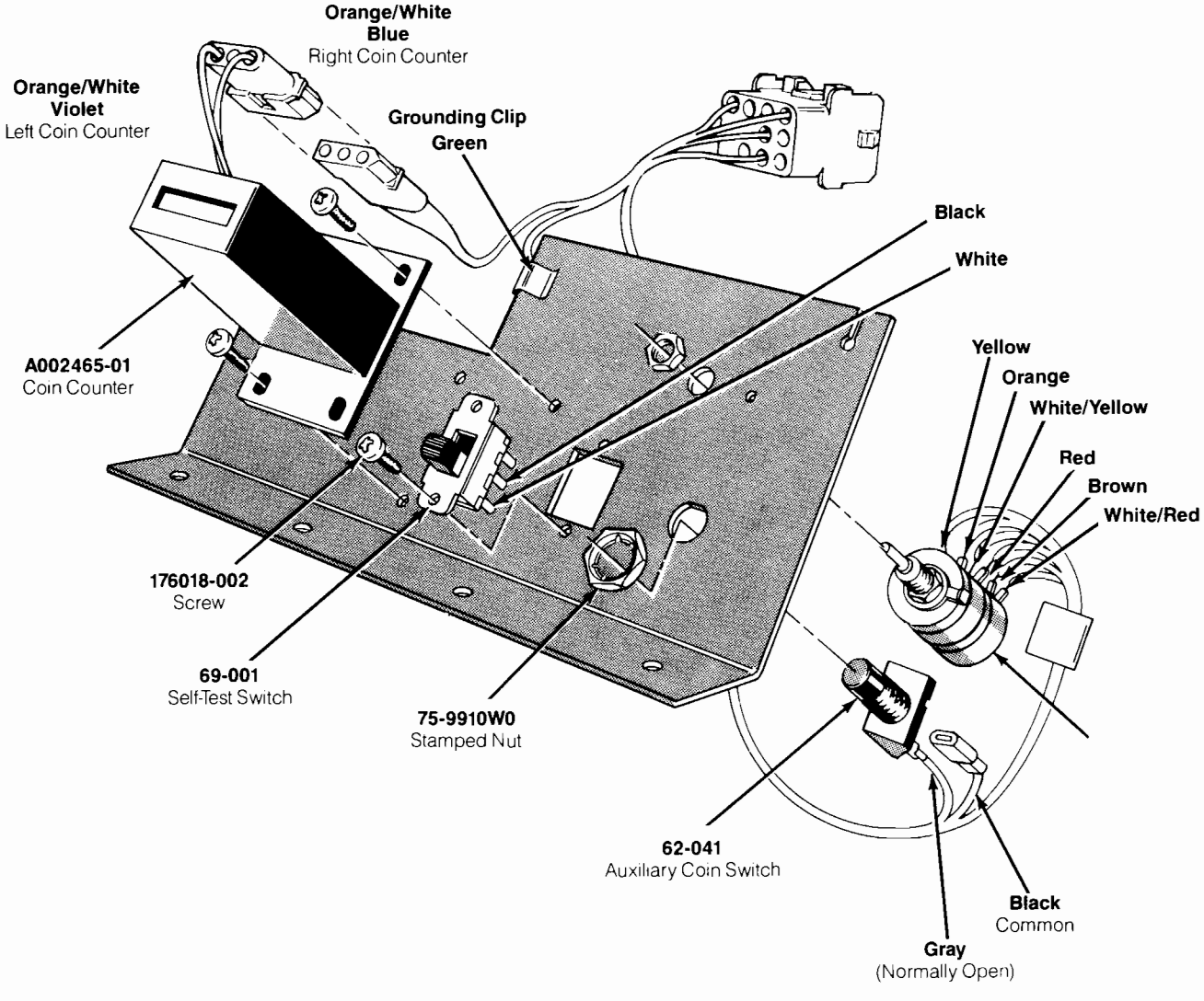

Figure 3-4 Utility Panel Wire Colors

Illustrated Parts Lists

This chapter provides information you need to order parts for your game. Common hardware (screws, nuts, washers, etc.) has been deleted from most of the parts lists. However, a parts list is included for the hardware to mount the printed-circuit boards (PCB) to the cabinet.

The PCB parts lists are arranged in alphabetical order by component. Each component subsection is arranged alphanumerically by reference designator.

Other parts lists are arranged alphanumerically by Atari part number. In these parts lists, all A-prefix numbers come first. Following these are numbers in sequence evaluated up to the hyphen, namely 00- through 99-, then 000598- through approximately 201000-.

When ordering parts, please give the part number, part name, number of this manual, and serial number of your game. This will aid in filling your order rapidly and correctly. We hope the results will be less downtime and more profit from your game.

Atari Customer Service numbers are listed on the inside front cover of this manual.

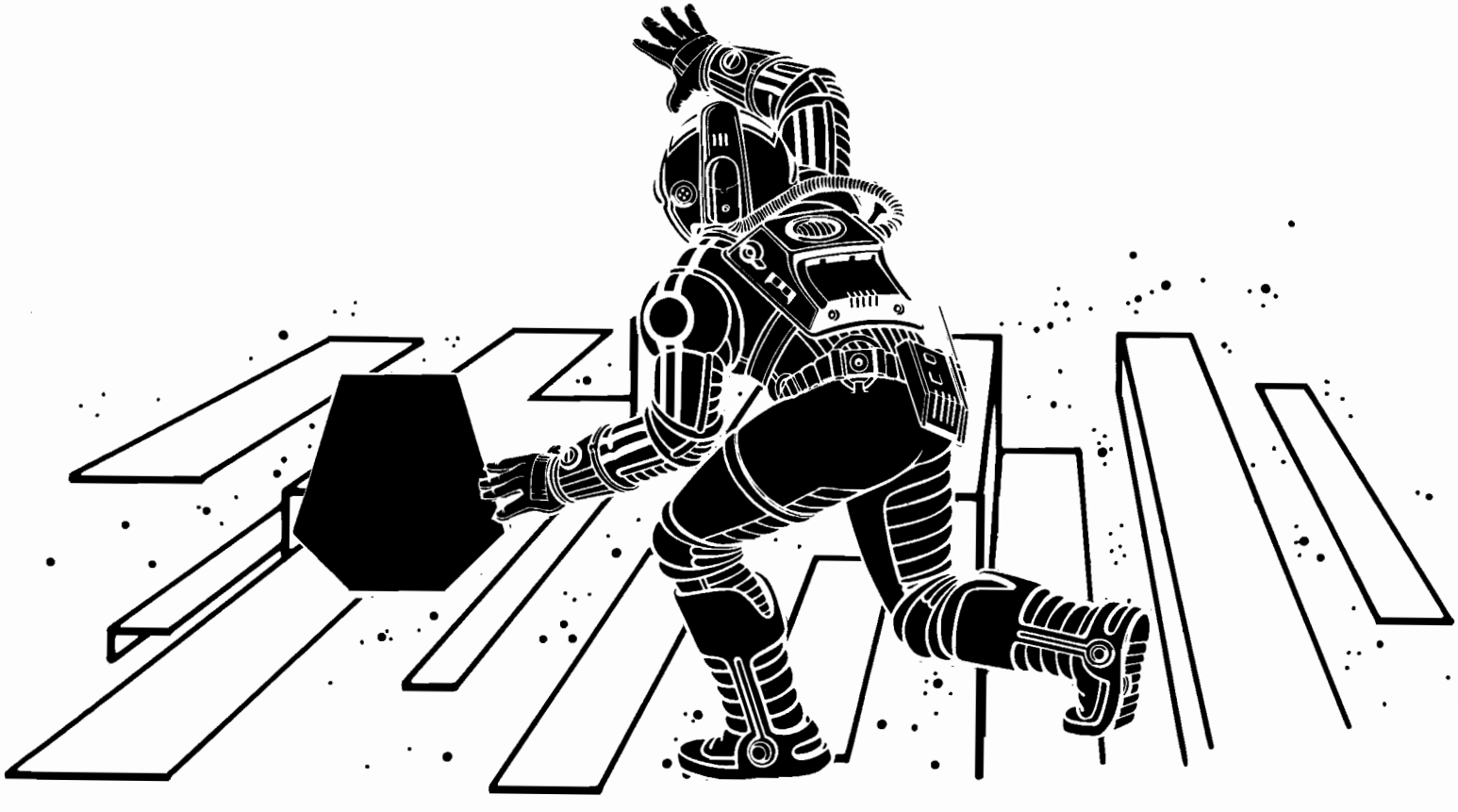

Chapter 4

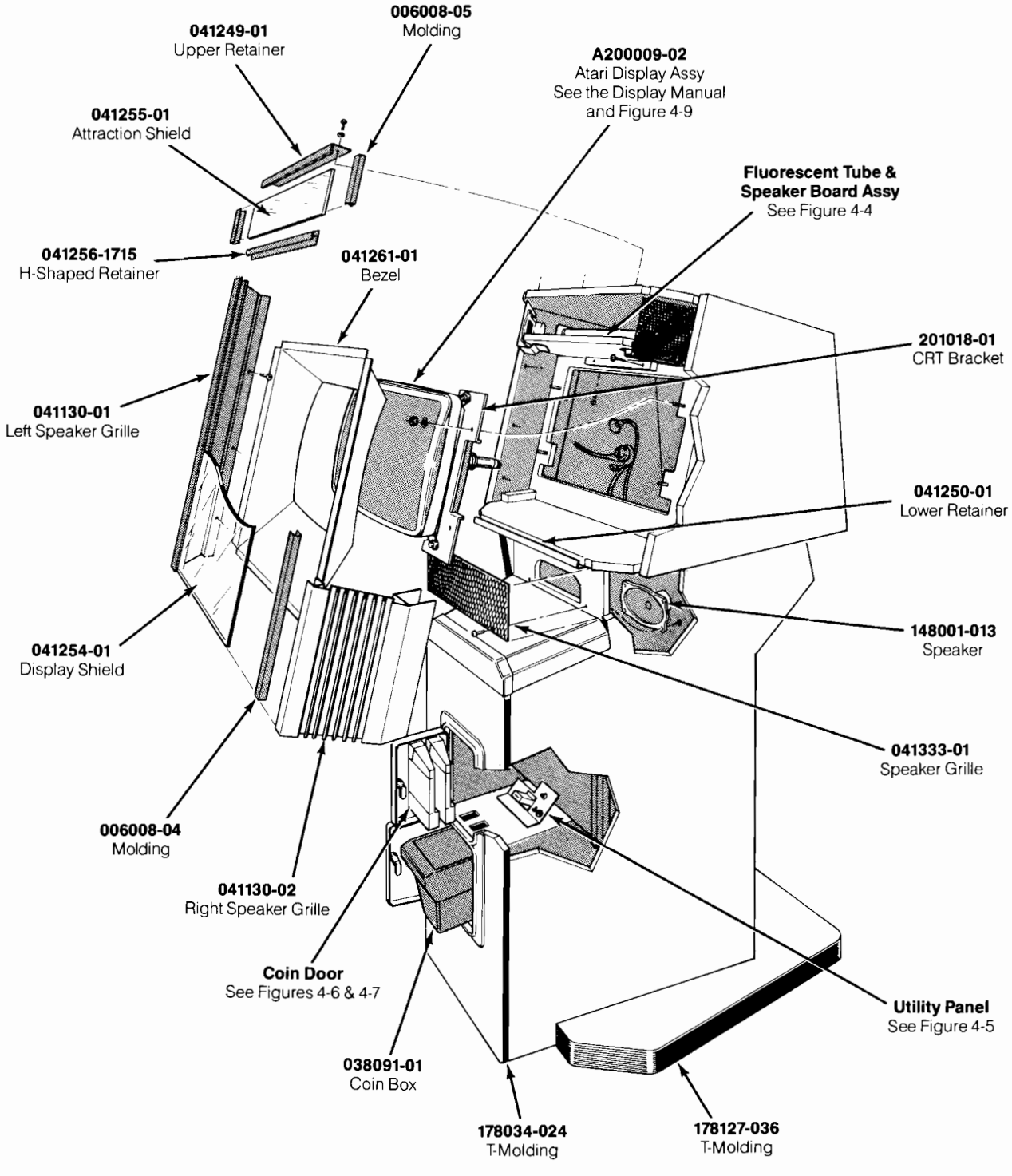

Figure 4-1 Cabinet-Mounted Assemblies
A041300-01 A

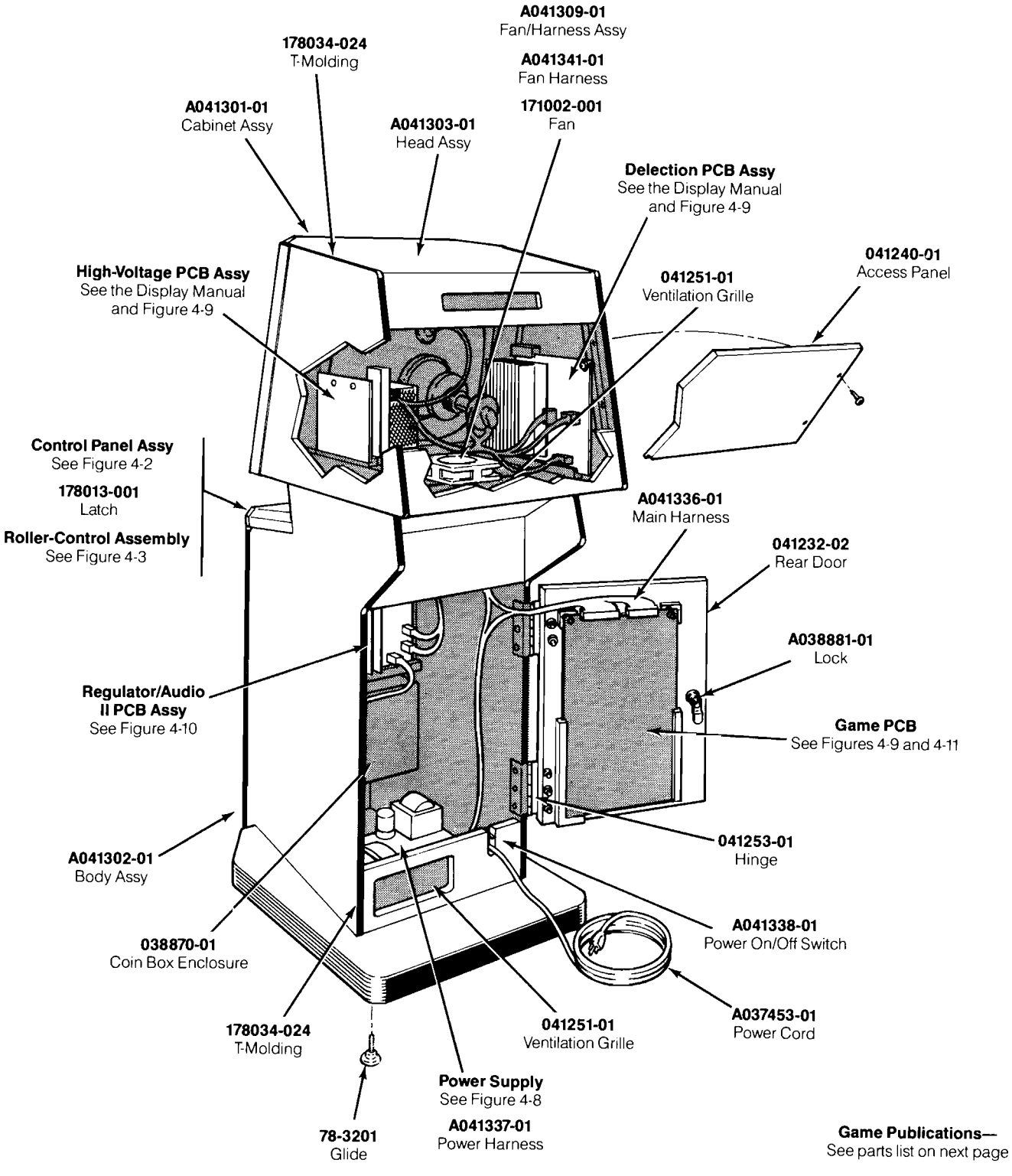

Figure 4-1 Cabinet-Mounted Assemblies, continued
A041300-01 A

Cabinet-Mounted Assemblies
Parts List

Part No.	Description
A037453-01	Strain-Relief Power Cord (U.S. and Canada)
A038881-01	Lock (for rear door panel of pedestal) Acceptable substitute is part no. A038881-03
A041309-01	Fan and Harness Assembly—consists of
A041341-01	Fan Harness
85-22F805	#8-32 × 0.31-Inch Cross-Recessed Type F Screw (not shown)
171002-001	110 V Exhaust Fan
A041336-01	Main Harness
A041337-01	Power Harness
A040699-01	Power On/Off Switch, Harness, and Mounting Plate Assembly
A041301-01	Cabinet Assembly—consists of
A041302-01	Body Assembly
A041303-01	Head Assembly
A200009-02	ATARI 19-Inch Color X-Y Display Kit Assembly—consists of
A201106-01	Cathode-Ray Tube Assembly (not shown)
A201014-01	Deflection PCB Assembly
A201012-01	High-Voltage PCB Assembly
	The following five items are technical information supplements to this game:
SP-252	Major Havoc Schematic Package
ST-252-01	Major Havoc Label with Self-Test Procedure and Option Switch Settings
TM-239	ATARI 19-Inch and 25-Inch Color X-Y Display Manual
TM-252	Major Havoc Operators Manual
TM-248	Star Tech Journal Subscription Card
78-3201	Adjustable Glide
78-6900402	Vinyl Foam Single-Coated Adhesive Tape, ¼-Inch Wide × ⅛-Inch Thick (36 inches required; used along top and bottom edge of display shield)
006008-04	Display Shield Extruded Plastic Molding
006008-05	Attraction Glass Extruded Plastic Molding
009992-01	On/Off Switch Cover (not shown)
034536-02	½-Inch Thick Foam Pad (located between the High-Voltage PCB and the cabinet wall, and between the Regulator/Audio PCB and the cabinet wall—not shown
034536-03	1.12-Inch Thick Foam Pad (located between the Deflection PCB and the cabinet wall—not shown)
037243-01	Base Plate for Power Supply (not shown)
038091-01	Molded Coin Box
038870-01	Coin Box Enclosure
041130-01	Left Speaker Grille
041130-02	Right Speaker Grille
041232-02	Rear Door for Pedestal Assembly (does not include lock or hinges)
041240-01	Rear Access Panel for Head Assembly
041249-01	Attraction Shield Upper Retainer
041250-01	Display Shield Lower Retainer
041251-01	Ventilation Grille (one located in floor of head assembly; one located in lower rear body assembly)
041253-01	Hinge for Rear Door of Pedestal Assembly
041254-01	Display Shield
041255-01	Attraction Shield

(continued on next page)

Cabinet-Mounted Assemblies
Parts List, continued

Part No.	Description
041256-1715	H-Shaped Retainer for Attraction Glass and Display Shield
041261-01	Video Display Bezel
041318-02	Semi-Rigid Attraction Film with Graphics (not shown)
041333-01	Speaker Grille
148001-013	6- × 9-Inch Oval, 4-Ohm, 6-Ounce Shielded High-Fidelity Speaker (located above control panel)
178013-001	Spring-Draw Latch
178034-024	¾-Inch Black Plastic T-Molding (21 inches required on front of pedestal base; 168 inches required on the side panels of the head assembly; 104 inches required on the side panels of the body assembly; 94 inches required on the front panel of the body assembly)
178127-036	2 ¼-Inch Black Plastic T-Molding (68 inches required on the pedestal)
179125-001	Grounding Clip on Main Harness (not shown)
201018-01	19-Inch CRT Bracket

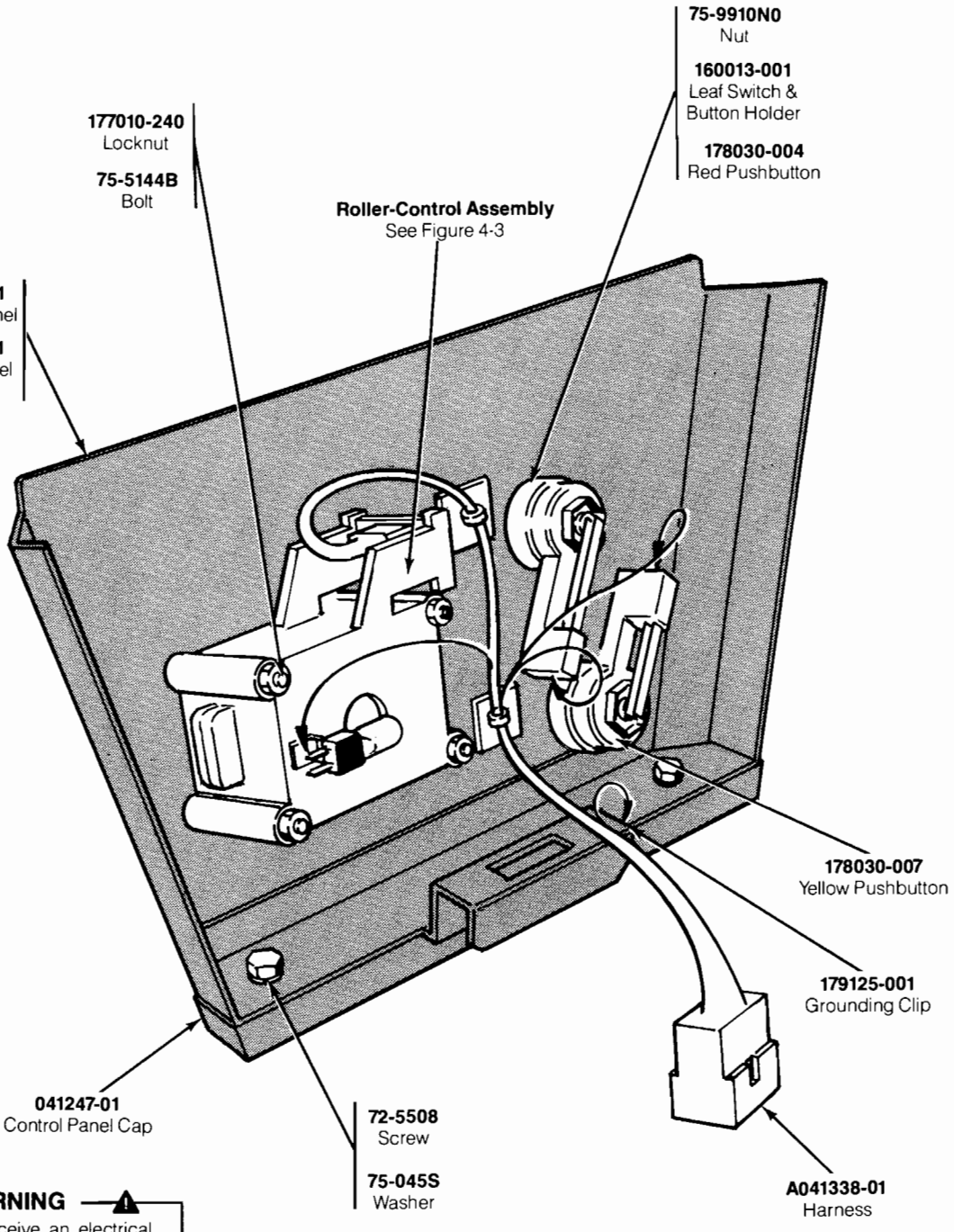

⚠ WARNING ⚠

Players may receive an electrical shock if this control panel is not properly grounded! After servicing any parts on the panel, make sure that the grounding clip is secured to the metal tab on the inside of the control panel.

Figure 4-2 Control Panel Assembly A041310-01 A

Control Panel Assembly
Parts List

Part No.	Description
A039421-02	Roller-Control Assembly
A041311-01	Control Panel with Decal—consists of
041316-01	Control Panel
041317-03	Decal (not shown)
A041338-01	Control Harness
72-5508	¼-Inch-20 × ½-Inch Hex-Head Machine Screw
75-045S	¼-Inch Split-Lock Washer
75-5144B	#10-24 × 2.75-Inch Black Carriage Bolt
75-9910N0	⅝-Inch-11 Stamped Nut
041247-01	Control Panel Cap
160013-001	Leaf Switch with Button Holder
177010-240	#10-24 Hex Locknut
178030-004	Red Pushbutton
178030-007	Yellow Pushbutton
179125-001	Grounding Clip (Acceptable substitute is part no. 179074-010)

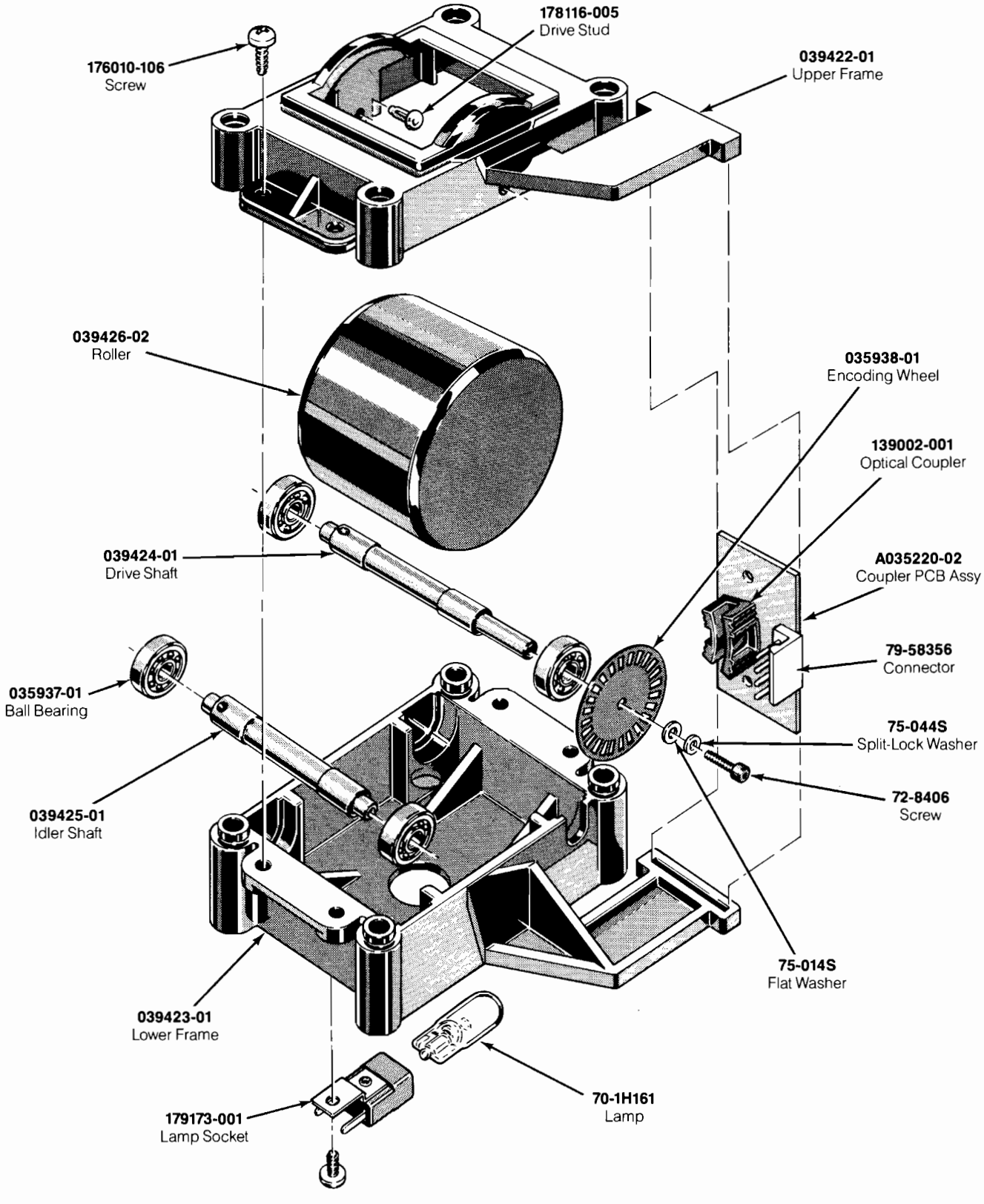

Figure 4-3 Roller-Control Assembly
A039421-02 A

Roller-Control Assembly
Parts List

Part No.	Description
A035220-02	Coupler PCB Assembly—includes
79-58356	4-Position Connector
035221-01	Printed-Circuit Board
110000-151	150 Ω, ±5%, ¼ W Resistor (not shown)
139002-001	Radial Optical Coupler
70-1H161	14 V Wedge-Base Lamp
72-8406	#4-40 × ⅜-Inch Hex Socket-Head Cap Screw
75-014S	#4 Plain Flat Washer
75-044S	#4 Spring Split-Lock Washer
035937-01	Ball Bearing—4 per assembly
035938-01	Etched Encoding Wheel
039422-01	Upper Frame
039423-01	Lower Frame
039424-01	Drive Shaft
039425-01	Idler Shaft
039426-02	Blue Translucent Roller
176010-106	#8 × ⅜-Inch Cross-Recessed Zinc-Plated Steel Pan-Head Screw
178116-005	#6 × 0.31-Inch Drive Stud
179173-001	Wedge-Base Lamp Socket

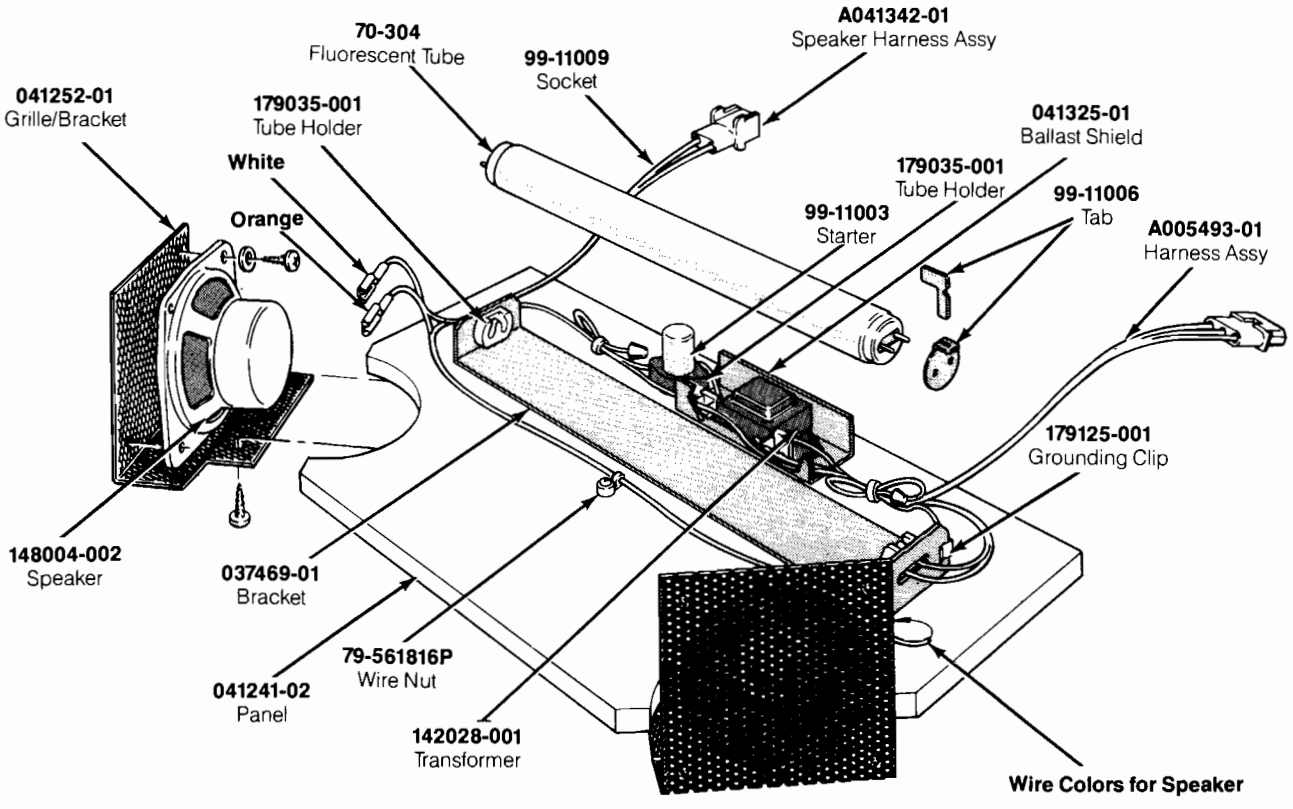

NOTE

To make sure that the fluorescent tube starts, check that the ground wire is firmly attached to both the ballast transformer and steel tube bracket.

Figure 4-4 Fluorescent Light and Speaker Board Assembly A041320-01 A

Parts List

Part No.	Description
A005493-01	Fluorescent Tube Harness Assembly
A037540-01	Ground Wire with Ring Lug (not shown)
A041342-01	Speaker Harness Assembly
70-304	18-Inch, 15 W, Cool White Fluorescent Tube
79-561816P	Spring-Connector Wire Nut for 16- to 18- Gauge Wires
99-11003	Fluorescent Tube Starter
99-11006	Fluorescent Tube Locking Tab (consists of two pieces)
99-11009	Starter Socket
037469-01	Tube Bracket
041241-02	Wood Mounting Panel
041252-01	Speaker Mounting Grille/Bracket
041325-01	Ballast Shield
142028-001	60 Hz, 118 V, Ballast Transformer
148004-002	5-Inch Diameter, 5 W, 4-Ohm Shielded Speaker
179035-001	Tube Holder
179125-001	Grounding Clip (Acceptable substitute is part no. 179074-010)

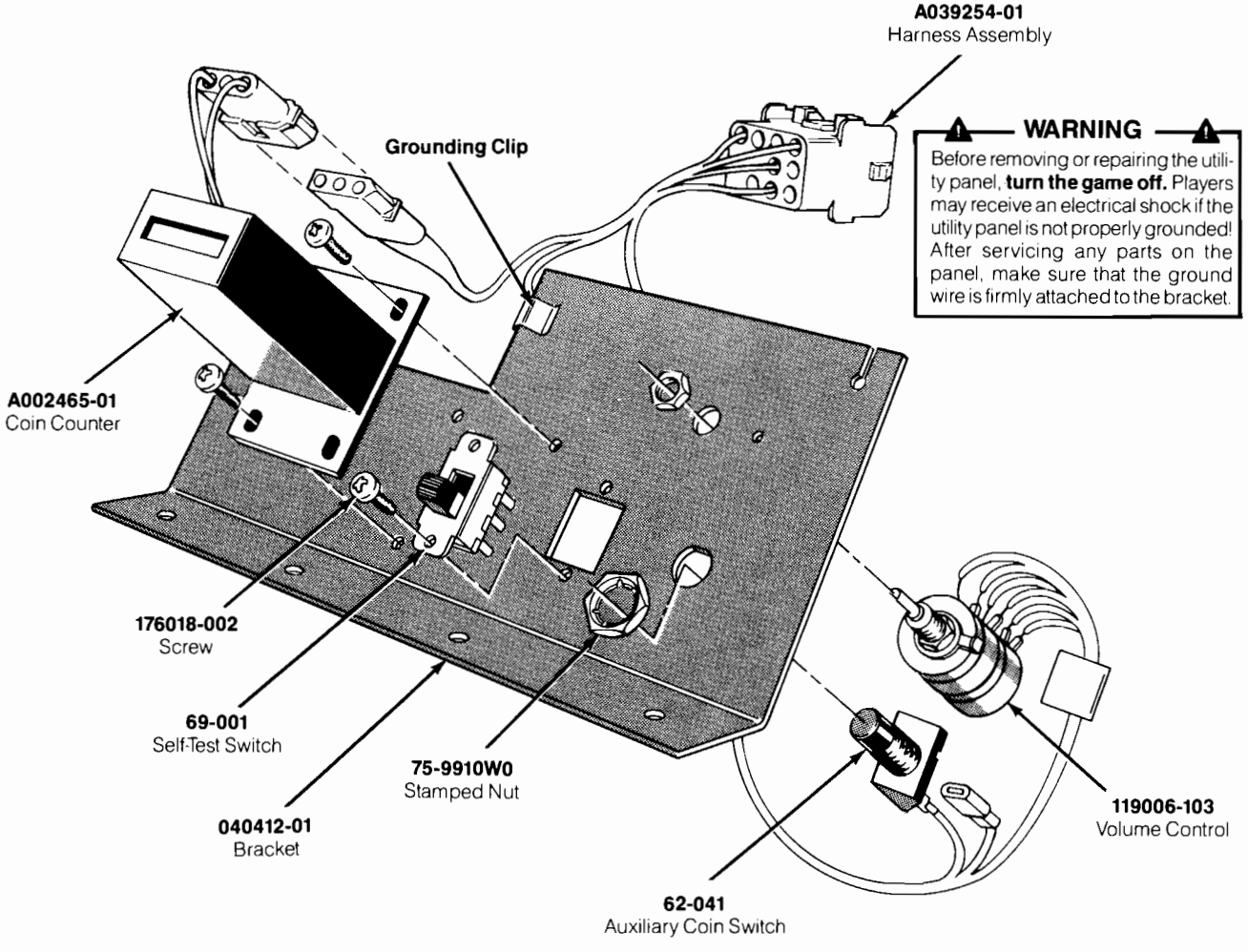

Figure 4-5 Utility Panel Assembly A040413-01 B Parts List

Part No.	Description
A002465-01	Coin Counter
A039254-01	Volume Control Harness Assembly (includes grounding clip)
62-041	SPDT Pushbutton Auxiliary Coin Switch with Black Cap
69-001	DPDT Self-Test Switch
040412-01	Component Panel
75-9910W0	$^{15}/_{32}$-32 Stamped Nut
119006-103	Dual Volume Control
176018-002	#6-32 × ½-Inch Thread Forming Machine Screw

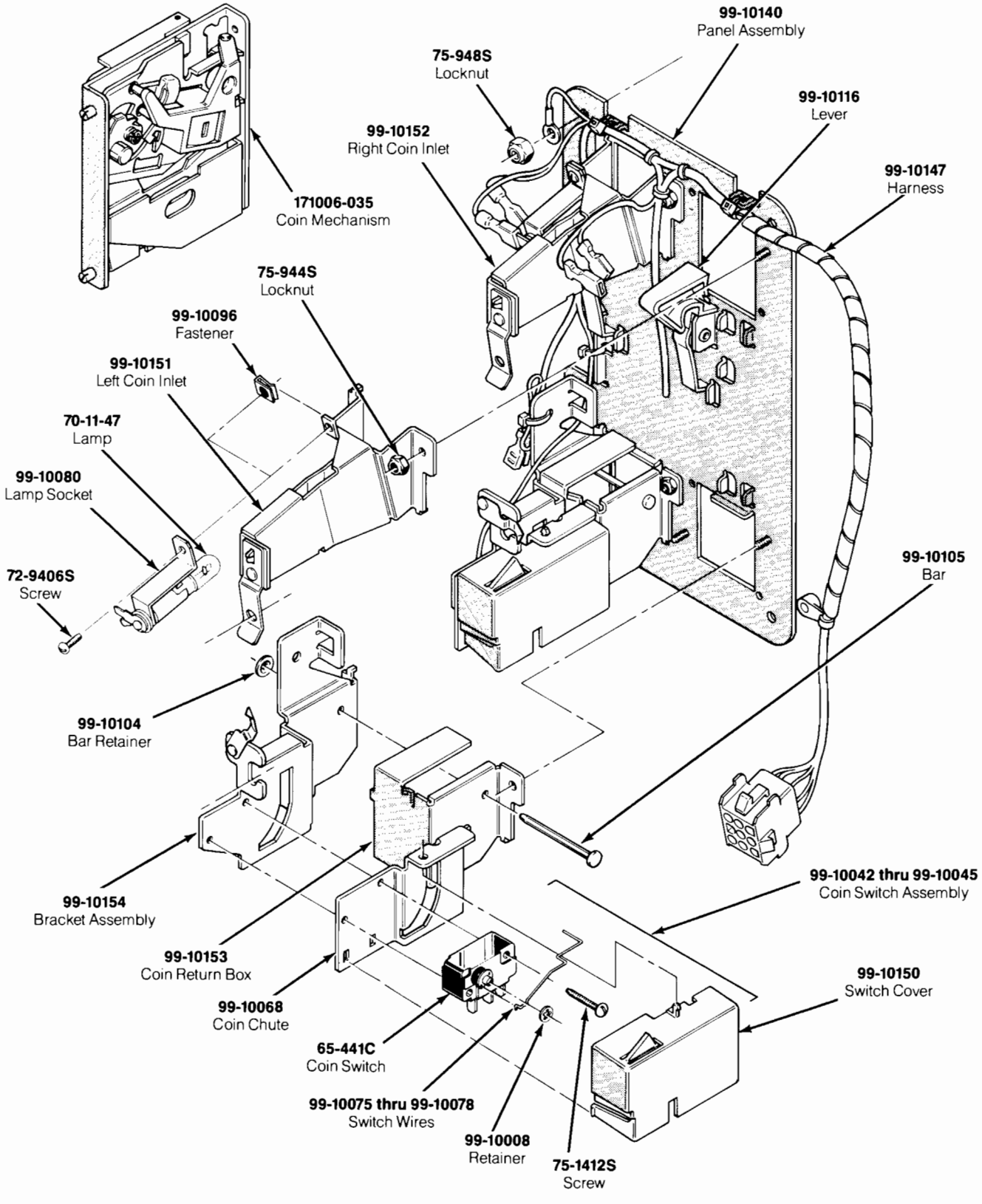

Figure 4-6 Coinco Coin Door Assembly
171027-001 A

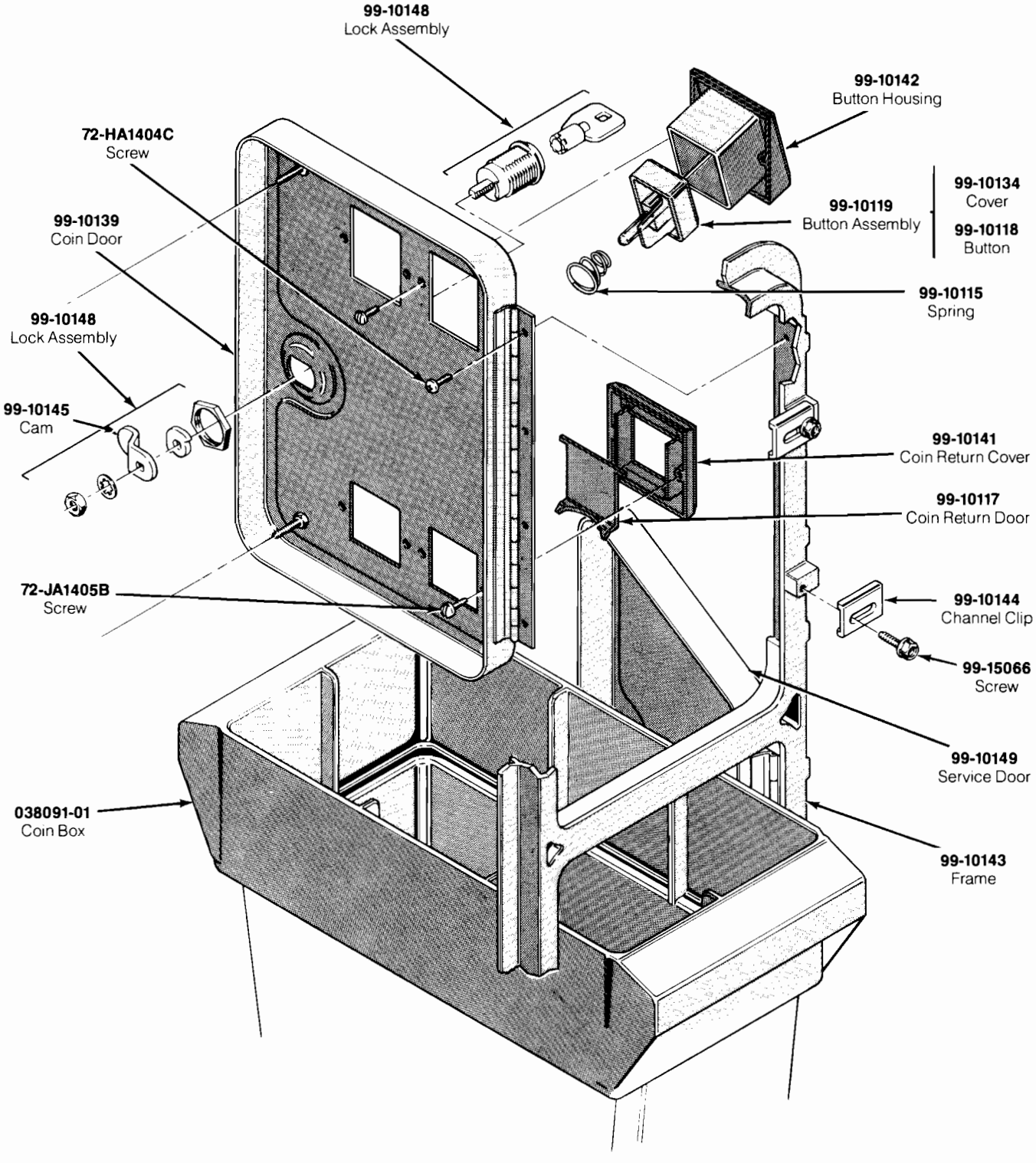

Figure 4-6 Coinco Coin Door Assembly, continued
171027-001 A

Coinco Coin Door Assembly
Parts List

Part No.	Description
171006-035	Metal Coin Mechanism for U.S. $.25
65-441C	Coin Switch
70-11-47	Miniature Bayonet Lamp
72-9406S	#4-40 x ⅜-Inch Truss-Head Screw
72-HA1404C	#4-40 x ¼-Inch Pan-Head Screw
72-JA1405B	#4-40 x .31-Inch Pan-Head Screw
75-1412S	#4-40 x ¾-Inch Pan-Head Screw
75-994S	#4-40 Lock Nut
99-10008	Retainer
99-10042	Coin Switch Assembly for Belgium 5 Fr and U.S. $.25
99-10043	Coin Switch Assembly for German 1 DM, Japanese 100 Yen, Swiss 1 Fr
99-10044	Coin Switch Assembly for German 2 DM, Italian 100 L, U.S. $1.00
99-10045	Coin Switch Assembly for Australian $.20, German 5 DM, British 10 P
99-10068	Coin Return Chute
99-10075	Switch Wire (included in coin switch assembly 99-10043)
99-10076	Switch Wire (included in coin switch assembly 99-10042)
99-10077	Switch Wire (included in coin switch assembly 99-10044)
99-10078	Switch Wire (included in coin switch assembly 99-10045)
99-10080	Lamp Socket
99-10081	Key Holder
99-10096	Fastener
99-10104	Bar Retainer
99-10105	Bar
99-10115	Spring
99-10116	Plastic Coin Return Lever
99-10117	Steel Coin Return Door
99-10118	Amber Coin Return Button
99-10119	Amber Coin Button for U.S. $.25
99-10134	Coin Button Cover
99-10139	Coin Door
99-10140	Coin Door Inner-Panel Assembly
99-10141	Diecast Coin Return Cover
99-10142	Diecast Button Housing
99-10143	Coin Door Frame
99-10148	Lock Assembly
99-10149	Service Door
99-10150	Switch Cover
99-10151	Left Coin Inlet
99-10152	Right Coin Inlet
99-10153	Coin Return Box
99-10154	Bracket Assembly
99-15066	Screw for Clamp

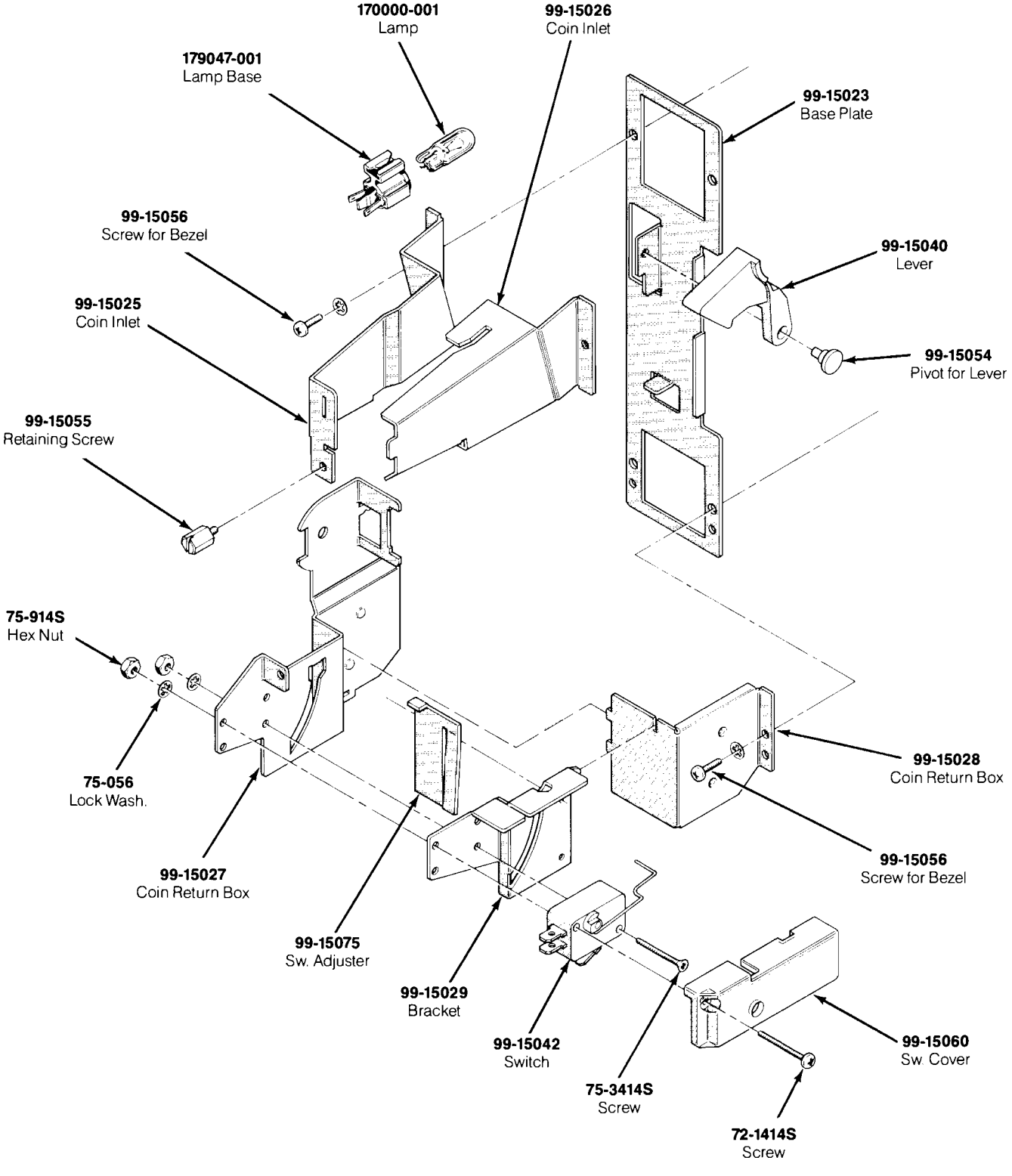

Figure 4-7 Coin Acceptor Coin Door Assembly
171034-xxx A

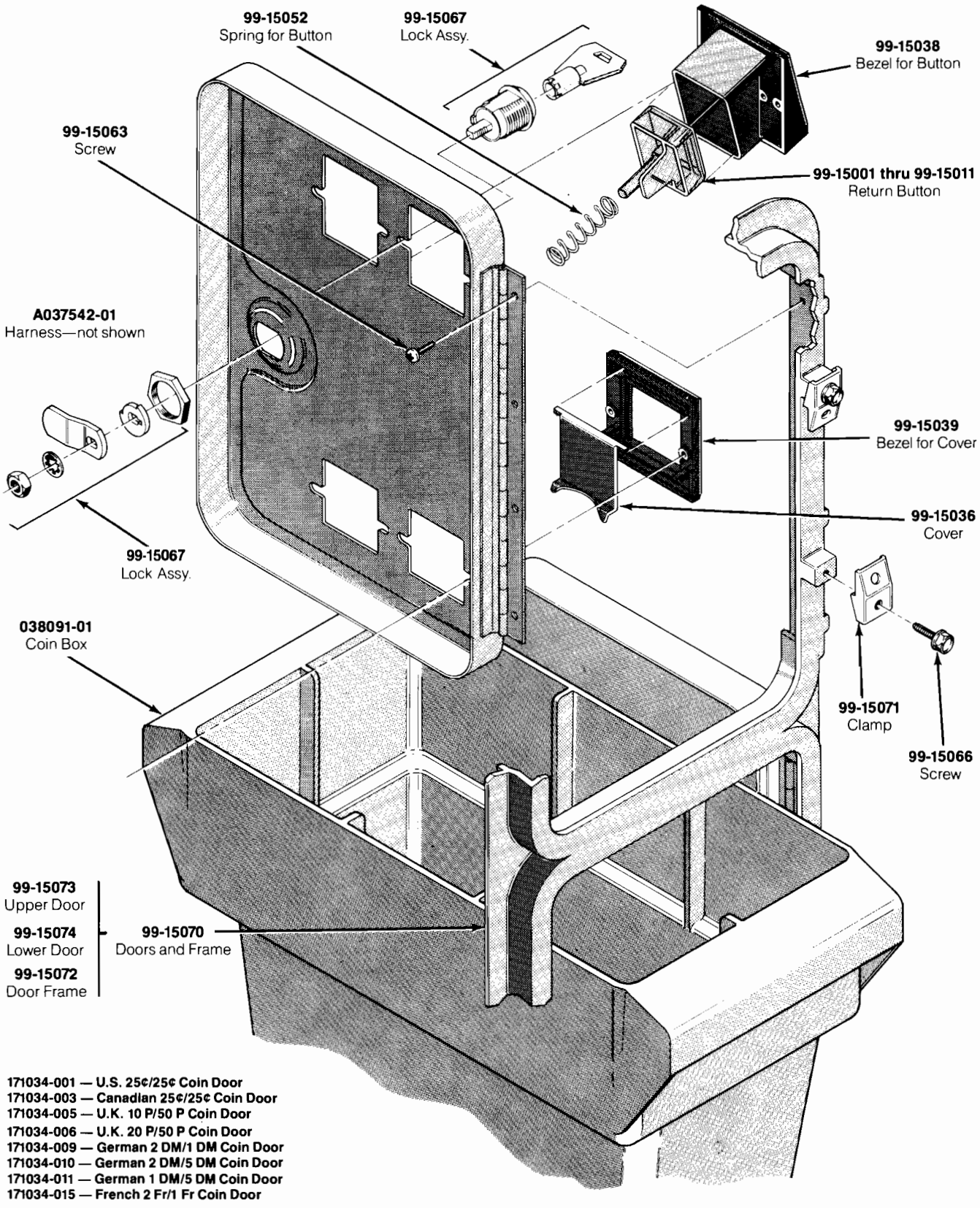

Figure 4-7 Coin Acceptor Coin Door Assembly, continued
171034-xxx A

Coin Acceptor Coin Door Assembly
Parts List

Part No.	Description
A036597-01	Harness Assembly (Ireland-Built cabinet only)
A037542-01	Harness Assembly
72-1414S	#4-40 × ⅜-Inch Cross-Recessed Pan-Head Steel Machine Screw
75-056	#6 Internal-Tooth Zinc-Plated Steel Lock Washer
75-914S	#4-40 Steel Machine Hex Nut
75-3414S	#4-40 × ⅜-Inch 82° Cross-Recessed Flat-Head Steel Machine Screw
99-15001	Coin Return Button with U.S. 25-cent Price Plate
99-15002	Coin Return Button with U.S. $1 Price Plate
99-15003	Coin Return Button with German 1 DM Price Plate
99-15004	Coin Return Button with German 2 DM Price Plate
99-15005	Coin Return Button with German 5 DM Price Plate
99-15006	Coin Return Button with Belgian 5 Fr Price Plate
99-15007	Coin Return Button with French 1 Fr Price Plate
99-15008	Coin Return Button with Japanese 100 Yen Price Plate
99-15009	Coin Return Button with British 10 Pence Price Plate
99-15010	Coin Return Button with Australian 20-cent Price Plate
99-15011	Coin Return Button with Italian 100 Lire Price Plate
99-15025	Left Half of Coin Inlet
99-15026	Right Half of Coin Inlet
99-15027	Side Plate of Coin Return Box
99-15028	Base Plate of Coin Return Box
99-15029	Switch Bracket
99-15036	Metal Coin Return Cover
99-15038	Bezel for Coin Return Button
99-15039	Metal Bezel for Coin Return Button
99-15042	Coin Switch for U.S. 25 cents
99-15052	Spring for Coin Return Button
99-15055	Retaining Screw
99-15056	#4-40 × 5/16-Inch Cross-Recessed Pan-Head Steel Machine Screw
99-15060	Switch Cover
99-15063	Screw for Hinge
99-15066	Screw for Clamp
99-15067	Lock Assembly
99-15070	Doors and Frame
99-15071	Clamp for Frame
99-15072	Door Frame
99-15073	Upper Door
99-15074	Lower Door
99-15075	Switch Adjuster
99-15083	Base Plate—includes:
99-15040	Lever
99-15054	Pivot for Lever
038091-01	Coin Box—not included in assembly (Acceptable substitute is part no. A037491-01)
170000-001	6.3 V Miniature Wedge-Base Incandescent Lamp
171006-035	Metal Coin Mechanism
171050-001	Dual Entry Face Plate
179047-001	Lamp Base

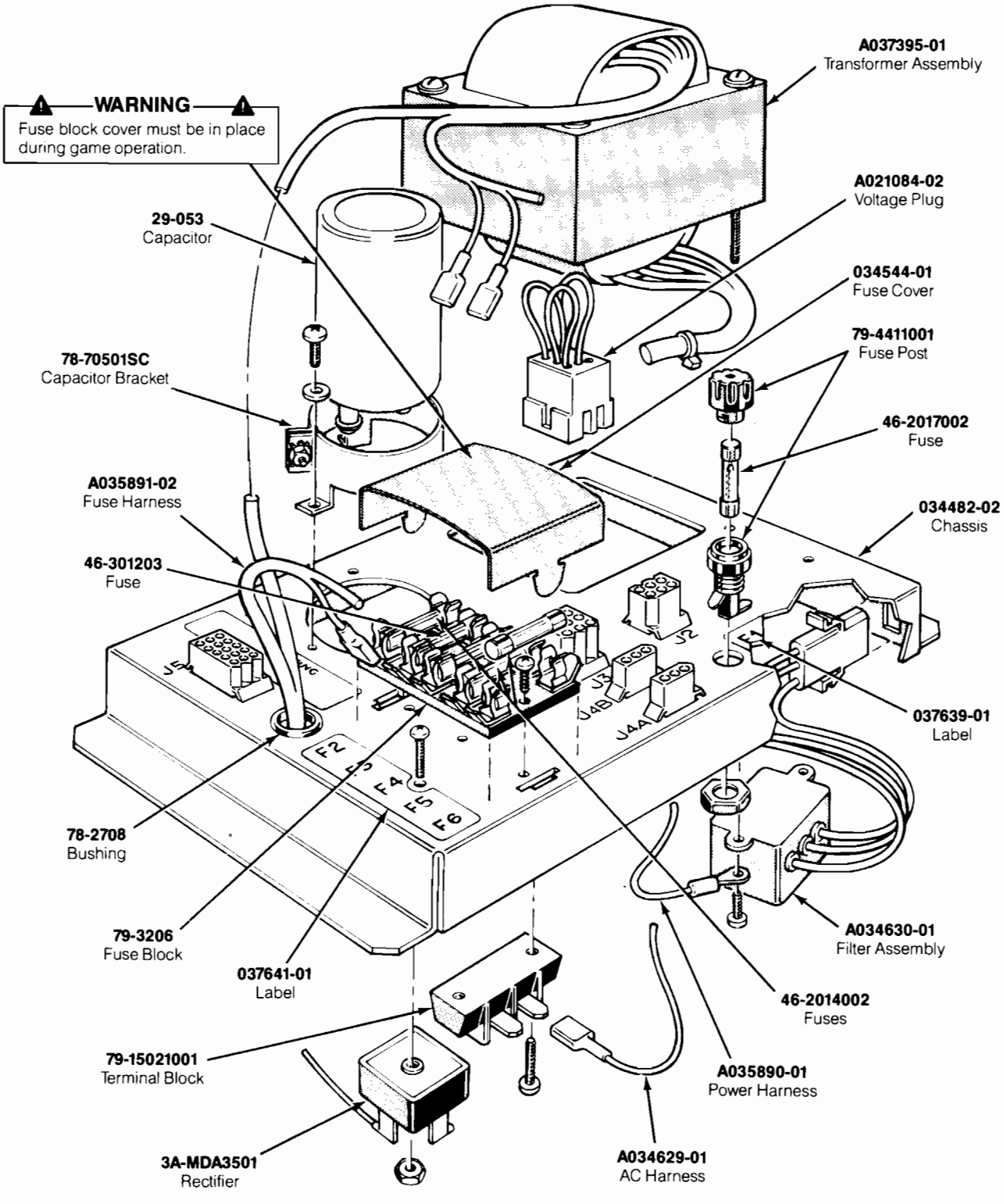

Figure 4-8 Power Supply Assembly
A037396-04 F

Power Supply Assembly
Parts List

Designator	Description	Part No.
C1	27,000 μF, 15 VDC Electrolytic Capacitor	29-053
C1	2-Inch Diameter Capacitor Mounting Bracket	78-70501SC
CR1	Type-MDA 3501 Bridge Rectifier	3A-MDA3501
F1	Panel-Mounting Non-Indicating 3AG Cartridge-Type Fuse Post	79-4411001
F1	7 A, 250 V, 3AG Slow-Blow Glass Cartridge-Type Fuse	46-2017002
F1	Label for Fuse Value	037639-01
F2	4 A, 250 V, 3AG Slow-Blow Glass Cartridge-Type Fuse (Acceptable substitute is part no. 46-2014001)	46-2014002
F3	20 A, 32 V, 3AG Slow-Blow Glass Cartridge-Type Fuse	46-301203
F4–F6	4 A, 250 V, 3AG Slow-Blow Glass Cartridge-Type Fuse (Acceptable substitute is part no. 46-2014001)	46-2014002
F2–F6	5-Position 3AG Fuse Block with ¼-Inch Quick-Disconnect Terminals	79-3206
F2–F6	Fuse Harness Assembly	A035891-02
F2–F6	Fuse Block Cover	034544-01
F2–F6	Label for Fuse Values	037641-01
F4	2-Circuit Single-Row Terminal Block (located under F4)	79-15021001
FL1	RFI Filter Assembly (designation not marked)	A034630-01
J2	Power Harness Assembly	A035890-01
J3	Voltage Plug for 120 V (105–135 VAC) (yellow wire color)	A021084-02
J4A	AC Harness Assembly	A034629-01
T1	Transformer Assembly (designation covered)	A037395-01
	Nylon Type 6/6 Hole Bushing with ⅜-Inch Inside Diameter × 55/64-Inch Outside Diameter × ¼-Inch Thick	78-2708
	Power Supply Chassis Base	034482-02

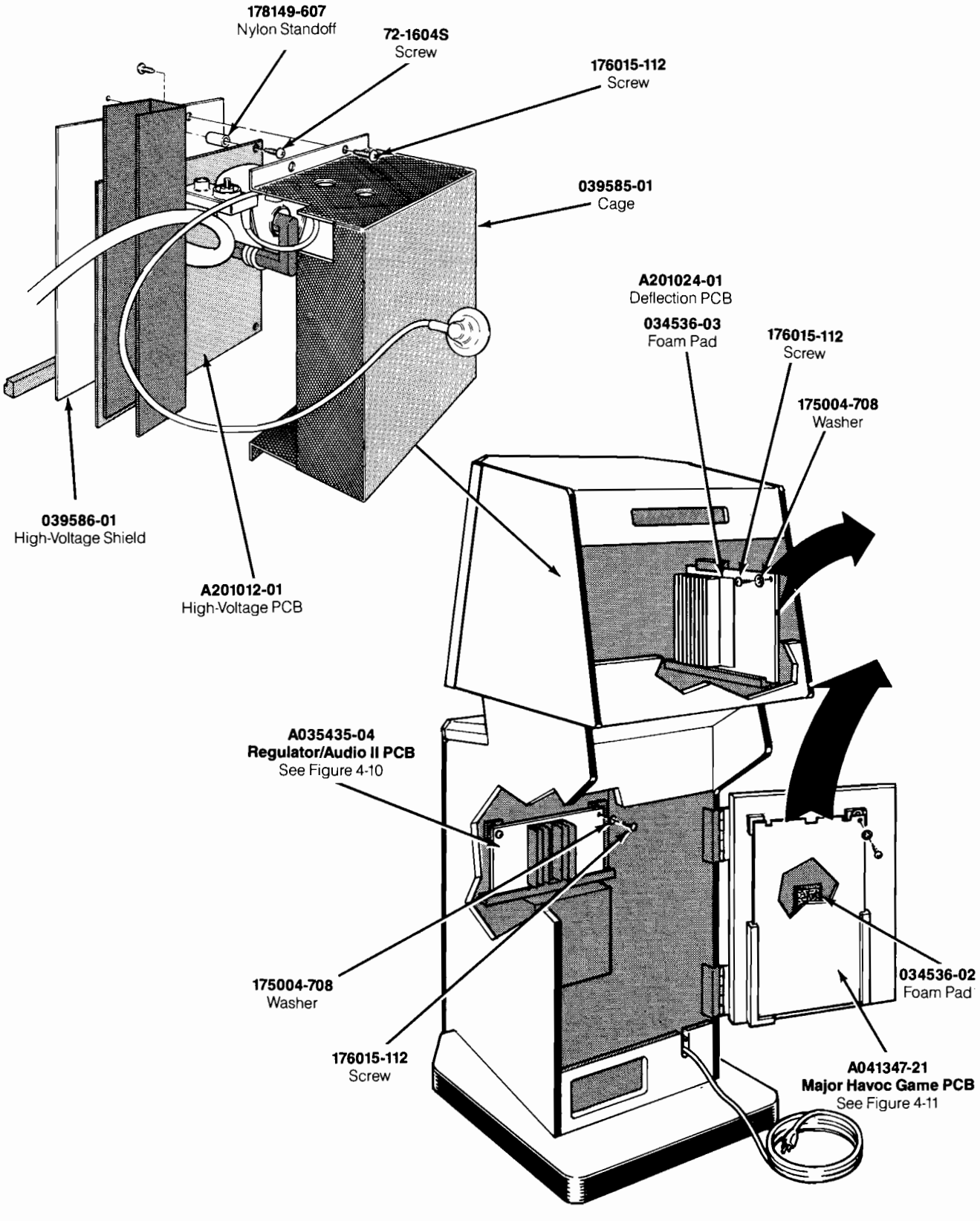

Figure 4-9 PCB Mounting Hardware

PCB Mounting Hardware
Parts List

Part No.	Description
A035435-04	Regulator/Audio II PCB
A201012-01	High-Voltage PCB
A201014-01	Deflection PCB
72-1604S	#6-32 × ¼-Inch Cross-Recessed Pan-Head Screw
034536-02	0.50-Inch Thick Foam Pad (located between Game PCB and cabinet wall; between Regulator/Audio PCB and cabinet wall)
034536-03	1.12-Inch Thick Foam Pad (located between Deflection PCB and cabinet wall)
039585-01	High-Voltage Cage
039586-01	High-Voltage Shield
175004-708	#8 Flat Fiber Washer
176015-112	#10 × ¾-Inch Cross-Recessed Pan-Head Screw
178149-607	Nylon Standoff

NOTICE TO ALL PERSONS RECEIVING THIS DRAWING CONFIDENTIAL: Reproduction forbidden without the specific written permission of Atari, Inc., Sunnyvale, CA. This drawing is only conditionally issued, and neither receipt nor possession thereof confers or transfers any right in, or license to use, the subject matter of the drawing or any design or technical information shown thereon, nor any right to reproduce this drawing or any part thereof. Except for manufacture by vendors of Atari, Inc., and for manufacture under the corporation's written license, no right to reproduce this drawing is granted or the subject matter thereof unless by written agreement with or written permission from the corporation.

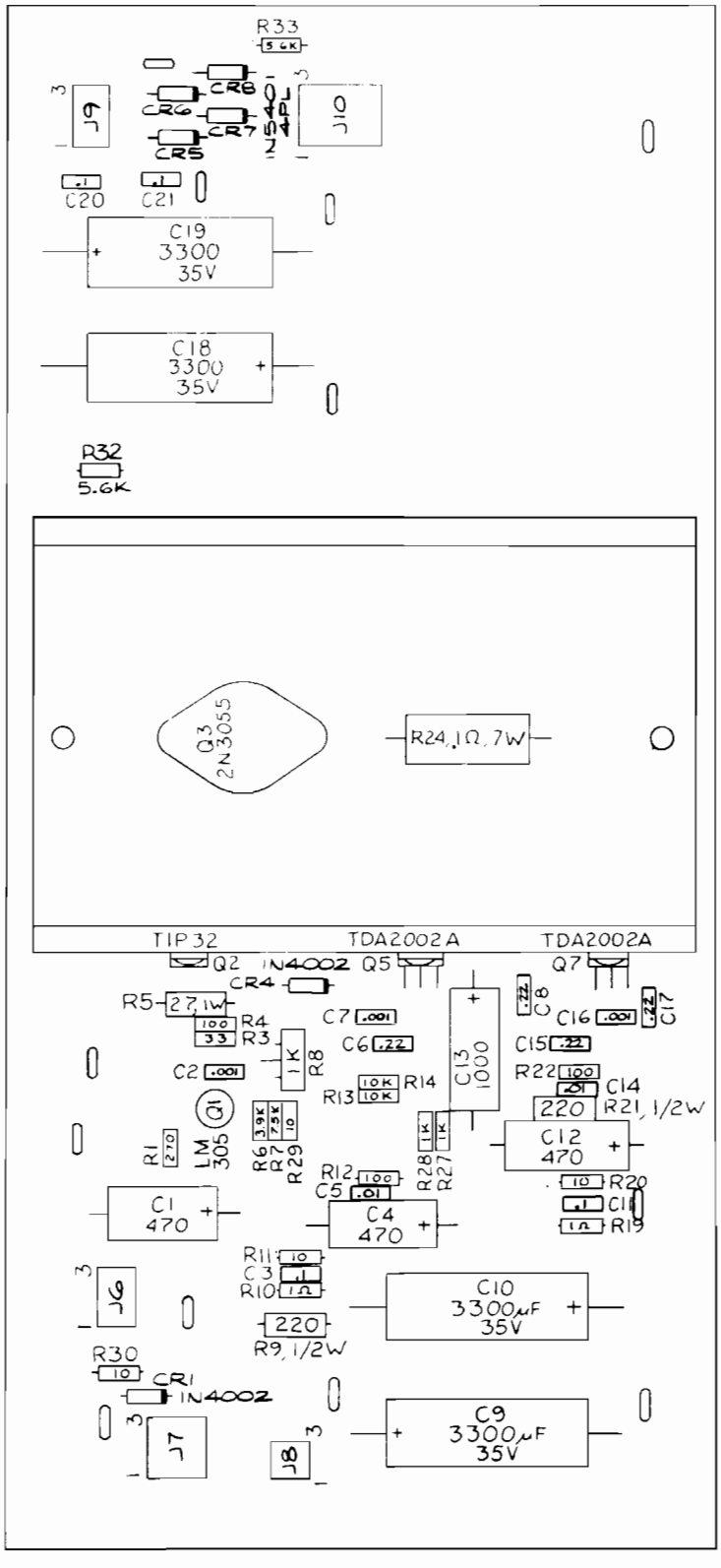

Figure 4-10 Regulator/Audio II PCB Assembly A035435-04 D

Regulator/Audio II PCB Assembly
Parts List

Designator	Description	Part No.
	Capacitors	
C1	470 μF, 25 V, Aluminum Electrolytic Fixed Axial-Lead Capacitor	24-250477
C2	0.001 μF, 50 V, Ceramic-Disc Axial-Lead Capacitor	122002-102
C3	0.1 μF, +80%, -20%, 50 V, Ceramic-Disc Capacitor	122002-104
C4	470 μF, 25 V, Aluminum Electrolytic Fixed Axial-Lead Capacitor	24-250477
C5	0.01 μF, 25 V Minimum, Ceramic-Disc Axial-Lead Capacitor (Acceptable substitute is part no. 122005-103)	100015-103
C6	0.22 μF, 25 V, Ceramic-Disc Axial-Lead Capacitor	122004-224
C7	0.001 μF, 50 V, Ceramic-Disc Axial-Lead Capacitor	122002-102
C8	0.22 μF, 25 V, Ceramic-Disc Axial-Lead Capacitor	122004-224
C9, C10	3300 μF, 35 V, Aluminum Electrolytic Fixed Axial-Lead Capacitor	24-350338
C11	0.1 μF, +80%, -20%, 50 V, Ceramic-Disc Capacitor	122002-104
C12	470 μF, 25 V, Aluminum Electrolytic Fixed Axial-Lead Capacitor	24-250477
C13	1000 μF, 25 V, Aluminum Electrolytic Fixed Axial-Lead Capacitor	24-250108
C14	0.01 μF, 25 V Minimum, Ceramic-Disc Axial-Lead Capacitor (Acceptable substitute is part no. 122005-103)	100015-103
C15	0.22 μF, 25 V, Ceramic-Disc Axial-Lead Capacitor	122004-224
C16	0.001 μF, 50 V, Ceramic-Disc Axial-Lead Capacitor	122002-102
C17	0.22 μF, 25 V, Ceramic-Disc Axial-Lead Capacitor	122004-224
C18, C19	3300 μF, 35 V, Aluminum Electrolytic Fixed Axial-Lead Capacitor	24-350338
C20, C21	0.1 μF, +80%, -20%, 50 V, Ceramic-Disc Capacitor	122002-104
	Diodes	
CR1	Type-1N4002, 1 A, 100 V Silicon Rectifier Diode	31-1N4002
CR4	Type-1N4002, 1 A, 100 V Silicon Rectifier Diode	31-1N4002
CR5–CR8	Type-1N5401, 3 A, 100 V Silicon Rectifier Diode	31-1N5401
	Integrated Circuits	
Q1	Type-LM305, 5 V, Linear Voltage Regulator	37-LM305
Q5	Type-TDA2002A, 8 W, Linear Audio Amplifier Integrated Circuit	137151-002
Q7	Type-TDA2002A, 8 W, Linear Audio Amplifier Integrated Circuit	137151-002
	Resistors	
R1	270 Ω, ±5%, ¼ W Resistor	110000-271
R3	33 Ω, ±5%, ¼ W Resistor	110000-330
R4	100 Ω, ±5%, ¼ W Resistor	110000-101
R5	2.7 Ω, ±5%, 1 W Resistor	110009-027
R6	3.9 kΩ, ±5%, ¼ W Resistor	110000-392
R7	7.5 kΩ, ±5%, ¼ W Resistor	110000-752
R8	1 kΩ Vertical PCB-Mounting Cermet Potentiometer	119002-102
R9	220 Ω, ±5%, ½ W Resistor	110001-221
R10	1 Ω, ±5%, ¼ W Resistor	110000-010
R11	10 Ω, ±5%, ¼ W Resistor	110000-100
R12	100 Ω, ±5%, ¼ W Resistor	110000-101
R13, R14	10 kΩ, ±5%, ¼ W Resistor	110000-103
R19	1 Ω, ±5%, ¼ W Resistor	110000-010
R20	10 Ω, ±5%, ¼ W Resistor	110000-100
R21	220 Ω, ±5%, ½ W Resistor	110001-221
R22	100 Ω, ±5%, ¼ W Resistor	110000-101

(continued on next page)

Regulator/Audio II PCB Assembly
Parts List, continued

Designator	Description	Part No.
R24	0.1 Ω, ±3%, 7 W Wirewound Resistor	19-100P1015
R27, R28	1 kΩ, ±5%, ¼ W Resistor	110000-102
R29, R30	10 Ω, ±5%, ¼ W Resistor	110000-100
R32, R33	5.6 kΩ, ±5%, ¼ W Resistor	110000-562
	Transistors	
Q2	Type-T1P32 PNP Power Transistor	33-T1P32
Q3	Type-2N3055 NPN Silicon Transistor	34-2N3055
	Mechanical Parts	
J6	6-Position Connector Receptacle	79-58306
J7	9-Position Connector Receptacle	79-58308
J8	4-Position Connector Receptacle	79-58354
J9	6-Position Connector Receptacle	79-58306
J10	12-Position Connector Receptacle	79-58346
Q2	#6-32 × ¼-Inch Binder-Head Nylon Screw	75-F60405
Q3	#6-32 Nut/Washer Assembly	75-99516
Q3	Thermally Conductive Silicon Insulator	78-16008
Q5	Thermally Conductive Silicon Insulator	78-16008
Q5, Q7	#6 × ⅜-Inch Cross-Recessed Pan-Head Zinc-Plated Steel Screw	72-6606S
	Heat Sink	034531-01
	Test Point (Acceptable substitute is part no. 179051-001)	179051-002

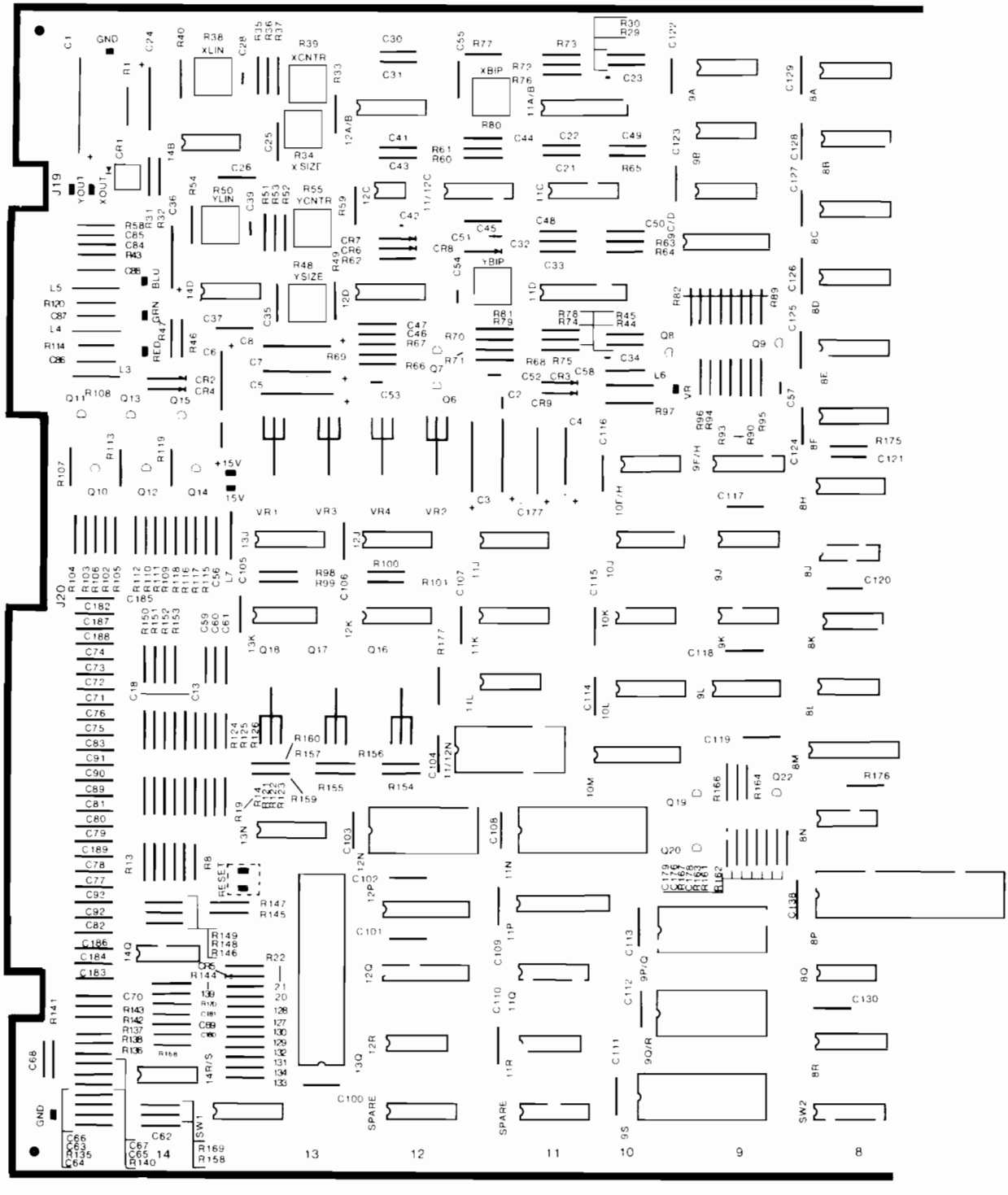

Figure 4-11 Major Havoc PCB Assembly A041347-21 A

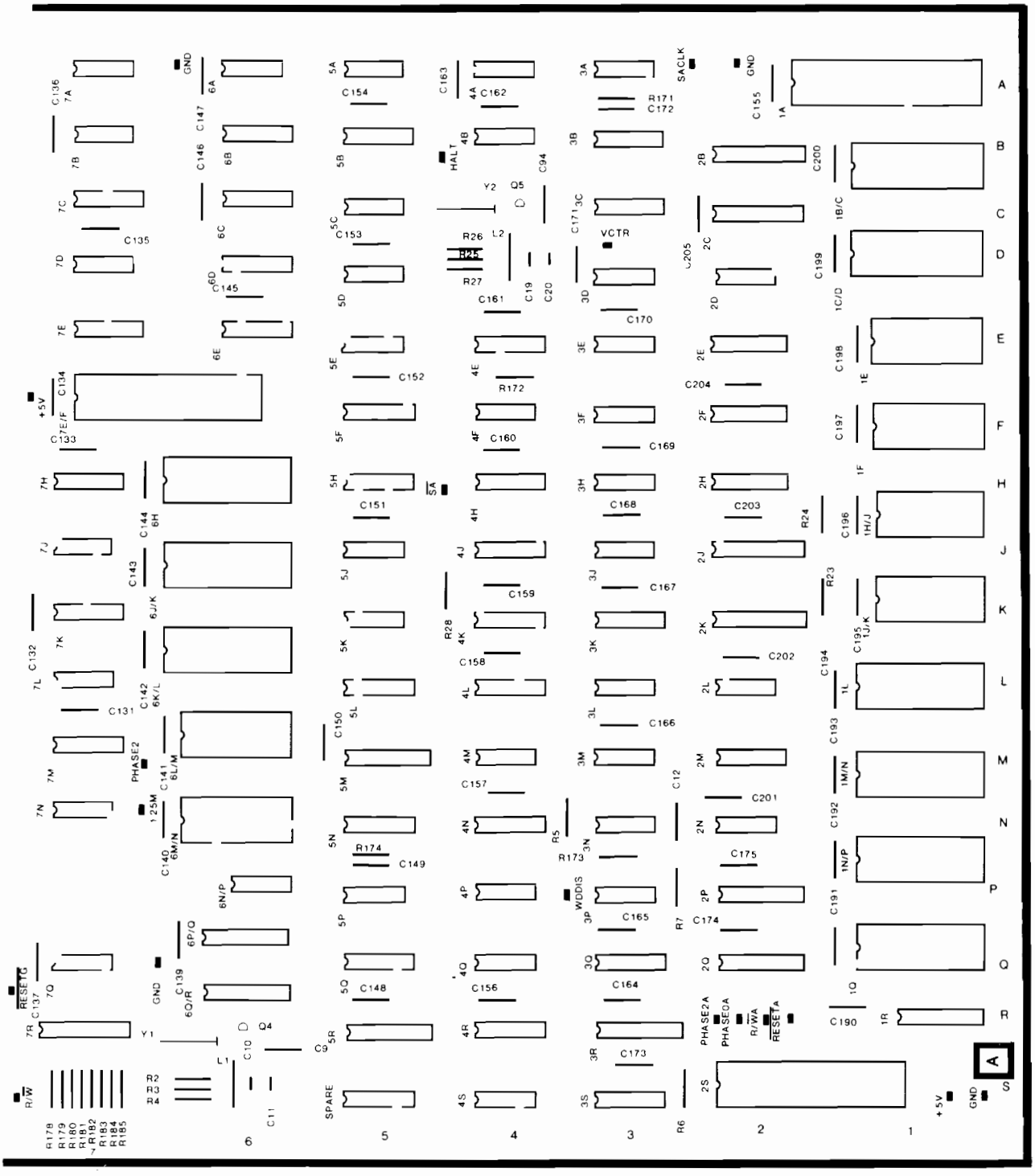

NOTICE TO ALL PERSONS RECEIVING THIS DRAWING CONFIDENTIAL: Reproduction forbidden without the specific written permission of Atari, Inc., Sunnyvale, CA. This drawing is only conditionally issued, and neither receipt nor possession thereof confers or transfers any right in, or license to use, the subject matter of the drawing or any design or technical information shown thereon, nor any right to reproduce this drawing or any part thereof. Except for manufacture by vendors of Atari, Inc., and for manufacture under the corporation's written license, no right is granted to reproduce this drawing or the subject matter thereof, unless by written agreement with or written permission from the corporation.

Major Havoc PCB Assembly
Parts List

Designator	Description	Part No.
	Capacitors	
C1, C2	100 μF, 35 V, Aluminum Electrolytic Axial-Lead Capacitor	24-350107
C3, C5	2.2 μF, 35 V, Tantalum Capacitor	122000-225
C4	1 μF, 50 V, Aluminum Electrolytic Radial-Lead Capacitor	123001-105
C6	100 μF, 35 V, Aluminum Electrolytic Axial-Lead Capacitor	24-350107
C7, C8	1 μF, 50 V, Aluminum Electrolytic Radial-Lead Capacitor	123001-105
C9	0.1 μF, 50 V Ceramic Capacitor	122002-104
C10	100 pF, 100 V Minimum, Dipped, Fixed Mica Capacitor	128002-101
C11	39 pF, 100 V Minimum, Dipped, Fixed Mica Capacitor	128002-390
C12	0.01 μF, +80% -20%, Ceramic Axial-Lead Capacitor	122005-103
C13–C18	0.1 μF, 50 V Ceramic Capacitor	122002-104
C19	100 pF, 100 V Minimum, Dipped, Fixed Mica Capacitor	128002-101
C20	39 pF, 100 V Minimum, Dipped, Fixed Mica Capacitor	128002-390
C21, C22	0.1 μF, 50 V Ceramic Capacitor	122002-104
C23	0.01 μF, 100 V Polyester Radial-Lead Capacitor	21-101103
C24	0.022 μF, ±10%, 50 V Polycarb Axial-Lead Capacitor	122010-223
C25, C26	0.1 μF, 50 V Ceramic Capacitor	122002-104
C28	39 pF, 100 V Minimum, Dipped, Fixed Mica Capacitor	128002-390
C30–C33	0.1 μF, 50 V Ceramic Capacitor	122002-104
C34	0.01 μF, 100 V Polyester Radial-Lead Capacitor	21-101103
C35	0.1 μF, 50 V Ceramic Capacitor	122002-104
C36	0.022 μF, ±10%, 50 V Polycarb Axial-Lead Capacitor	122010-223
C37	0.1 μF, 50 V Ceramic Capacitor	122002-104
C39	39 pF, 100 V Minimum, Dipped, Fixed Mica Capacitor	128002-390
C41	0.1 μF, 50 V Ceramic Capacitor	122002-104
C42	0.001 μF, 100 V Polyester Radial-Lead Capacitor	21-101102
C43–C48	0.1 μF, 50 V Ceramic Capacitor	122002-104
C49	0.01 μF, +80% -20%, Ceramic Axial-Lead Capacitor	122005-103
C50	0.1 μF, 50 V Ceramic Capacitor	122002-104
C51	10 pF, 100 V Minimum, Dipped, Fixed Mica Capacitor	128002-100
C52	39 pF, 100 V Minimum, Dipped, Fixed Mica Capacitor	128002-390
C53–C55	150 pF, 100 V Minimum, Dipped, Fixed Mica Capacitor	128002-151
C56	0.1 μF, 50 V Ceramic Capacitor	122002-104
C57	220 pF, 100 V Minimum, Dipped, Fixed Mica Capacitor	128002-221
C58	0.01 μF, +80% -20%, Ceramic Axial-Lead Capacitor	122005-103
C59–C61	0.1 μF, 50 V Ceramic Capacitor	122002-104
C62, C63	0.22 μF, ±20%, 25 V, Ceramic Axial-Lead Capacitor	122004-224
C64, C65	0.001 μF, 50 V Ceramic Capacitor	122002-102
C66	0.22 μF, ±20%, 25 V, Ceramic Axial-Lead Capacitor	122004-224
C67	0.01 μF, +80% -20%, Ceramic Axial-Lead Capacitor	122005-103
C68–C70	0.001 μF, 50 V Ceramic Capacitor	122002-102
C71–C74	0.01 μF, +80% -20%, Ceramic Axial-Lead Capacitor	122005-103
C75–C81	0.1 μF, 50 V Ceramic Capacitor	122002-104
C82	0.01 μF, +80% -20%, Ceramic Axial-Lead Capacitor	122005-103
C83	0.1 μF, 50 V Ceramic Capacitor	122007-104

(continued on next page)

Major Havoc PCB Assembly
Parts List, continued

Designator	Description	Part No.
C84, C85	0.01 μF, +80% -20%, Ceramic Axial-Lead Capacitor	122005-103
C86–C88	470 μF, 50 V Ceramic Capacitor	120006-471
C89–C91	0.1 μF, 50 V Ceramic Capacitor	122002-104
C92, C93	0.01 μF, +80% -20%, Ceramic Axial-Lead Capacitor	122005-103
C94	0.1 μF, 50 V Ceramic Capacitor	122002-104
C100–C175	0.1 μF, 50 V Ceramic Capacitor	122002-104
C178, C179	0.1 μF, 50 V Ceramic Capacitor	122002-104
C182–C189	0.1 μF, 50 V Ceramic Capacitor	122002-104
C190–C205	0.1 μF, 50 V Ceramic Capacitor	122002-104
	Coils	
L1, L2	100 μH, ±10% Inductor	141002-001
L3–L7	830 mA, 0.29 Ω, ±10%, 1.0 μH Peaking Coil Inductor	141007-001
	Diodes	
CR1	Type-MV5053 Red Light-Emitting Diode	38-MV5053
CR2–CR5	Type-1N100 20 mA, 80 V Diode	31-1N100
CR6, CR7	Type-1N914 10 mA, 100 V Switching Diode	31-1N914
CR8	Type-1N100 20 mA, 80 V Diode	31-1N100
	Integrated Circuits	
1H/J	Static RAM Integrated Circuit (Acceptable substitutes are part numbers 137211-001, -120)	137198-001
1J/K	Static RAM Integrated Circuit (Acceptable substitutes are part numbers 137211-001, -120)	137198-001
1L	Type-27128 EPROM (200 ns) Integrated Circuit	136025-104
1M/N	Type-27128 EPROM (200 ns) Integrated Circuit	136025-103
1N/P	Type-27128 EPROM (200 ns) Integrated Circuit (Acceptable substitute is part number 136025-009)	136025-102
1Q	Type-27128 EPROM (200 ns) Integrated Circuit	136025-101
1R	Type-74LS245 Integrated Circuit	37-74LS245
2D	Type-74LS32 Integrated Circuit	37-74LS32
2L	Type-74LS04 Integrated Circuit	37-74LS04
2M	Type-74LS253 Integrated Circuit	37-74LS253
2N	Type-74LS74 Integrated Circuit	37-74LS74
2P	Type-74LS244 Integrated Circuit	37-74LS244
2Q	Type-74LS244 Integrated Circuit	37-74LS244
2S	Type-6502B Integrated Circuit	90-6012
3A, 4A	Type-74S02 Integrated Circuit	37-74S02
3B	Type-74LS191 Integrated Circuit	37-74LS191
3C	Type-74LS175 Integrated Circuit	37-74LS175
3D	Type-74S04 Integrated Circuit	37-74S04
3E	Type-74S74 Integrated Circuit	37-74S74
3F	Type-74LS74 Integrated Circuit	37-74LS74
3H	Type-74S32 Integrated Circuit	37-74S32
3J	Type-74S10 Integrated Circuit	137236-001
3K	Type-74LS157 Integrated Circuit	37-74LS157
3L	Type-74LS32 Integrated Circuit	37-74LS32

(continued on next page)

Major Havoc PCB Assembly
Parts List, continued

Designator	Description	Part No.
3M	Type-74LS74 Integrated Circuit	37-74LS74
3N	Type-74LS08 Integrated Circuit	37-74LS08
3P	Type-74S74 Integrated Circuit	37-74S74
3Q	Type-74LS163 Integrated Circuit	137274-001
3R	Type-74LS245 Integrated Circuit	37-74LS245
3S	Type-74S08 Integrated Circuit	37-74S08
4B	Type-74S260 Integrated Circuit	37-74S260
4E	Type-74LS163 Integrated Circuit	137274-001
4F	Type-74LS02 Integrated Circuit	37-74LS02
4H	Type-74109 Integrated Circuit	37-74109
4J	Type-74LS163 Integrated Circuit	137274-001
4K	Type-74LS163 Integrated Circuit	137274-001
4L	Type-74LS139 Integrated Circuit	37-74LS139
4M	Type-74LS32 Integrated Circuit	37-74LS32
4N	Type-74LS139 Integrated Circuit	37-74LS139
4P	Type-74LS04 Integrated Circuit	37-74LS04
4Q	Type-74S393 Integrated Circuit	37-74LS393
4R	Type-74LS161 Integrated Circuit	37-74LS161
4S	Type-74S393 Integrated Circuit	37-74LS393
5A	Type-74S74 Integrated Circuit	37-74S74
5B	Type-74LS174 Integrated Circuit	37-74LS174
5C	Type-74LS27 Integrated Circuit	37-74LS27
5D	Type-74LS74 Integrated Circuit	37-74LS74
5E	Type-74LS32 Integrated Circuit	37-74LS32
5F	Type-74LS157 Integrated Circuit	37-74LS157
5H	Type-74LS157 Integrated Circuit	37-74LS157
5J	Type-74LS164 Integrated Circuit	37-74LS164
5K	Type-74LS08 Integrated Circuit	37-74LS08
5L	Type-74LS157 Integrated Circuit	37-74LS157
5M	Type-74LS245 Integrated Circuit	37-74LS245
5N	Type-74LS138 Integrated Circuit	137177-001
5P	Type-74LS00 Integrated Circuit	37-74LS00
5Q	Type-74LS161 Integrated Circuit	37-74LS161
5R	Type-74LS244 Integrated Circuit	37-74LS244
6A	Type-74S86 Integrated Circuit	137002-001
6B	Type-74LS157 Integrated Circuit	37-74LS157
6C	Type-82S129 Integrated Circuit	136002-125
6D	Type-74LS157 Integrated Circuit	37-74LS157
6E	Type-74LS157 Integrated Circuit	37-74LS157
6H	Type-27128 EPROM (300 ns) Integrated Circuit	136025-106
6J/K	Type-27128 EPROM (300 ns) Integrated Circuit	136025-107
6K/L	Type-2764 EPROM Integrated Circuit (Acceptable substitute is part number 136025-010)	136025-105
6L/M	Static RAM Integrated Circuit (Acceptable substitutes are part numbers 137211-001, -120)	137198-001
6M/N	Static RAM Integrated Circuit (Acceptable substitutes are part numbers 137211-001, -120)	137198-001

(continued on next page)

Major Havoc PCB Assembly
Parts List, continued

Designator	Description	Part No.
6N/P	Type-74LS08 Integrated Circuit	37-74LS08
6P/Q	Type-74S374 Integrated Circuit	37-74LS374
6Q/R	Type-74S374 Integrated Circuit	37-74LS374
7A	Type-74LS32 Integrated Circuit	37-74LS32
7B	Type-74S00 Integrated Circuit	37-74S00
7C	Type-74LS138 Integrated Circuit	137177-001
7D	Type-74LS04 Integrated Circuit	37-74LS04
7E	Type-74LS175 Integrated Circuit	37-74LS175
7E/F	Type-74LS279 Integrated Circuit	137179-001
7H	Type-74LS175 Integrated Circuit	37-74LS175
7J	Type-74LS11 Integrated Circuit	137149-001
7K	Type-74LS163 Integrated Circuit	137274-001
7L	Type-74LS20 Integrated Circuit	37-74LS20
7M	Type-74LS163 Integrated Circuit	137274-001
7N	Type-74LS10 Integrated Circuit	37-74LS10
7Q	Type-74LS74 Integrated Circuit	37-74LS74
7R	Type-74LS244 Integrated Circuit	37-74LS244
8A	Type-74LS194 Integrated Circuit	37-74LS194
8B	Type-74LS194 Integrated Circuit	37-74LS194
8C	Type-74LS194 Integrated Circuit	37-74LS194
8D	Type-74LS194 Integrated Circuit	37-74LS194
8E	Type-74LS194 Integrated Circuit	37-74LS194
8F	Type-74LS194 Integrated Circuit	37-74LS194
8H	Type-74LS157 Integrated Circuit	37-74LS157
8J	Type-74LS02 Integrated Circuit	37-74LS02
8K	Type-74LS00 Integrated Circuit	37-74LS00
8L	Type-74LS00 Integrated Circuit	37-74LS00
8M	Type-74LS273 Integrated Circuit	37-74LS273
8N	Type-74LS04 Integrated Circuit	37-74LS04
8P	Type-6502A Integrated Circuit	90-6013
8Q	Type-74LS32 Integrated Circuit	37-74LS32
8R	Type-74LS139 Integrated Circuit	37-74LS139
9A	Type-74LS86 Integrated Circuit	37-74LS86
9B	Type-74LS86 Integrated Circuit	37-74LS86
9C	Type-74LS86 Integrated Circuit	37-74LS86
9C/D	Type-74LS273 Integrated Circuit	37-74LS273
9F/H	Type-74LS175 Integrated Circuit	37-74LS175
9J	Type-74LS04 Integrated Circuit	37-74LS04
9K	Type-LM319 Integrated Circuit	37-LM319
9L	Type-74CO4 Integrated Circuit	137309-001
9P/Q	Static RAM Integrated Circuit (Acceptable substitutes are part numbers 137211-001, -120)	137198-001
9Q/R	Type-2804 EPROM Integrated Circuit (Acceptable substitute is part number 137329-300)	137329-450
9S	Type-27128 EPROM (300 ns) Integrated Circuit	136025-108
10F/H	Type-74LS20 Integrated Circuit	37-74LS20

(continued on next page)

Major Havoc PCB Assembly
Parts List, continued

Designator	Description	Part No.
10J	Type-74LS174 Integrated Circuit	37-74LS174
10K	Type-74LS74 Integrated Circuit	37-74LS74
10L	Type-74LS174 Integrated Circuit	37-74LS174
10M	Type-74LS244 Integrated Circuit	37-74LS244
11/12C	Type-74LS174 Integrated Circuit	37-74LS174
11/12N	Type-74198 Integrated Circuit	137350-001
11A/B	Integrated Circuit	137158-002
11C	Integrated Circuit	137159-001
11D	Integrated Circuit	137158-002
11J	Type-74LS153 Integrated Circuit	37-74LS153
11K	Type-74LS153 Integrated Circuit	37-74LS153
11L	Type-74LS30 Integrated Circuit	37-74LS30
11Q	Type-74LS139 Integrated Circuit	37-74LS139
11R, 12R	Type-74LS74 Integrated Circuit	37-74LS74
12A/B	Integrated Circuit	137352-001
12C	Type-TLO82 Integrated Circuit	37-TL082CP
12D	Integrated Circuit	137352-001
12J	Type-82S25 Static RAM Integrated Circuit	90-7005
12K	Type-82S25 Static RAM Integrated Circuit	90-7005
12N	Trackball Interface (LETA) Integrated Circuit	137304-1001
12P	Type-74LS245 Integrated Circuit	37-74LS245
12Q	Type-74LS245 Integrated Circuit	37-74LS245
13J	Type-74LS174 Integrated Circuit	37-74LSI74
13K	Type-7407 Integrated Circuit	37-7407
13N	Type-74LS257 Integrated Circuit	37-74LS257
13Q	Custom Integrated Circuit	137324-1121
14B	Type-TLO84 Integrated Circuit	37-347
14D	Type-TLO84 Integrated Circuit	37-347
14Q	Type-LM324 Integrated Circuit	37-LM324
14R/S	Type-LM324 Integrated Circuit	37-LM324
VR1	Type-7815 Integrated Circuit	37-7815
VR2	Type-7915 Integrated Circuit	37-7915
VR3	Type-7805 Integrated Circuit	37-7805
	Resistors	
R1	150 Ω, ±5%, ¼ W Resistor	110000-151
R2, R3	10 kΩ, ±5%, ¼ W Resistor	110000-103
R4	220 Ω, ±5%, ¼ W Resistor	110000-221
R5	10 kΩ, ±5%, ¼ W Resistor	110000-103
R6, R7	1 kΩ, ±5%, ¼ W Resistor	110000-102
R8–R13	470 Ω, ±5%, ¼ W Resistor	110000-471
R14–R19	1 kΩ, ±5%, ¼ W Resistor	110000-102
R20	5.6 kΩ, ±5%, ¼ W Resistor	110000-562
R21	10 kΩ, ±5%, ¼ W Resistor	110000-103
R22–R24	1 kΩ, ±5%, ¼ W Resistor	110000-102
R25, R26	10 kΩ, ±5%, ¼ W Resistor	110000-103
R27	220 Ω, ±5%, ¼ W Resistor	110000-221

(continued on next page)

Major Havoc PCB Assembly
Parts List, continued

Designator	Description	Part No.
R28	1 kΩ, ±5%, ¼ W Resistor	110000-102
R29, R30	820 Ω, ±5%, ¼ W Resistor	110000-821
R31, R32	7.5 kΩ, ±1%, ⅛ W Resistor	110003-752
R33	10 kΩ, ±5%, ¼ W Resistor	110000-103
R34	10 kΩ Horizontal Trimming Potentiometer	119002-103
R35	10 kΩ, ±5%, ¼ W Resistor	110000-103
R36	2.7 kΩ, ±5%, ¼ W Resistor	110000-272
R37	150 kΩ, ±5%, ¼ W Resistor	110000-154
R38	2 kΩ Horizontal Trimming Potentiometer	119002-202
R39	10 kΩ Horizontal Trimming Potentiometer	119002-103
R40	2.5 mA, 8 V Varistor	110004-001
R43	100 Ω, ±5%, ¼ W Resistor	110000-101
R44, R45	820 Ω, ±5%, ¼ W Resistor	110000-821
R46, R47	7.5 kΩ, ±1%, ⅛ W Resistor	110003-752
R48	10 kΩ Horizontal Trimming Potentiometer	119002-103
R49	10 kΩ, ±5%, ¼ W Resistor	110000-103
R50	2 kΩ Horizontal Trimming Potentiometer	119002-202
R51	10 kΩ, ±5%, ¼ W Resistor	110000-103
R52	150 kΩ, ±5%, ¼ W Resistor	110000-154
R53	2.7 kΩ, ±5%, ¼ W Resistor	110000-272
R54	2.5 mA, 8 V Varistor	110004-001
R55	10 kΩ Horizontal Trimming Potentiometer	119002-103
R58	100 Ω, ±5%, ¼ W Resistor	110000-101
R59	2.2 kΩ, ±5%, ¼ W Resistor	110000-222
R60	470 kΩ, ±5%, ¼ W Resistor	110000-474
R61	1 kΩ, ±5%, ¼ W Resistor	110000-102
R62	2.2 kΩ, ±5%, ¼ W Resistor	110000-222
R63, R64	7.5 kΩ, ±1%, ⅛ W Resistor	110003-752
R65	3.9 kΩ, ±5%, ¼ W Resistor	110000-392
R66	15 kΩ, ±5%, ¼ W Resistor	110000-153
R67	1 kΩ, ±5%, ¼ W Resistor	110000-102
R68	10 kΩ, ±5%, ¼ W Resistor	110000-103
R69	560 Ω, ±5%, ¼ W Resistor	110000-561
R70–R72	7.5 kΩ, ±1%, ⅛ W Resistor	110003-752
R73	6.19 kΩ, ±5%, ¼ W Resistor	110000-622
R74	7.5 kΩ, ±1%, ⅛ W Resistor	110003-752
R75	6.19 kΩ, ±5%, ¼ W Resistor	110000-622
R76	100 Ω, ±5%, ¼ W Resistor	110000-101
R77	1.30 kΩ, ±1%, ⅛ W Resistor	110003-132
R78	100 Ω, ±5%, ¼ W Resistor	110000-101
R79	1.30 kΩ, ±1%, ⅛ W Resistor	110003-132
R80, R81	200 Ω Horizontal Trimming Potentiometer	119002-201
R82–R89	100 kΩ, ±5%, ¼ W Resistor	110000-104
R90	1.2 kΩ, ±5%, ¼ W Resistor	110000-122

(continued on next page)

Major Havoc PCB Assembly
Parts List, continued

Designator	Description	Part No.
R91	2.2 kΩ, ±5%, ¼ W Resistor	110000-222
R92	4.7 kΩ, ±5%, ¼ W Resistor	110000-472
R93	10 kΩ, ±5%, ¼ W Resistor	110000-103
R95	2.2 kΩ, ±5%, ¼ W Resistor	110000-222
R96	22 kΩ, ±5%, ¼ W Resistor	110000-223
R97	68 Ω, ±5%, ¼ W Resistor	110000-680
R98–R102	1 kΩ, ±5%, ¼ W Resistor	110000-102
R103	5.6 kΩ, ±5%, ¼ W Resistor	110000-562
R104, R105	1 kΩ, ±5%, ¼ W Resistor	110000-102
R106	10 kΩ, ±5%, ¼ W Resistor	110000-103
R107, R108	100 Ω, ±5%, ¼ W Resistor	110000-101
R109	1 kΩ, ±5%, ¼ W Resistor	110000-102
R110	5.6 kΩ, ±5%, ¼ W Resistor	110000-562
R111	10 kΩ, ±5%, ¼ W Resistor	110000-103
R112	1 kΩ, ±5%, ¼ W Resistor	110000-102
R113, R114	100 Ω, ±5%, ¼ W Resistor	110000-101
R115	1 kΩ, ±5%, ¼ W Resistor	110000-102
R116	5.6 kΩ, ±5%, ¼ W Resistor	110000-562
R117	10 kΩ, ±5%, ¼ W Resistor	110000-103
R118	1 kΩ, ±5%, ¼ W Resistor	110000-102
R119, R120	100 Ω, ±5%, ¼ W Resistor	110000-101
R121–R123	470 Ω, ±5%, ¼ W Resistor	110000-471
R124–R126	1 kΩ, ±5%, ¼ W Resistor	110000-102
R127–R134	10 kΩ, ±5%, ¼ W Resistor	110000-103
R135	1 kΩ, ±5%, ¼ W Resistor	110000-102
R136	39 kΩ, ±5%, ¼ W Resistor	110000-393
R137	18 kΩ, ±5%, ¼ W Resistor	110000-184
R138	39 kΩ, ±5%, ¼ W Resistor	110000-393
R139	10 kΩ, ±5%, ¼ W Resistor	110000-103
R140	1 kΩ, ±5%, ¼ W Resistor	110000-102
R141	39 kΩ, ±5%, ¼ W Resistor	110000-393
R142	18 kΩ, ±5%, ¼ W Resistor	110000-184
R143	39 kΩ, ±5%, ¼ W Resistor	110000-393
R144, R145	22 kΩ, ±5%, ¼ W Resistor	110000-223
R146, R147	10 kΩ, ±5%, ¼ W Resistor	110000-103
R148, R149	2.2 kΩ, ±5%, ¼ W Resistor	110000-222
R150–R153	3.3 kΩ, ±5%, ¼ W Resistor	110000-332
R154–R157	1 kΩ, ±5%, ¼ W Resistor	110000-102
R158	100 kΩ, ±5%, ¼ W Resistor	110000-104
R159, R160	1 kΩ, ±5%, ¼ W Resistor	110000-102
R171–R177	1 kΩ, ±5%, ¼ W Resistor	110000-102
R178–R185	10 kΩ, ±5%, ¼ W Resistor	110000-103
	Sockets	
1A	24 Contact, Medium-Insertion-Force IC Socket	79-42C24
1F	40 Contact, Medium-Insertion-Force IC Socket	79-42C40

(continued on next page)

Major Havoc PCB Assembly
Parts List, continued

Designator	Description	Part No.
1H/J	40 Contact, Medium-Insertion-Force IC Socket	79-42C40
1J/K	40 Contact, Medium-Insertion-Force IC Socket	79-42C40
1L	28 Contact, Medium-Insertion-Force IC Socket	79-42C28
1M/N	28 Contact, Medium-Insertion-Force IC Socket	79-42C28
1N/P	28 Contact, Medium-Insertion-Force IC Socket	79-42C28
1Q	28 Contact, Medium-Insertion-Force IC Socket	79-42C28
2S	24 Contact, Medium-Insertion-Force IC Socket	79-42C24
6H	28 Contact, Medium-Insertion-Force IC Socket	79-42C28
6J/K	28 Contact, Medium-Insertion-Force IC Socket	79-42C28
6K/L	28 Contact, Medium-Insertion-Force IC Socket	79-42C28
6L/M	40 Contact, Medium-Insertion-Force IC Socket	79-42C40
6M/N	40 Contact, Medium-Insertion-Force IC Socket	79-42C40
7E/F	24 Contact, Medium-Insertion-Force IC Socket	79-42C24
8P	24 Contact, Medium-Insertion-Force IC Socket	79-42C24
9P/Q	40 Contact, Medium-Insertion-Force IC Socket	79-42C40
9Q/R	40 Contact, Medium-Insertion-Force IC Socket	79-42C40
9S	28 Contact, Medium-Insertion-Force IC Socket	79-42C28
12N	40 Contact, Medium-Insertion-Force IC Socket	79-42C40
13Q	24 Contact, Medium-Insertion-Force IC Socket	79-42C24
	Switches	
SW1, SW2	8-Toggle DIP Switch Integrated Circuit	66-1I8PIT
	Transistors	
Q4–Q6	Type-2N3904 Transistor	34-2N3904
Q7, Q8	Type-2N3906 Transistor	34-2N3906
Q9	Type-2N3904 Transistor	34-2N3904
Q10	Type-2N3906 Transistor	34-2N3906
Q11	Type-2N3904 Transistor	34-2N3904
Q12	Type-2N3906 Transistor	34-2N3906
Q13	Type-2N3904 Transistor	34-2N3904
Q14	Type-2N3906 Transistor	34-2N3906
Q15	Type-2N3904 Transistor	34-2N3904
Q16–Q18	Type-2N6044 Transistor	34-2N6044
	Miscellaneous	
Y1	10-MHz Crystal	90-123
Y2	12.096-MHz Crystal	I44000-001
	Test Point (Acceptable substitute is part number 020670-001)	179051-002
	Nylon Snap-In Fastener	81-4302

YOUR COMMENTS, PLEASE!

Your comments will assist Atari in improving our publications. The comments are an important part of preparing for revisions of game manuals. Please write in the space below. No postage stamp is necessary if mailed in the U.S.A.

If you have any technical questions about certain ATARI games products, or are requesting additional publications, we will immediately forward your note to the appropriate person.

Page: Comments:

Fill in if you wish a reply:

Name _____

Firm _____ ☐ Distributor

Address _____ ☐ Operator

City _____ State _____ Zip _____ ☐ Other _____

Area Code _____ Phone _____

First Fold

No postage necessary if mailed in the United States

BUSINESS REPLY MAIL

FIRST CLASS PERMIT NO. 173 SUNNYVALE, CA

POSTAGE WILL BE PAID BY ADDRESSEE

Atari Inc.
Attn: Field Service/Coin-Op Division
P.O. Box 906
Sunnyvale, California 95035

Second Fold

From: _____

Warranty

Seller warrants that its printed-circuit boards and parts thereon are free from defects in material and workmanship under normal use and service for a period of ninety (90) days from date of shipment. Seller warrants that its video displays (in games supplied with displays) are free from defects in material and workmanship under normal use and service for a period of thirty (30) days from date of shipment. None of the Seller's other products or parts thereof are warranted.

If the products described in this manual fail to conform to this warranty, Sellers' sole liability shall be, at its option, to repair, replace, or credit Buyer's account for such products which are returned to Seller during said warranty period, provided:

(a) Seller is promptly notified in writing upon discovery by Buyer that said products are defective;

(b) Such products are returned prepaid to Sellers' plant; and

(c) Seller's examination of said products discloses to Seller's satisfaction that such alleged defects existed and were not caused by accident, misuse, neglect, alteration, improper repair, installation or improper testing.

In no event shall Seller be liable for loss of profits, loss of use, incidental or consequential damages.

Except for any express warranty set forth in a written contract between Seller and Buyer which contract supersedes the terms of this order, this warranty is expressed in lieu of all other warranties expressed or implied, including the implied warranties of merchantability and fitness for a particular purpose, and of all other obligations or liabilities on the Seller's part, and it neither assumes nor authorizes any other person to assume for the Seller any other liabilities in connection with the sale of products under this order.

The use of any non-Atari parts may void your warranty, according to the terms of the warranty. The use of any non-Atari parts may also adversely affect the safety of your game and cause injury to yourself and others. Be very cautious in using non-Atari-supplied components with our games, in order to insure your safety.

Atari distributors are independent, being privately owned and operated. In their judgment they may sell parts or accessories other than Atari parts or accessories. Atari cannot be responsible for the quality, suitability or safety of any non-Atari part or any modification including labor which is performed by such distributor.

This document is and contains confidential trade secret information of Atari, Inc.

This document is loaned under confidential custody for the sole purpose of operation, maintenance or repair of Atari equipment and may not be used by or disclosed to any person for any other purpose whatever, and remains the property of Atari, Inc.

Neither it nor the information it contains may be reproduced, used, or disclosed to persons not having a need to know consistent with the purpose of the loan, without written consent of Atari, Inc.


ATARI
ATARI, INC.
790 SYCAMORE DRIVE
P.O. BOX 906
MILPITAS, CALIFORNIA 95035
408/942-3100 • TELEX 35-7488