
ASTEROIDS
ATARI

Destroy rocks and saucer for points.

Avoid being destroyed by the rocks or saucer fire.

An extra ship is given for each 10,000 points scored.

Hyperspace can be used in emergencies but there is a chance of explosion on reentry.

In a two player game each player alternates until his supply of ships is used up.



20 POINTS



50 POINTS



100 POINTS



200 POINTS



1000 POINTS

Destroy rocks and saucer for points.

Avoid being destroyed by the rocks or saucer fire.

An extra ship is given for each 10,000 points scored.

Hyperspace can be used in emergencies but there is a chance of explosion on reentry.

In a two player game each player alternates until his supply of ships is used up.



20 POINTS



50 POINTS



100 POINTS



200 POINTS



1000 POINTS

STRATEGY:

- Destroy rocks and saucer for points
- Avoid being destroyed by the rocks or saucer fire
- Hyperspace can be used in emergencies but there is a chance of explosion on reentry
- An extra ship is given for each 10,000 points scored

In a two player game each player alternates until his supply of ships is exhausted



20 POINTS



50 POINTS



100 POINTS



200 POINTS



1000 POINTS

TM-143
3rd printing

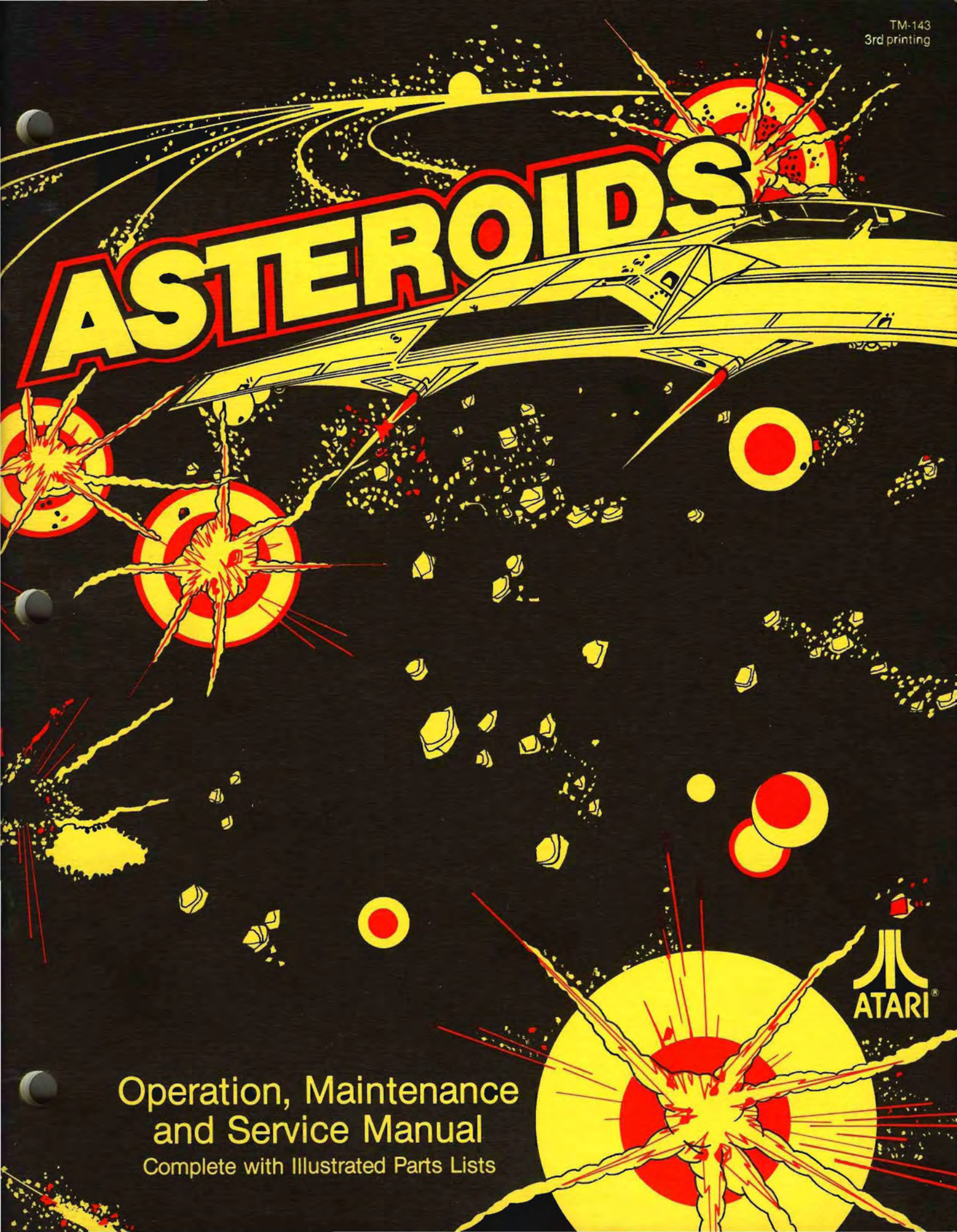

Operation, Maintenance and Service Manual

Complete with Illustrated Parts Lists

GAME SERIAL NUMBER LOCATION

Your game's serial number is located on the outside rear of the game. The same number is also stamped on the chassis of the TV monitor, Game PCB and Regulator/Audio PCB. Please mention this number whenever calling your distributor for service.

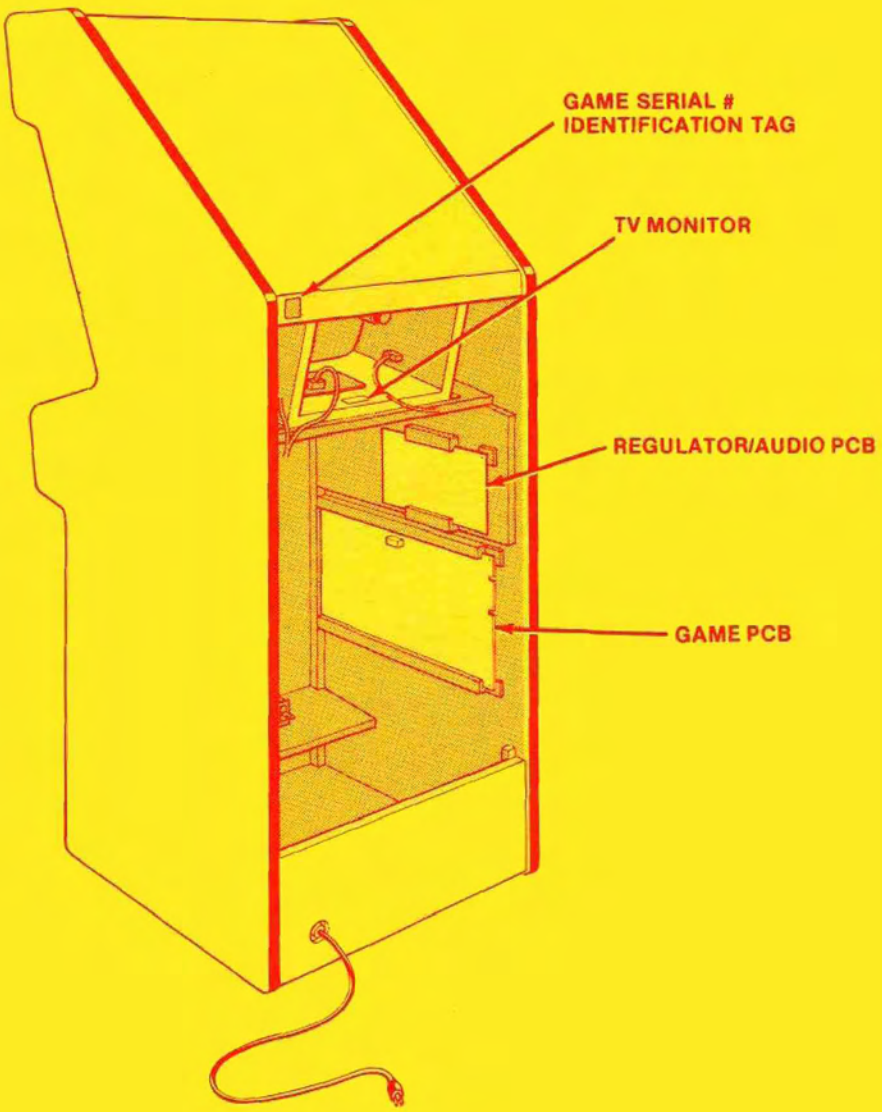

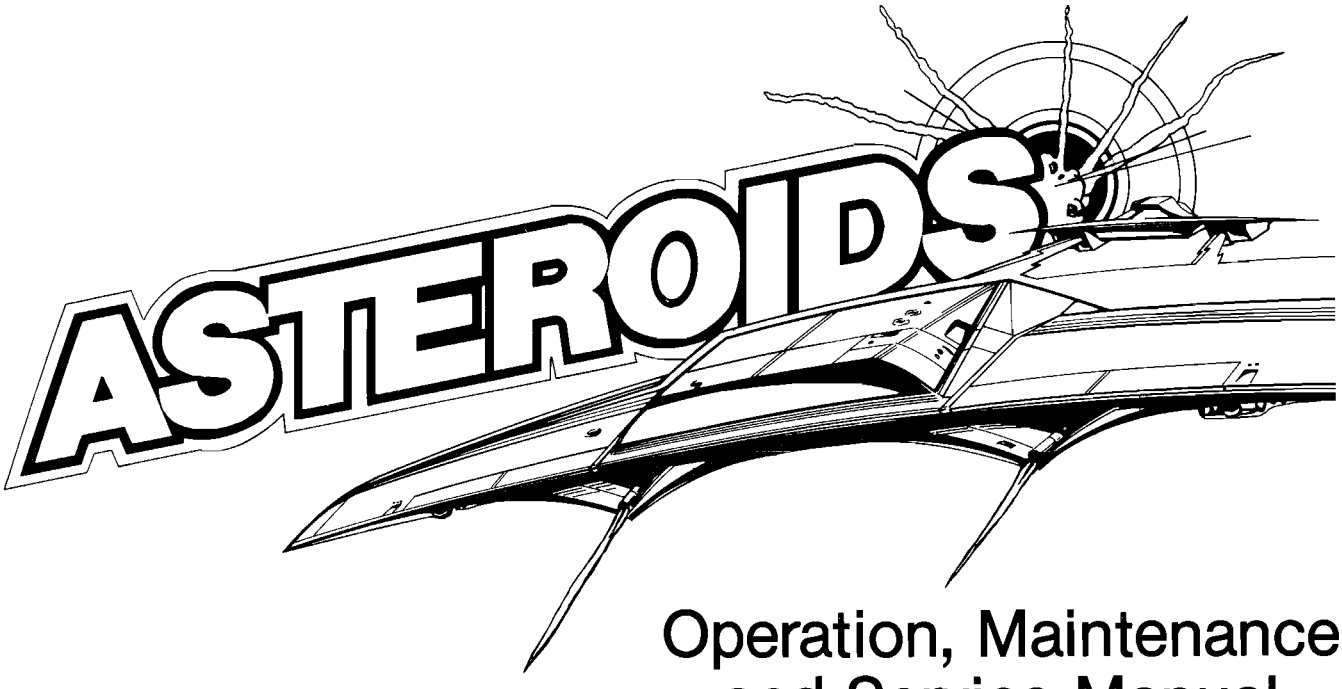

Operation, Maintenance and Service Manual

Complete with Illustrated Parts Lists

Published by:
ATARI INC
1265 Borregas Avenue
P. O. Box 427
Sunnyvale, California 94086

Copyright © 1979 by Atari, Inc. All rights reserved

No part of this publication may be reproduced by any mechanical, photographic, or electronic process, or in the form of a phonographic recording, nor may it be stored in a retrieval system, transmitted, or otherwise copied for public or private use, without permission from the publisher.

ATARI®

Lithographed in the U.S.A. 1J

A Warner Communications Company

Table of Contents

1 Location Setup

A. New Parts 1
B. Game Inspection 3
C. Game Installation 3
  1. Voltage Selection 3
  2. Interlock and Power On/Off Switches 3
  3. Game Fuses 5
D. Self-Test Procedure 5
E. Game Play 8
  1. Attract Mode 8
  2. Ready-to-Play Mode 8
  3. Play Mode 8
  4. High Score Initial Mode 9

2 Maintenance and Repair

A. Cleaning 12
B. Fuse Replacement 12
C. Opening the Control Panel 12
  1. Leaf Switch Replacement 12
  2. LED Switch Replacement 12
D. TV Monitor Replacement 14
E. Printed Circuit Board Replacement 15
F. Fluorescent Tube Replacement 16
G. Game Operation 16

3 Illustrated Parts Lists

List of Illustrations

Figure 1	Overview of Game	2
Figure 2	Installation Requirements	3
Figure 3	Power Supply	4
Figure 4	Interlock and Power On/Off Switches	4
Figure 5	Location of Self-Test Switch, Volume Control and Option Switches	5
Figure 6	Self-Test Procedure	6
Figure 7	Option Switch Settings	7
Figure 8	Opening the Control Panel	13
Figure 9	TV Monitor Removal	14
Figure 10	Game and Regulator/Audio PCB Replacement	15
Figure 11	Fluorescent Tube Replacement	16
Figure 12	Power Distribution	17
Figure 13	Signal Distribution	18
	Illustrated Parts Lists:	
Figure 14	Final Assembly	20
Figure 15	Control Panel Assembly	22
Figure 16	Astercids Game PCB Assembly	24
Figure 17	Regulator/Audio PCB Assembly	28
Figure 18	Power Supply Assembly for X-Y Games	30
Figure 19	Main Harness and Component Assembly	32
Figure 20	Fluorescent Light Assembly	33
Figure 21	Coin Door Assembly	34
Figure 22	Front Bezel Assembly	36
Figure 23	New Coin Door	38

NOTE

If reading through this manual does not lead to solving a certain maintenance problem, call Tele-Help™ at the Atari Customer Service office in your geographical area, as shown in one of the two maps below. Order all parts from the California office.

WEST and CENTRAL U.S.A.

Parts for all Atari Customers. Sales and Service.

Atari Coin-Op Customer Service
1344 Bordeaux Drive, Sunnyvale, CA 94086
Telex 17-1103

(Monday - Friday, 7:30 - 4:00 pm Pacific Time)

☎ From California, Alaska or Hawaii
(408) 745-2900

☎ From anywhere else in this area
toll-free (800) 538-1611

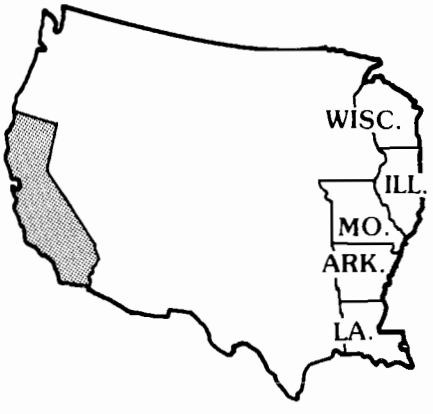

EAST U.S.A.

Sales and Service Only

Atari Inc.
New Jersey Customer Service Office
Cottontail Lane, Somerset, NJ 08873
Telex 37-9347

(Monday - Friday, 8:30 - 5:00 pm Eastern time)

☎ From New Jersey
(201) 469-5993

☎ From anywhere else in this area
toll-free (800) 526-3849



Location Setup

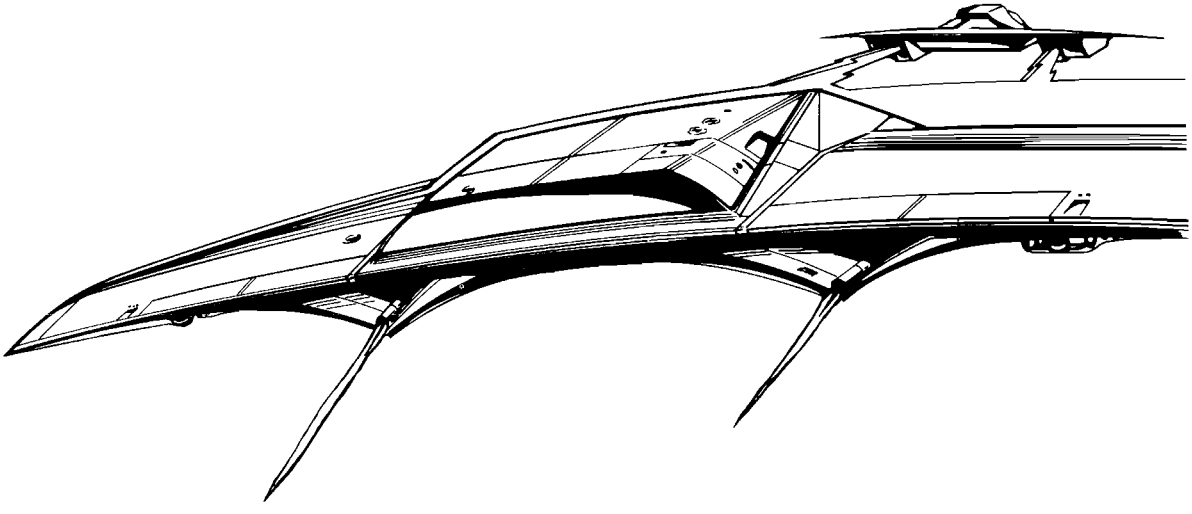

A. New Parts

The Asteroids game has three new parts. If you have worked on Atari games in the past, then you should be aware of these important differences. The new parts are:

- Power Supply Assembly. It covers a wider voltage range than before, has higher reliability, a smaller overall size, and all fuse numbers and fuse amperages are marked directly on the metal chassis.
- Game PCB Circuitry and TV Monitor. Most video games to date have used the raster scan method of display. This game uses vector generation with X and Y axes to allow greater contrast, a greater number of moving objects on the screen, and lines at any angle to be "drawn" on the screen.

Throughout this manual, wherever one of these three new parts is mentioned, you will see this symbol in the page margin:



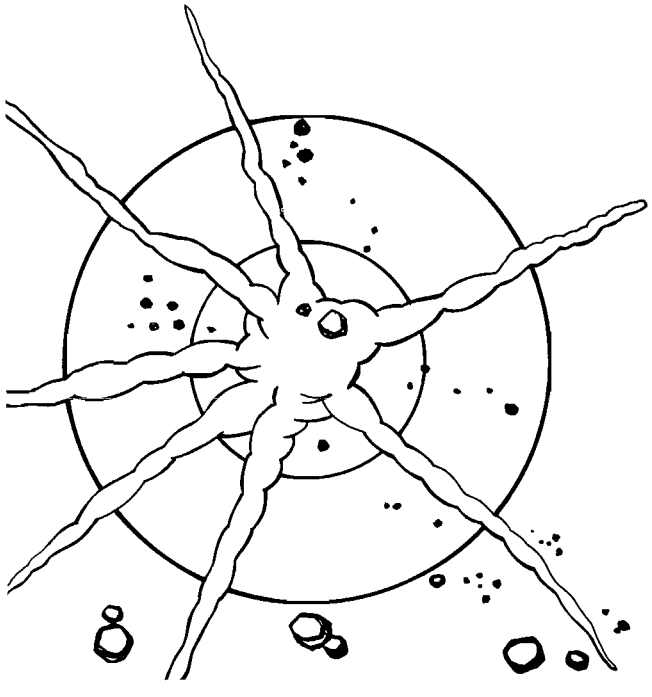

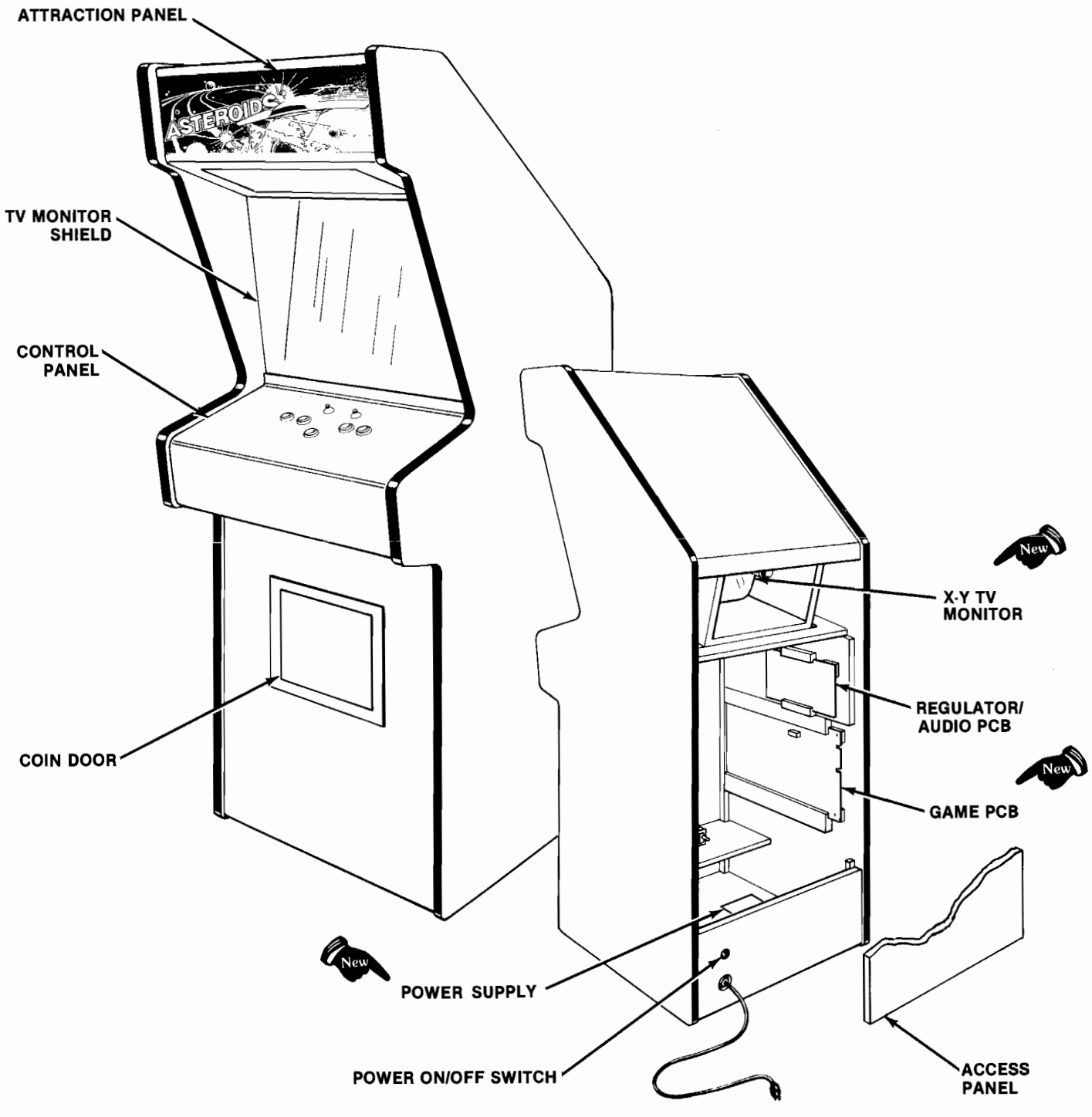

Figure 1 Overview of Game

B. Game Inspection

This new game is ready to play upon removal from the shipping carton. However, your careful inspection is needed to supply the final touch of quality control. Please follow these steps to help us insure that your new game was delivered to you in good condition.

NOTE

Do not plug the game in yet!

1. Examine the exterior of the game cabinet for dents, chips, or broken parts.
2. Unlock and open the access panel of the cabinet and inspect the interior of the game as follows:
   a. Check that all plug-in connectors (on the game harness) are firmly seated. Replug any connectors found unplugged. DON'T FORCE CONNECTORS TOGETHER. The connectors are keyed so they only go on in the proper orientation. A reversed edge connector will damage a PCB.
   b. Check that all plug-in integrated circuits on the game PCB are firmly seated in their sockets.

⚠ WARNING

To avoid possible unpleasant electrical shock, do not touch internal parts of the TV monitor with your hands or metal objects held in your hands!

   c. Note the location of the game's serial number—it is on the metallic label on the back of the game cabinet. Verify that the serial numbers also stamped on the Game PCB, Regulator/Audio PCB and TV Monitor are all identical. A drawing of the serial number locations is on the inside front cover of this manual. Please mention this number whenever you call your distributor for service.
   d. Check all major subassemblies such as the power supply, control panel and TV monitor for secure mounting.

C. Game Installation

Figure 2 Installation Requirements

Power	175 watts
Temperature	0 to 38° C (32 to 100°F)
Humidity	Not over 95% relative
Space Required	65 x 79 cm (25½ x 31 in.)
Game Height	184 cm (72½ in.)



1. Voltage Selection

Before plugging in your game, make sure that the voltage selection plug on the power supply (see Figure 3) is correct for your location's line voltage. Check the wire color on the plug and see if it is correct per the list below.

Line Voltage Range	Voltage Selection Plug Color
90-110 VAC (100)	Violet
105-135 VAC (120)	Yellow
200-240 VAC (220)	Blue
220-260 VAC (240)	Brown

2. Interlock and Power On/Off Switches

To minimize the hazard of electrical shock while working on the inside of the game cabinet, two interlock switches have been installed (see Figure 4). One is located behind the access panel and one is behind the coin door. These switches remove all AC line power from the game circuitry when a door is opened.

Check for proper operation of the interlock switches by performing the following steps:

1. Unlock and open the access panel and the coin door.
2. Plug the AC line power cord into an AC outlet.
3. Close the access panel and coin door.

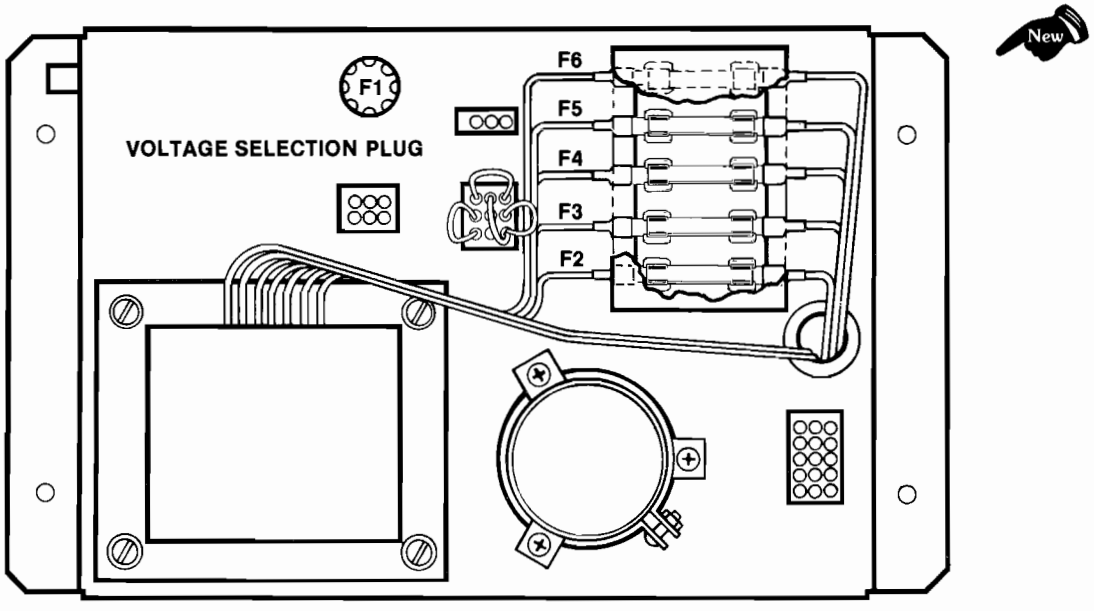

Figure 3 Power Supply

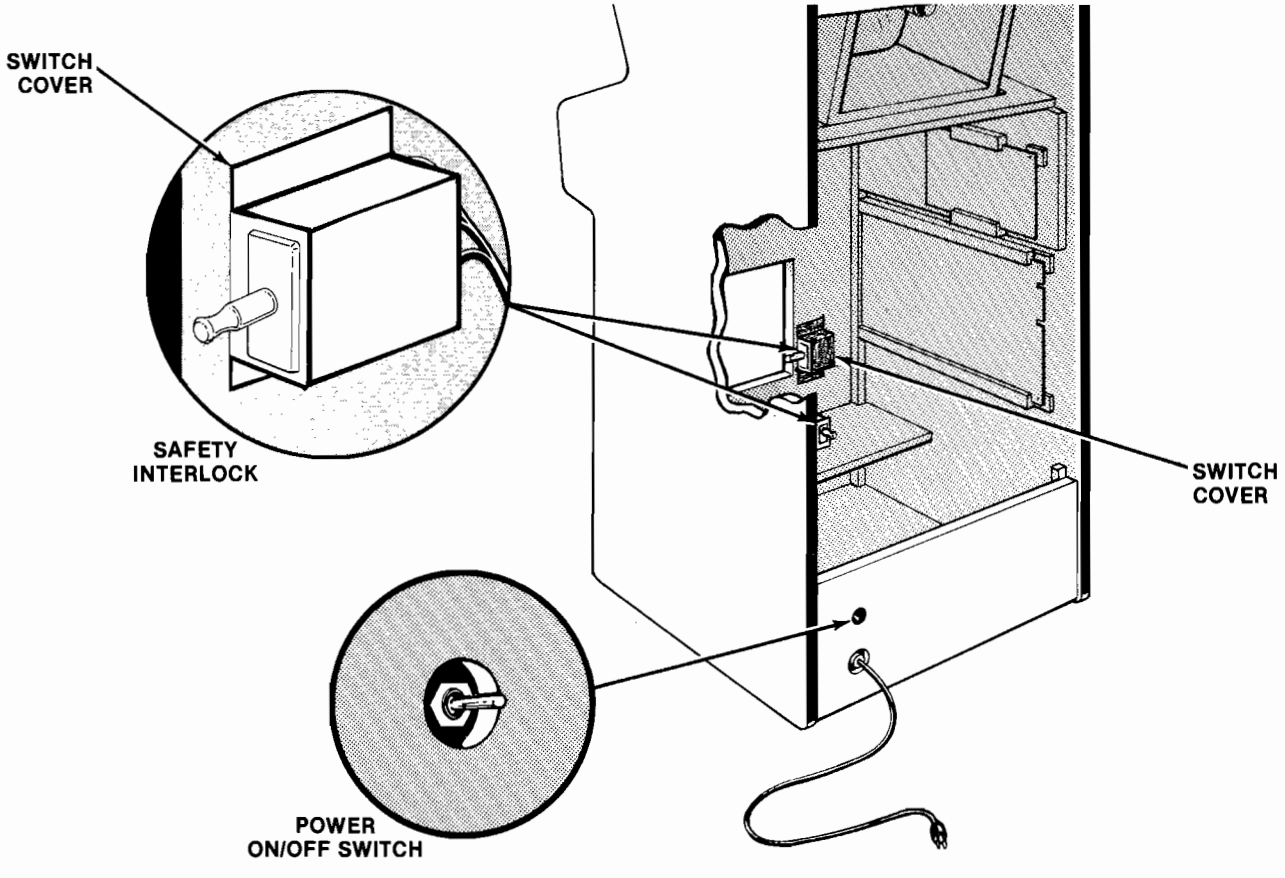

Figure 4 Interlock and Power On/Off Switches

4. Set the power on/off switch to the on position. Within 30 seconds the TV monitor should display a picture.
5. Slowly open the rear access panel. The TV monitor picture should disappear when the panel is opened approximately 2.5cm (1 inch). Close and lock the access panel and repeat this step with the coin door.
6. If the results of step 5 are satisfactory, the interlock switches are operating properly. If the TV monitor doesn't go off as described, check to see if the corresponding interlock switch is broken from its mounting or stuck in the on position.

3. Game Fuses

For continued protection of your game, as well as for the safety of the players, fuses must be replaced **only** with fuses with identical ratings. These ratings are shown in Figure 18. See the Schematic Drawing Package for fuse functions.

Information on the TV monitor fuses is contained in the TV monitor manual that is supplied with this game.

D. Self-Test Procedure

This game will test itself and provide data to demonstrate that the game's circuitry and controls are operating properly. The data is provided on the TV monitor and the game speaker; no additional equipment is necessary.

Part of the self-test procedure includes a display of the operator-selectable game options. Therefore, we suggest you run the self-test procedure anytime you need to change the game's options.

To run the self-test, follow the instructions outlined in Figure 6.

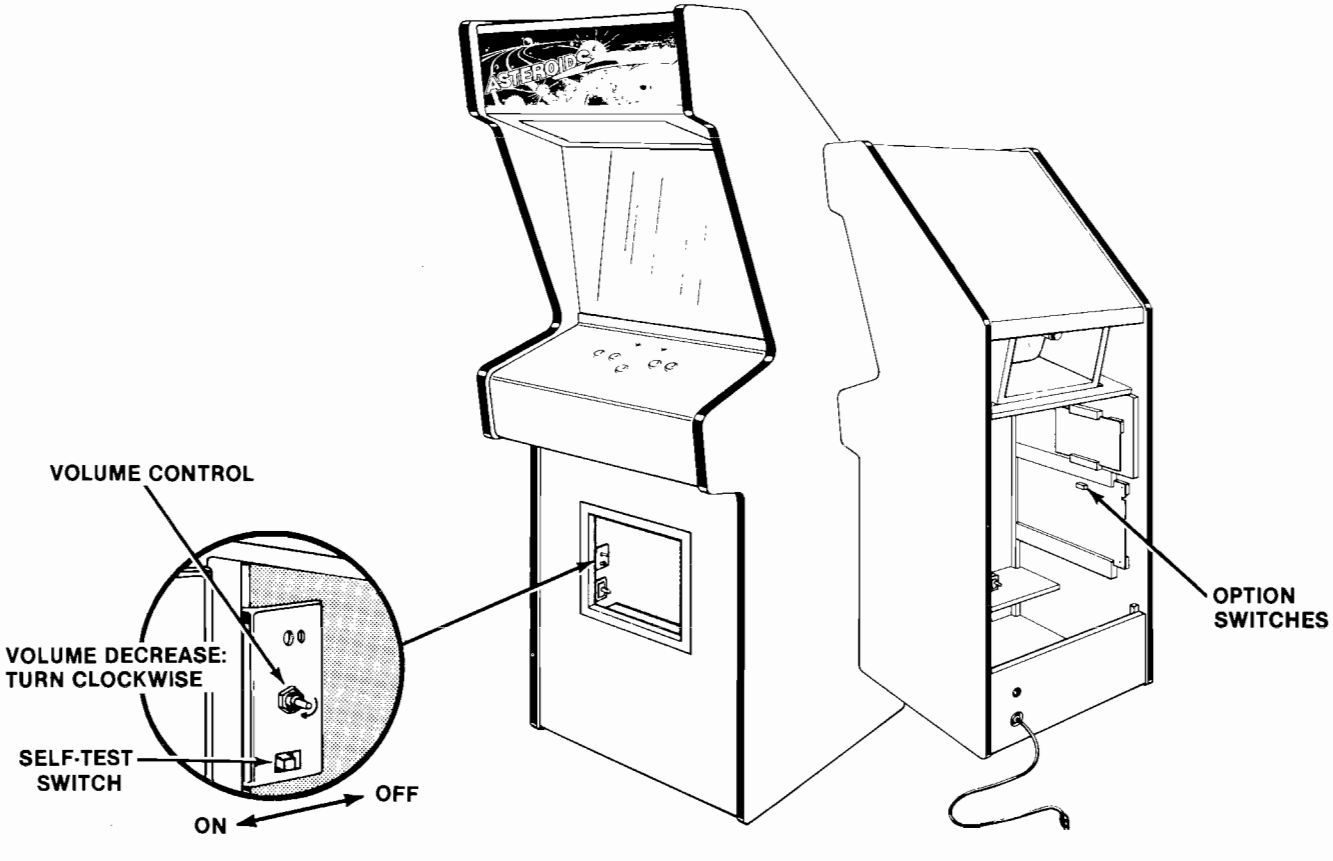

Figure 5 Location of Self-Test Switch, Volume Control and Option Switch

Figure 6 Self-Test Procedure

INSTRUCTION	RESULTS IF TEST PASSES	RESULTS IF TEST FAILS
1. Set self-test switch to **on** position (see Figure 5).	TV monitor displays picture as shown in Figure 7.	*RAM FAILURE* is indicated by a sequence of from 1 to 6 tones. A low-frequency tone is heard for each good RAM chip. A much lower frequency is heard for a failing RAM chip. The sequence stops with the last failing RAM chip. To restart the sequence, press the Reset pushbutton on the game PCB or set the self-test switch to **off**, then again to the **on** position. Identify the bad RAM chip with table below. Example: Three tones, then a tone of much lower frequency indicates failure of RAM chip R4.

TONE #	RAM CHIP LOCATION
1	D2
2	E2
3	M4
4	R4
5	N4
6	P4

ROM/PROM FAILURE is indicated by two columns or lines of numbers in the upper left-hand corner of the display. The number in the left column or first line indicates the failing ROM/PROM chip(s). Identify the bad ROM/PROM with table below.

The number in the right column or second line indicates the failing data bit of the failing ROM/PROM. Identify the bad bit with the second table below. If more than one bit is failing, the displayed number(s) are hexadecimal combinations of the numbers shown below. Examples:

1) If bits D2 and D3 fail, C is displayed.
2) If bits D2, D3 and D7 fail, 8C is displayed.
3) If bits D4 and D5 fail, 30 is displayed.
4) If bits D1, D3, D5 and D6 fail, 6A is displayed

DISPLAYED NO.	FAILING ROM/PROM		
0 1	N/P3	K4, L4	
2 3	F1	F2, L1	F2, H1 L2, L1
4 5	D/E1	H2, J1	H2, J1 M2, M1
6 7	C1	K1, J2	J2, K1 N2, N1

DISPLAYED NO.	FAILING BIT
1	D0
2	D1
4	D2
8	D3
10	D4
20	D5
40	D6
80	D7

RAMSEL SIGNAL FAILURE is indicated by a **BANK ERROR** or **PAGE SELECT ERROR** message at lower middle of display.

2. Activate all control panel and coin door switches. When satisfied with test, set self-test switch to **off** position.	1 PLAYER START and 2 PLAYER START LEDs are lighted. High-pitched click for each activated switch.	1 PLAYER START and/or 2 PLAYER START LEDs not lighted. High-pitched click sound is not heard for any particular switch.

Figure 7 Option Switch Settings

To change toggle positions of the switch assembly, you need not remove the game PCB. The switch, usually colored blue, is easily accessible when the game PCB is mounted in place.

When changing the options, verify proper results on the TV monitor display during self-test. A switch toggle in the **on** position is indicated by a **0** for that switch on the TV monitor display. A switch in the **off** position is indicated by the number **1.**

Toggle Settings of 8-Toggle Switch on Game PCB								Option
8	7	6	5	4	3	2	1	
						On	On	English
						On	Off	German
						Off	On	French
						Off	Off	Spanish
					On			4-Ship Game
					Off			3-Ship Game
				On				Center Coin Mech × 1
				Off				Center Coin Mech × 2
								(Both settings are for left mech, if a 2-mech door)
		On	On					Right Coin Mech × 1
		On	Off					Right Coin Mech × 4
		Off	On					Right Coin Mech × 5
		Off	Off					Right Coin Mech × 6
On	On							Free Play
On	Off							1 Coin* for 2 Plays
Off	On							1 Coin* for 1 Play
Off	Off							2 Coins* for 1 Play

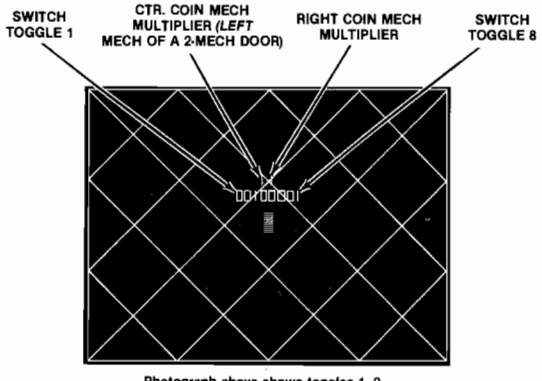

Photograph above shows toggles 1, 2, 4-7 on, and toggles 3 and 8 off.

Suggested settings are shown in illustration at right.

*Note: In the U.S. and Germany only, a "coin" is defined as 25¢ or 1 DM. If your game also has $1, 2 DM or 5 DM mechanisms, you must set the center and right coin mechanism factors as per your choice.

Toggle Settings of 4-Toggle Switch on Game PCB				For Games Having These Coin Doors:	Option
4	3	2	1		
		On	On	Thai 1 Baht/1 Baht, German 1 DM/1 DM, U.S. 25¢/25¢, Belgian or French 5 Fr/5 Fr, Swiss or French 5 Fr/5 Fr, U.S. 25¢/25¢/25¢, Japanese Y100/Y100, Swedish 1 Kr/1 Kr, U.K. 10 P/10 P, Australian 20¢/20¢, or Italian 100 L/100 L	All 3 coin mechanisms are same denomination; all register on **one** coin counter.
		Off	On	German 2 DM/1 DM, German 1 DM/5 DM, U.S. 25¢/25¢/$1, or U.S. 25¢/$1	Left and center mechanisms are same denomination; right mech is another denomination. Requires **two** coin counters.
		On	Off	*No coin door is currently designed for this configuration.*	Left mech is one denomination; center and right mech are another denomination. Requires **two** coin counters.
		Off	Off	German 1 DM/2 DM/5 DM	Left, center and right mechs are 3 different denominations. Requires **three** coin counters.

E. Game Play

Atari's Asteroids game has five possible modes of operation: Attract, Ready-to-Play, Play, High Score Initial, and Self-Test. Self-test is a special mode for checking the game switches and computer functions. You may enter this mode at any time. When entered, all game credits are cancelled.

1. Attract Mode

The attract mode begins when power is applied to the game, after a play or high score initial mode, or after self-test. This mode is continuous and is only interrupted when a coin is inserted and accepted or when in self-test. In this mode, the TV monitor displays two possible pictures. Both pictures have three score values across the top of the screen and a message that states the number of coins for a game. The middle score represents the high score to date. The left score is for player 1. The right score is for player 2.

One picture displays asteroids and an occasional enemy spaceship "floating" across the screen. The second picture displays up to 10 of the highest scores since the game was last powered up or since the last self-test. These two displays alternate every 16 seconds.

2. Ready-to-Play Mode

This mode begins when sufficient coins have been accepted for a one- or two-player game. It ends when the 1 PLAYER START or 2 PLAYER START pushbutton is pressed. When this mode begins, the message *PUSH START* flashes immediately below the center score at the top of the screen. The displayed pictures are otherwise the same as those shown in the attract mode.

3. Play Mode

The play mode begins when either start pushbutton is pressed. The mode ends when the player's last ship of the game is lost.

If the 1 PLAYER START pushbutton is pressed, the following picture is displayed: the PLAYER 2's score disappears; the PLAYER 1's score becomes 00, and the number of ships (3 or 4, depending on the operator's setting) for the game appears below that score. The message *PLAYER 1* also appears below the high score to date. Two seconds after pressing the 1 PLAYER START button the *PLAYER 1* message disappears, and the game ship appears at the center of the display. Four large asteroids appear and drift in from the outer edges of the display.

If the 2 PLAYER START pushbutton is pressed, the following picture is displayed: the PLAYER 1 and PLAYER 2 scores become 00, and the number of ships for the game appears below each score. The player 1 score also flashes as the message *PLAYER 1* appears below the high score to date. Two seconds after the 2 PLAYER START pushbutton is pressed, the *PLAYER 1* message disappears. The game ship for player 1 appears at the center of the display as four large asteroids appear and drift in from the outer edges of the display.

By pressing the LEFT ROTATE and RIGHT ROTATE pushbuttons on the control panel, the player may aim a spaceship toward any of the asteroids. By pressing the FIRE pushbutton, the player may shoot at the asteroids.

When shot, each large asteroid divides into two medium-sized asteroids and the game adds twenty points to the player's score. Medium-sized asteroids, when shot, divide into two small-sized asteroids, and the player receives fifty points. Small-sized asteroids, when shot, will completely disappear, and the game awards 100 points to the player. When players have shot all asteroids, a new set of large asteroids again appear and drift in from the outer edges of the TV monitor display. At the beginning of the game, four large asteroids appear. At the beginning of the next cycle when large asteroids reappear, there are six, the next time eight, and thereafter ten—to increase player challenge.

At any time during game play, a flying saucer may appear from either side of the display. The game awards players 200 points for shooting a large saucer and 1000 points for a small saucer. (The latter is a smaller target for players, though not any faster moving than the large one. It also shoots more accurately.)

The player's objective in the game is to shoot and destroy as many asteroids as possible before all his or her spaceships are destroyed. A ship is destroyed if an asteroid or saucer smashes into it, or if a flying saucer shoots it. To prevent losing a ship, the player may press the THRUST pushbutton to move out of the path of an asteroid or saucer. As an emergency maneuver, players can press the HYPERSPACE pushbutton: the ship disappears and reappears at a random location on the display—however, possibly right on top of, or in the path of, an asteroid. The ship may also explode on reentry.

The game awards an extra ship each time a player's score reaches multiples of 10,000; i.e., one ship is awarded at 10,000 points, another ship at 20,000 points, etc.

When the last ship of the game is destroyed, the message *GAME OVER* appears below the high score. This message remains for 3 seconds before the high score initial mode begins.

4. High Score Initial Mode

At the beginning of the high score initial mode, the player instructions appear at the top of the screen, and A _ _ appears at the lower center of the display. Players enter initials one character at a time. By pressing the LEFT ROTATE pushbutton, the displayed character steps through the alphabet from A to Z. By pressing the RIGHT ROTATE pushbutton, the character steps backwards through the alphabet from A to *a blank*, then from Z to A.

Once the game displays the desired letter, players should press the HYPERSPACE pushbutton to record the letter; then an A appears in the next space.

If players need only two letters for their initials, they should use the *blank* between Z and A in one of the three locations. Pressing the HYPERSPACE pushbutton a third time will cause the initials and game score to be transferred to the "10 highest scores" listing that appears during the attract mode.

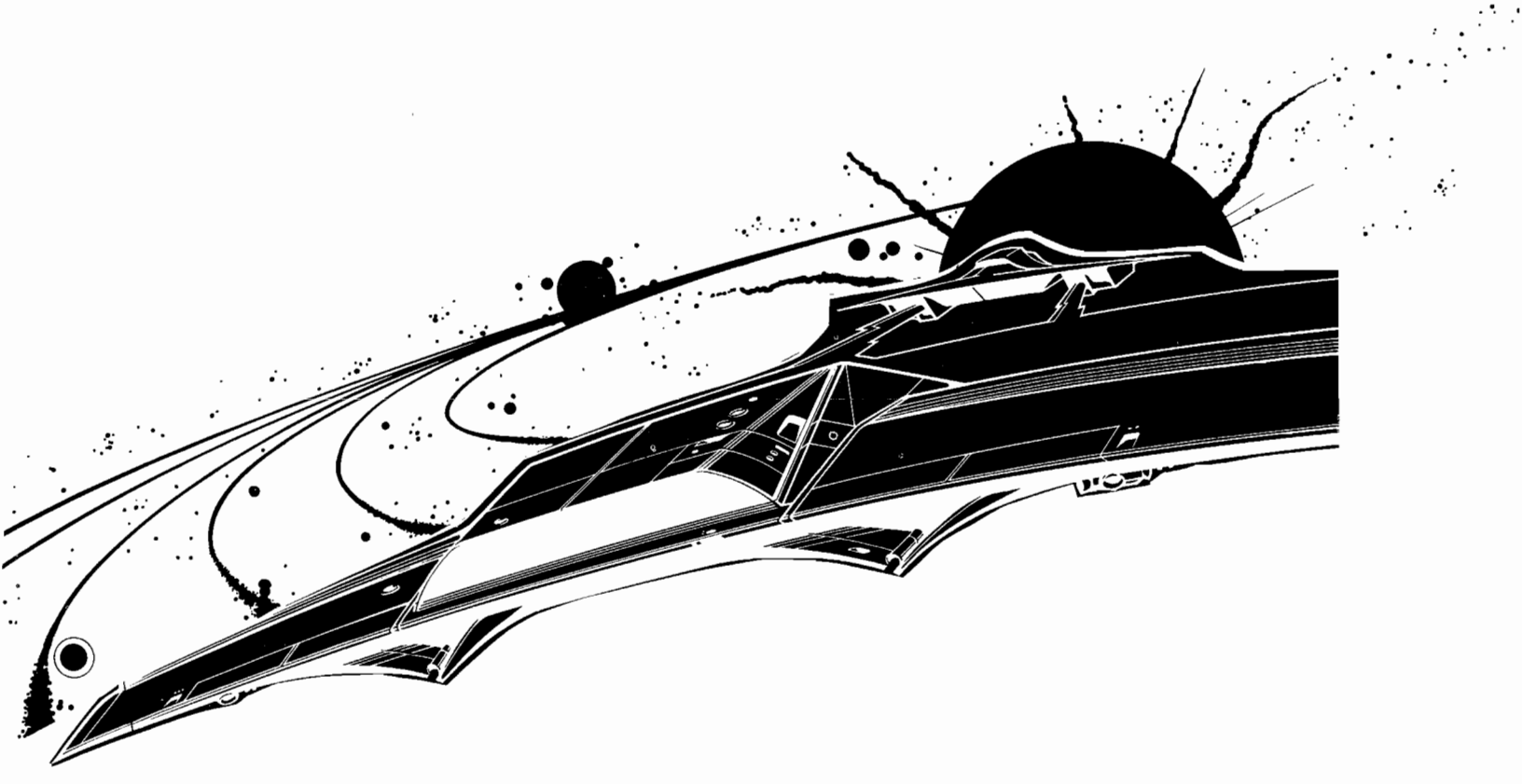

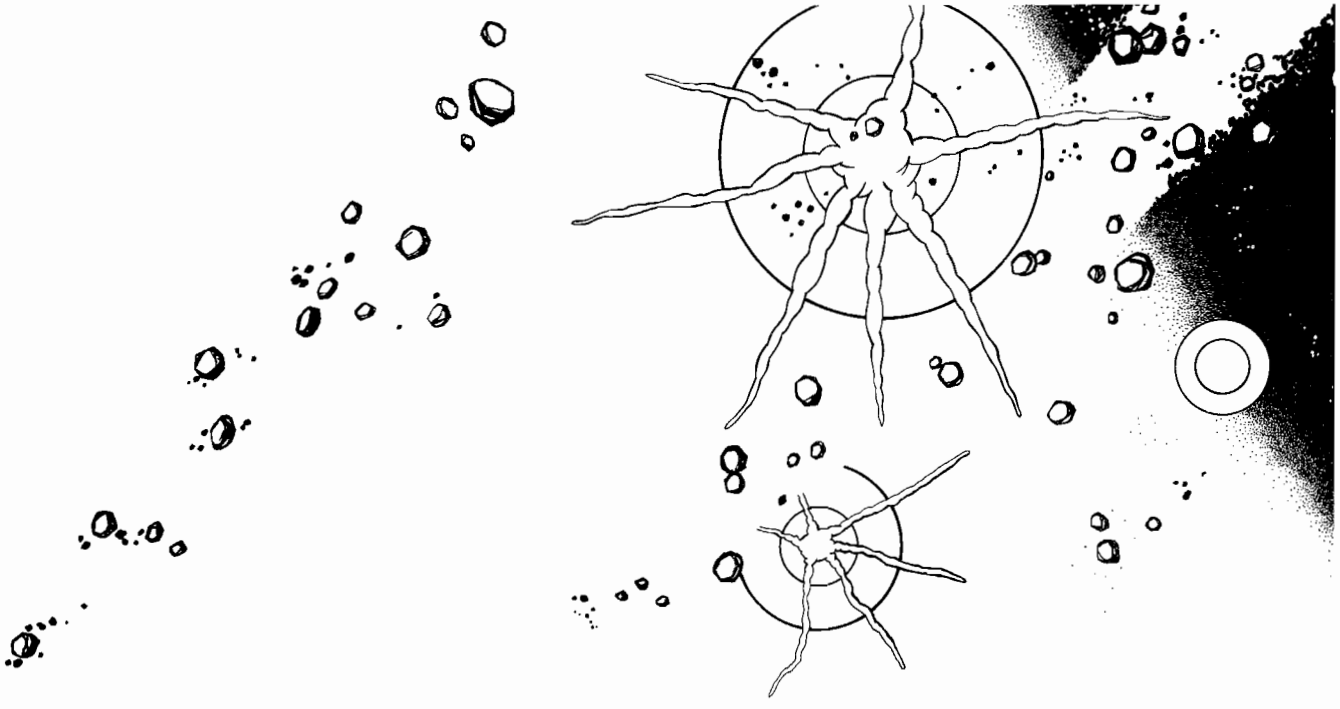

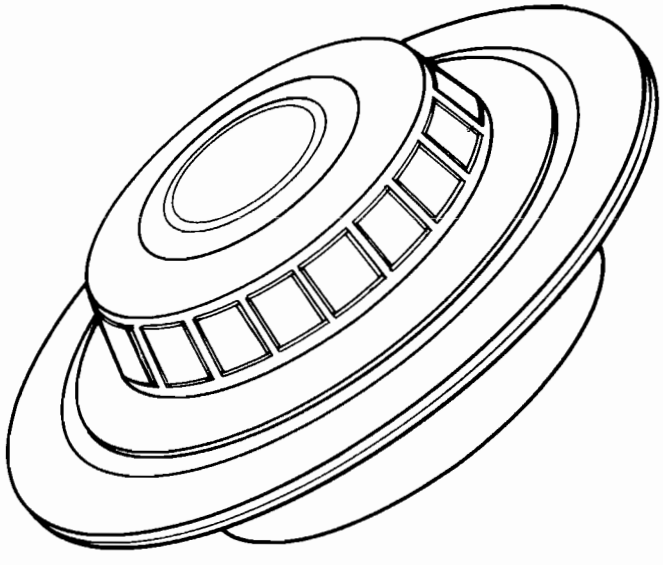

The Atari Asteroids game requires certain maintenance to keep it in good working order. Clean, properly maintained games attract players and earn more profits.

The most important maintenance item is running the self-test every time you collect money from the cash box. Just looking at a game will not tell you if LED switches or leaf switches are broken or if LEDs have burned out. The self-test will inform you of any of these possible problems.

Second, you should regularly clean the outside of the game and the coin mechanisms. In addition, you will need to regularly clean the leaf switch contacts: for details see this chapter.

Maintenance and Repair

2

A. Cleaning

The exterior of the game cabinet and the metal and acrylic surfaces may be cleaned with any non-abrasive household cleaner. If desired, special coin machine cleaners that leave no residue can be obtained from your distributor. **Do not** dry-wipe any of the acrylic panels, because any dust can scratch the surface and result in fogging the plastic.



B. Fuse Replacement

This game contains six fuses—all on the power supply assembly (not including the TV monitor fuses). Replace fuses only with the same type as listed in Figure 18 of this manual. See the Quadrascan TV monitor manual, TM-146, for the monitor fuse data.

C. Opening the Control Panel

Prior to repairing or replacing any switch on the control panel or prior to removing the TV monitor, unplug the game. Then open the coin door.

Reach through the opening and remove both sets of wing nuts, split lock washers, and flat washers, located on the underside of the control panel (see Figure 8). The two carriage bolts will remain in the control panel.

Lift up on the control panel and tilt it towards you. **Be sure that the acrylic TV monitor shield does not fall on you.** The top edge of the control panel acts as a retainer strip for the shield: once the control panel is opened, the shield is free and could slide out under its own power.

1. Leaf Switch Replacement

All five of these leaf switches operate on 5 volts at a very low current. Therefore, pitting of these switches would be extremely rare. Probably the only reason that pitting would occur is in very high-humidity locations.

Don't burnish the switches. Burnishing them removes their plating, thus increasing the corrosion of the contacts. **The best method of cleaning the switch contacts is to wipe them with a non-abrasive surface.** A business card works very well.

To replace any switch, remove both of its screws with a Phillips-head screwdriver—see Figure 8.

If the white button itself needs to be replaced, turn the stamped nut with a wrench in a counterclockwise direction, as seen from the inside of the control panel. The white ring on the outside of the control panel should not spin, due to its design.

2. LED Switch Replacement

The light-emitting diode (LED) switches on the control panel have a very low failure rate. In case a switch should ever be suspect, first test it per the description that follows. To replace the switch, refer to Figure 8.

1. Remove the wires from the suspected switch.
2. Set multimeter to ohms scale. Set ohms scale to R × 1, then zero the meter.
3. Connect multimeter leads to appropriate LED switch contacts (see Figure 8 for designation of switch contacts and meter lead placement).
4. Check contacts (push and release the switch button) for closed and open continuity.
5. If the contacts do not operate sharply or always remain closed or open, then replace the LED switch as outlined in the figure.

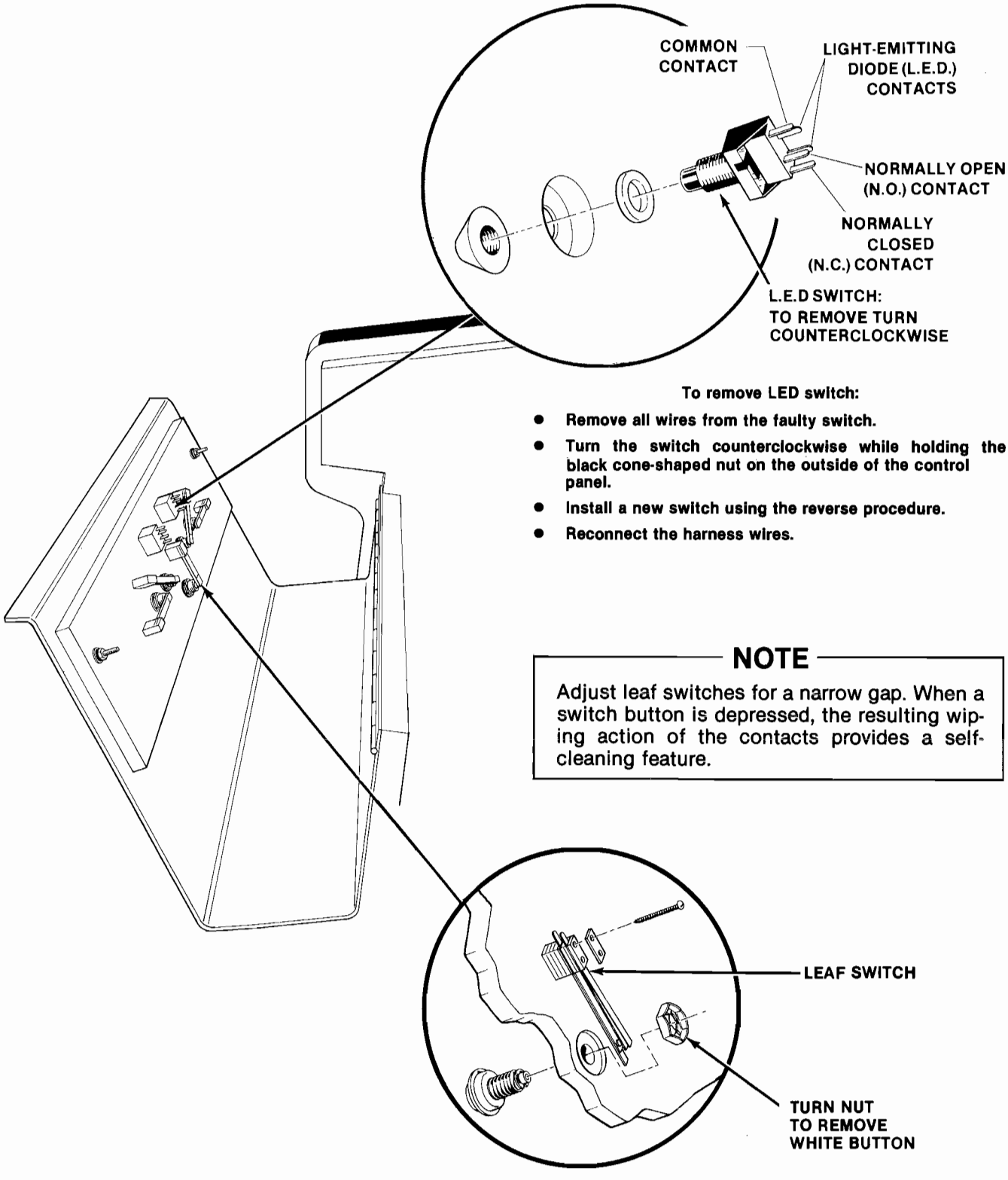

Figure 8 Opening the Control Panel

D. TV Monitor Replacement

⚠ WARNING

High voltages may exist in any television unit, even with power disconnected. Use extreme caution and do not touch electrical parts or the TV yoke area with your hands or with metal objects in your hands!

If you drop the TV monitor and it breaks, **it will implode!** Shattered glass and the yoke can fly 6 feet or more from the implosion. Use care when replacing any TV monitor.

If you should need to remove the Quadrascan X-Y TV monitor, follow steps 1 thru 6 on this page. Refer also to Figure 9 below.

1. Open the control panel as described in Section C, Opening the Control Panel. **Be sure the game is unplugged from its wall outlet!**
2. Remove the acrylic TV monitor shield by sliding its lower edge out.
3. Working up from the bottom side corners, carefully pry loose the two side flaps of the colorful 2-piece cardboard bezel. (A 4-inch strip of double-sided adhesive tape is centered behind both side flaps, flush with each edge.) Remove the bezel as a complete unit—do not remove the smaller part first.
4. Open the rear access panel and unplug the TV monitor harness connectors—both are on the TV's printed circuit boards.
5. Remove the four sets of carriage bolts, flat and split lock washers, and hex nuts that hold down the metal TV chassis.
6. Carefully slide the TV monitor chassis out the front of the game.

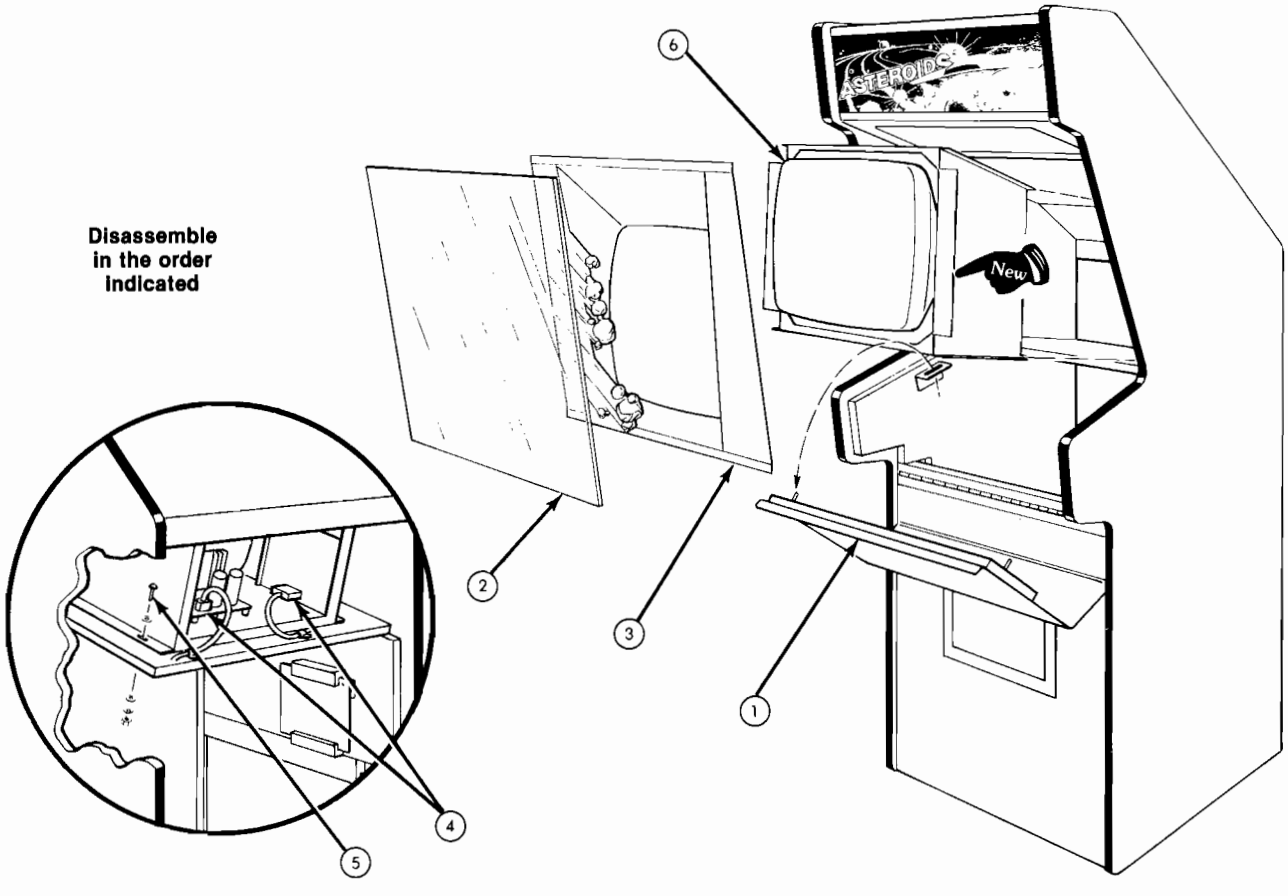

Figure 9 TV Monitor Removal

E. Printed Circuit Board Replacement

You may wish to remove the game printed circuit board (PCB) or the Regulator/Audio PCB for service or inspection. To do this, refer to Figure 10 and proceed as follows:

1. Open the rear access panel.
2. Locate the securing screws and fiber washers that hold down the PCB in its slots, and remove them. (The game PCB has two, the Regulator/Audio PCB has one set of this fastening hardware.)
3. If you are removing the game board, first remove the two machine screws or tie wraps that fasten the edge connector to the game PCB. Then unplug the edge connector on the game PCB. If you are removing the Regulator/Audio PCB, simply disconnect the three small harness connectors on this board.
4. Carefully slide either PCB straight out of its slots. Be careful not to twist the board, as this may loosen connections or components. Replace or repair as required.
5. Reinstall the PCB, making sure that the connectors are properly plugged in. Note that they are keyed to fit on only one way, so if they don't slip on easily, don't force them! **A reversed connector will probably damage your game** and will void the warranty.
6. Replace the securing screws and fiber washers in the PCB. Reinstall the fasteners used to secure the edge connectors to the PCB. Close and lock the rear access panel.
7. Check that the operation of the game is correct and **perform the self-test.** This is especially important with any game when you replace a PCB. Normally the **only** adjustments on the Asteroids game are option switch changes (made on the 4-toggle and 8-toggle DIP switches). Unless you are qualified technician, ***do not turn any of the knobs near the game PCB's edge connector. Also do not turn the small knobs on the Regulator/Audio PCB.***

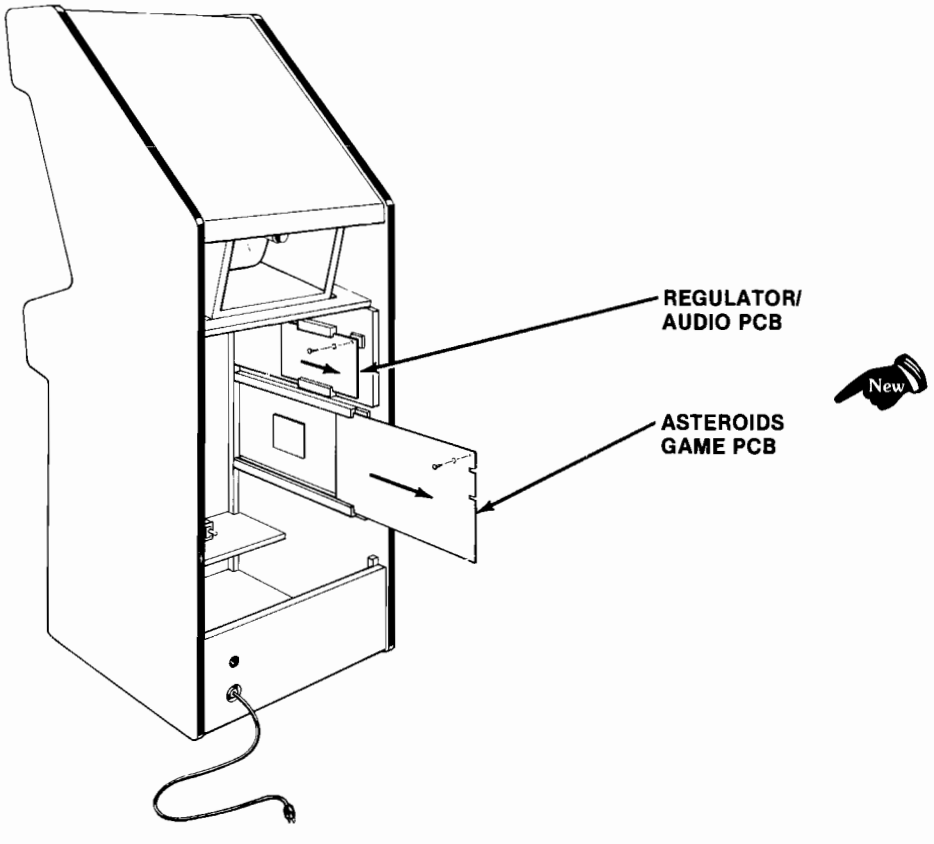

Figure 10 Game and Regulator/Audio PCB Replacement

F. Fluorescent Tube Replacement

⚠ WARNING

If you drop a fluorescent tube and it breaks, **it will implode!** Shattered glass can fly 6 feet or more from the implosion. Use care when replacing any fluorescent tube.

To replace the white fluorescent tube behind the graphics attraction panel, follow this procedure (see Figure 11).

1. Remove the three Allen-head screws at the top of the game. They secure the metal retainer for the silk-screened panel. Remove the retainer completely.
2. Tilt the top of the attraction panel towards you, then lift it up and out of the bottom retainer.
3. Remove the two grey clips from the fluorescent tube. Now turn the tube one quarter turn in either direction. Remove the tube and both orange clips.
4. Replace with a new tube. If you move games a lot from one location to another, you should reuse the orange and grey clips. They provide extra protection against vibration loosening the tube out of its fixture.
5. Close up the game by following these instructions in reverse order.

G. Game Operation

With this manual you received two large sheets that contain the wiring and schematic diagrams for the Asteroids game. Sheet 1, Side A, includes information that shows the arrangement of these diagrams. These diagrams include information that explains the functions of the circuits and defines inputs and outputs.

Atari's Asteroids is a microprocessor-controlled game. The microprocessor is contained on the game PCB. The game PCB receives switch inputs from the control panel and coin door. These inputs are processed by the game PCB and output to the TV monitor, Regulator/Audio PCB and control panel.

The TV monitor is an X-Y monitor. Therefore, the monitor receives signals for the X, Y and Z axes. Since the location of the beam in the monitor is totally controlled by the X- and Y-axis outputs of the game PCB, the game PCB does not contain a standard sync circuit. The X- and Y-axis inputs to the monitor step in increments of 1024 steps for the X (horizontal) axis and 768 steps for the Y (vertical) axis. The Z axis merely controls the intensity of the beam.

The Regulator/Audio PCB performs two funtions: 1) regulates the +10.3 VDC from the power supply to +5 VDC, and 2) amplifies the audio output from the game PCB. The +5 VDC from the Regulator/Audio PCB provides most logic power to the game PCB. The audio output from the Regulator/Audio PCB directly drives the game speaker and is controlled by the volume control mounted inside the coin door.

The Power Supply is the source of all voltages in the game. These voltages are protected by five fuses in the fuse block on the Power Supply chassis. The primary winding of the Power Supply transformer is protected by the cartridge-type fuse in the power supply chassis.

Figure 12 illustrates the distribution of power in this game. Figure 13 illustrates the distribution of signals.

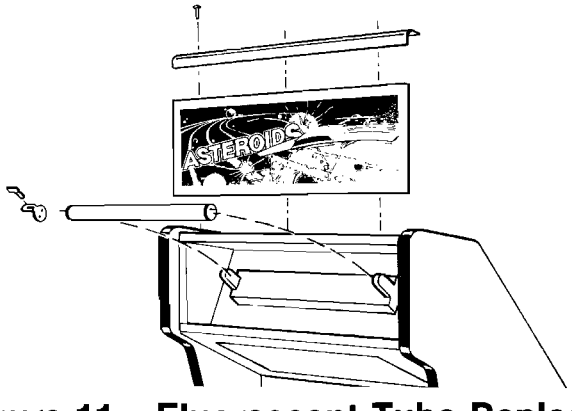

Figure 11 Fluorescent Tube Replacement

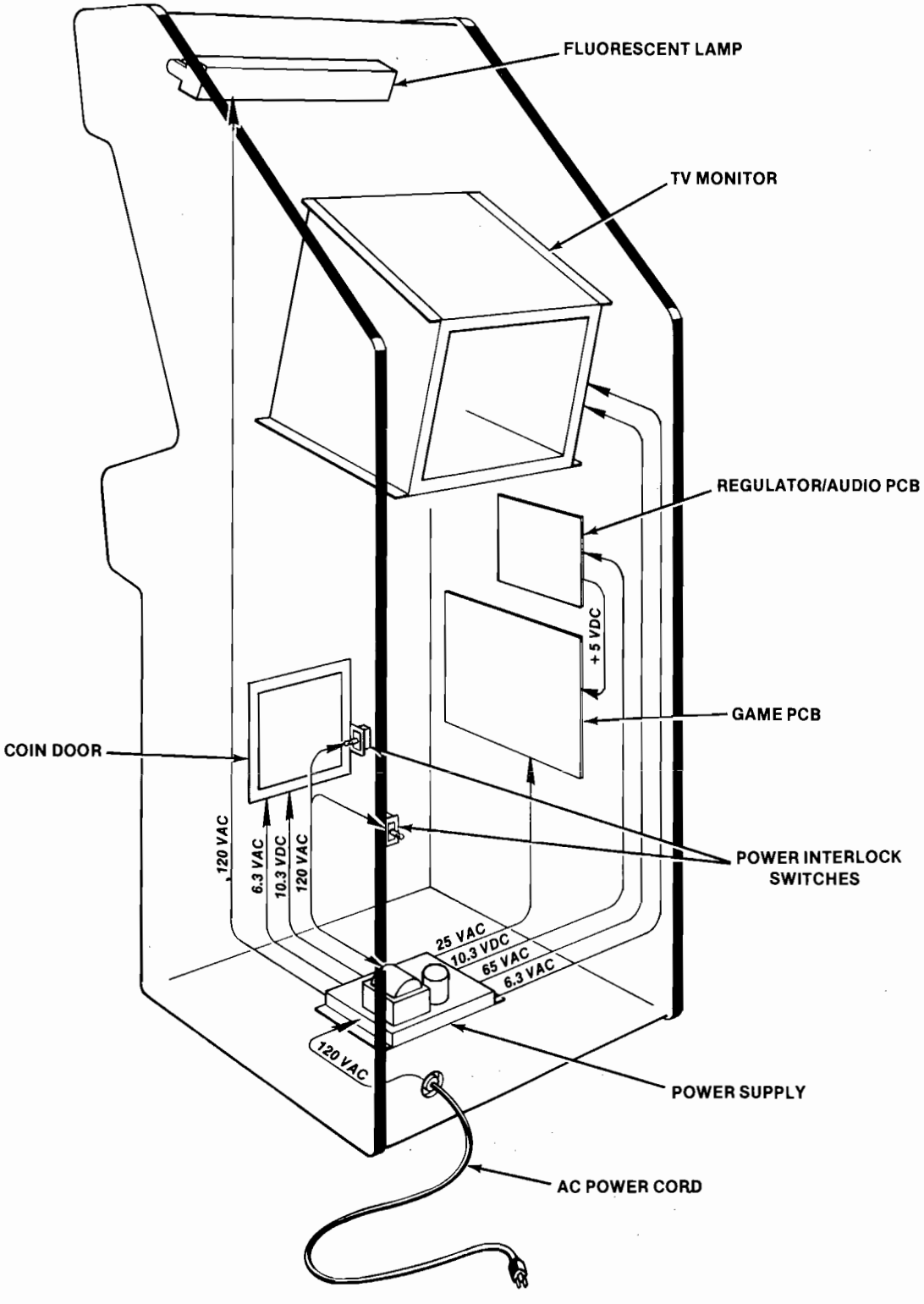

Figure 12 Power Distribution

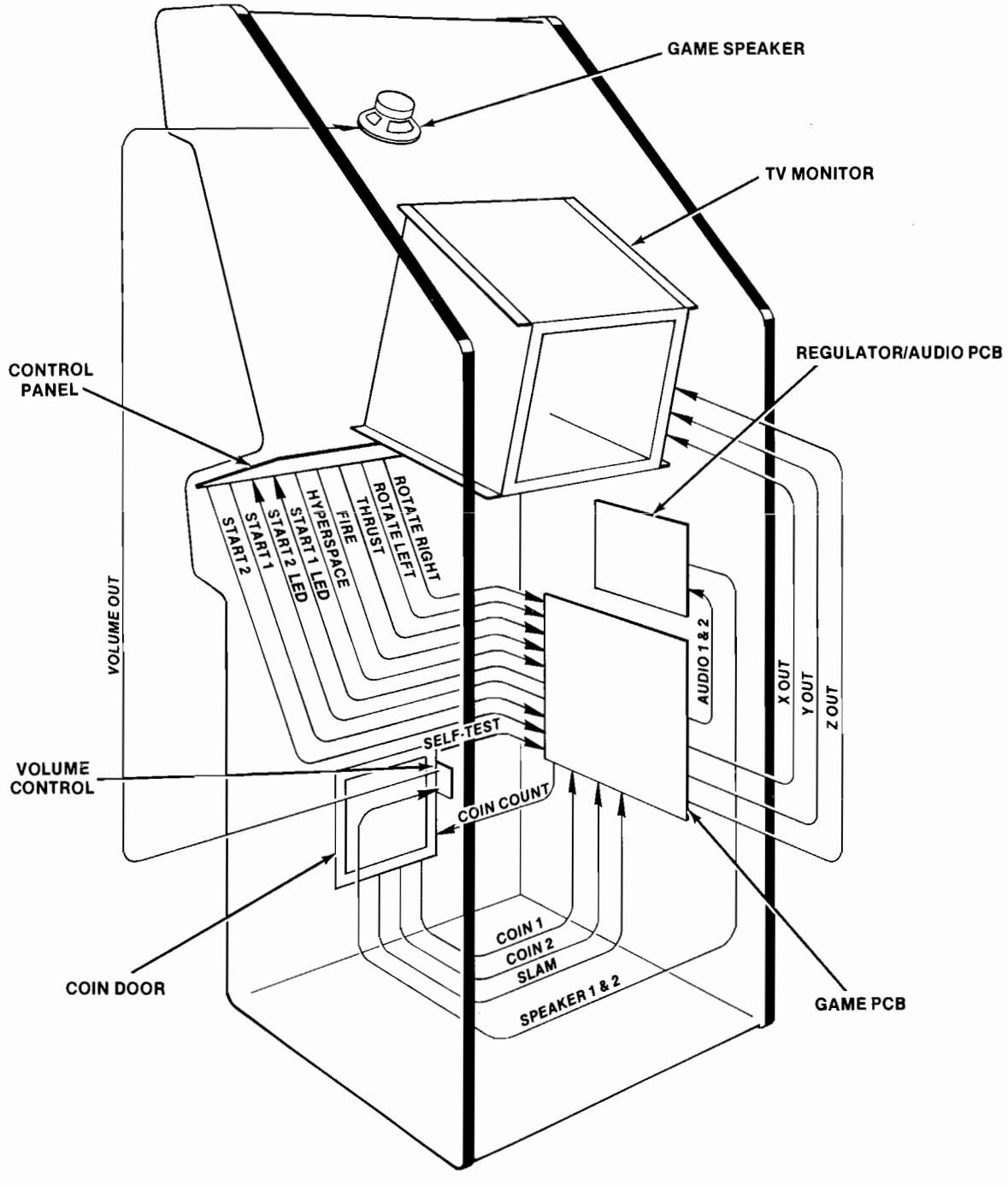

Figure 13 Signal Distribution

Illustrated Parts Lists

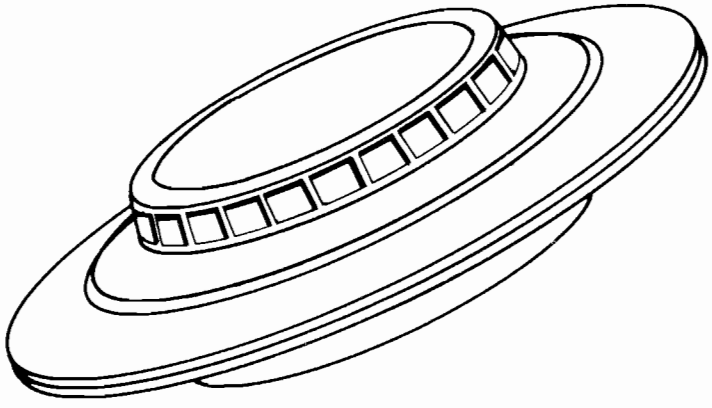

The purpose of this chapter is to provide you with the necessary information for ordering replacement parts for your Atari Asteroids game. Please note that, for simplicity, **common hardware has been deleted** from most of these parts lists. This includes screws, nuts, washers, bolts, etc.

When ordering parts from your distributor, give the part number, part name, applicable figure number of this manual, and serial number of your game. This will help to avoid confusion and mistakes in your order. We hope the results will be less downtime and more profit from your game.

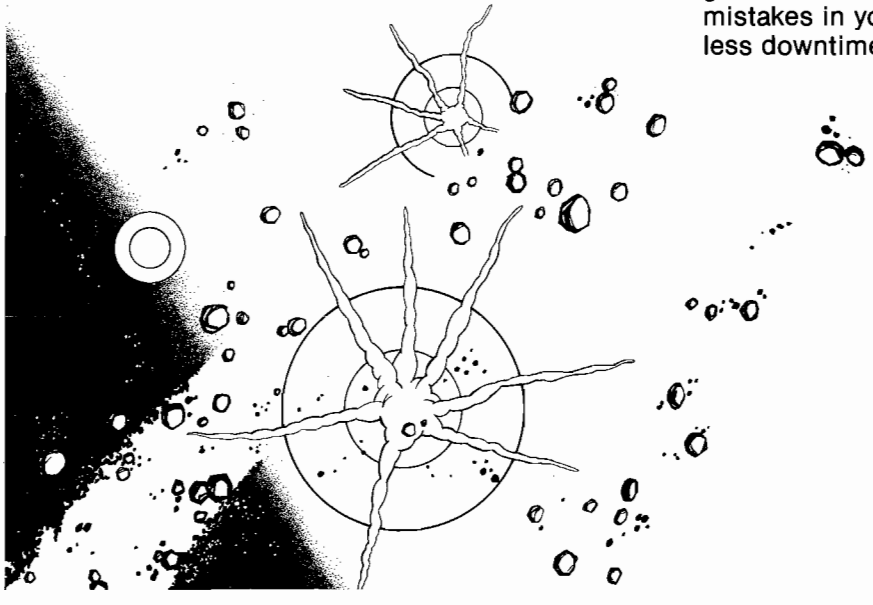

3

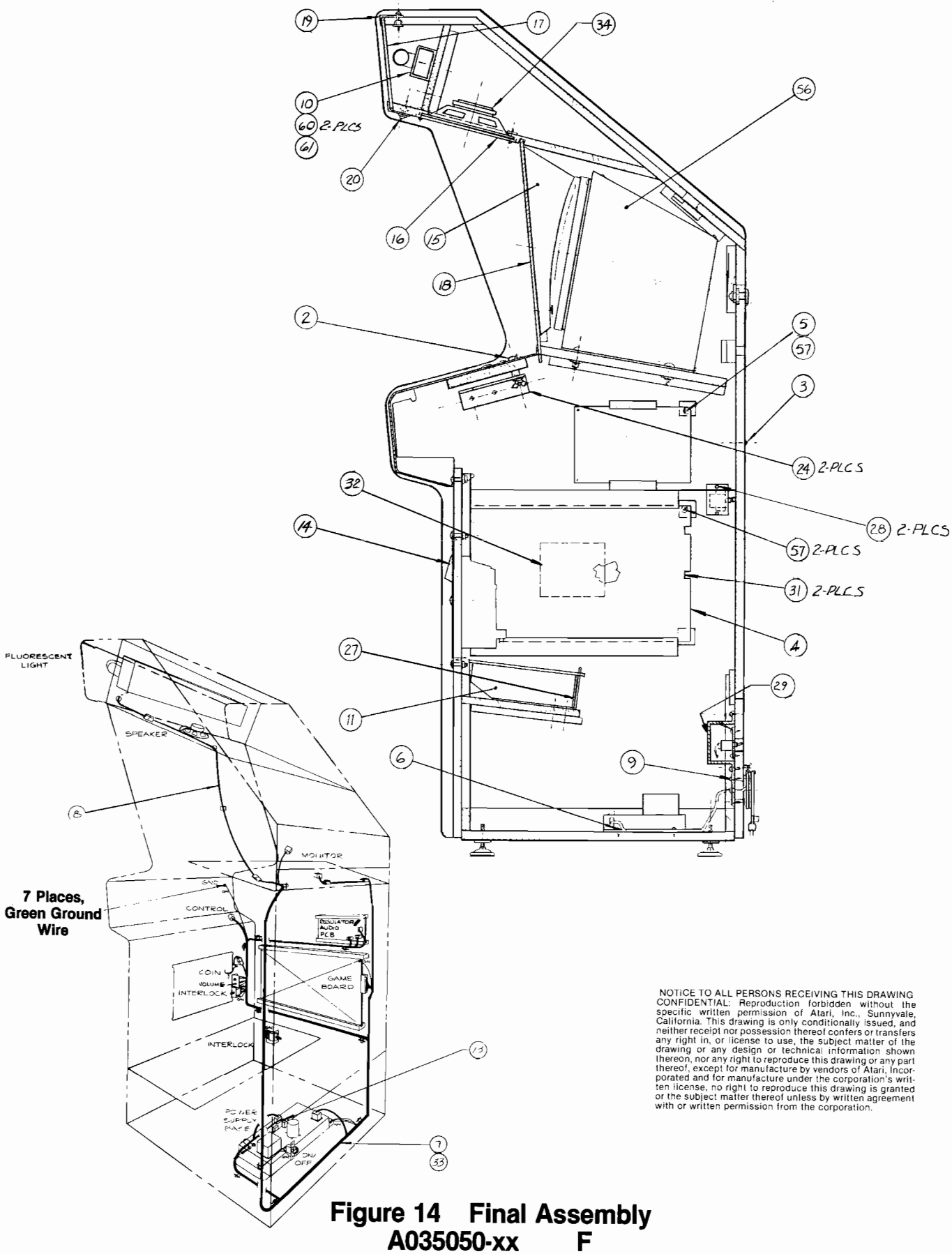

NOTICE TO ALL PERSONS RECEIVING THIS DRAWING CONFIDENTIAL: Reproduction forbidden without the specific written permission of Atari, Inc., Sunnyvale, California. This drawing is only conditionally issued, and neither receipt nor possession thereof confers or transfers any right in, or license to use, the subject matter of the drawing or any design or technical information shown thereon, nor any right to reproduce this drawing or any part thereof, except for manufacture by vendors of Atari, Incorporated and for manufacture under the corporation's written license, no right to reproduce this drawing is granted or the subject matter thereof unless by written agreement with or written permission from the corporation.

Figure 14 Final Assembly
A035050-xx F

Figure 14 Final Assembly Parts List

Item	Part No.	Description
2	A035053-01	Control Panel Assembly—see Figure 15
3	A035056-01	Access Panel Assembly
4	A034986-01	Asteroids Game PCB Assembly (PROM version)—see Figure 16
	OR	
	A034986-02	Asteroids Game PCB Assembly (ROM version)—see Figure 16
5	A034485-01	Regulator/Audio PCB Assembly—see Figure 17
6	A034561-01	Power Supply Assembly for X-Y Games—see Figure 18
7	A035158-01	Main Harness and Component Assembly—see Figure 19
	OR	
	A035158-02	Main Harness and Component Assembly
8	A034628-01	Light and Speaker Harness Assembly
9	A034841-01	Strain Relief Power Cord (domestic)
	OR	
	A034863-01	Strain Relief Power Cord (German)
10	A034752-01	Fluorescent Light Assembly—see Figure 20
11	A030268-01	Coin Box Assembly (2 holes)
	OR	
	A021700-01	Coin Box Assembly (3 holes)
13	A021084-01	Voltage Selection Plug, 100V
	A021084-02	Voltage Selection Plug, 120V
	A021084-04	Voltage Selection Plug, 220V
	A021084-05	Voltage Selection Plug, 240V
14	A009083-xx	Coin Door Assembly—see Figure 21
	OR	
	71-102201	New Coin Door (U.S. 25¢/25¢)—see Figure 23
	71-102204	New Coin Door (German 2DM/1DM)
	71-102206	New Coin Door (German 1DM/5DM)
	71-102207	New Coin Door (Belgian 5Fr/5Fr)
	71-102208	New Coin Door (Swiss 1Fr/1Fr)
	71-102209	New Coin Door (Japanese 100Y/100Y)
	71-102210	New Coin Door (U.K. 10P/10P)
	71-102211	New Coin Door (Australian 20¢/20¢)
	71-102212	New Coin Door (Italian 100L/100L)
	71-103202	New Coin Door (U.S. 25¢/25¢/25¢)
	71-103203	New Coin Door (U.S. 25¢/25¢/$1)
	71-103205	New Coin Door (German 1DM/2DM/5DM)
15	A035724-01	Cardboard Bezel Assembly with Graphics
16	034457-01	Speaker Grille
17	035051-01	Acrylic Attraction Panel with Graphics
18	035049-01	TV Monitor Shield with Graphics
19	034515-01	Upper Retainer Strip
20	034516-01	Lower Retainer Strip
23	TM-143	Asteroids Technical Manual
24	001638-01	Control-Panel Mounting Bracket
27	006870-01	Coin Box Bracket
28	007882-02	Interlock Switch Cover
29	007103-01	On/Off Switch Cover
31	78-24012	5″ Beaded Nylon Tie Wrap
32	034536-02	Foam Vibration Damper for Game PCB
33	A035319-01	Coin Door Adapter Harness (only for A009083-xx coin door)
34	48-001	8″ High-Fidelity Speaker
36	035437-01	Connector Mount for TV Monitor
56	92-042	19" X-Y Black-and-White TV Monitor
57	75-07017	Fiber Washer

Figure 14 Final Assembly, continued
Parts List

Item	Part No.	Description
60	99-11006	Lamp Socket Clip (each clip includes 2 pieces)
61	70-303	18" 15-Watt Cool White Fluorescent Lamp
65	TM-146	Manual for Quadrascan X-Y Monitor
66	DP-143-01	Asteroids Schematic Drawings (Sheet 1)
67	DP-143-02	Asteroids Schematic Drawings (Sheet 2)

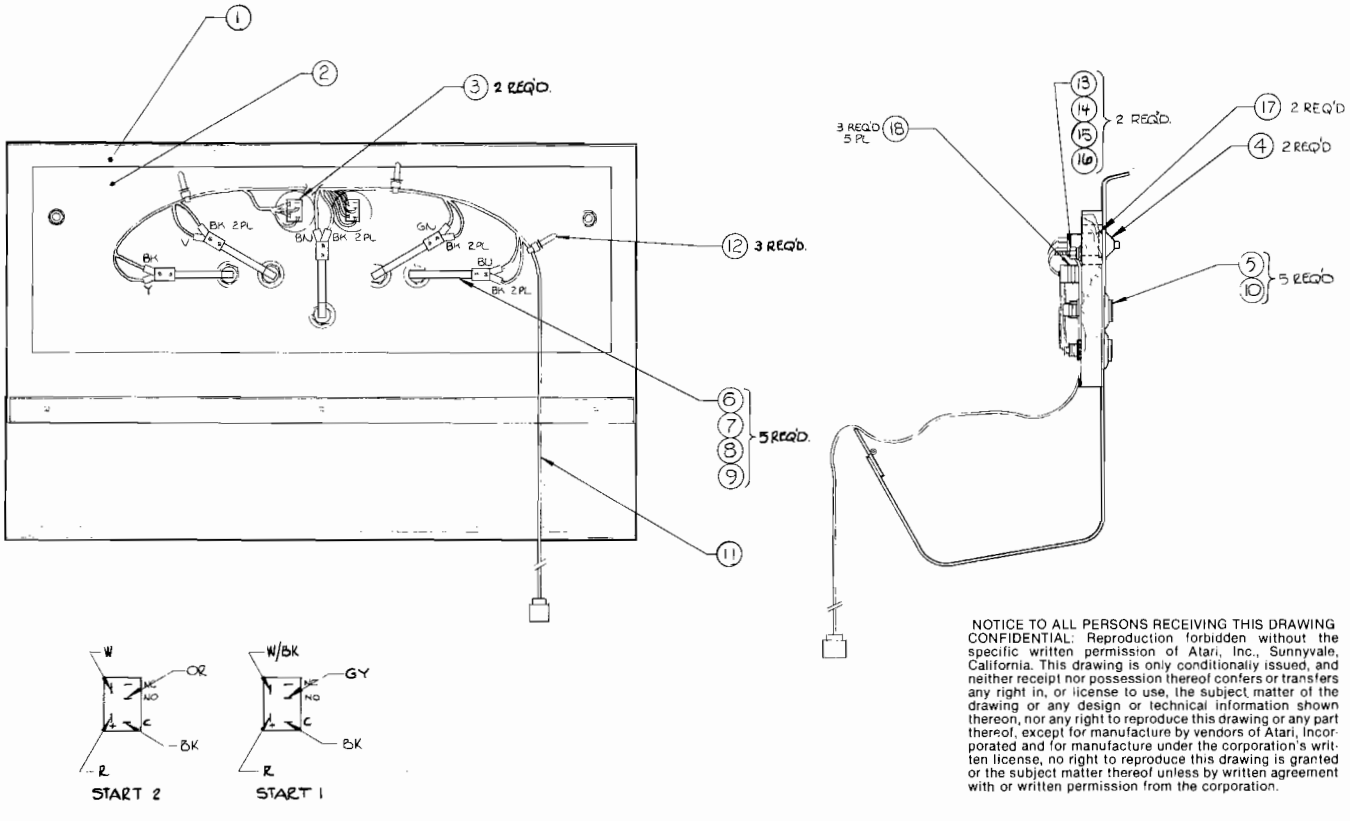

NOTICE TO ALL PERSONS RECEIVING THIS DRAWING CONFIDENTIAL: Reproduction forbidden without the specific written permission of Atari, Inc., Sunnyvale, California. This drawing is only conditionally issued, and neither receipt nor possession thereof confers or transfers any right in, or license to use, the subject matter of the drawing or any design or technical information shown thereon, nor any right to reproduce this drawing or any part thereof, except for manufacture by vendors of Atari, Incorporated and for manufacture under the corporation's written license, no right to reproduce this drawing is granted or the subject matter thereof unless by written agreement with or written permission from the corporation.

Figure 15 Control Panel Assembly A035053-01 C

Item	Part No.	Description
1	035047-01	Control Panel with Graphics
2	035046-01	Control Panel Support
3	62-039	Light-Emitting Diode Switch
4	001856-01	Aluminum Switch Bushing
5	A035798-01	Pushbutton Assembly
6	99-080023	Leaf Switch
7	021105-01	Metal Header Plate for Leaf Switch
11	A035159-01	Control Harness Assembly
17	75-07054	Flat Nylon Washer
18	60-06015	Phenolic Switch Spacer, 3/8" Hole Spacing × .094" Thick

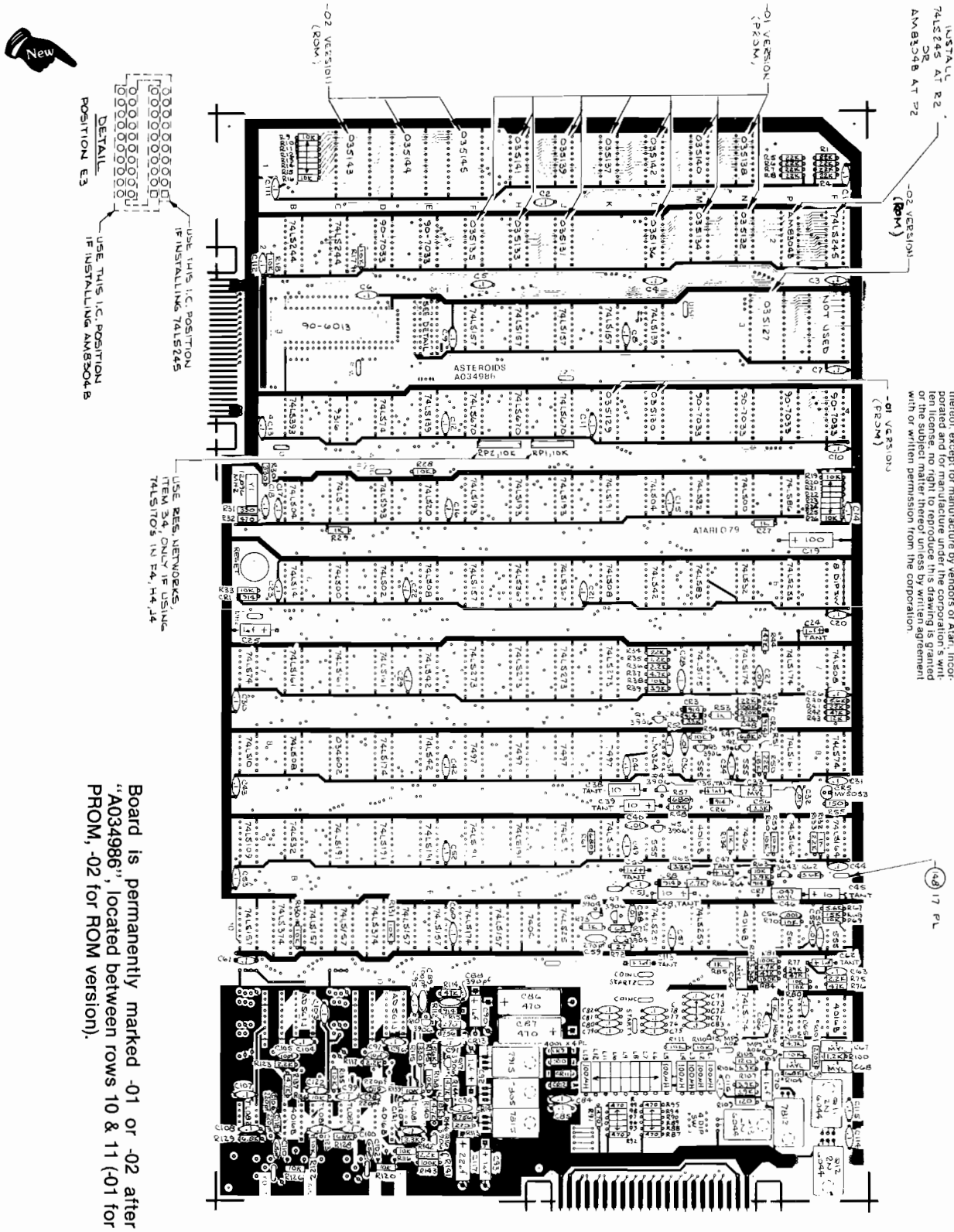

Board is permanently marked -01 or -02 after "A034986", located between rows 10 & 11 (-01 for PROM, -02 for ROM version).

Figure 16 Asteroids Game PCB Assembly A034986-01 and -02 F

Figure 16 Asteroids Game PCB Assembly Parts List

Item	*Part No.*	*Description (Reference Designations and Locations in Bold)*
2	100000-270	27 Ohm, ±5%, ¼W Resistor **(R72)**
3	100000-680	68 Ohm, ±5%, ¼W Resistor **(R71)**
4	100000-121	120 Ohm, ±5%, ¼W Resistor **(R105, 109)**
5	100000-151	150 Ohm, ±5%, ¼W Resistor **(R55)**
6	100000-331	330 Ohm, ±5%, ¼W Resistor **(R30, 31, 115)**
7	100000-471	470 Ohm, ±5%, ¼W Resistor **(R32, 87-99)**
8	100000-681	680 Ohm, ±5%, ¼W Resistor **(R57, 61)**
9	100000-102	1K Ohm, ±5%, ¼W Resistor **(R27, 29, 53, 73, 85, 86, 132, 134)**
10	100000-271	270 Ohm, ±5%, ¼W Resistor **(R112-113)**
11	100000-122	1.2K Ohm, ±5%, ¼W Resistor **(R35, 100)**
12	100000-222	2.2K Ohm, ±5%, ¼W Resistor **(R36, 75, 117, 123, 133, 141)**
13	100000-272	2.7K Ohm, ±5%, ¼W Resistor **(R66)**
14	100000-332	3.3K Ohm, ±5%, ¼W Resistor **(R56, 65, 74, 142)**
15	100000-392	3.9K Ohm, ±5%, ¼W Resistor **(R39, 64, 106-108)**
16	100000-472	4.7K Ohm, ±5%, ¼W Resistor **(R37, 82, 102, 137, 140, 144)**
17	100000-562	5.6K Ohm, ±5%, ¼W Resistor **(R40, 62, 67)**
18	100000-682	6.8K Ohm, ±5%, ¼W Resistor **(R49, 104, 128, 129)**
20	100000-103	10K Ohm, ±5%, ¼W Resistor **(R9-26, 28, 33, 38, 54, 58-60, 63, 69, 70, 79, 103, 110-1, 116, 122, 130-1, 135-6, 138-9)**
21	100000-123	12K Ohm, ±5%, ¼W Resistor **(R43)**
22	100000-153	15K Ohm, ±5%, ¼W Resistor **(R68)**
23	100000-183	18K Ohm, ±5%, ¼W Resistor **(R51, 146)**
24	100000-223	22K Ohm, ±5%, ¼W Resistor **(R1-8, 34, 41, 45, 50)**
25	100000-333	33K Ohm, ±5%, ¼W Resistor **(R52)**
26	100000-473	47K Ohm, ±5%, ¼W Resistor **(R42, 44, 48, 76, 78, 83, 114)**
27	100000-563	56K Ohm, ±5%, ¼W Resistor **(R145)**
28	100000-104	100K Ohm, ±5%, ¼W Resistor **(R46, 81, 84, 143)**
29	100000-224	220K Ohm, ±5%, ¼W Resistor **(R47)**
30	100000-274	270K Ohm, ±5%, ¼W Resistor **(R101)**
33	100000-393	39K Ohm, ±5%, ¼W Resistor **(R77)**
34	19-007	10K Ohm, 8-Pin Resistor Network. Use with the LS170 only, item 120. **(RP1, 2)**
35	19-315103	10K Ohm Vertical PCB-Mounting Cermet Trimpot, Bournes Series 3352V-1-10K **(R120, 126)**
39	21-101104	.1 uf, ±10%, Radial-Lead Epoxy-Dipped 100V Mylar Capacitor **(C64, 67-69)**
40	21-101224	.22 uf, ±10%, Radial-Lead Epoxy-Dipped 100V Mylar Capacitor **(C33)**
41	21-101473	.047 uf, ±10%, Radial-Lead Epoxy-Dipped 100V Mylar Capacitor **(C46)**
44	24-250105	1.0 uf Aluminum Electrolytic Fixed Axial-Lead 25V Capacitor **(C25, 70, 90, 92, 93)**
45	24-250107	100 uf Aluminum Electrolytic Fixed Axial-Lead 25V Capacitor **(C19)**
46	24-250477	470 uf Aluminum Electrolytic Fixed Axial-Lead 25V Capacitor **(C86, 87)**
47	24-250226	22 uf Aluminum Electrolytic Fixed Axial-Lead 25V Capacitor **(C117)**
49	27-250102	.001 uf Ceramic-Disc 25V Radial-Lead Capacitor **(C56)**
50	27-250103	.01 uf Ceramic-Disc 25V Radial-Lead Capacitor **(C27, 32, 36, 40, 55, 58)**
51	27-250104	.1 uf Ceramic-Disc 25V Radial-Lead Capacitor **(C1-18, 20-23, 26, 28-31, 34, 37, 41-44, 49, 51-54, 57, 60, 61, 63, 65, 66, 71-85, 91, 94-96, 99-100, 103-104, 107-108, 111-112, 114-116, 120-123)**
53	28-101100	10 pf Radial-Lead Epoxy-Dipped 100V Mica Capacitor **(C97, 105)**
54	28-101680	68 pf Radial-Lead Epoxy-Dipped 100V Mica Capacitor **(C102, 110)**
55	28-101101	100 pf Radial-Lead Epoxy-Dipped 100V Mica Capacitor **(C89)**
56	28-101221	220 pf Radial-Lead Epoxy-Dipped 100V Mica Capacitor **(C98, 106, 118-119)**
57	28-101271	270 pf Radial-Lead Epoxy-Dipped 100V Mica Capacitor **(C59)**
58	28-101391	390 pf Radial-Lead Epoxy-Dipped 100V Mica Capacitor **(C88)**
61	29-006	1.0 uf, ±10%, 35V Tantalum Capacitor **(C24, 35, 47, 50, 62, 113)**
63	29-046	10 uf, ±10%, 20V Tantalum Capacitor **(C38, 39, 45, 48)**
66	31-1N914	75V 1N914 Switching Diode **(CR1-4, 6-8, 15)**
67	31-1N4001	50V 1N4001 Silicon Rectifier Diode **(CR9-12)**

Figure 16 Asteroids Game PCB Assembly, continued Parts List

Item	*Part No.*	*Description (Reference Designations and Locations in Bold)*
68	31-1N756A	8.2V, ±5%, 1N756A Zener Diode **(CR13, 14)**
71	33-2N3906	Type 2N3906 PNP Switching and Amplifying Transistor **(Q1-5, 7, 10, 16-17)**
72	34-2N3643	Type 2N3643 NPN Silicon Transistor **(Q6)**
73	34-2N3904	Type 2N3904 NPN 60V 1-Watt Transistor **(Q8, 9)**
74	34-2N6044	Type 2N6044 Darlington NPN Transistor **(Q11-13)**
75	34-MPSA06S	Type MPSA06S NPN 80V 500ma Transistor **(Q14, 15)**
78	37-74LS00	Type 74LS00 Integrated Circuit **(N5, C6)**
79	37-74LS02	Type 74LS02 Integrated Circuit **(D6)**
80	37-7404	Type 7404 Integrated Circuit **(H10)**
81	37-74LS04	Type 74LS04 Integrated Circuit **(B5, L5)**
82	37-7406	Type 7406 Integrated Circuit **(N9)**
83	37-74LS08	Type 74LS08 Integrated Circuit **(E6, K6, R7, B8)**
84	37-74LS10	Type 74LS10 Integrated Circuit **(A8)**
85	37-74LS14	Type 74LS14 Integrated Circuit **(B6)**
86	37-74LS20	Type 74LS20 Integrated Circuit **(E5)**
87	37-74LS32	Type 74LS32 Integrated Circuit **(M5, N6, B9)**
88	37-74LS42	Type 74LS42 Integrated Circuit **(L6, E7, E8)**
89	37-74LS74	Type 74LS74 Integrated Circuit **(D4, A7, R8)**
91	37-74LS83	Type 74LS83 Integrated Circuit **(M6)**
92	37-74LS86	Type 74LS86 Integrated Circuit **(P5)**
93	37-7497	Type 7497 Integrated Circuit **(F8, H8, J8, K8)**
94	37-74LS109	Type 74LS109 Integrated Circuit **(A9)**
95	37-74LS139	Type 74LS139 Integrated Circuit **(L3, E4)**
97	37-74LS157	Type 74LS157 Integrated Circuit **(F3, H3, J3, K3, F6, A10, B/C10, F/H10, C10, D/E10, E10)**
98	37-74LS161	Type 74LS161 Integrated Circuit **(C5, P8, B7, C7, D7)**
99	37-74LS164	Type 74LS164 Integrated Circuit **(K9, P9, R9)**
101	37-74LS174	Type 74LS174 Integrated Circuit **(N7, P7, D8, N11, F10)**
102	37-74LS175	Type 74LS175 Integrated Circuit **(M7)**
103	37-74191	Type 74191 Integrated Circuit **(C4)**
104	37-74LS191	Type 74LS191 Integrated Circuit **(K5, C9, D9, E9, F9, H9, J9)**
105	37-74LS193	Type 74LS193 Integrated Circuit **(F5, H5, J5)**
106	37-74LS244	Type 74LS244 Integrated Circuit **(B2, C2)**
107	37-74LS245	Type 74LS245 Integrated Circuit **(R2, E3)**
	OR	
108	37-8304B	Type 8304B Integrated Circuit—substitute for item 107 **(P2, E3)**
110	37-74LS251	Type 74LS251 Integrated Circuit **(J10, L10)**
111	37-74LS253	Type 74LS253 Integrated Circuit **(P6)**
112	37-74LS259	Type 74LS259 Integrated Circuit (M10)
113	37-74LS273	Type 74LS273 Integrated Circuit **(F7, H7, J7, K7)**
114	37-74LS367	Type 74LS367 Integrated Circuit **(H6, J6)**
116	37-74LS393	Type 74LS393 Integrated Circuit **(B4, D5)**
117	37-74LS374	Type 74LS374 Integrated Circuit **(B10, D10)**
	OR	
118	37-74LS273	Type 74LS273 Integrated Circuit—substitute for item 117
119	37-74LS670	Type 74LS670 Integrated Circuit **(F4, H4, J4)**
	OR	
120	37-74LS170	Type 74LS170 Integrated Circuit—substitute for item 119
121	37-9316	Type 9316 Integrated Circuit **(C4)**
122	37-LM324	Type LM324 Integrated Circuit **(L8, P11)**
124	37-555	Type 555 Timer Integrated Circuit **(M8, N8, L9, R10)**
125	37-566	Type 566 Function Generator Integrated Circuit **(P10)**
127	37-4016B	Type 4016B Integrated Circuit **(M9, N10, R11, B12, D12)**
128	37-TL082CP	Type TL082CP Integrated Circuit **(A12, C12)**
129	37-AD561J	Type AD561J Integrated Circuit **(B11, D11)**
130	137108-001	Operational Amplifier Integrated Circuit **(B/C12, E12)**

Figure 16 Asteroids Game PCB Assembly, continued Parts List

Item	*Part No.*	*Description (Reference Designations and Locations in Bold)*
132	37-7805	+5V Voltage Regulator
133	37-7812	+12V Voltage Regulator
134	37-7815	+15V Voltage Regulator
135	37-7915	−15V Voltage Regulator
137	38-MV5053	Type MV5053 Light-Emitting Diode **(CR5)**
139	41-3003	100 uH, ±5%, Hot-Molded Plastic Fixed R.F. Choke **(L1-13)**
141	62-001	SPST Pushbutton Switch **(A6)**
142	66-118P1T	8-Station Single-Throw, Dual-Inline-Package Bit Switch **(R6)**
143	66-114P1T	4-Station Single-Throw, Dual-Inline-Package Bit Switch **(M12)**
144	79-42C40	40-Contact Medium-Insertion-Force Integrated Circuit Socket **(C3)**
146	81-4302	Nylon Snap-In Fastener
148	020670-01	Test Point
150	90-102	12.096 MHz, ±.005%, Crystal **(Y1)**
151	90-6013	Microprocessor **(C3)**
152	90-7033	Random-Access Memory **(D2, E2, M4, N4, P4, R4)**
155	034602-01	Programmable Read-Only Memory **(C8)**
157	035127-01	Read-Only Memory **(N/P3)**
		OR THE FOLLOWING TWO ITEMS:
159	035129-01	Programmable Read-Only Memory, MSB—substitute for half of item 157 **(K4)**
159	035130-01	Programmable Read-Only Memory, LSB—substitute for half of item 157 **(L4)**

For remaining memory components and their part numbers, see listing below.

Memory Components and Their Equivalents (Locations Shown in Bold)

-01 P.C. Boards (PROMs)	**Alternate -01 P.C. Boards (PROMs)**	**-02 P.C. Boards (ROMs)**
035131-01 **J2**	035150-01 **J2**	035143-01 **C1**
035132-01 **N2**		
035137-01 **K1**	035153-01 **K1**	
035138-01 **N1**		
035133-01 **H2**	035151-01 **H2**	035144-01 **D/E1**
035134-01 **M2**		
035139-01 **J1**	035154-01 **J1**	
035140-01 **M1**		
035135-01 **F2**	035152-01 **F2**	035145-01 **F1**
035136-01 **L2**		
035141-01 **H1**	035155-01 **H1**	
035142-01 **L1**		

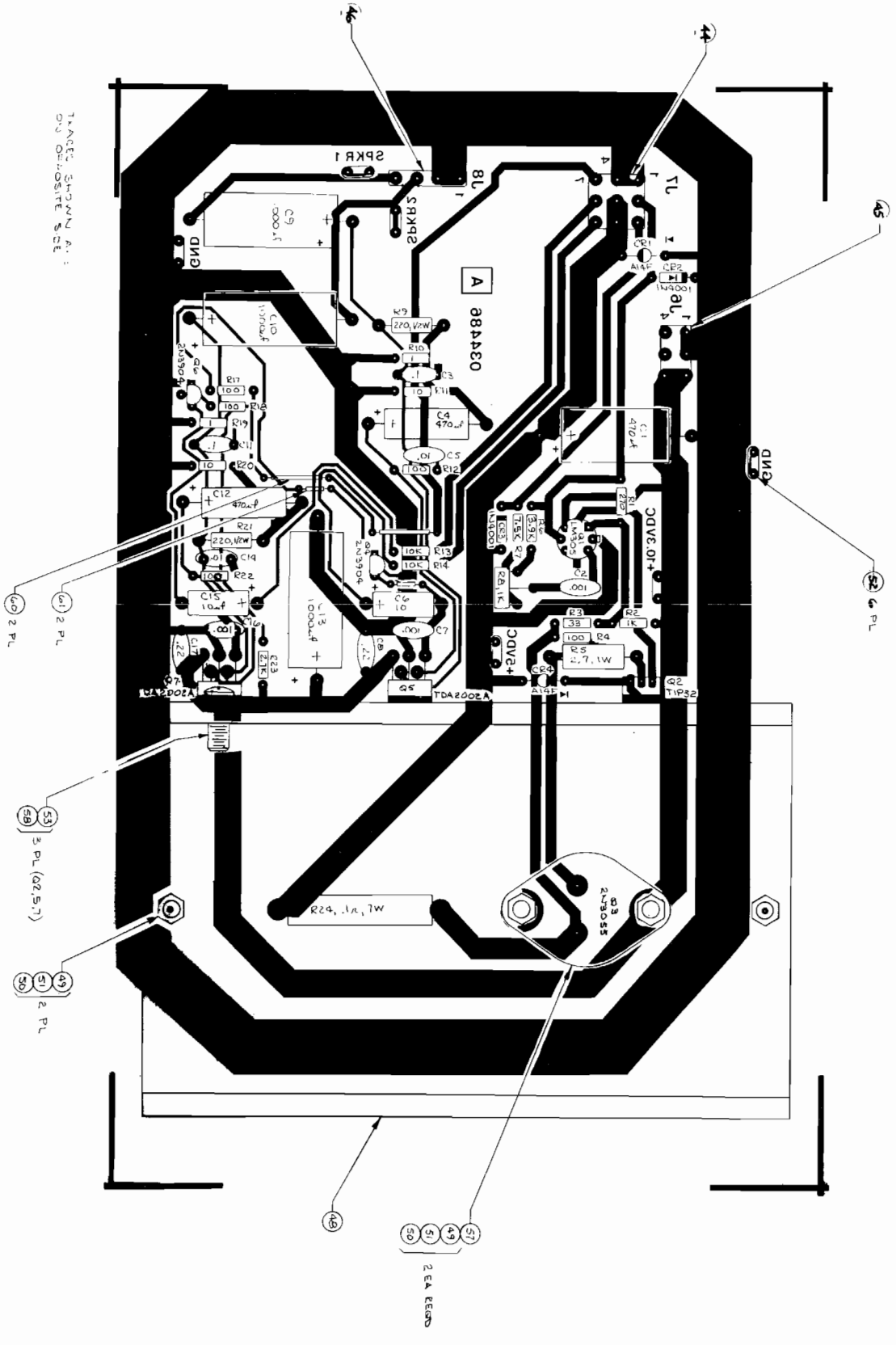

NOTICE TO ALL PERSONS RECEIVING THIS DRAWING
CONFIDENTIAL Reproduction forbidden without the specific written permission of Atari, Inc., Sunnyvale, California. This drawing is only conditionally issued, and neither receipt nor possession thereof confers or transfers any right in, or license to use, the subject matter of the drawing or any design or technical information shown thereon, nor any right to reproduce this drawing or any part thereof, except for manufacture by vendors of Atari, Incorporated and for manufacture under the corporation's written license, no right to reproduce this drawing is granted or the subject matter thereof unless by written agreement with or written permission from the corporation

Figure 17 Regulator/Audio PCB Assembly A034485-01 D

Figure 17 Regulator/Audio PCB Assembly Parts List

Item	Part No.	Qty.	Description (Ref. Designations in Bold)
2	110000-010	2	1 Ohm, ± 5%, ¼W Resistor **(R10, 19)**
3	110000-100	2	10 Ohm, ± 5%, ¼W Resistor **(R11, 20)**
4	110000-330	1	33 Ohm, ± 5%, ¼W Resistor **(R3)**
5	110000-101	5	100 Ohm, ± 5%, ¼W Resistor **(R4, 12, 17, 18, 22)**
6	110000-271	1	270 Ohm, ± 5%, ¼W Resistor **(R1)**
7	110000-102	1	1K Ohm, ± 5%, ¼W Resistor **(R2)**
8	110000-272	1	2.7K Ohm, ± 5%, ¼W Resistor **(R23)**
9	110000-752	1	7.5K Ohm, ± 5%, ¼W Resistor **(R7)**
10	110000-103	2	10K Ohm, ± 5%, ¼W Resistor **(R13, 14)**
11	110000-392	1	3.9K Ohm, ± 5%, ¼W Resistor **(R6)**
13	110001-221	2	220 Ohm, ± 5%, ½W Resistor **(R9, 21)**
15	12-52P7	1	2.7 Ohm, ± 5%, 1W Resistor **(R5)**
16	19-100P1015	1	.1 Ohm, ± 3%, 7W Wirewound Resistor **(R24)**
17	19-315102	1	1K Ohm Vertical PCB-Mounting Cermet Trimpot, Bournes Series 3352V-1-1K **(R8)**
20	24-250106	2	10 uf Aluminum Electrolytic Fixed Axial-Lead 25V Capacitor **(C6, 15)**
22	24-250477	3	470 uf Aluminum Electrolytic Fixed Axial-Lead 25V Capacitor **(C1, 4, 12)**
23	24-250108	3	100 uf Aluminum Electrolytic Fixed Axial-Lead 25V Capacitor **(C9, 10, 13)**
25	27-250103	2	.01 uf Ceramic-Disc 25V Radial-Lead Capacitor **(C5, C14)**
26	27-250104	2	.1 uf Ceramic-Disc 25V Radial-Lead Capacitor **(C3, C11)**
27	27-250224	2	.22 uf Ceramic-Disc 25V Radial-Lead Capacitor **(C8, 17)**
29	27-250102	3	.001 uf Ceramic-Disc 25V Radial-Lead Capacitor **(C2, 7, 16)**
31	31-A14F	2	50V 2.5A Miniature Axial-Lead High-Current Rectifier **(CR1, CR4)**
32	31-1N4001	2	50V Silicon Rectifier 1N4001 Diode **(CR2-3)**
34	33-TIP32	1	PNP Power Transistor, Type TIP32 **(Q2)**
35	34-2N3055	1	NPN Silicon Transistor, Type 2N3055 **Q3)**
36	34-2N3904	2	NPN Silicon Transistor, Type 2N3904 **(Q4, 6)**
38	37-LM305	1	5V Linear Voltage Regulator **(Q1)**
39	37-TDA2002A	2	Type TDA2002A 8W Linear Audio Amplifier Integrated Circuit **(Q5, 7)**
44	79-58008	1	9-Position Connector Receptacle **(J7)**
45	79-58092	1	6-Position Connector Receptacle **(J6)**
46	79-58059	1	4-Position Connector Receptacle **(J8)**
47	79-20230	19	Female PCB-Mounting Terminal
48	034531-01	1	Heat Sink
49	72-1608C	4	#6-32 × ½" Cross-Recessed Pan-Head Corrosion-Resistant Steel Machine Screw
50	75-99516	7	#6-32 Nut/Washer Assembly
51	75-056	7	#6 Internal-Tooth Steel Lock Washer
52	020670-01	6	Test Point
53	75-F60805	3	#6-32 × ½" Binder-Head Nylon Screw
57	78-16008	1	Thermally Conductive Compound for the 2N3055
58	78-16014	3	Thermally Conductive Compound for TDA2002A and TIP32
60	52-003	2	Teflon-Insulated Solder-Plated Solid Copper PCB-Mounting Jumper Wire with .6" Centers
61	52-004	2	Teflon-Insulated Solder-Plated Solid Copper PCB-Mounting Jumper Wire with .3" Centers

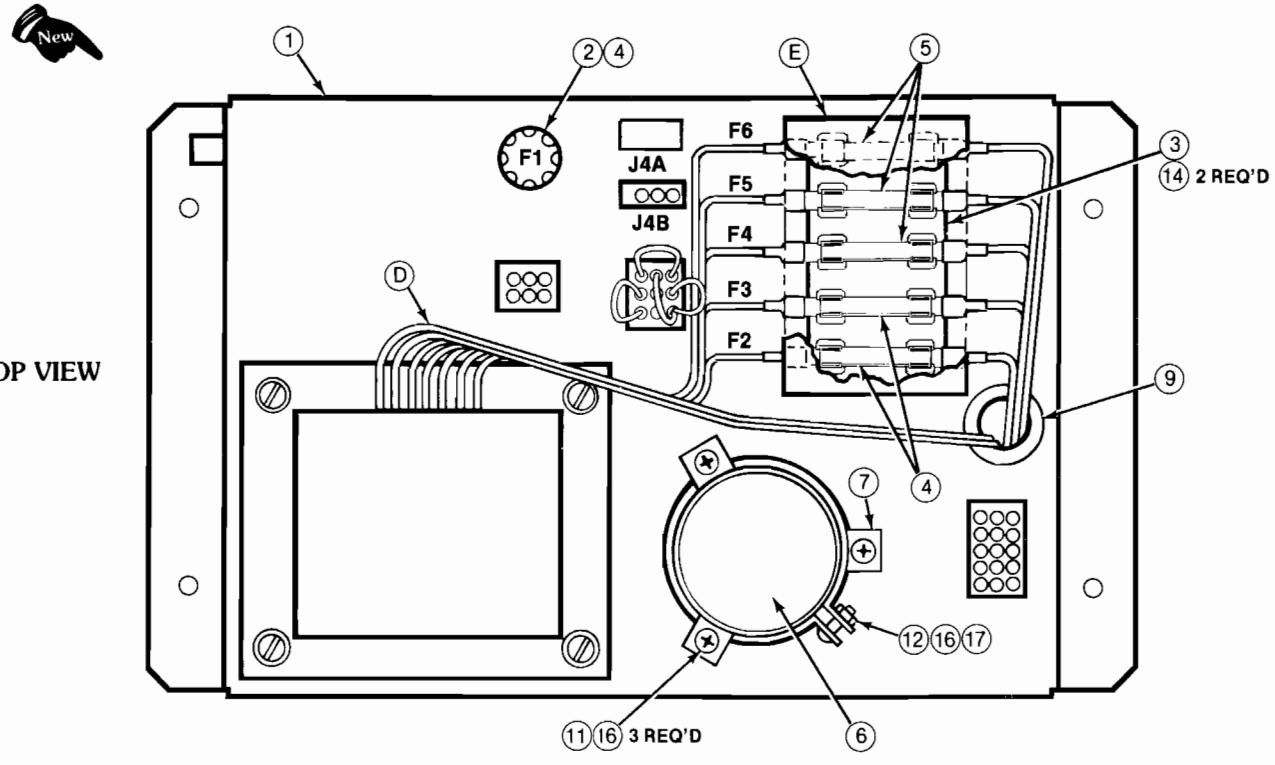

NOTE:
The four available voltage selection plugs are listed in Figure 14, Final Assembly.

NOTICE TO ALL PERSONS RECEIVING THIS DRAWING CONFIDENTIAL: Reproduction forbidden without the specific written permission of Atari, Inc., Sunnyvale, California. This drawing is only conditionally issued, and neither receipt nor possession thereof confers or transfers any right in, or license to use, the subject matter of the drawing or any design or technical information shown thereon, nor any right to reproduce this drawing or any part thereof, except for manufacture by vendors of Atari, Incorporated and for manufacture under the corporation's written license, no right to reproduce this drawing is granted or the subject matter thereof unless by written agreement with or written permission from the corporation.

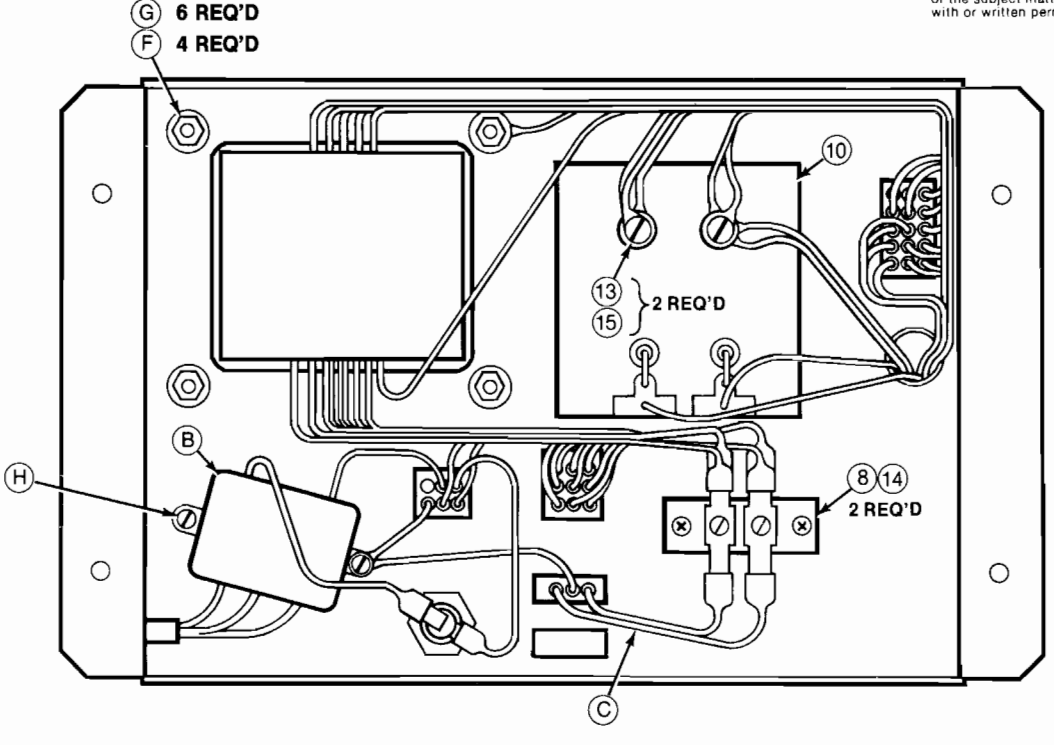

Figure 18 Power Supply Assembly for X-Y Games
A034561-01 D

Figure 18 Power Supply Assembly for X-Y Games Parts List



Item	*Part No.*	*Qty.*	*Description*
A	A034955-01	1	Power Supply Sub-Assembly, Rev. A, consisting of the following 17 items:
1	034482-01	1	Base for Power Supply Chassis
2	79-4411006	1	Panel-Mounting Non-Indicating 3AG Cartridge-Type Fuse Post
3	79-3206	1	5-Position 3AG Fuse Block with ¼" Quick-Disconnect Terminals
4	46-2017002	3	7-Amp. 250V 3AG Slow-Blow Glass Cartridge-Type Fuse
5	46-2013002	3	3-Amp. 250V 3AG Slow-Blow Glass Cartridge-Type Fuse
6	29-053	1	26,000 uf 15V Electrolytic Capacitor
7	78-70501SC	1	2" Diameter Capacitor Mounting Bracket
8	79-15021001	1	2-Circuit Single-Row Terminal Block
9	78-2708	1	Nylon Type 6/6 Hole Bushing with 5/8" Inside Diameter × 55/64" Outside Diameter × ¼" Thick
10	A006555-01	1	Rectifier Printed Circuit Board Assembly
11	72-HA4804S	3	#8-32 × ¼" Cross-Recessed Pan-Head Zinc-Plated Steel Thread-Rolling Tri-Fluted "Taptite" Screw
12	72-HA4812S	1	#8-32 × ¼" Cross-Recessed Pan-Head Zinc-Plated Steel Thread-Rolling Tri-Fluted "Taptite" Screw
13	72-1008F	2	#10-32 × ½" Cross-Recessed Pan-Head Zinc-Plated Steel Thread-Rolling Tri-Fluted "Taptite" Screw
14	72-HA4606S	4	#6-32 × 3/8" Cross-Recessed Pan-Head Zinc-Plated Steel Thread-Rolling Tri-Fluted "Taptite" Screw
15	75-010S	2	#10 Flat Plain SAE-Standard Zinc-Plated Steel Washer
16	75-018S	4	#8 Flat Plain SAE-Standard Zinc-Plated Steel Washer
17	75-99518	1	#8-32 Nut/Washer Assembly
B	A034630-01	1	RFI Filter Assembly
C	A034629-01	2	A.C. Harness Assembly
D	A034623-02	1	Power Supply Harness Assembly (for X-Y Games)
E	034544-01	1	Fuse Block Cover
F	75-018S	4	#8 Flat Plain SAE-Standard Zinc-Plated Steel Washer
G	75-99518	6	#8-32 Nut/Washer Assembly
H	72-HA4812S	2	#8-32 × 3/4" Cross-Recessed Pan-Head Zinc-Plated Steel Thread-Rolling Tri-Fluted "Taptite" Screw

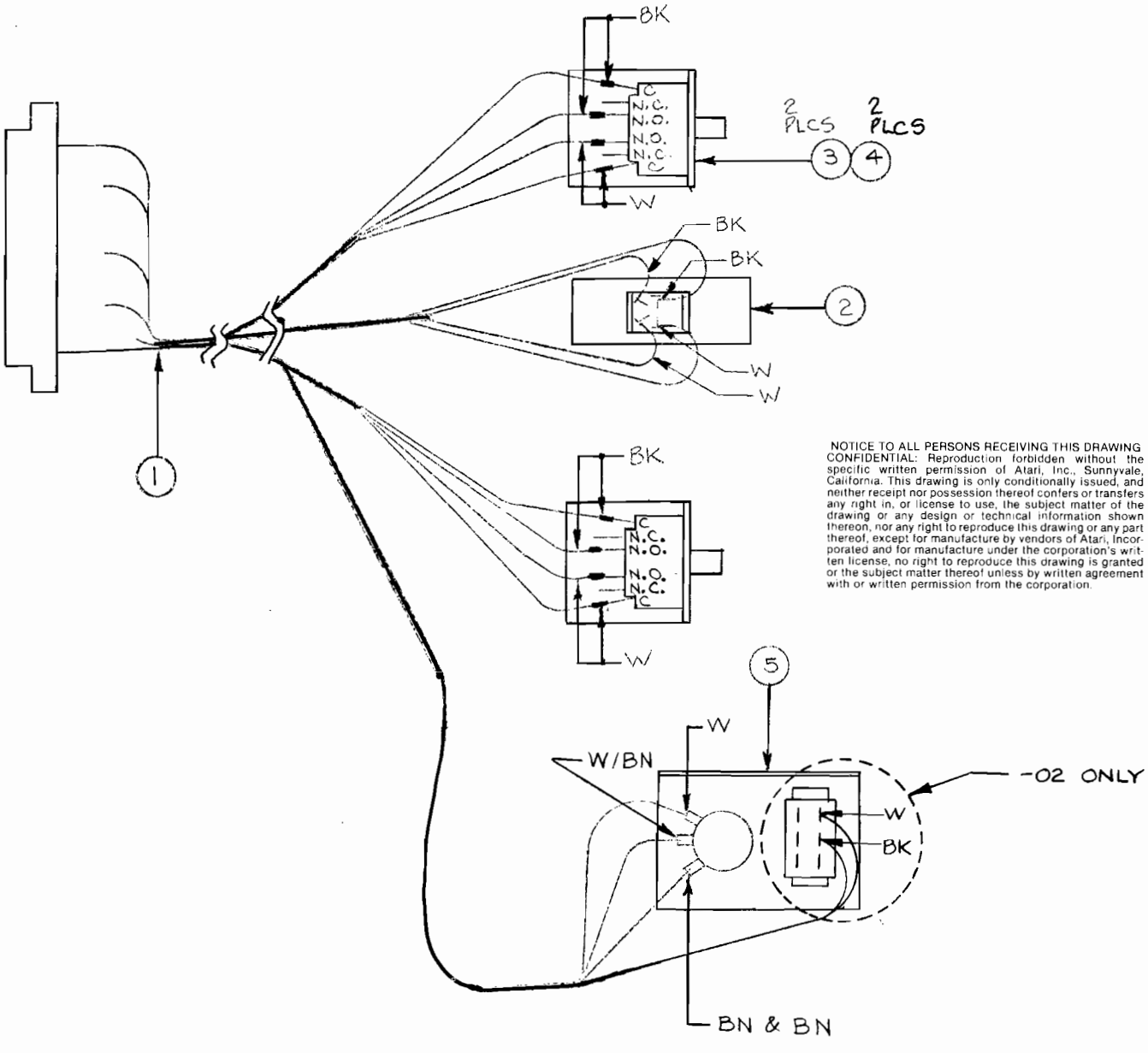

NOTICE TO ALL PERSONS RECEIVING THIS DRAWING CONFIDENTIAL: Reproduction forbidden without the specific written permission of Atari, Inc., Sunnyvale, California. This drawing is only conditionally issued, and neither receipt nor possession thereof confers or transfers any right in, or license to use, the subject matter of the drawing or any design or technical information shown thereon, nor any right to reproduce this drawing or any part thereof, except for manufacture by vendors of Atari, Incorporated and for manufacture under the corporation's written license, no right to reproduce this drawing is granted or the subject matter thereof unless by written agreement with or written permission from the corporation.

Figure 19 Main Harness and Component Assembly A035158-02 A

Item	*Part No.*	*Description*
1	A035157-01	Main Harness Assembly
2	A034631-01	On/Off Switch Assembly
3	68-002	Interlock Switch (2 per game)
4	000268-02	Interlock Switch Mounting Bracket
5	A030169-01	Volume Control/Test Switch/Bracket Assembly

NOTICE TO ALL PERSONS RECEIVING THIS DRAWING CONFIDENTIAL: Reproduction forbidden without the specific written permission of Atari, Inc., Sunnyvale, California. This drawing is only conditionally issued, and neither receipt nor possession thereof confers or transfers any right in, or license to use, the subject matter of the drawing or any design or technical information shown thereon, nor any right to reproduce this drawing or any part thereof, except for manufacture by vendors of Atari, Incorporated and for manufacture under the corporation's written license, no right to reproduce this drawing is granted or the subject matter thereof unless by written agreement with or written permission from the corporation.

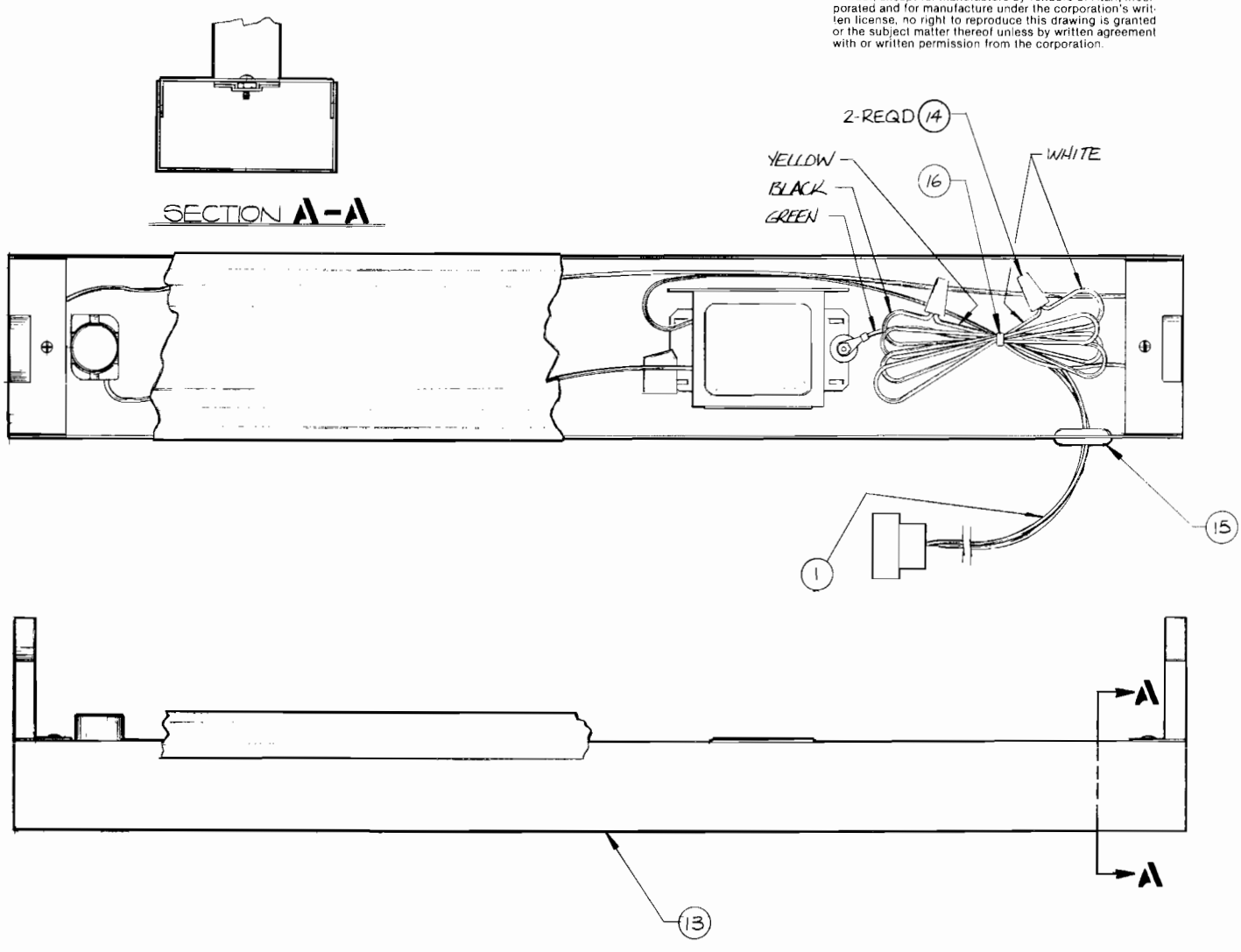

Figure 20 Fluorescent Light Assembly A034752-01 A

Item	*Part No.*	*Description*
1	A005493-01	Fluorescent Light Harness
13	93-113	18" Fluorescent Lamp Fixture with Starter
14	79-561816	Spring Connector Wire Nut for 16- to 18-Guage Wires
15	78-2652	Rubber Grommet with 5/8" Inside Diameter × 1 1/8" Outside Diameter × 5/16" Thick—for 7/8" Diameter Sheet-Metal Holes

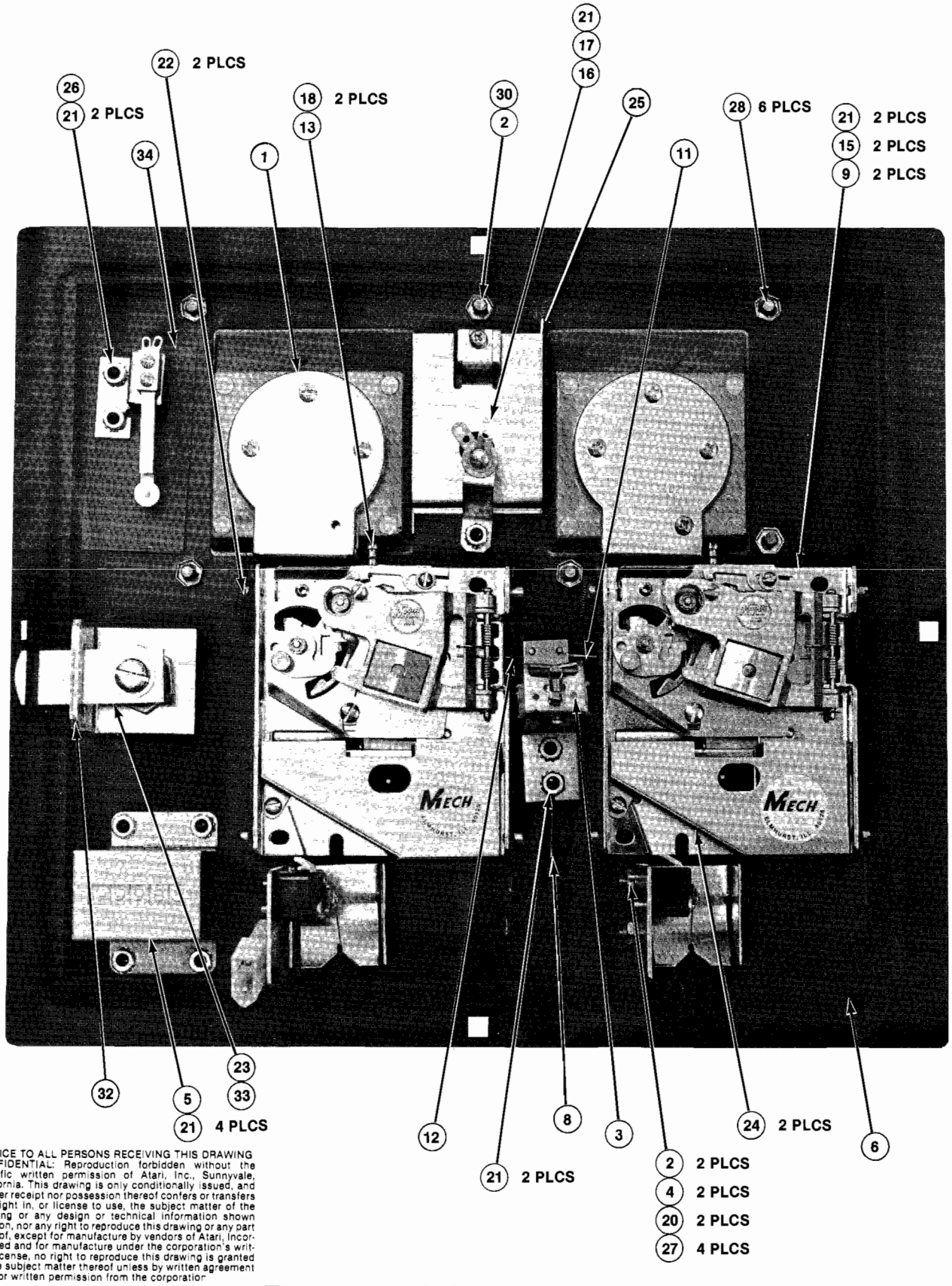

NOTICE TO ALL PERSONS RECEIVING THIS DRAWING CONFIDENTIAL: Reproduction forbidden without the specific written permission of Atari, Inc., Sunnyvale, California. This drawing is only conditionally issued, and neither receipt nor possession thereof confers or transfers any right in, or license to use, the subject matter of the drawing or any design or technical information shown thereon, nor any right to reproduce this drawing or any part thereof, except for manufacture by vendors of Atari, Incorporated and for manufacture under the corporation's written license, no right to reproduce this drawing is granted or the subject matter thereof unless by written agreement with or written permission from the corporation

Figure 21 Coin Door Assembly A006794-16 thru -28 K

Figure 21 Coin Door Assembly Parts List

Item	Part No.	Qty.	Description
1	A007637-16	One of these used per coin door	Front Bezel Assy.—Used only on -16 Coin Door Assy. (25¢)
	A007637-17		Front Bezel Assy.—Used only on -17 Coin Door Assy. (5 Fr)
	A007637-18		Front Bezel Assy.—Used only on -18 Coin Door Assy. (1 DM)
	A007637-19		Front Bezel Assy.—Used only on -19 Coin Door Assy. (1 Kr)
	A007637-20		Front Bezel Assy.—Used only on -20 Coin Door Assy. (100 Y)
	A007637-21		Front Bezel Assy.—Used only on -21 Coin Door Assy. (10 pence)
	A007637-22		Front Bezel Assy.—Used only on -22 Coin Door Assy. (20¢ Australian)
	A007637-23		Front Bezel Assy.—Used only on -23 Coin Door Assy. (2 DM/1 DM)
	A007637-24		Front Bezel Assy.—Used only on -24 Coin Door Assy. (1 Fr)
	A007637-25		Front Bezel Assy.—Used only on -25 Coin Door Assy. (1 Baht)
	A007637-26		Front Bezel Assy.—Used only on -26 Coin Door Assy. (1 DM/5 DM)
	A007637-27		Front Bezel Assy.—Used only on -27 Coin Door Assy. (100 Lire)
	A007637-28		Front Bezel Assy.—Used only on -28 Coin Door Assy. (25¢/U.S. $1 coin)
	For breakdown of Front Bezel Assy., see Figure 22		
2	72-HA4608C	3	#6-32 × ½" Cross-Recessed Pan-Head Cadmium-Plated Steel Tri-Fluted Thread-Rolling Screw
3	A030362-01	1	Coin Lockout Assembly
4	A030250-01	2	Coin Switch Assembly
5	A002465-01	1	Coin Counter Assembly
6	004320-01	1	Coin Door Weldment
8	004344-01	1	Key Loop
9	004340-01	2	Spring Return (used only on German DM coin doors)
10	004337-01	2	Bracket for Lock-Out Wires
11	004338-01	1	Right-Hand Lock-Out Wire
12	004336-01	1	Left-Hand Lock-Out Wire
13	004326-01	2	Scavenger Button
15	006904-01	2	Spacer (used only on German DM coin doors)
16	030257-01	1	Lamp Socket
17	70-11-47	1	NEMA #47 Incandescent Miniature Bayonet-Base Lamp
18	73-3008	2	Carbon Spring Steel External Retaining Ring, for ¼" Diameter Shaft
20	72-HA4604C	2	#6-32 × ¼" Cross-Recessed Pan-Head Cadmium-Plated Steel Tri-Fluted Thread-Rolling Screw
21	75-99516	13*	#6-32 Steel Nut and Spring Washer Assembly *Quantity of 15 is used on the German DM coin doors
22	008629-01	2	Spring
23	71-2118	1	Cam Lock, Hudson #CR73A045S
24	71-1225CU	2 of any of these used per coin door, as required	Coin Mechanism for American Quarter
	71-1205FF		Coin Mechanism for French 5-Francs Coin
	71-1201MG		Coin Mechanism for German 1-Mark Coin
	71-1201KS		Coin Mechanism for Swedish 1-Krona Coin
	71-12100YJ		Coin Mechanism for Japanese 100-Yen Coin
	71-1210PE		Coin Mechanism for English 10-Pence Coin
	71-1220CA		Coin Mechanism for Australian 20-Cent Coin
	71-1202MG		Coin Mechanism for German 2-Mark Coin
	71-1201FF		Coin Mechanism for French 1-Franc Coin
	71-1201BT		Coin Mechanism for Thai 1-Baht Coin
	71-1205MG		Coin Mechanism for German 5-Mark Coin
	71-12100LI		Coin Mechanism for Italian 100-Lire Coin
	71-1201ADU		Coin Mechanism for U.S. $1.00 Coin
25	007753-01	1	Anti-Probe Plate
26	A007638-01	1	Slam Switch Assembly
27	75-036S	4	#6 Flat Plain SAE-Standard Zinc-Plated Steel Washer
28	73-3025	6	Carbon Spring Steel External Retaining Ring, for 0.184" Diameter Shaft
30	75-056	1	#6 Internal-Tooth Zinc-Plated Steel Lock Washer
32	033368-01	1	Lock Bracket
33	033369-01	1	Lock Arm
34	033371-01	1	Slam Switch Insulator

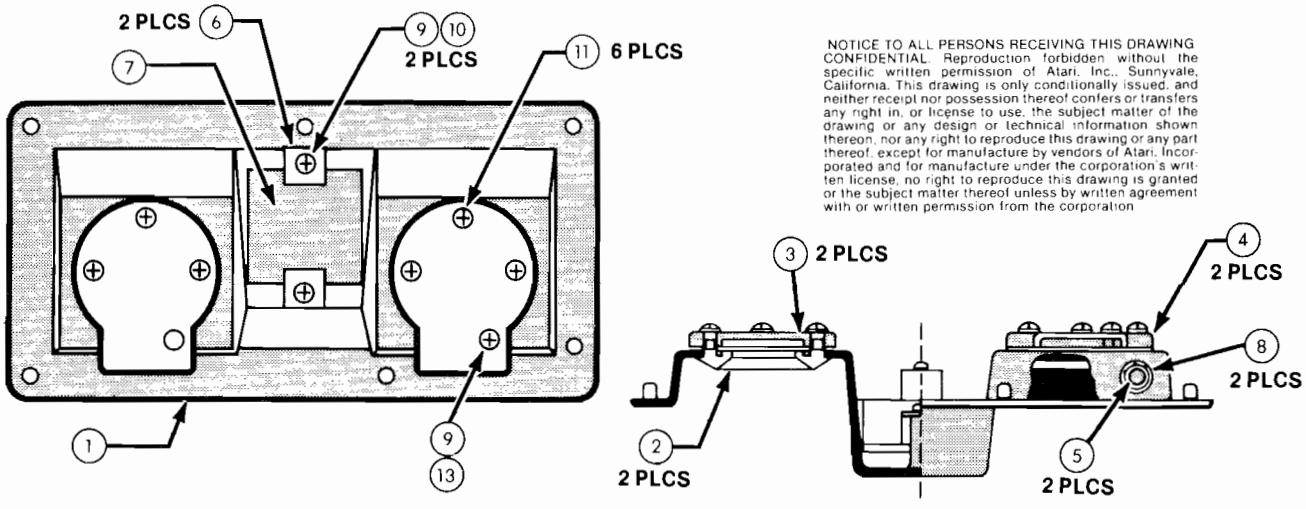

Figure 22 Front Bezel Assembly A007637-16 thru -28 J

Parts List

Item	*Part No.*	*Qty.*	*Description*
1	004328-02	1	Bezel
2	004330-02	↑ Two of these used per coin door	Ring for American Quarter
	004330-02		Ring for French 5-Franc Coin
	009153-02		Ring for German 1-Deutschmark Coin
	004330-02		Ring for Swedish 1-Krona Coin
	009153-02		Ring for Japanese 100-Yen Coin
	007752-02		Ring for English 10-Pence Coin
	007752-02		Ring for Australian 20 Coin
	030677-02		Ring for German 2-Deutschmark and U.S. $1.00 Coins
	009153-02		Ring for French 1-Franc Coin
	030677-02		Ring for Thai 1-Baht Coin
	007752-02		Ring for German 5-Deutschmark Coin
	030677-02	↓	Ring for Italian 100-Lire Coin
3	004331-02	2	Coin Shield
4	004332-02	2	Primary Coin Chute
5	004327-01	2	Scavenger Button Bearing
6	004329-01	2	Price Plate Clamp
7	004343-01	↑ One of these used per coin door	Price Plate—*25¢*
	004343-06		Price Plate—*5 FR*
	004343-04		Price Plate—*1 DM*
	004343-03		Price Plate—*1 KR*
	004343-05		Price Plate—*¥ 100*
	004343-02		Price Plate—*10 P*
	004343-07		Price Plate—*20¢ Australian*
	004343-08		Price Plate—*Einwurf 2 DM/1 DM*
	004343-09		Price Plate—*1 FR*
7	004343-10		Price Plate—*1 Baht*
	004343-11		Price Plate—*Einwurf 1 DM/5 DM*
	004343-12		Price Plate—*100 Lire*
	004343-13	↓	Price Plate—*25¢/$1*
8	73-3009	2	Carbon Spring Steel External Retaining Ring, for 3/8" Shaft Diameter
9	72-1604S	3	#6-32 × ¼" Cross-Recessed Pan-Head Cadmium-Plated Steel Machine Screw
10	75-046	2	#6 Corrosion-Resistant Steel Split Lock Washer
11	72-CL606	6	#6-32 × 3/8" Phillips Pan-Head Steel "Rolok" Self-Threading, Thread-Rolling Machine Screw
13	75-056	1	#6 Internal-Tooth Zinc-Plated Steel Lock Washer

NOTICE TO ALL PERSONS RECEIVING THIS DRAWING CONFIDENTIAL: Reproduction forbidden without the specific written permission of Atari, Inc., Sunnyvale, California. This drawing is only conditionally issued, and neither receipt nor possession thereof confers or transfers any right in, or license to use, the subject matter of the drawing or any design or technical information shown thereon, nor any right to reproduce this drawing or any part thereof, except for manufacture by vendors of Atari, Incorporated and for manufacture under the corporation's written license, no right to reproduce this drawing is granted or the subject matter thereof unless by written agreement with or written permission from the corporation

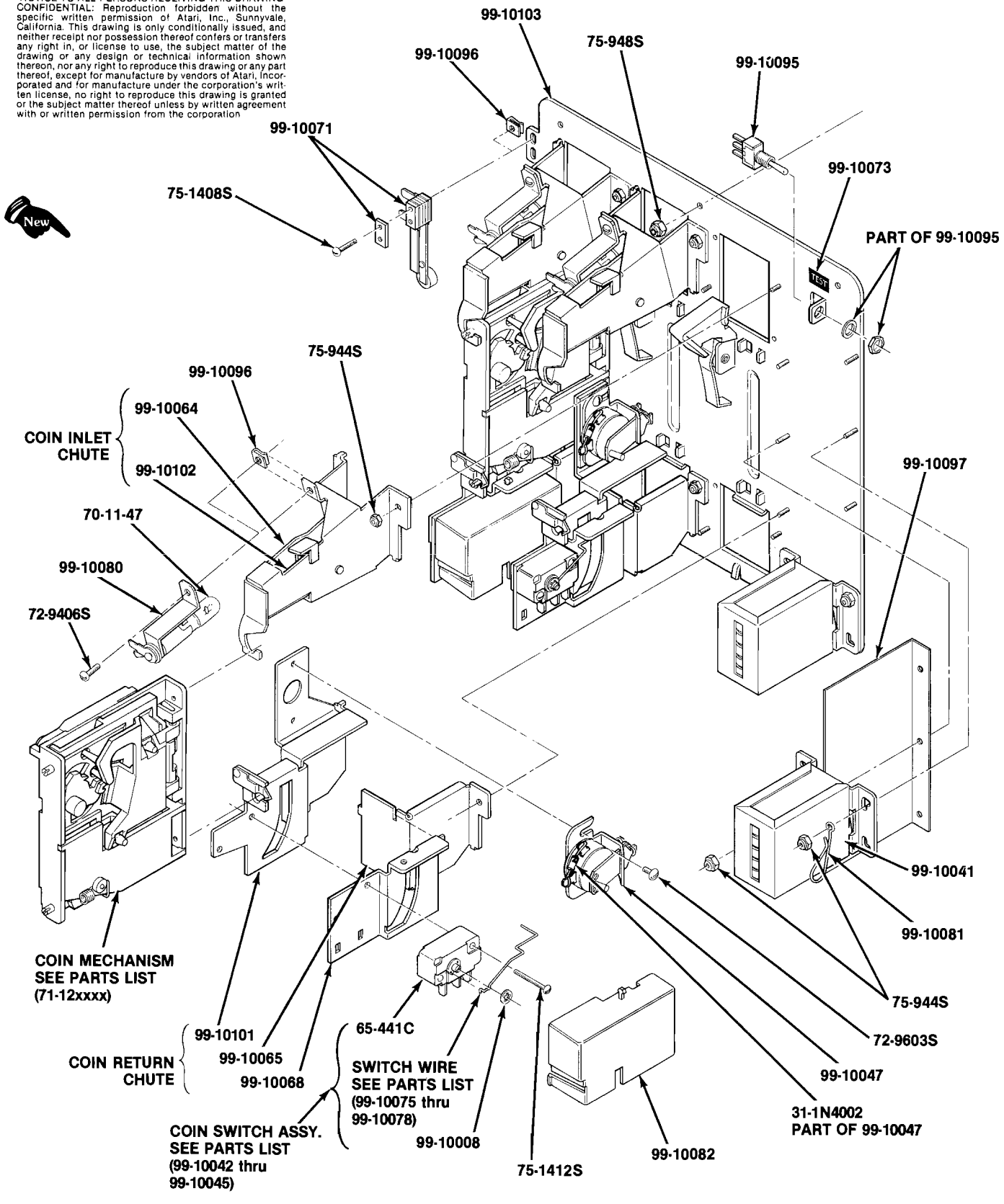

Figure 23 New Coin Door 71-10xxxx

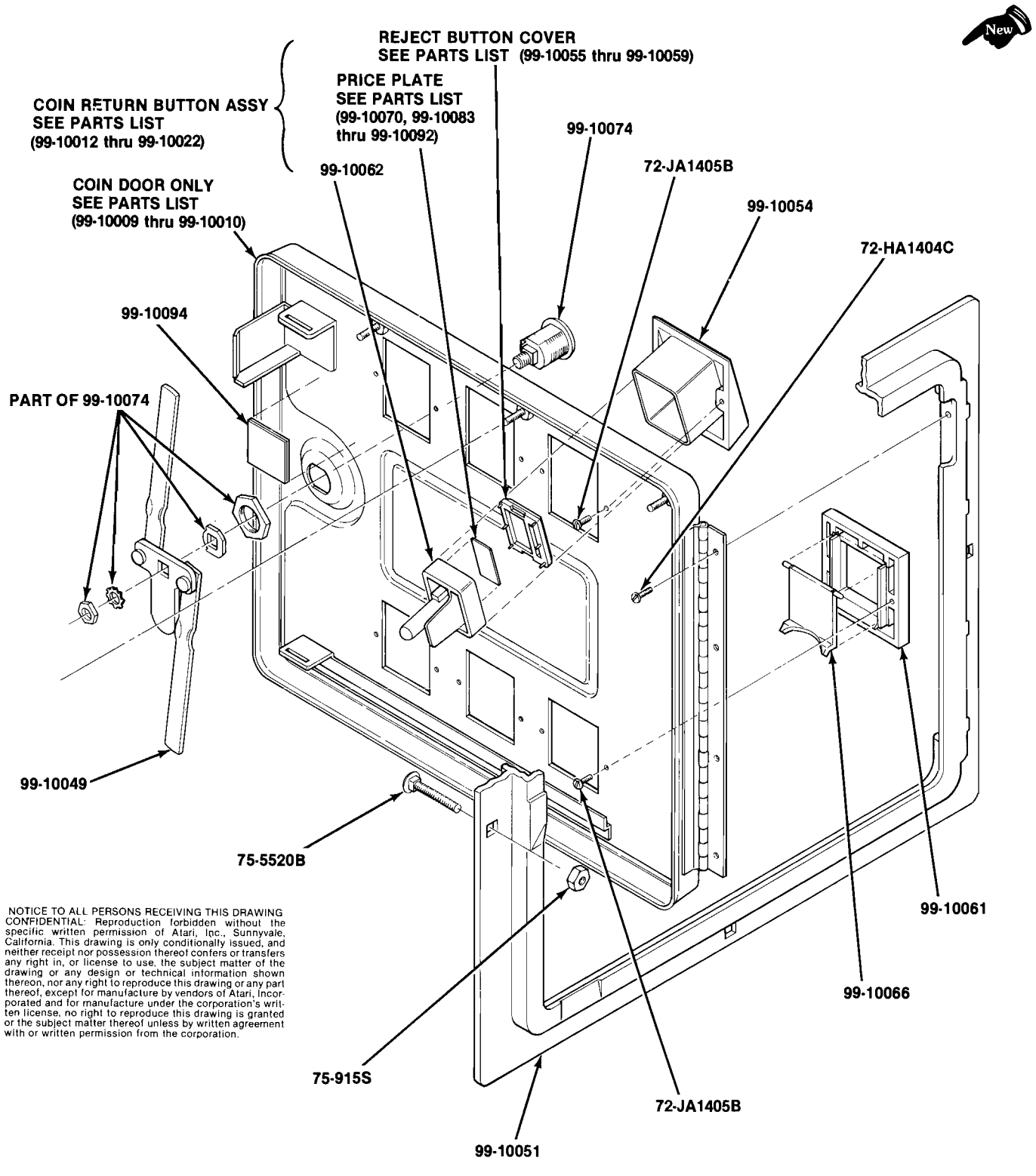

Figure 23 New Coin Door 71-10xxxx

Figure 23 New Coin Door, continued
Parts List

Part No.	*Description*
31-1N4002	100V Silicon Rectifier 1N4002 Diode
65-441C	General-usage low-force miniature switch
70-11-47	Miniature bayonet-base incandescent lamp, type #47
71-1201ADU	U.S. $1.00 coin mechanism
71-1201FCH	Swiss 1 Fr coin mechanism
71-1201MG	German 1 DM coin mechanism
71-1202MG	German 2 DM coin mechanism
71-1205FB	Belgian 5 Fr coin mechanism
71-1205MG	German 5 DM coin mechanism
71-1210PE	U.K. 10 P coin mechanism
71-1220CA	Australian 20¢ coin mechanism
71-1225CU	U.S. 25¢ coin mechanism
71-12100LI	Italian 100 Lire coin mechanism
71-12100YJ	Japanese Y100 coin mechanism
72-HA1404C	#4x¼" Slotted pan-head thread-rolling tri-fluted "Taptite" cadmium-plated screw
72-JA1405B	#4x5/16" Slotted pan-head thread-rolling tri-fluted "Plastite" black screw
72-9406S	#4-40x3/8" Slotted truss-head steel machine screw
72-9603S	#6-32x3/16" Slotted truss-head steel machine screw
75-915S	#¼-20 Standard pattern cadmium-plated steel hex nut
75-918S	#8-32 Standard pattern cadmium-plated steel hex nut
75-944S	#4-40 Polymer self-locking steel hex nut
75-948S	#8-32 Polymer self-locking steel hex nut
75-1408S	#4-40x½" Slotted pan-head steel machine screw
75-1412S	#4-40x¾" Slotted pan-head steel machine screw
75-5520B	#¼-20x1¼" Round-head square-neck steel bolt with black finish
99-10008	Switch wire retainer
99-10009	2-Mech coin door only
99-10010	3-Mech coin door only
99-10011	Inner panel
99-10012	U.S. 25¢ coin return button assembly
99-10013	U.S. $1.00 coin return button assembly
99-10014	German 1 DM coin return button assembly
99-10015	German 2 DM coin return button assembly
99-10016	German 5 DM coin return button assembly
99-10017	Belgian 5 Fr coin return button assembly
99-10018	Swiss 1 Fr coin return button assembly
99-10019	Japanese Y100 coin return button assembly
99-10020	U.K. 10 P coin return button assembly
99-10021	Australian 20¢ coin return button assembly
99-10022	Italian 100 Lire coin return button assembly

Figure 23 New Coin Door, continued
Parts List

Part No.	*Description*
99-10040	Coin inlet chute assembly
99-10041	Coin counter assembly
99-10042	Coin switch assembly for U.S. 25¢ and Belgian 5 Fr coins (silver wire)
99-10043	Coin switch assembly for German 1 DM, Swiss 1 Fr, and Japanese Y100 coins (black wire)
99-10044	Coin switch assembly for U.S. $1.00, German 2 DM, and Italian 100 Lire coins (gold wire)
99-10045	Coin switch assembly for German 5 DM, U.K. 10 P, and Australian 20¢ coins (green wire)
99-10047	Lockout coil assembly
99-10048	Coin door harness assembly
99-10049	Locking arm assembly
99-10051	Coin door frame
99-10054	Coin button housing
99-10055	Coin return button cover for Japanese Y100 coin
99-10056	Coin return button cover for German 1 DM and Swiss 1 Fr coins
99-10057	Coin return button cover for U.S. 25¢ and Belgian 5 Fr coins
99-10058	Coin return button cover for U.S. $1.00, German 2 DM, and Italian 100 Lire coins
99-10059	Coin return button cover for German 5 DM, U.K. 10 P, and Australian 20¢ coins
99-10061	Coin return bezel
99-10062	Coin return button
99-10063	Right half of coin inlet chute
99-10064	Left half of coin inlet chute
99-10065	Coin return box
99-10066	Coin return cover
99-10070	U.S. 25¢ price plate
99-10071	Slam switch assembly
99-10073	Test switch decal
99-10074	Lock assembly
99-10075	Black switch wire—for German 1DM, Swiss 1Fr and Japanese Y100 coins
99-10076	Silver switch wire—for U.S. 25¢ and Belgian 5Fr coins
99-10077	Gold switch wire—for U.S. $1.00, German 2DM and Italian 100 Lire coins
99-10078	Green switch wire—for German 5DM, U.K. 10P and Australian 20¢ coins
99-10080	Miniature bayonet-base lamp socket
99-10081	Wire key holder
99-10082	Switch cover
99-10083	U.S. $1.00 price plate
99-10084	German 1 DM price plate
99-10085	German 2 DM price plate
99-10086	German 5 DM price plate
99-10087	Belgian 5 Fr price plate
99-10088	Swiss 1 Fr price plate

Figure 23 New Coin Door, continued
Parts List

Part No.	*Description*
99-10089	Japanese Y100 price plate
99-10090	U.K. 10 P price plate
99-10091	Australian 20¢ price plate
99-10092	Italian 100 Lire price plate
99-10094	Fish paper insulation
99-10095	Toggle switch
99-10096	"U"-type fastener
99-10097	Fish paper insulation
99-10101	Coin inlet chute sub-assembly
99-10102	Switch and lockout coil bracket sub-assembly
99-10103	Inner panel with levers sub-assembly

YOUR COMMENTS, PLEASE!

Your comments will assist Atari in improving the usefulness of our publications. They are an important part of preparing for revisions of manuals and parts catalogs. No postage stamp is necessary if mailed in the U.S.A.

If you have any technical questions about certain Atari or Kee Games products, or are requesting additional publications, we will immediately forward your note to the appropriate person.

Page: Comments:

Fill in if you wish a reply:

Name _____ Firm _____

Address _____

City _____ State _____ Zip _____

☐ Distributor
☐ Operator
☐ Other _____

First fold

No Postage
Necessary
if mailed in
the United States

BUSINESS REPLY MAIL

FIRST CLASS PERMIT NO. 1004 SUNNYVALE, CA

POSTAGE WILL BE PAID BY ADDRESSEE

Atari, Inc.
Attn.: Field Service/Coin-Op Division
P. O. Box 427
Sunnyvale, California 94086

Cut along this line

Second fold

ATARI, INC.
P.O. BOX 427
SUNNYVALE, CA 94086

WARRANTY

Seller warrants that its printed circuit boards and parts thereon are free from defects in material and workmanship under normal use and service for a period of ninety (90) days from date of shipment. Seller warrants that its television monitors (in games supplied with monitors) are free from defects in material and workmanship under normal use and service for a period of thirty (30) days from date of shipment. None of the Seller's other products or parts thereof are warranted.

If the products described in this manual fail to conform to this warranty, Sellers' sole liability shall be, at its option, to repair, replace, or credit Buyer's account for such products which are returned to Seller during said warranty period, provided:

(a) Seller is promptly notified in writing upon discovery by Buyer that said products are defective;

(b) Such products are returned prepaid to Sellers' plant; and

(c) Seller's examination of said products discloses to Seller's satisfaction that such alleged defects existed and were not caused by accident, misuse, neglect, alteration, improper repair, installation or improper testing.

In no event shall Seller be liable for loss of profits, loss of use, incidental or consequential damages.

Except for any express warranty set forth in a written contract between Seller and Buyer which contract supersedes the terms of this order, this warranty is expressed in lieu of all other warranties expressed or implied, including the implied warranties of merchantability and fitness for a particular purpose, and of all other obligations or liabilities on the Seller's part, and it neither assumes nor authorizes any other person to assume for the Seller any other liabilities in connection with the sale of products under this order.

The use of any non-Atari parts may void your warranty, according to the terms of the warranty. The use of any non-Atari parts may also adversely affect the safety of your game and cause injury to yourself and others. Be very cautious in using non-Atari-supplied components with our games, in order to insure your safety.

Atari distributors are independent, being privately owned and operated. In their judgment they may sell parts or accessories other than Atari parts or accessories. Atari cannot be responsible for the quality, suitability or safety of any non-Atari part or any modification including labor which is perfomed by such distributor.

This document is and contains confidential trade secret information of Atari, Inc.

This document is loaned under confidential custody for the sole purpose of operation, maintenance or repair of Atari equipment and may not be used by or disclosed to any person for any other purpose whatever, and remains the property of Atari, Inc.

Neither it nor the information it contains may be reproduced, used, or disclosed to persons not having a need to know consistent with the purpose of the loan, without written consent of Atari, Inc.



ATARI INC
1265 BORREGAS AVENUE
P.O. BOX 427
SUNNYVALE, CALIFORNIA 94086
408/745-2000 • TELEX 35-7488
A Warner Communications Company