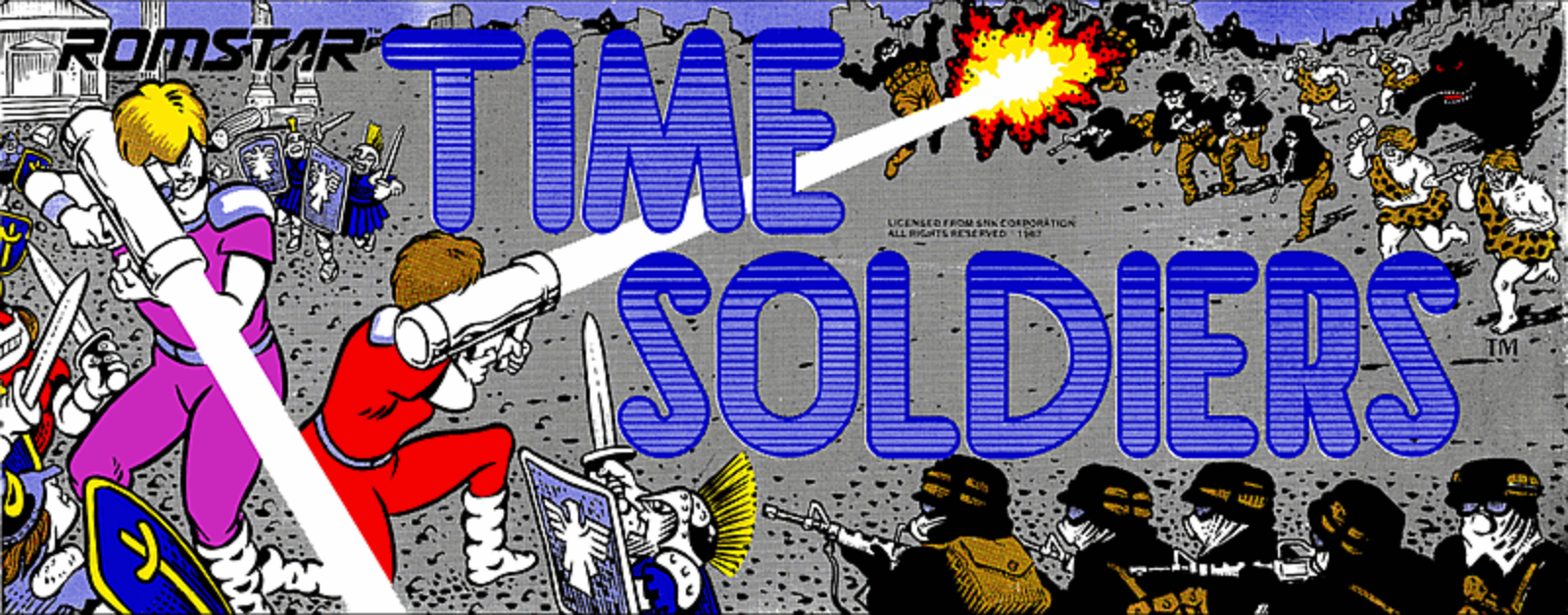
ROMSTAR
TIME SOLDIERS
TM
LICENSED FROM SNK CORPORATION
ALL RIGHTS RESERVED ©1987

GAME PLAY

* YOU MUST SAVE 5 COMRADES WHO HAVE BEEN KIDNAPPED. TO SAVE YOUR COMRADES YOU MUST ENTER THE TIME TUNNEL AND DESTROY THE ENEMY.
* YOU MUST DESTROY ALL MONSTERS TO REACH THE TIME TUNNEL.
* YOU CAN ONLY USE YOUR HYPER-WEAPON WHEN YOU PICK UP EXTRA FIREPOWER.
* EACH WEAPON CAN BECOME MORE POWERFUL WHEN YOU PICK UP MORE OF THEM.

TIME SOLDIERS

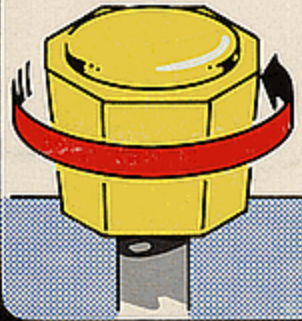

CONTROL THE HERO'S DIRECTION WITH 8-WAY JOYSTICK AND DIRECT MACHINE GUN FIRE BY ROTATING JOYSTICK KNOB

USE FIRE BUTTON FOR MACHINE GUN



PRESS WEAPON BUTTON TO USE EXTRA WEAPONS ACQUIRED DURING GAME PLAY



WEAPONS	X 1	X 2	X 3
	5 WAY SHOT, FIRE IN 5 DIRECTIONS AT ONE TIME	DOUBLE 5 WAY SHOT, DOUBLE DIRECTIONS AND DOUBLE FIRING DISTANCE	TRIPLE 5 WAY SHOT, FIRING ALL AROUND THE WHOLE SCREEN
	MISSLE	DOUBLE MISSLE	TRIPLE MISSLE (MOST POWERFUL)
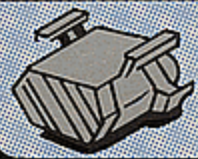	HYPER LASER	DOUBLE LASER	TRIPLE LASER



SPEED UP



HERO HAS FULLY AUTOMATIC FIRING

ROMSTAR™ inc.

TIME SOLDIERS

INSTALLATION MANUAL

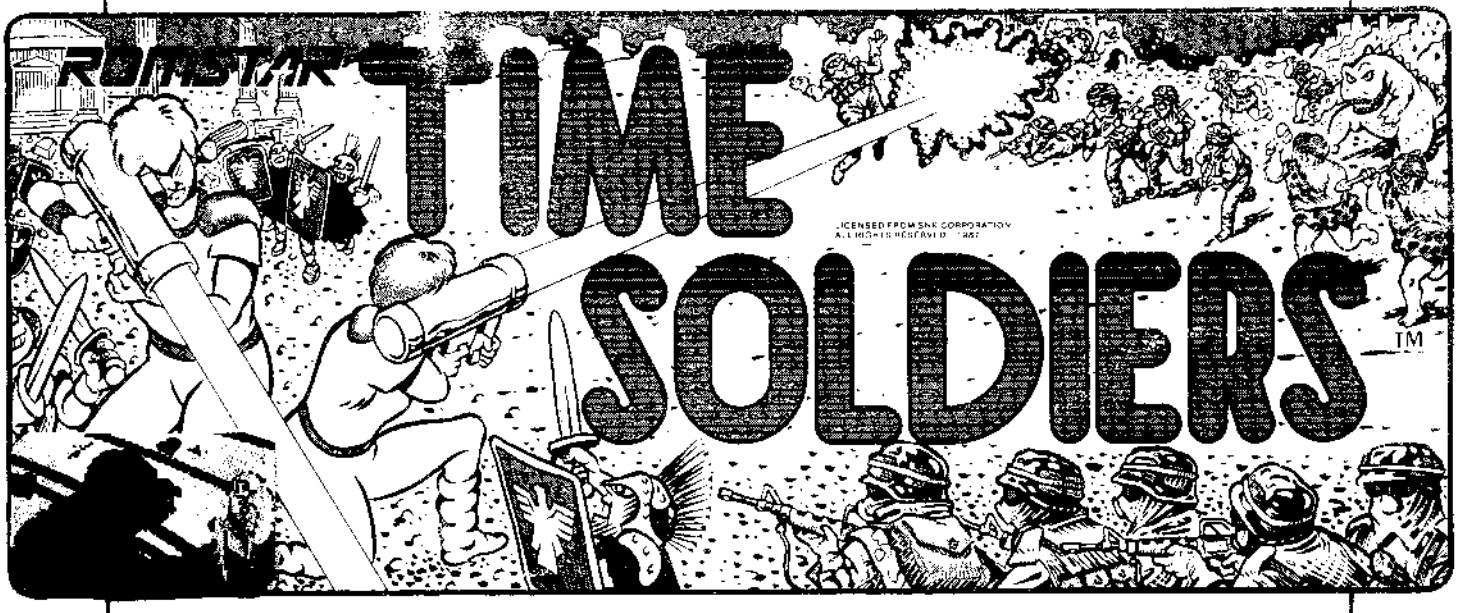

Romstar, Inc.
22857 Lockness Ave., Torrance, CA 90501
Phone (213) 539-2744 Fax (213) 539-3626

Licensed From SNK Corporation
All Rights Reserved © 1987

WARRANTY, REPAIR AND RETURN POLICY

THIS POLICY WILL REMAIN IN EFFECT FOR A PERIOD OF ONE YEAR FROM DATE OF PURCHSE FROM ROMSTAR. UPON EXPIRATION OF THIS ONE YEAR PERIOD, ROMSTAR WILL CONSIDER P.C.B. REPAIRS ON A BOARD—TO—BOARD BASIS, BUT IS NOT RESPONSIBLE FOR REPAIR OR REPLACEMENT.

1. *45 DAY FULL PARTS WARRANTY.
2. *60 DAY FULL ELECTRONICS WARRANTY (SEE RMA BELOW).
3. MINIMUM $40.00 SERVICE CHARGE FOR ALL NON-WARRANTY REPAIRS OR RETURNS.
4. **ANY** UNAUTHORIZED NON-FACTORY REPAIR OR ATTEMPTED REPAIR VOIDS WARRANTY.

(*ALL WARRANTY PERIODS BEGIN ON THE DATE OF PURCHASE FROM ROMSTAR)

RETURN MERCHANDISE AUTHORIZATION — (RMA)

1. ALL RETURNED MERCHANDISE MUST HAVE AN RMA NUMBER CLEARLY VISIBLE ON THE OUTSIDE OF THE PACKAGE.
2. ALL RMA NUMBERS MUST BE OBTAINED FROM ROMSTAR BY AN AUTHORIZED ROMSTAR DISTRIBUTOR. (PLEASE HAVE ROMSTAR SERIAL NUMBER AVAILABLE WHEN CALLING FOR AN RMA #).
3. **ALL** PC BOARDS RETURNED TO ROMSTAR WITHOUT AN RMA NUMBER WILL BE SUBJECT TO A MINIMUM CHARGE OF $40.00.
4. ROMSTAR WILL SHIP ADVANCE REPLACEMENT BOARDS TO DISTRIBUTORS OR AT DISTRIBUTORS REQUEST, DROP-SHIP BOARDS DIRECT TO THE OPERATOR.
5. ADVANCE REPLACEMENT BOARDS WILL BE BILLED TO THE DISTRIBUTOR UNTIL RECEIPT OF A RETURNED BOARD BY ROMSTAR AT WHICH TIME A CREDIT WILL BE ISSUED.
6. ALL REPAIRS AND/OR REPLACEMENTS WILL BE SHIPPED BY ROMSTAR WITHIN 24 HOURS OF RECEIPT OR REQUEST. (SUBJECT TO AVAILABILITY OF BOARDS).
7. FOR ANY ROMSTAR PRODUCT PURCHASED AFTER 3/1/86, A ROMSTAR WARRANTY CARD MUST BE ON FILE FOR EACH BOARD TO FACILITATE REPAIR & RETURN.

ANY QUESTIONS CONCERNING THESE POLICIES SHOULD BE DIRECTED TO DENNIS SABLE, TECHNICAL MANAGER OR SHAWN ZENKER, OPERATIONS OFFICER.

Installing Your

TIME SOLDIERS

New Game Package

Table of Contents

New Game Package Contents 2

Power and Monitor Requirements 2

Recommended Tools and Supplies. 3

Dip Switch Tables . . . . . 3&4

Joystick Assembly Diagram 5

Installation Procedures. 6

Control Panel Positioning 11

TECH TIPS . . . . . 12 - 13

Main Harness Connections . . . . . outside back cover

NEW GAME PACKAGE CONTENTS

1 Main Printed Circuit Board (PCB)	1 Marquee
1 Monitor Bezel	1 Control Panel Overlay
1 Set Legs, Bolts, & Spacers	1 Plex Control Cover
1 Connecting Wire Harness	1 Set Side Graphics
2 Eight-Way Joystick	1 Set Play Instructions & Function Labels
6 Player Button Assemblies	1 Installation Manual

Note: Replacement accessories available through your exclusive **Romstar** distributor

POWER REQUIREMENTS		MONITOR REQUIREMENTS
+5 VDC	11 amp minimum	Vertical Mount Raster Scan
+12 VDC	1 amp minimum	Negative Composite Sync

Before You Get Started . . . Stop!

1. Does your **new game** package include all listed parts? (Is it complete?)
2. Is the game you have chosen to transform able to supply all the required voltages for the **new game**?
   Note: Some games, (i.e. Ms. Pac Man, Galaxian, etc.) regulate their voltages on the main P.C.B. This makes the existing power supply inefficient. These games will require a change in power supply for your **new game**. Many game supply houses can offer you a switching regulated power supply for a relatively low cost.
3. Is the monitor configuration compatible? In most games it is rather difficult to change the monitor from a vertical mount to a horizontal mount. We recommend you choose a game cabinet with the same mount as your **new game** requires.
4. Do you have the necessary tools? (See the recommended tool list)

Caution

F.C.C. Regulation Compliance

Operation of this equipment in a residential area is likely to cause interference — in which case, the user at his own expense, will be required to take whatever measures may be required to correct the interference.

Recommended Tools and Supplies

ROMSTAR **new game** package.
Phillips and Slot Screwdrivers
Socket Set
Enthusiastic Attitude
Wire Cutters and Strippers
Pliers or Channel Locks
Planning and Careful Thought
Electric Drill
3/32" • 1/4" • 7/16" Drill Bits
1/4" Plex Bit
1-3/16" Chassis or Sheet Metal Punch
1 1/4" Plex Hole Saw
Glass of Water and a Snack
Small File
Razor Knife and Sharp Blades
Straight Edge
Patience
Common Sense
Painting Supplies (if you do your own painting)
  Paint Brush and Paint (don't forget the primer)
  Paint Roller and Pan
  Sand Paper
  Putty Knife and Wood Putty
A Good Night's Sleep
Staple Gun and Staples
Soldering Iron and 60/40 **Resin Core** Solder
Vacuum Cleaner
Assorted Fastening Hardware
Shrink Tubing: 3/32" • 1/8" • 3/16"
Masking Tape
3 1/2" OR 4" Wire Ties
Spray Window Cleaner and Rags (baby diapers work GREAT!)

Dip Switch Tables

Optimize Your Profits

Thorough Research shows that two and a half minute games both satisfy players and also keep the quarters flowing.

If games aren't running about two and a half minutes long, then collections probably aren't at their peak. You'll want to tailor your game to your location. The trick is to adjust a few DIP switches. (See the chart in this book.) It's easy!

DIP SWITCH SETTING

DIP SWITCH 1

DIP SWITCH 1	1	2	3	4	5	6
REVERSE	OFF					
EASY		ON	ON			
NORMAL *		OFF	OFF			
HARD		ON	OFF			
ENGLISH VERSION *				ON		
FREE PLAY						OFF

DIP SWITCH 2

DIP SWITCH 2	1	2	3	4	5	6
COIN 1 1 C1P *				OFF	OFF	OFF
COIN 1 1 C2P				OFF	OFF	ON
COIN 1 1 C3P				OFF	ON	OFF
COIN 2 1 C1P				OFF	OFF	OFF
COIN 2 2 C1P				OFF	OFF	ON
COIN 2 3 C1P				OFF	ON	OFF
SOUND ON * ATTRACT MODE			ON			
PLAYER'S HERO 3 *	OFF	OFF				
PLAYER'S HERO 4	OFF	ON				
PLAYER'S HERO 5	ON	OFF				
PLAYER'S HERO 6	ON	ON				

*ROMSTAR RECOMMENDED SETTING

LS30 - 24 JOYSTICK ASSEMBLY DIAGRAM

HOW TO REMOVE KNOB OF JOYSTICK ASSEMBLY.

1. Insert "fingers" of joystick tool under knob. Make sure to align fingers with dots under knob. Push up to open top cap.
2. Use hex wrench to remove shaft nut.

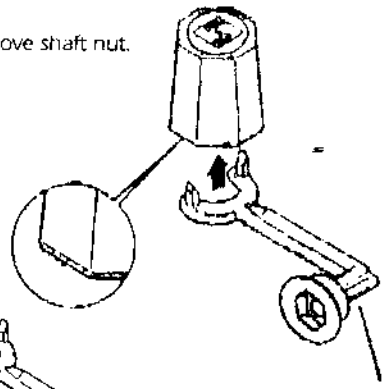

KNOB SETTING TOOL

PARTS NO.	PARTS NAME
LS30-1	Knob
A	Cap
B	Knut (M6)
C	Knob (Main Body)
D	Fastener
LS302	Lever Mask
LS30-3	Main Guide
LS30-4	Micro Switch Plate
LS30-5	Micro Switch
LS30-6	90 C-Clip
LS30-7	Spacer (B)
LS30-8	Spacer (A)
LS30-9	Washer (small)
LS30-10	Shaft Holder
LS30-11	Shaft Holder Stand
LS30-12	Washer (large)
LS30-13	Spring
LS30-14	120 C-Clip
LS30-15	Shaft
LS30-16	Star Washer
LS30-17	Rotary Switch Installation Plate (SUS)
LS30-18	Rotary Switch
LS30-18H	Harness
LS30-19	Rotary Switch Stopper
LS30-20	Stand
LS30-21	Steel Base
LS30-22	Knob Setting Tool
LS30-24	Complete Assembly

Installation Procedures

Something To Think About

Your final product will be a **new game**.

You have made a wise decision to transform a game that has seen better days in the all important cash box into a **new game**. This is by far the most cost effective alternative to maximize the return of your initial investment. All you provide is the cabinet with a power supply and a monitor. Oh yes, you will need a touch of elbow grease. And that's it! We provide the rest. The end result is . . . a **new game** at a very low cost.

Fact: Spend a little time on the cabinet's appearance (i.e. marquee, control panel and cabinet graphics). With a little paint, some wood putty and new lights, you will raise the profits of any game. . .especially with the introduction of a **new game** package.

The **new game** look should always apply to the inside of your game as well as the outside. A few wire ties and shrink tubing on your harness; some fastening hardware on your subassemblies and a sweep with the ol' vacuum cleaner will ensure that unnecessary *glitches* do not occur.

Remember: You are creating a **new game** .

If you have any questions or just need some advice on any of your **new game** transformations, don't hesitate in giving a member of our technical staff a call.

Let's Get Our Hands Dirty

Preparing the Original Game for the New Game

Remove the following:

1. Main logic board(s)
2. Control panel
3. Monitor plexiglass
4. Monitor Bezel
5. Marquee
6. Graphics

I would recommend painting your cabinet to give it a fresh new look. (If it is geographically inconvenient to make use of our facilities, you may consider having an auto body shop take care of your painting needs.)

If your cabinet has wood grain sides; remove old graphics and adhesive (adhesive may be removed with **lacquer** thinner.

If you intend to use your original plexiglass, be sure it is in mint condition or it should be replaced.

Thoroughly clean out your cabinet.

Time To Install Your New Goodies

Before You Start . . . Remember DO NOT Do This Work With The Power On!

Logic P.C.B. Cage

Mount the logic cage securely (away from power supply).

A Mark and drill pilot holes (3/32").

B Place the logic cage (bottom) over the holes and secure it with the supplied wood screws.

C Install the P.C.B. into the logic cage. Use feet and spacers supplied and adjust them so that the screws will go through the slots int he cage bottom.
Note: Leave the cage cover off until you have attached the entire wire harness and have tested the game for proper operation.

Wire Harness

Attach the wire harness connector to the main logic board. **CAUTION:** Sometimes the connector is not keyed and it is very easy to install it reversed on the logic board. Even if it is keyed, always **triple check** to be sure the wire inputs were connected correctly to the connector and the connector to the logic board.

Connecting the Wire Harness to the Existing Wires

When you hook up the control panel, power supply, monitor or other subassemblies that remain in the game cabinet to your new wire harness, try and use their existing secondary connectors.

1. Cut the original wire approximately three inches from the original connector. Strip off about one half inch of insulation.
2. Solder the new wire designated for that position to the original wire you just stripped.

Warning: DO NOT JUST TIE THE WIRES TOGETHER. THIS CAN CAUSE NAGGING INTERMITTENT PROBLEMS THROUGH LOOSE CONNECTIONS OR OXIDATION OR BOTH. **Always take the time to do it right.**

3. Melt shrink tubing around all your in-line wire connections. Do not use electrical tape. Tape could unravel over a period of time due to the cabinet heat and cause you a great deal of trouble.
4. Use wire tie wraps, and secure the cable to the cabinet whenever it seems necessary. Remember this is a **new game** , not a sloppy conversion.

Power Wires

1. Connect the wires that are designated for your power supply. You will need a supply of +5V, +12V & ground. Your **new game** package may not require all of the voltages that were used in the original game. Tie off any unused wires.
2. You will notice that you probably have more than one wire for each voltage. It is a good idea to use all wires supplied (double up if it is necessary). This will help to ensure that you don't overload the edge connector pins and cause them to "burn".

Monitor Wires

You will be connecting the wires designated for the RED, GREEN & BLUE video guns along with the SYNC & GROUND wires.

NOTE . . . CONCERNING SYNC:

Your **new game** only calls for one sync wire connection, this is called **composite sync** (horizontal and vertical tied together). This composite sync is also **negative**. Most monitors have supply positions for both negative and positive sync. You can check your monitor manual or call our technical department for assistance.

Speaker Wires

Find the two wires that are designated for the speaker and hook 'em on up.

Coin Door Wires

1. Connect the designated wires to the coin switches and meter.
2. You can connect your door lamps to the unused −5V power supply. Some games have separate power outputs for the coin door lamps.
3. Be sure to clean and lubricate your old coin mechanisms. Keep the money coming in.

GUESS WHAT?

You are almost done with the electrical connections of your **new game**. All you have left is the control panel wiring. But we are going to hold off on that for right now. We have a few other things we need to do first. So why don't you go ahead and get yourself a drink of water and stretch your legs. When you return, we can take a fresh look at your progress and then move forward.

Smoke Test

What Test?

Don't worry. All this means is that you are ready to apply power to the system for the first time and you pray that there will be no smoke from a simple oversight.

You are just about ready to power up the logic board. But first we need to recheck your work.

1. Carefully inspect the game for loose power wires, exposed connections and extra fastening hardware.
2. Make sure the logic board, board cage, monitor and power supply are securely fastened in place.
3. **Double check** the connectors to be sure they are wired and connected properly.
4. Set the dip switches on the logic board to the factory recommendations. (Refer to page 5.) Also, be sure you set the dip switches for "DEMO WITH SOUND". This will enable you to hear as well as see that your new P.C.B. is functional.

Time to Apply Power:

1. Look and smell for smoke. (TURN OFF IMMEDIATELY IF ANY IS NOTICED)
2. Listen for game sounds.
   If after one minute you have not heard any sounds:
   A) Check for proper dip switch settings.
   B) Adjust volume control and check speaker connections.
   C) Check the +12V power supply to the logic board.
   NOTE: If you do get sounds, but they are a little fuzzy, switch the wires around on the speaker.
3. How is the monitor image?
   A) **Is the picture in sync?**
   If your picture has the top and bottom halves of the screen reversed and it will not stop rolling, change your sync polarity on the monitor. (Positive to negative (see tech tips section).

NOTES:

B) **Now how's your picture?**
- It it centered?
- Is it too bright or dim?
- Is it in focus?

Check your monitor manual for these adjustments. If your screen looks "off", then your **new game** transformation may have been in vain. So let's take the time to make the monitor look great.

C) **Is the picture upside-down?**
Refer to your monitor manual - switch two horizontal yoke wires and then switch two vertical wires. (Pull the pins in the connector on the monitor P.C.B. to switch them.) or check Dip Switch Tables

Control Panel Assembly

1. Remove the buttons, joysticks and wire harness and put them aside fro now. Do not remove the original panel overlay until the new holes have been drilled.
2. Mark positions on the panel for the new holes.
   ROMSTAR supplies a clear 1/8" thick piece of plexiglass with every **new game** package to cover the control panel. We feel that your **new game** investment is well worth protecting. . . and the control panel is the first place to show wear and tear.
   - You will need to cut this piece to size. Use the control panel as a template.
   - Use a razor knife to score the plexiglass **deeply**. Then use a pair of pliers to break away the extra plexiglass.
3. Now drill the holes in your panel that you have marked off for the *buttons, joystick* and *bolts.*
   Hint: For best results, use a chassis or sheet metal punch for button holes.
4. Drill the same holes on your plexiglass panel protector. Once again use your panel as a template.
   Hint: To avoid chipping while you are drilling the holes, place the plexiglass securely on a soft wood surface and use a plexiglass drill bit and hole cutter.
5. The holes are now all cut. Smooth them out on your panel and plexiglass with a fine toothed file.
6. Remove the original graphics overlay from the panel. Clean up the panel and install your **ROMSTAR** graphics.
   Make It Easier: Peel the top half of the protective backing off of your graphics. Start from the center and smooth out your overlay. Make sure you have about an inch extra coming off the top. *No bubbles please.* Now peel off the bottom half and do the same as you did for the top.
7. Adhere the instruction and function labels.
8. Install the Plex Control Cover over your completed **new game** panel.
   Note: Be sure to bolt the plexiglass securely to the panel.
9. Mount the joystick and the buttons to the panel and wire them up. (Use the existing Panel wiring if possible)

Marquee Installation

Using the original marquee as a template, Center your **new game** marquee graphics and score the new marquee deeply to fit the cabinet. Break off the excess with pliers.

Be sure the light behind the marquee works. Everything should **always work** on a new game.

Take your time ... Don't forget this is going to be a **new game.**

Side Graphic Installation

1. Be sure sides of game are clean and free of old adhesive, dust, etc.
2. Mark position of decal with eraseable pen or pencil (centered on upper half of cabinet).
3. Peel off top 1/4 of decal backing and apply to cabinet with a smoothing motion (use a soft rag). Continue peeling off backing and smoothing.
4. Remove any small bubbles with a pin or razor blade (pop them!)

Finishing Touches

1. Check the game inside and out for any imperfections. Secure any loose wiring or fastening hardware.
2. Make sure the coin door is tight and the coin mechs are well adjusted. A game is no good to anybody if you can't get a coin into it.
3. Once again go over every step of this **new game** transformation in your mind. Be sure everything is correct and to your liking.
4. Power up the game.
   A. Check all the coin switches. (Does the coin meter work?)
   B. Play your **new game** .
   - Are all the player controls working?
   - Are the game sounds present?
   - Is the volume level proper?
   - Are the dip switches set properly?

Well, that's about it. Good Luck.

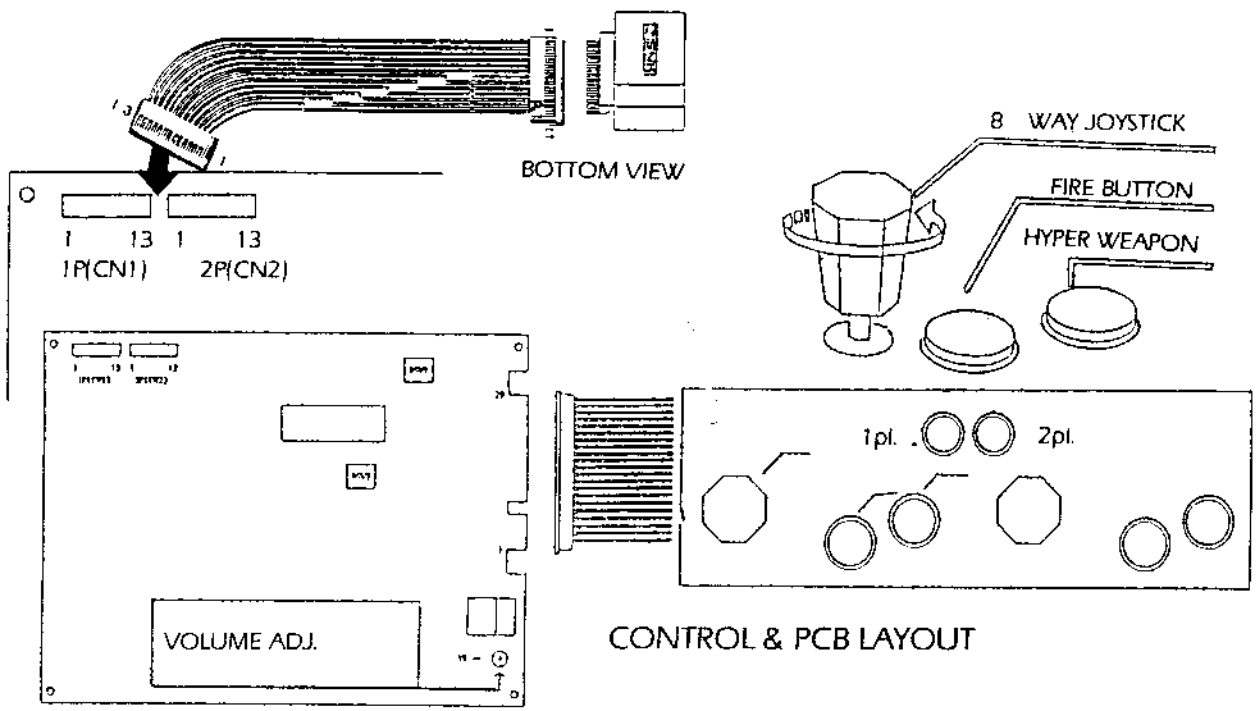

CONTROL & PCB LAYOUT

Star Tech Tips

We are grateful to Star Tech Journal™ for allowing us to publish the following excerpts from their journal.

1. Monitor Sync

If your monitor does not have dual polarity positions for sync, you may use one of the following methods to get your game going.

CURE 1: Install a simple one I.C. Circuit on your logic board. This I.C. may be "piggy backed" on to another 7404 series chip for power by bending up all but the two power pins so that they are parallel to the top surface of the new I.C. and then connecting the power pins only to the existing chip. (See Fig. 1) Next connect the sync wires as shown in Fig. 2. (Note: Figure 2 shows a hookup for either **composite** or **separate** syncs.)

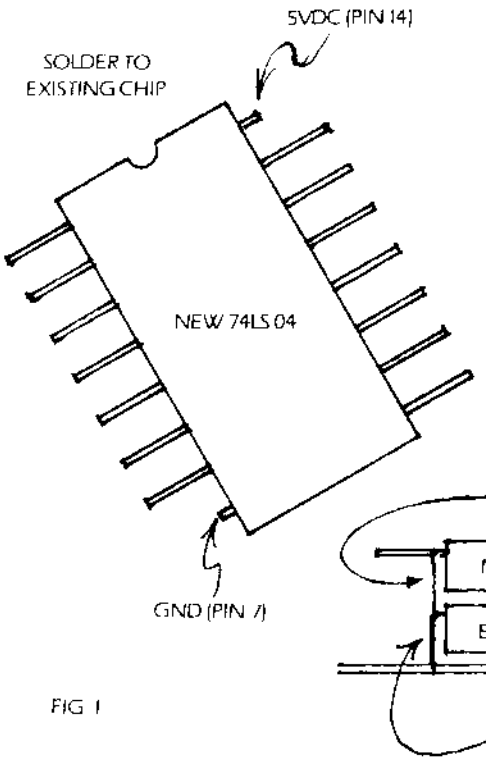

FIG 1

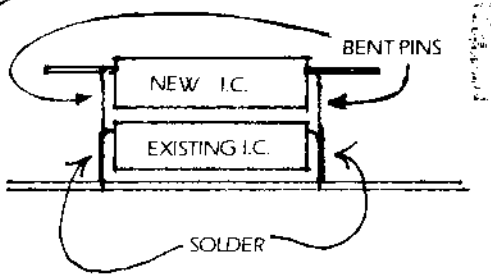

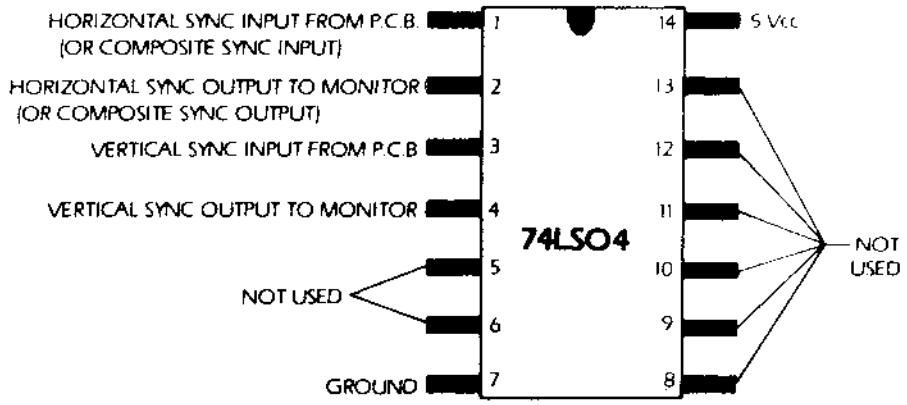

FIG. 2

CURE 2: Used for Wells-Gardner Video-Sync boards with positive sync connections only. (Vertical mount board 85x140B.

Cut the traces on the solder side of the board between input pins 5 & 6 to the unbanded (anode) ends of diodes X201 & X202.

Add MPSA56 transistor as follows:

Collector to anode leads of diodes X201 & X202. Base to pins 5 & 6 of the video input connector. Emitter to cathode (banded) lead of zener diode ZD201.

Insert a 1N4148 diode - cathode to the emitter of the MPSA56 and anode to the base. (See Fig. 3)

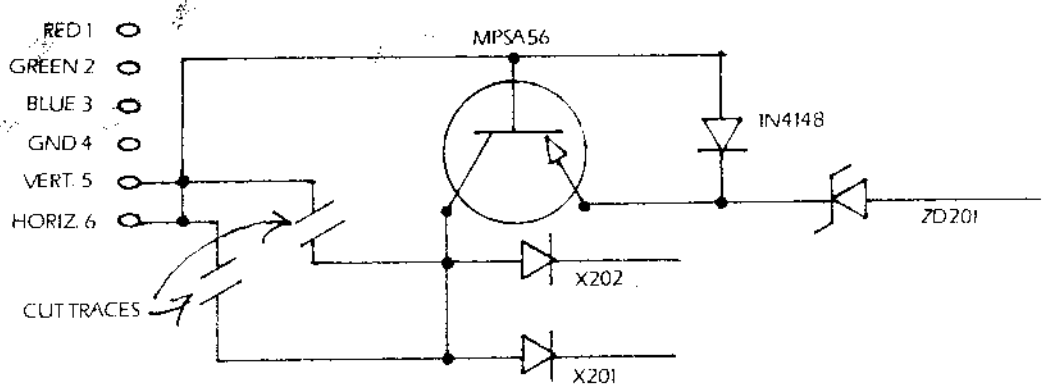

FIG 3

2. Horizontal Tearing

CAUSE: The negative sync signal of most logic sets are slightly different than the GO7-CBO monitor negative sync inputs. The result of this mismatch is a horizontal "wave" or "curl".

CURE 1: On the monitor deflection board, replace C303 with a 10uf 25V radial lead capacitor with the positive lead towards the collector of X305. (CAUTION: be sure to check this step as the original cap is not polarized.) Then replace C501 with the cap removed from the C303 location.

CURE 2: Connect 1N4148 fast-switching diodes across both the positive and negative sync inputs to the monitor. (See Fig. 4) NOTE: Both diodes must be installed or you will not have vertical stability.

FIG. 4

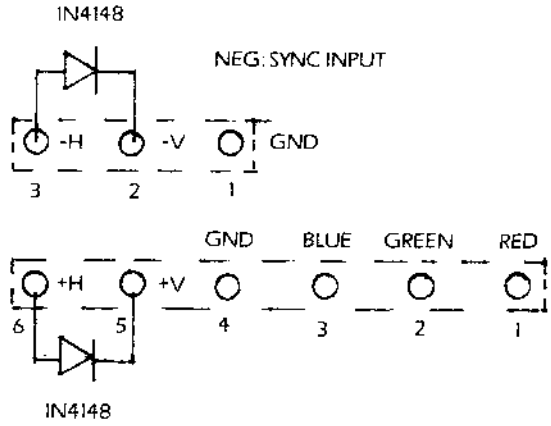

CURE 3: Join negative sync inputs J2 and J3 together with a jumper. Locate W102 and install a jumper from W102 to either J2 or J3.

CURE 3: For Wells-Gardner K4600 series monitors
Replace C356 (47uf 25V) on the Horizontal/vertical board (vertically mounted board nearest the flyback transformer) and center the horizontal hold pot. Turn L351 for the best horizontal stability and fine-tune with the horizontal width pot.

TIME SOLDIER **HARNESS**

Wire Color	Solder Side			Parts Side	Wire Color
Black	Ground	A	1	Ground	Black
Black	Ground	B	2	Ground	Black
Red	+5VDC	C	3	+5VDC	Red
Red	+5VDC	D	4	+5VDC	Red
Green	N/A	E	5	N/A	Green
Yellow	+12VDC	F	6	+12VDC	Yellow
	Post	H	7	Post	
	Coin Counter 2	J	8	Coin Counter 1	Brown
	Coin Lockout	K	9	Coin Lockout	
White	Speaker (-)	L	10	Speaker (+)	White
	Ground	M	11	Audio	
Light Green	Video Green	N	12	Video Red	Pink
Gray/White	Video Sync (Comp/Neg)	P	13	Video Blue	Sky Blue
Violet	Service Switch	R	14	Video Ground	Black
Gray	N/A	S	15	N/A	Orange
	Coin 2	T	16	Coin 1	Violet/White
White/Black	2P Start	U	17	1P Start	Black/White
Brown/Black	2P Up	V	18	1P Up	Brown/White
Red/Black	2P Down	W	19	1P Down	Red/White
Orange/Black	2P Left	X	20	1P Left	Orange/White
Yellow/Black	2P Right	Y	21	1P Right	Yellow/White
Green/Black	2P Fire	Z	22	1P Fire	Green/White
Blue/Black	2P Hyper Weapon	a	23	1P Hyper Weapon	Blue/White
	N/A	b	24	N/A	
	N/A	c	25	N/A	
	N/A	d	26	N/A	
Black	Ground	e	27	Ground	Black
Black	Ground	f	28	Ground	Black

Wire Color / Stripe Color