
ATARI
BLACK WIDOW
ATARI

CAST OF CRITTERS:

 MOSQUITO	If shot becomes $.
 BEETLE	Eats $. If shot becomes $.
 HORNET	Lays eggs on $. If shot becomes $.
 EGG	Grows to become hornet or spoiler. When pushed off web scores 500, 1000, 1500, 2000, 2500.
 GRUB-STEAK	Tag for points 500, 250, 100, 50 the sooner the better.
 SPOILER	Invulnerable,only destroyed by grenade, bug slayer or rocket-bug.
 GRENADE	Explodes if shot, bugs and eggs within kill zone score 500 points each.
 ROCKET-BUG	Invulnerable, launches "rockettes" at you from other bugs it tags. Shoot rockettes for 1000 points each.
 THUNDER-BUG	If shot, breaks formation and attacks. Shoot again to explode T-Bug and earn 250 pts. Shoot and explode all T-Bugs for 5000 bonus pts. Keep away from all T-Bugs to earn 10,000 pts.
 BUG-SLAYER	Harmless to you, invulnerable, competes with you for food. Beat it to its flashing prey for bonus.

INSTRUCTIONS:

- Avoid moving insects.
- Shoot insects, then tag $ for points. The sooner you tag $, the more it's worth.
- Bulldoze eggs  off the edge or into center BEFORE they hatch. The more you push, the more they're worth.
- Colored webs are like traffic lights
  - Green ——— : both ways for you, in-only for bugs.
  - Red ——— : in-only for all.

TM-234
1st printing

BLACK WIDOW™

Operators Manual

With Illustrated Parts Lists



© 1983 Atari, Inc. All Rights Reserved

If reading through this manual does not lead to solving a certain maintenance problem, call TELEHELP® at the Atari Customer Service office in your geographical area, as shown below

WEST and CENTRAL U S.A.

Parts and Service

Atari, Inc.
California Customer Service Office
1105 N. Fair Oaks Avenue
P. O. Box 427, Sunnyvale, CA 94086
Telex 17-1103
(Monday–Friday, 7:30–4:00 pm Pacific Time)

☎ From California, Alaska, or Hawaii
(408) 745-2900

☎ Service from anywhere in the area shown in white
toll-free **(800) 538-1611**

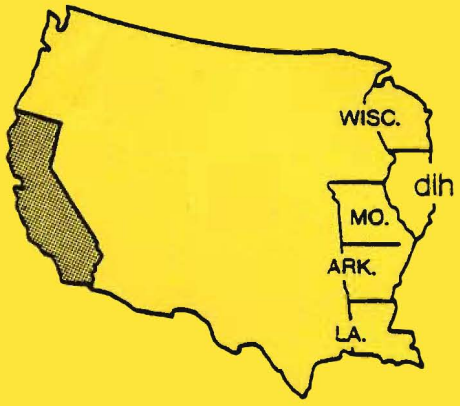

EAST U.S.A.

Service only

Atari, Inc.
New Jersey Customer Service Office
12A World's Fair Drive, Somerset, NJ 08873
Telex 37-9347
(Monday–Friday, 7:30–4:00 pm Eastern time)

☎ From New Jersey
(201) 469-5993

☎ From anywhere else in this area
toll-free **(800) 526-3849**



EUROPE

Parts and Service

Atari Ireland Limited
European Customer Service Office
Tipperary Town, Ireland
Telex 28165
(Monday–Friday, 9:00–6:00 pm GMT)

☎ 062-52155

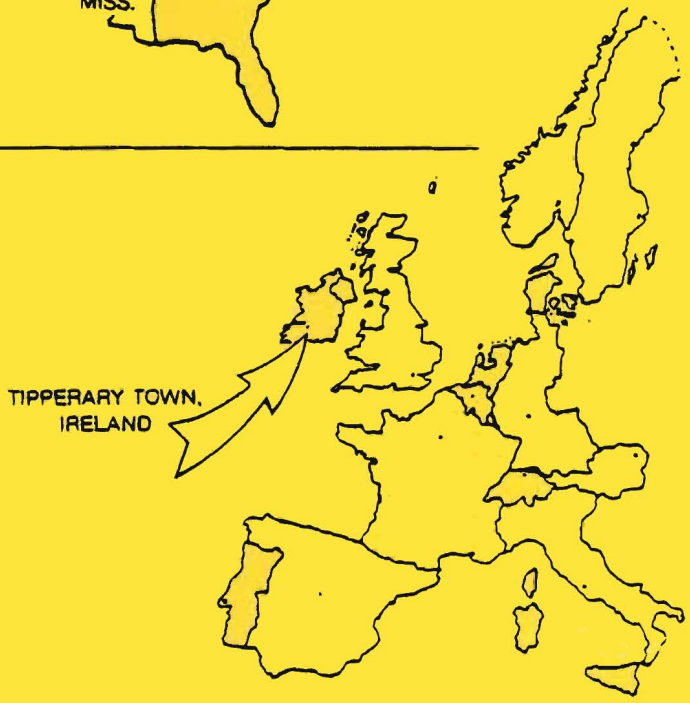

TM-234
1st printing

BLACK WIDOW™

Operators Manual

With Illustrated Parts Lists

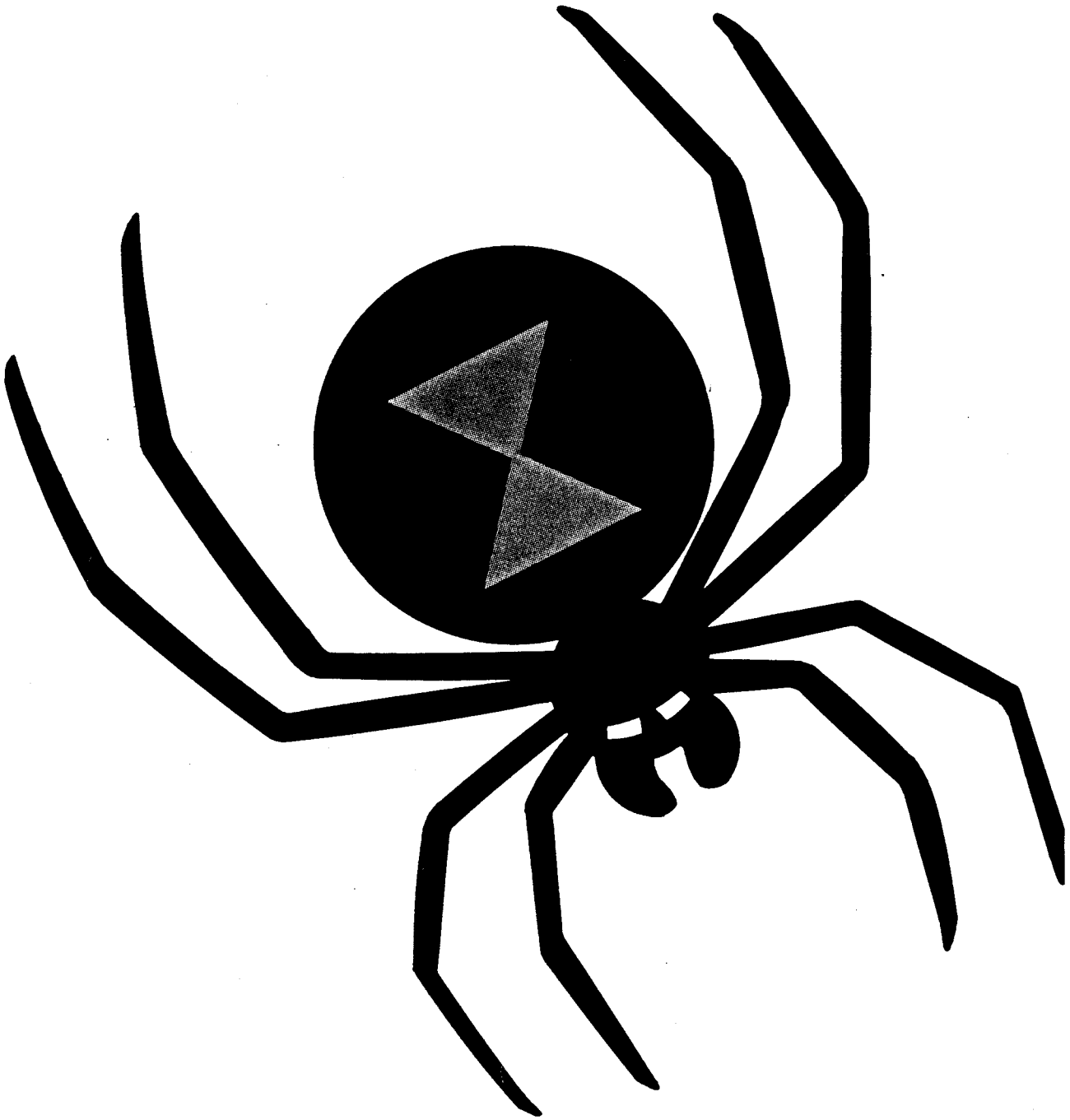

© 1983 Atari, Inc. All Rights Reserved

© 1983 by Atari, Inc. All rights reserved.

No part of this publication may be reproduced by any mechanical, photographic, or electronic process, or in the form of a phonographic recording, nor may it be stored in a retrieval system, transmitted, or otherwise copied for public or private use, without permission from the publisher.

The game play, all graphic designs, this technical manual, its accompanying schematic diagrams, and the display manual are protected by the U.S. Copyright Act of 1976.

This Act provides for increased penalties for violating federal copyright laws. Courts *can impound* infringing articles while legal action is pending. If infringers are convicted, courts can *order destruction* of the infringing articles.

In addition, the Act provides for payment of statutory damages of up to $50,000 in certain cases. Infringers may also have to pay costs and attorneys' fees, fines up to $25,000, and face an imprisonment of up to one year.

Atari will aggressively enforce its copyrights against any infringers. *We will use all legal means* to immediately halt any manufacture, distribution, or operation of a copy of video games made by us. Anyone who purchases such copies risks forfeiting such a game.

Published by:
ATARI, INC.
790 Sycamore Drive
P.O. Box 906
Milpitas, California 95035

Printed in the U.S.A. 3M

Notice Regarding Non-ATARI Parts

WARNING

Use of non-ATARI parts or modifications of your ATARI game circuitry may adversely affect the safety of your game, and injure you or your players.

You may void the game warranty (printed on the inside back cover of this manual) if you do any of the following:

- Substitute non-ATARI parts in the game
- Modify or alter any circuits in the game by using kits or parts *not* supplied by Atari.



to licensed communications services is not permitted by the FCC (Federal Communications Commission).

If you suspect interference from an ATARI game at your location, check the following:

- All grounds (green wires) in the game are properly connected as shown in the game wiring diagram, and
- The power cord is properly plugged into a *grounded* 3-wire outlet.

If you are unable to solve the interference problem, please contact ATARI Customer Service. See page vi for service in your area.

Table of Contents

1 Set-Up Procedures

A. How to Use This Manual 1-1
B. Game Overview. 1-3
C. Installation Specifications 1-3
D. Inspecting the Game 1-3
E. Voltage-Plug Selection and Fuses 1-4
F. Switch Locations 1-5
Power On/Off Switch 1-5
Utility Panel Switches 1-5
Option Switches 1-5
G. Selecting the Options 1-6

2 Self-Test Procedure

A. Obtaining the Operator Information Display. 2-2
B. Obtaining the Self-Test Displays 2-2

3 Illustrated Parts Lists

A. Cabinet-Mounted Assemblies 3-2
B. Control Panel Assembly. 3-4
C. Fluorescent Tube and Speaker. 3-8
D. Video Displays 3-9
E. Utility Panel Assembly. 3-12
F. Coin Door Assemblies 3-13
G. Power Supply Assembly. 3-20
H. Printed-Circuit Boards 3-22

List of Illustrations

Figure 1-1	Game Overview	1-2
Figure 1-2	Voltage-Selection Plug and Fuse Locations	1-4
Figure 1-3	Switch Locations	1-5
Figure 2-1	Operator Information Display	2-2
Figure 2-2	Screen 1—Test Passes	2-3
Figure 2-3	Screen 1—Test Fails	2-4
Figure 2-4	Screen 2	2-4
Figure 2-5	Screen 3	2-4
Figure 2-6	Screen 4	2-5
Figure 2-7	Screen 5	2-5
Figure 2-8	Screen 6	2-5
Figure 2-9	Screen 7—Diagnostic Program Displays	2-6
Figure 3-1	Cabinet-Mounted Assemblies	3-3
Figure 3-2	Control Panel Assembly	3-4
Figure 3-3	8-Position Joystick Assembly	3-6
Figure 3-4	Fluorescent Tube and Speaker	3-8
Figure 3-5	Wells-Gardner Video Display	3-9
Figure 3-6	Amplifone Video Display	3-10
Figure 3-7	Utility Panel Assembly	3-12
Figure 3-8	Vertically Mounted Coin Door	3-13
Figure 3-9	American-Made Coin Door	3-16
Figure 3-10	Color X-Y Power Supply Assembly	3-20
Figure 3-11	PCB Mounting Hardware	3-22
Figure 3-12	Black Widow Game Printed-Circuit Board Assembly	3-23
Figure 3-13	Regulator/Audio II PCB Assembly	3-32

List of Tables

Table 1-1	Installation Specifications	1-3
Table 1-2	Switch Settings for Price Options	1-6
Table 1-3	Switch Settings for Special Options	1-7
Table 1-4	Switch Settings for Bonus and Difficulty Options	1-7
Table 2-1	RAM Locations	2-3
Table 2-2	ROM Locations	2-3
Table 2-3	EAROM and Custom I/O Chip Locations	2-4
Table 2-4	Vector-Generator Diagnostic Tests	2-6

Set-Up Procedures

A. How to Use this Manual

This manual, written for game operators and service technicians, describes the Black Widow Upright game.

Chapter 1 contains game specifications, inspection procedures, voltage plug and fuse information, switch locations, and option information.

Chapter 2 contains self-test procedures.

Chapter 3 contains illustrated parts lists. Figures 1-1 and 3-1 illustrate the Upright game cabinet. These figures refer you to other places in the manual for more information about specific cabinet parts.

Chapter 1

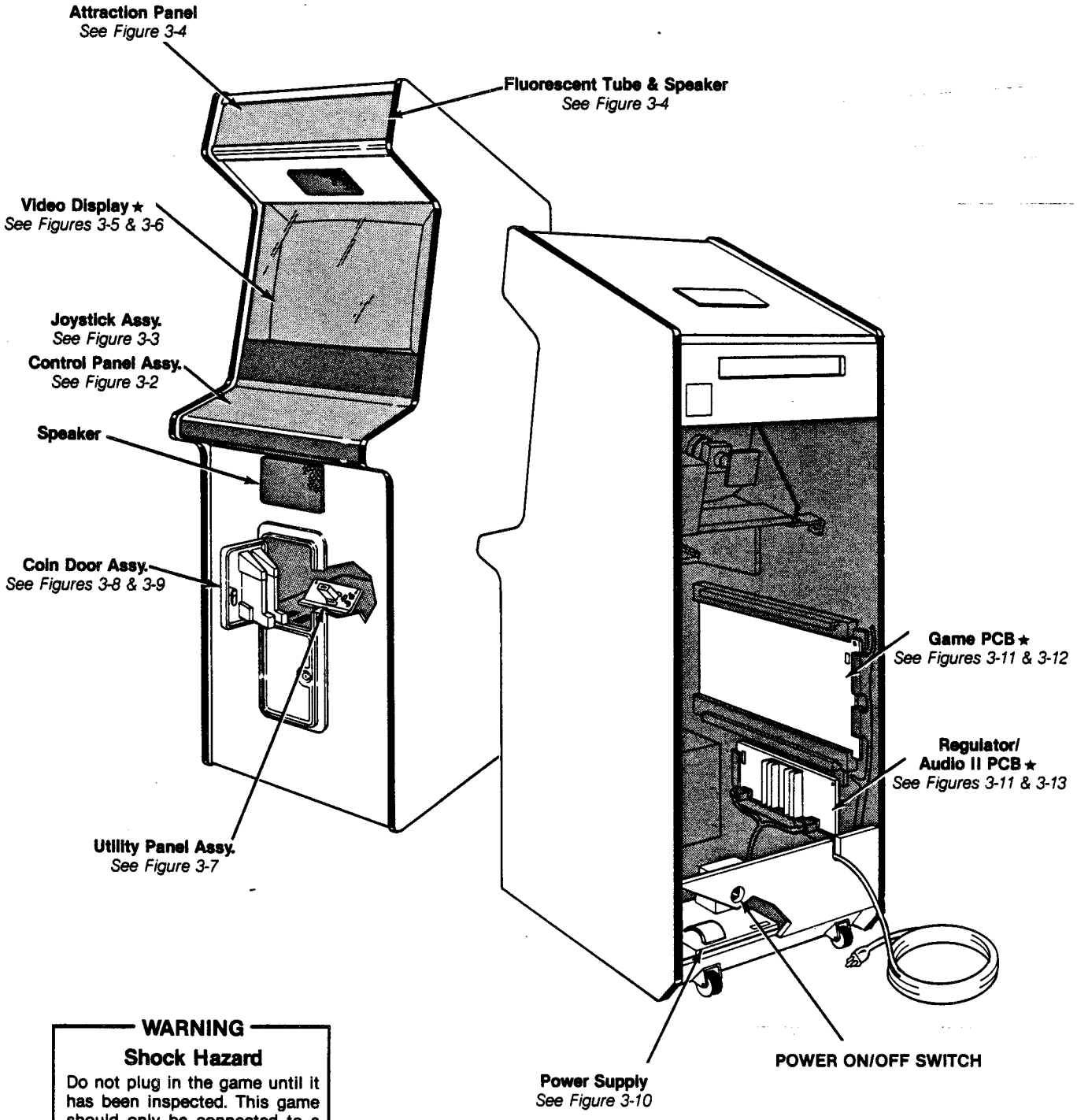

WARNING

Shock Hazard

Do not plug in the game until it has been inspected. This game should only be connected to a grounded 3-wire outlet. If you have only a 2-wire outlet, we recommend you hire a licensed electrician to install a grounded outlet. Players may receive an electrical shock if this game is not properly grounded!

★ *Item with a serial number label*

Figure 1-1 Game Overview

B. Game Overview

Black Widow challenges you, the spider, to defend your web from mosquitoes, beetles, hornets, and other insects. Use two joysticks to avoid or shoot enemies and bugs. Watch out for the grenade, rocket bug, thunder bug, spoiler, and collect the grubstakes for extra points! Skill Step™, the Atari feature that allows players to start consecutive games at higher levels, offers players continual challenge.

All major parts of the Black Widow game are illustrated in Figure 1-1.

C. Installation Specifications

Table 1-1 describes the physical, electrical, and environmental specifications of the game.

Table 1-1 Installation Specifications

Power	200 W
Temperature	0° to +38° C (+32° to +100° F)
Humidity	Not to exceed 95% relative
Height	184 cm (72½ in.)
Space Required	64 x 80 cm (25½ x 31½ in.)

D. Inspecting the Game

Please inspect your game carefully to ensure that it was delivered to you in good condition.

WARNING

Shock Hazard

To avoid electrical shock, do not plug in the game until the procedures in Sections D and E have been completed!

Do not touch internal parts of the display with your hands or with metal objects held in your hands!

1. Examine the exterior of the game cabinet for dents, chips, or broken parts.
2. Remove the screws from the rear access panel. Unlock and open this panel and the coin door. Inspect the interior of the game as follows:
   a. Ensure that all plug-in connectors (on the game harnesses) are firmly plugged in. Replug any connectors found unplugged. Do not force connectors together. The connectors are keyed so they only fit in the proper orientation. A reversed edge connector may damage a PCB and will void your warranty.
   b. Ensure that all plug-in integrated circuits on the PCB are firmly plugged into their sockets.
   c. Remove the tie-wrap that secures the coiled power cord inside the cabinet. Inspect the power cord for any cuts or dents in the insulation. Repair or replace it as required. Place the square strain-relief plate in the wood slot at the bottom of the rear panel opening.
   d. Inspect major subassemblies, such as the power supply, control panel, and video display. Make sure they are mounted securely and that the green ground wires are connected.

E. Voltage-Plug Selection and Fuses

The power supply in your game contains six fuses. When you replace a fuse, use the identical type fuse with the same electrical rating (see Figure 1-2).

The power supply operates on the line voltage of many countries. The power supply comes with either one, two, or three voltage-selection plugs. Plug voltages and wire colors are 100 VAC (violet wire color), 120 VAC (yellow wire color), 220 VAC (blue wire color), and 240 VAC (brown wire color).

See Figure 1-2 for placement of the voltage-selection plug. Before plugging in your game, check your line voltage. Next, check the wire color on the voltage-selection plug. Make sure the voltage-selection plug is correct for the voltage of your location.

Now plug the game into a grounded 3-wire outlet.

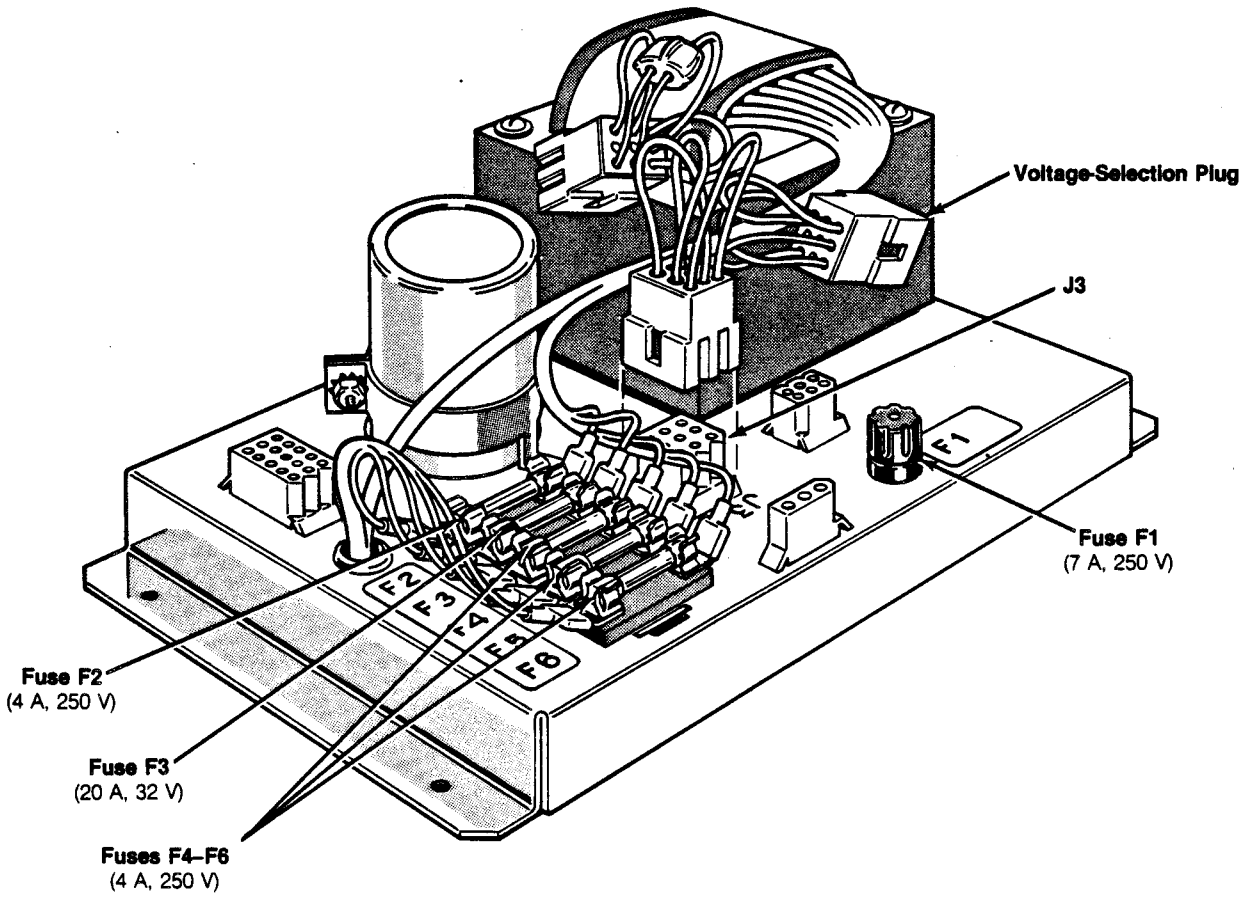

Fuse cover not shown.

Figure 1-2 Voltage-Selection Plug and Fuse Locations

F. Switch Locations

Power On/Off Switch

The power on/off switch is located on the back of the cabinet on the lower left side (see Figure 1-3).

Utility Panel Switches

The volume control, coin counter, self-test switch, and auxiliary coin switch are on the utility panel. The utility panel is located inside the upper coin door (see Figure 1-3). The volume control adjusts the level of sound produced by the game. The coin counter records the number of coins entered into the game. The self-test switch initiates and stops the self-test mode. The auxiliary coin switch is used to credit the game without activating a coin counter.

Option Switches

Option switches for game price, number of lives, bonus, and difficulty selection are on the CPU printed-circuit board (PCB). These switches are at locations D4, B4, and P10/11 (see Figure 1-3).

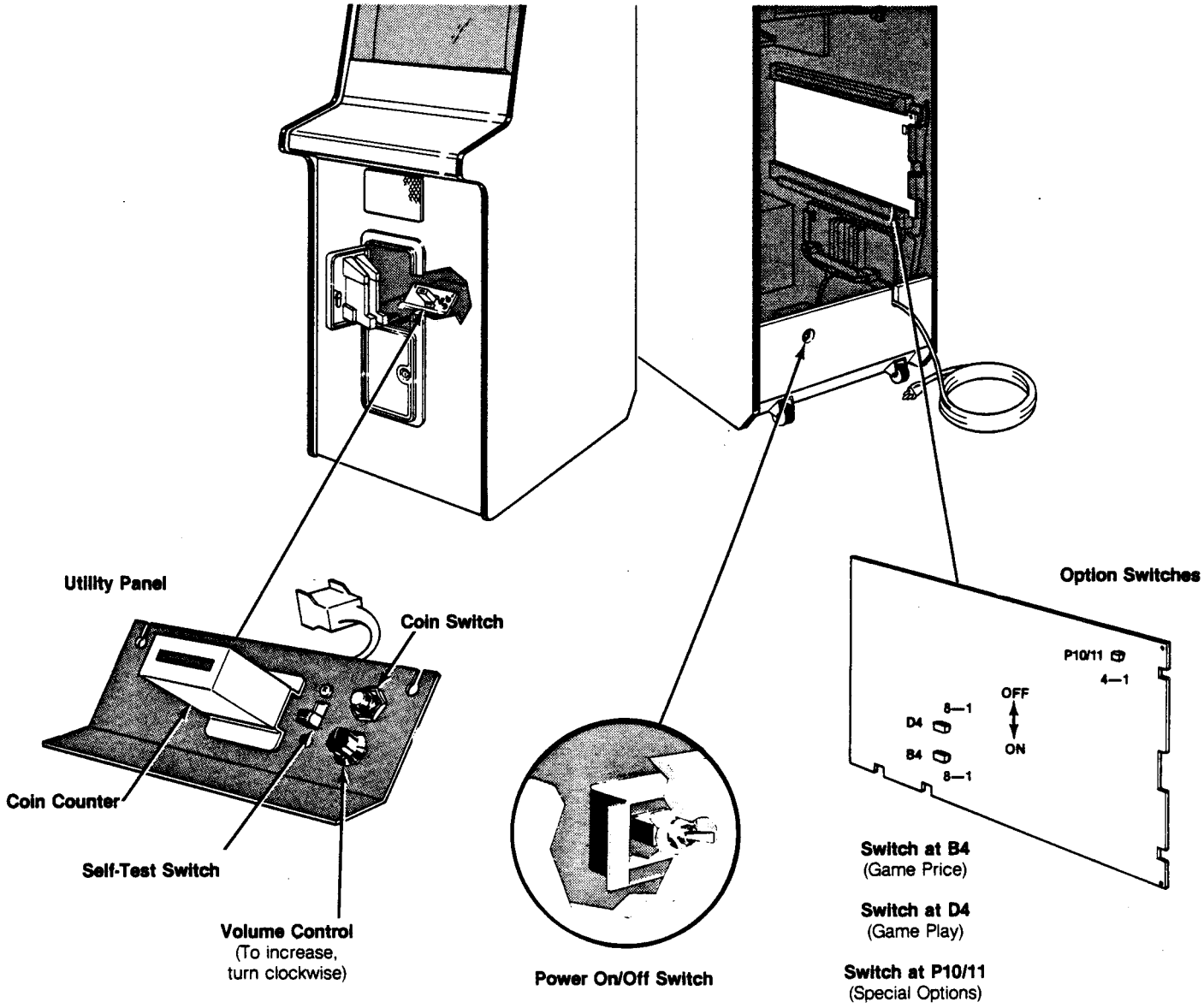

Figure 1-3 Switch Locations

G. Selecting the Options

Settings of the option switches are explained in Tables 1-2, 1-3, and 1-4. Options preset at the factory are shown by the ◄ symbol. However, you may change the settings to suit your needs.

To verify option switch settings, turn the game *off* and back *on*. Then set the self-test switch to *on* and verify the option switch settings on the self-test display as described in Chapter 2, *A. Obtaining the Operator Information Display.*

Table 1-2 describes the settings for the 8-toggle switch at location D4. This switch selects the game price options, the coin mechanism multipliers, and the bonus play options.

The *coin mechanism* is a device on the inside of the coin door that inspects the coin to determine if the correct coin has been inserted. After this inspection, the mechanism either accepts or rejects the coin.

The *multipliers* (D4 switches 4-6) determine how much each coin mechanism will be worth to the game's logic. The coin door has two mechanisms.

The basic unit of measurement is a coin worth $.25 or 1 DM, which equals a multiplier of x1. Thus, if you have a 2 DM/1 DM coin door with two coin counters, set switch 8 at location D4 to *on* and switches 5 and 6 to *off.*

You may offer bonus play for certain combinations of coins inserted into the game. For example, with the game set at $.25 per play, players who deposit four successive quarters, then press the start switch, can recieve a bonus play. The bonus feature encourages players to insert more money than just the minimum required for one game. All coins must be inserted before pressing the start switch.

Table 1-2 Switch Settings for Price Options

Settings of 8-Toggle Switch on Black Widow CPU PCB *(at D4)*								
8	7	6	5	4	3	2	1	Option
Off	Off							1 coin/1 credit◄
On	On							1 coin/2 credits
On	Off							2 coins/1 credit
Off	On							Free play
		Off	Off					Right coin mechanism x 1◄
		On	Off					Right coin mechanism x 4
		Off	On					Right coin mechanism x 5
		On	On					Right coin mechanism x 6
				Off				Left coin mechanism x 1◄
				On				Left coin mechanism x 2
					Off	Off	Off	No bonus coins (0)*◄
					Off	On	On	No bonus coins (6)
					On	On	On	No bonus coins (7)
					On	Off	Off	For every 2 coins inserted, logic adds 1 more coin (1)
					Off	On	Off	For every 4 coins inserted, logic adds 1 more coin (2)
					On	On	Off	For every 4 coins inserted, logic adds 2 more coins (3)
					Off	Off	On	For every 5 coins inserted, logic adds 1 more coin (4)
					On	Off	On	For every 3 coins inserted, logic adds 1 more coin (5)

**The numbers in parentheses will appear on the BONUS ADDER line in the Operator Information Display (Figure 2-1) for these settings.*
◄Manufacturer's recommended setting

Table 1-3 describes the settings for the 4-toggle switch at location P10/11. This switch selects whether credited coins are counted on one or on both coin counters.

Table 1-3 Switch Settings for Special Options

Settings of 4-Toggle Switch on Black Widow CPU PCB *(at P10/11)*				Option
4	3	2	1	
			On	Credits counted on one coin counter
			Off	Credits counted on two separate coin counters

Table 1-4 describes the settings for the 8-toggle switch at location B4. This switch selects the game's starting level, bonus spiders, and difficulty level.

Table 1-4 Switch Settings for Bonus and Difficulty Options

Settings of 4-Toggle Switch on Black Widow CPU PCB *(at B4)*								Option
8	7	6	5	4	3	2	1	
Off	Off							Maximum start at level 13
On	Off							Maximum start at level 21◄
Off	On							Maximum start at level 37
On	On							Maximum start at level 53
		Off	Off					3 spiders per game◄
		On	Off					4 spiders per game
		Off	On					5 spiders per game
		On	On					6 spiders per game
				Off	Off			Easy game play
				On	Off			Medium game play◄
				Off	On			Hard game play
				On	On			Demonstration mode
						Off	Off	Bonus spider every 20,000 points◄
						On	Off	Bonus spider every 30,000 points
						Off	On	Bonus spider every 40,000 points
						On	On	No bonus

◄*Manufacturer's recommended setting*

Self-Test Procedure

This game will test itself and provide data to show that the game circuitry and controls are operating properly. Self-test data is presented visually on the video display and audibly through the speakers. No additional equipment is required.

We suggest that you perform the self-test procedure when you first set up the game, each time you collect money, when you change the game options, when you erase scores and times, or when you suspect a game failure.

Chapter 2

A. Obtaining the Operator Information Display

Set the self-test switch to the on position (refer to Figure 1-3 for the location of the self-test switch). Patterns will appear on the display for a few seconds, then an operator information display will appear as shown in Figure 2-1. The operator information display shows the game statistics and certain game option information. The information display is also used to erase game scores and times as described in the following procedure.

All credits are cancelled when the self-test switch is turned on. If the message EAROM BUSY PLEASE WAIT appears, wait for it to disappear before proceeding.

NOTE

The BONUS ADDER number (0 through 7) displayed indicates the price option selected by the option switch at location D4. Refer to Table 1-2 in Chapter 1, Switch Settings for Price Options, for the price option settings represented by the BONUS ADDER number.

```
HOLD FIRE THEN PRESS START 1
        FOR TEST
    LIVES PER GAME 3
    MAX START WAVE 21
    GAMES PLAYED          1
    AVERAGE GAME TIME   124
    LEFT MECH X1
    RIGHT MECH X1
    BONUS ADDER 0
          MEDIUM
  BONUS SPIDER EVERY 20000
      1 COIN 1 PLAY
```

Figure 2-1 Operator Information Display

To Erase Scores and Times:

1. Obtain an operator information display as shown in Figure 2-1 by setting the self-test switch to the on position.
2. Press the 1-player start button until the screen displays the appropriate instruction, i.e., HOLD FIRE THEN PRESS START 1 TO (CLEAR SCORES) (CLEAR TIMES) (CLEAR TIMES AND SCORES).
3. Hold FIRE joystick forward, then press the 1-player start button. The words EAROM BUSY PLEASE WAIT will appear on the screen until the entire table is erased. Wait until the display disappears before proceeding.
4. Set the self-test switch to the off position to erase the operator information display.

B. Obtaining the Self-Test Display

The following information includes instructions for obtaining various self-test displays. These displays are provided to quickly check the game's operation and locate malfunctions in the game controls and circuitry. If there is a failure, the game produces audiovisual indications to help you find the problem.

NOTE

This procedure does not test the coin door lockout coils and coin counter. If the lockout coils do not energize when the game is on, suspect the lockout coil wiring, coin door harness, game PCB harness, latch R9, or driver Q2 of the game PCB. Troubleshoot using the game schematics.

SCREEN 1

The screen 1 display shown in Figure 2-2 is obtained by setting the self-test switch to the on position. Then hold the FIRE joystick forward and press the 1-player start button. If the test passes, the display will go blank for a few seconds before displaying screen 1. This display indicates the condition of the ROM, RAM, and three other integrated circuits.

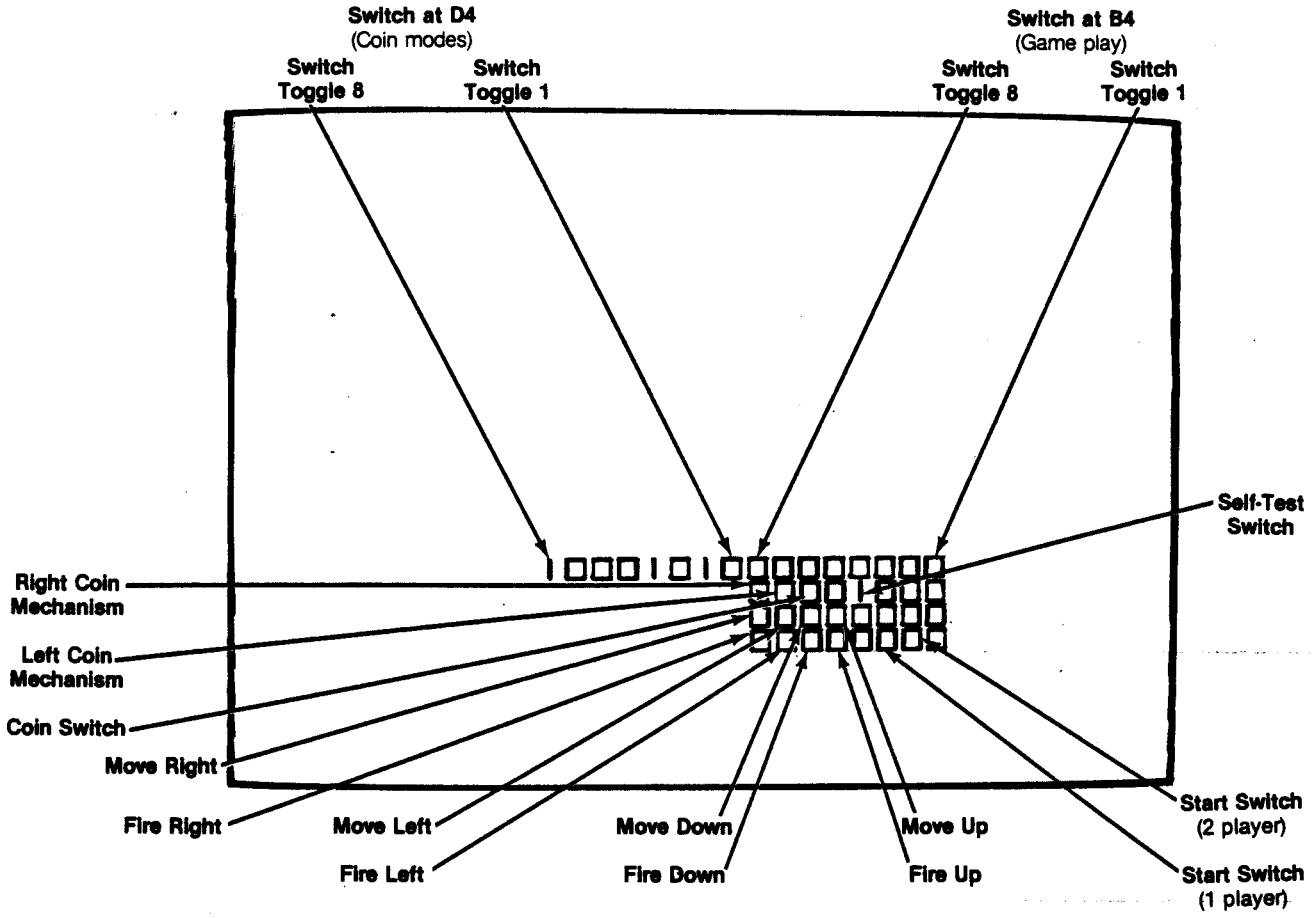

Figure 2-2 Screen 1—Test Passes

RAM failure is indicated by a sound and, if possible, an R displayed in the top center of the screen. Count the tones. One or two tones indicates RAM failure at game PCB location N/P1. Three or four tones indicate RAM failure at game PCB location K7 (see Table 2-1).

Table 2-1 RAM Locations

Number of Tones	RAM Location on Game PCB
1 or 2	N/P1
3 or 4	K7

ROM failure is indicated by one or more vertically arranged numbers displayed on the top half of the screen (see Figure 2-3). Use Table 2-2 to identify the bad ROM and determine its location.

Table 2-2 ROM Locations

Screen Display	ROM Location on Game PCB
0*	L7
1*	M/N7
2*	N/P7
3	R7
4	D1
5	E/F1
6	H1
7	J1
8	K/L1
9**	M1

**If this ROM is bad, you will hear a constant low tone and the program may be unable to display a screen image.*

***If this ROM is bad, the screen may be blank.*

EAROM or CUSTOM I/O CHIP failure is indicated by one letter in the top center of the screen. Use Table 2-3 to identify the bad IC and determine its location.

Table 2-3 EAROM and Custom I/O Chip Locations

Screen Display	Chip Location on Game PCB
E	EAROM at M2
Q	Custom I/O chip at C/D3
P	Custom I/O chip at B3

SWITCH failure is indicated by the associated 0 not changing to a 1 on the screen and no sound being produced when the switch is activated.

SOUND failure is indicated by no sound. Check the volume control on the utility panel, or troubleshoot using the game schematics.

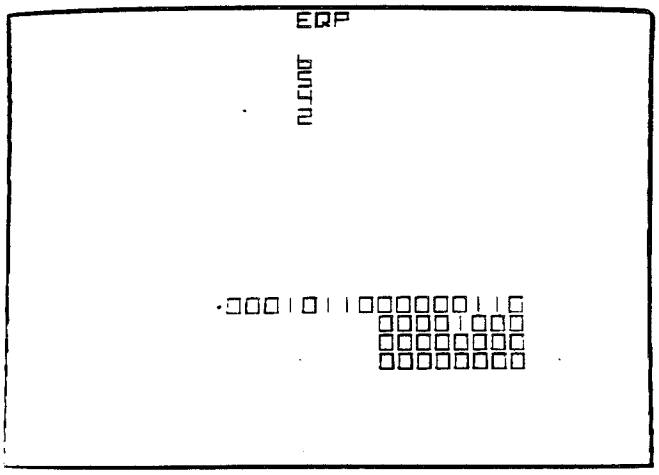

Figure 2-3 Screen 1—Test Fails

To see self-test screens 2 through 6, press the auxiliary coin switch on the utility panel once to advance to the next screen.

SCREEN 2

A white diagonal grid pattern and a complete character set appear on the screen (see Figure 2-4). The edges of the grid pattern should touch the sides of the screen. If the display is not centered, symmetrical, or the proper size, adjust the X SIZE, Y SIZE, X CTR, Y CTR, X LIN, or Y LIN potentiometers on the game PCB (refer to the Schematic Package). If the characters are incorrect, check again for a 2 displayed in the preceding ROM failure test (Screen 1).

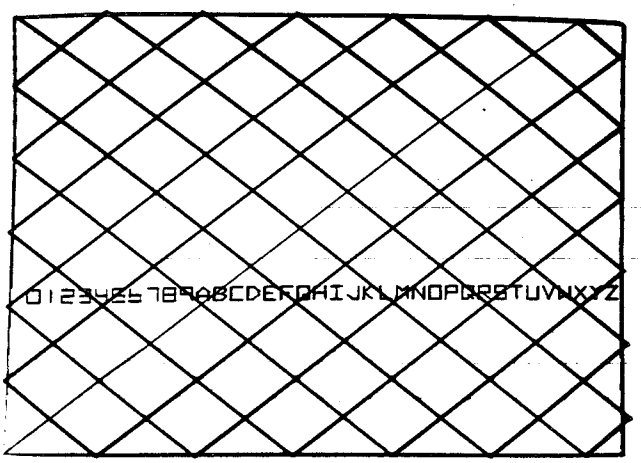

Figure 2-4 Screen 2

SCREEN 3

A white box of decreasing size appears during this test. The box should shrink smoothly. There are seven stages, each with a tone. This pattern tests the binary and linear scaling circuitry. Troubleshoot using the game schematics.

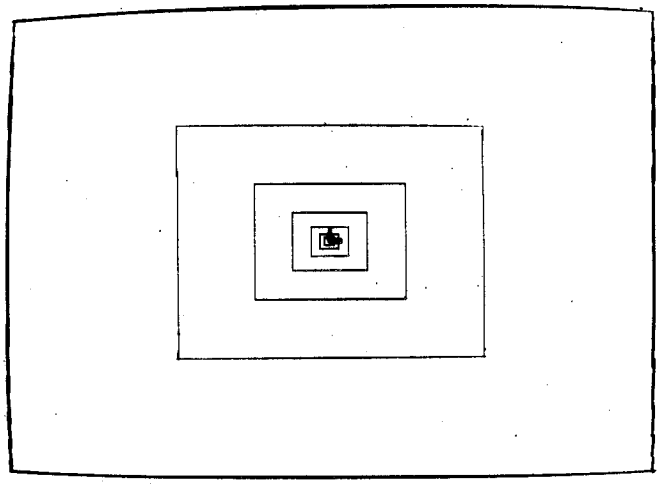

Figure 2-5 Screen 3

SCREEN 4

A series of horizontal lines are visible in the middle of the screen. This is a raster test, used by the manufacturer only, to set the color levels.

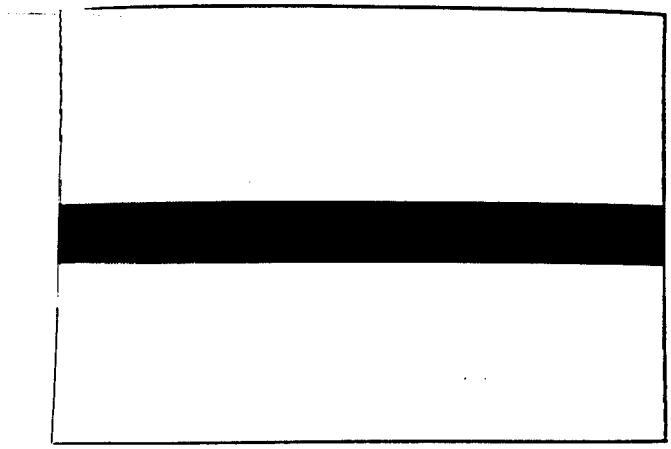

Figure 2-6 Screen 4

SCREEN 5

This test checks the seven screen colors and six intensities of each color (see Figure 2-7). If the intensities do not progress from dim at the top of each color group to bright at the bottom, suspect a problem in the Z-axis of the game PCB or the video display. Use this pattern for the display tracking adjustments (refer to the color X-Y display manual).

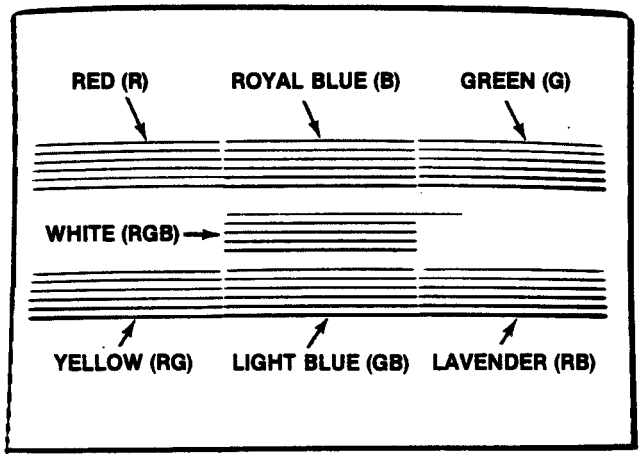

Figure 2-7 Screen 5

SCREEN 6

A grid pattern touches the corners of the video display (see Figure 2-8). Press the 1-player start button to change colors. Use this pattern for the display purity and convergence adjustments (refer to the color X-Y display manual).

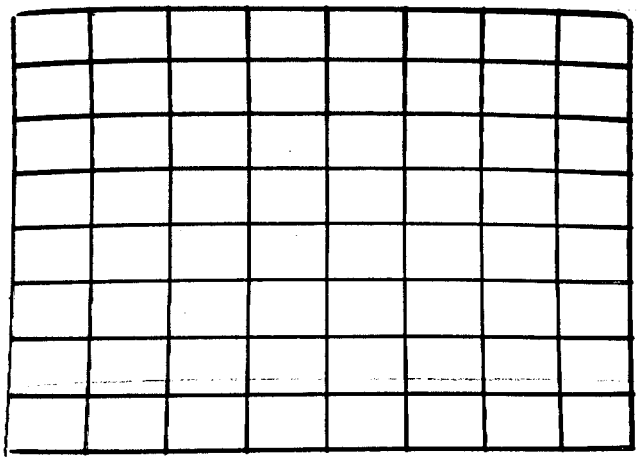

Figure 2-8 Screen 6

SCREEN 7

Screen 7 display comprises a diagnostic program controlled by switches 2, 3, and 4 of the 4-toggle option switch at location P10/11 on the game PCB. This group of switches lets you choose one of six tests. These tests provide recurring sequences to make it easy for you to troubleshoot the vector-generator circuitry. The tests and their respective option switch settings are given in Table 2-4.

To display this screen, hold the auxiliary coin switch down, then press the 2-player start button. To exit from this screen, set the self-test switch to off.

During this test, the screen will either be blank or display vectors, depending on the settings of the switches at location P10/11 on the game PCB. Figure 2-9 shows these screens.

Table 2-4 Vector-Generator Diagnostic Tests

Test	Action	Settings of 4-Position DIP Switch at P10/11 4	3	2
Test 1	Tests WDDIS every 4 msec (blank screen)	Off	Off	Off
Test 2	Tests vector-generator halt instruction every .55 msec (blank screen)	On	Off	Off
Test 3	Tests vector-generator long vector (and halt instruction) every 8.2 msec	Off	On	Off
Test 4	Tests vector-generator jump instruction (and long vector and halt instruction) every 8.2 msec	On	On	Off
Test 5	Tests vector-generator short vector instruction (and all of Test 4) every 8.6 msec	Off	Off	On
Test 6	Tests vector-generator JSRL/RTSL instruction (and all of Test 5) every 10.2 msec	On	Off	On
Test 2	Blank screen	Off	On	On
Test 2	Blank screen	On	On	On

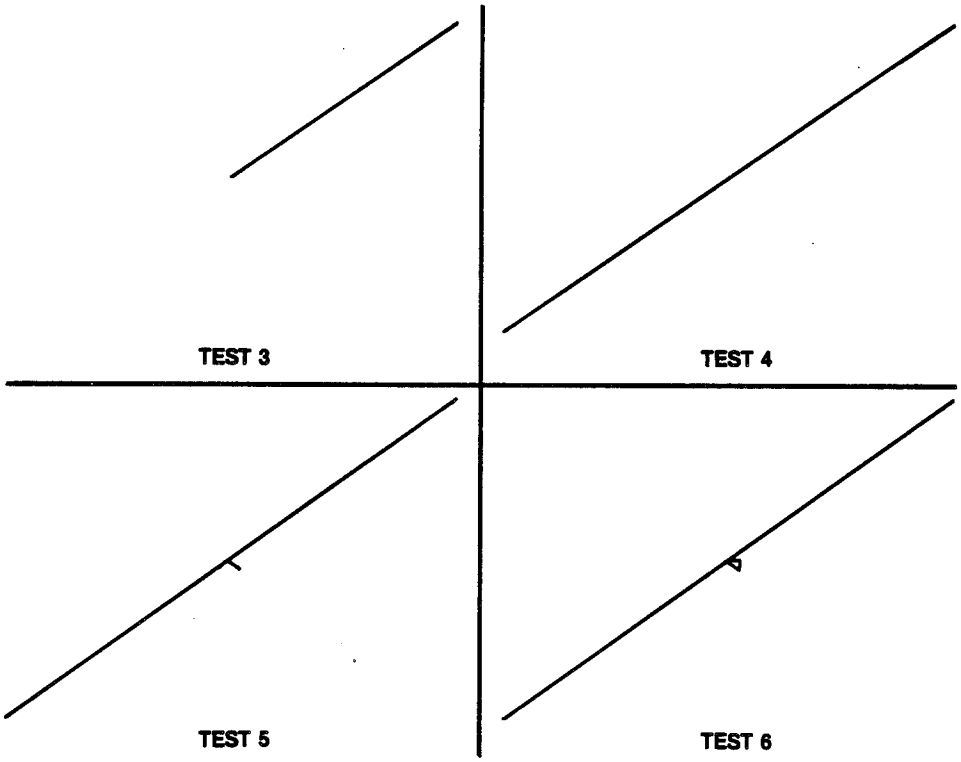

Figure 2-9 Screen 7—Diagnostic Program Displays

Illustrated Parts Lists

This chapter provides information to order parts for your game. Common hardware (screws, nuts, washers, etc.) has been deleted from most of the parts lists. However, a parts list for the hardware needed to mount the game and Regulator/Audio II printed-circuit boards to the cabinet has been included.

The PCB parts lists are arranged in alphabetical order by component type. Each component subsection is arranged alphanumerically by reference designator.

Other parts lists are arranged alphanumerically by Atari part number. In these parts lists, all A- prefix numbers come first. Following these are numbers in sequence evaluated up to the hyphen, namely 00- through 99- then 000598- through approximately 201000-.

When ordering parts, please give the part number, part name, number of this manual, and serial number of your game (see Figure 1-1 for locations of serial numbers.) This will aid in filling your order rapidly and correctly. We hope the results will be less downtime and more profit from your game.

Atari Customer Service numbers are listed on the inside front cover of this manual for your convenience.

Chapter 3

A. Cabinet-Mounted Assemblies

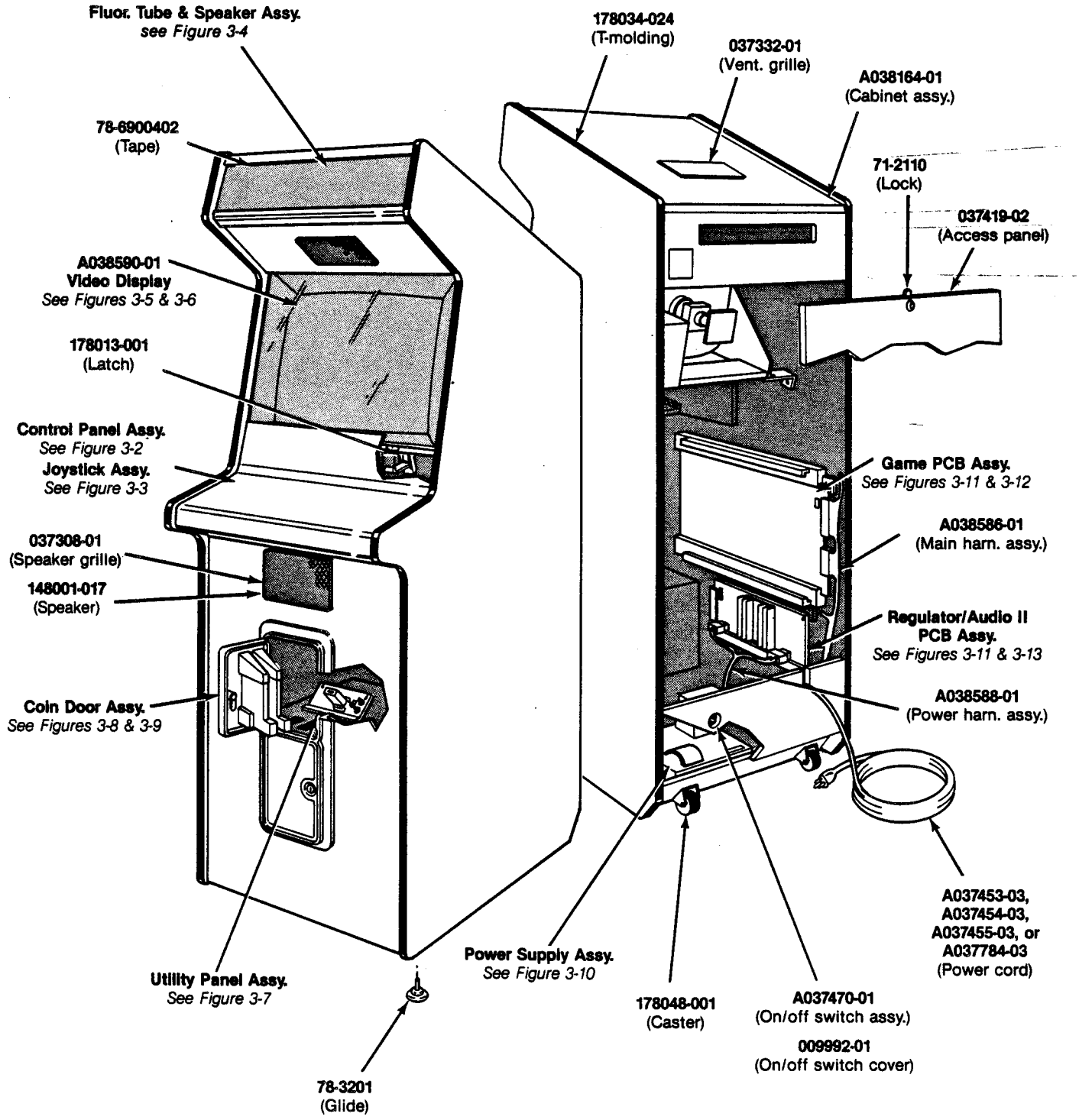

Figure 3-1 Cabinet-Mounted Assemblies

Cabinet-Mounted Assemblies
Parts List

Part No.	*Description*
A002465-01	Coin Counter
A037453-03	Strain-Relief Power Cord *(U.S. and Canada)*
A037455-03	Strain-Relief Power Cord *(Australia and New Zealand)*
A037470-01	Power On/Off Switch/Mounting Plate Assembly
A037784-03	Strain-Relief Power Cord *(United Kingdom, Ireland, Lebanon, Saudi Arabia, India, Hong Kong, Singapore, Egypt, Nigeria, Republic of South Africa, Zimbabwe)*
A038164-01	Cabinet Assembly *(includes glides and PCB retainers, but not the rear access panel)*
A038586	Main Harness Assembly
A038588-01	Power Harness Assembly
A038590-01	19-Inch Wells-Gardner Color X-Y Video Display Assembly
A039990-01	Main Conversion Harness Assembly *(not shown)*
	The following four items are the technical information supplements to this game:
SP-234	Black Widow Schematic Package
ST-234-01	Black Widow Label with Self-Test Procedure and Option Switch Settings
TM-183	Service Manual for 19-Inch Wells Gardner Color X-Y Display
TM-234	Black Widow Operators Manual
71-2110	Lock Mechanism *(for rear access panel)*
78-3201	Adjustable Glide
78-6900402	Vinyl Foam Single-Coated Adhesive Tape, ¼-Inch Wide x ⅛-Inch Thick
009992-01	On/Off Switch Cover
037308-01	Speaker Grille
037332-01	Ventilation Grille
037419-02	Rear Access Panel *(does not include lock)*
038091-01	Molded Coin Box *Acceptable substitute is part no. A037491-01*
178013	Spring Draw Latch
178034-024	¾-Inch Black Plastic T-Molding
178048-001	2-Inch Rigid Caster

B. Control Panel Assembly

WARNING

Players may receive an electrical shock if this control panel is not properly grounded! After servicing any parts on the panel, check that the ground wire is firmly attached to the metal tab on the inside of the control panel. Only then should you lock up the game.

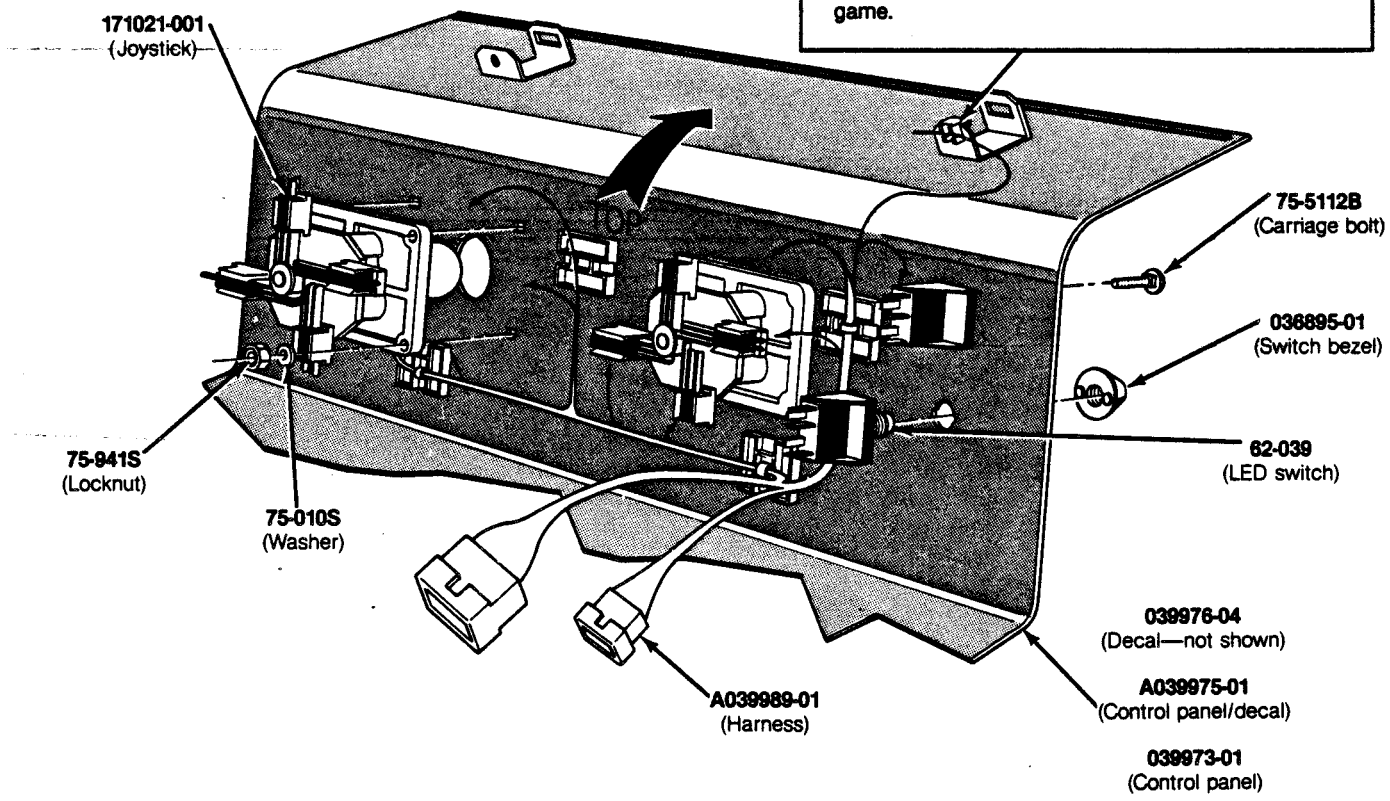

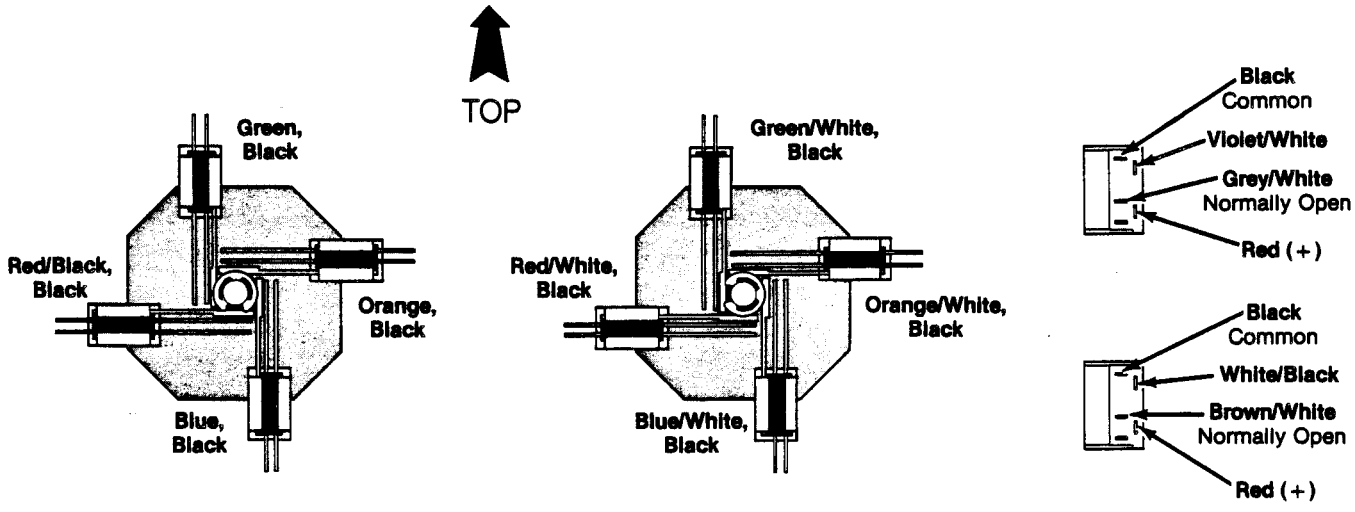

Figure 3-2 Control Panel Assembly A039974-01 A

Control Panel Assembly
Parts List

Part No.	*Description*
A039975-01	Control Panel with Decal
A039989-01	Control Panel Harness Assembly
62-039	SPDT Momentary Pushbutton Start Switch with Red Light-Emitting Diode
75-010S	#10 Flat Washer
75-941S	#10-24 Hexagonal Locknut
75-5112B	#10-24 x ¾-Inch Black Carriage Bolt
78-6900402	Vinyl Foam Single-Coated Adhesive Tape, ¼-Inch Wide x ⅛-Inch Thick
036895-01	Black Molded Switch Bezel
039973-01	Control Panel
039976-04	Control Panel Decal
171021-001	8-Position Joystick

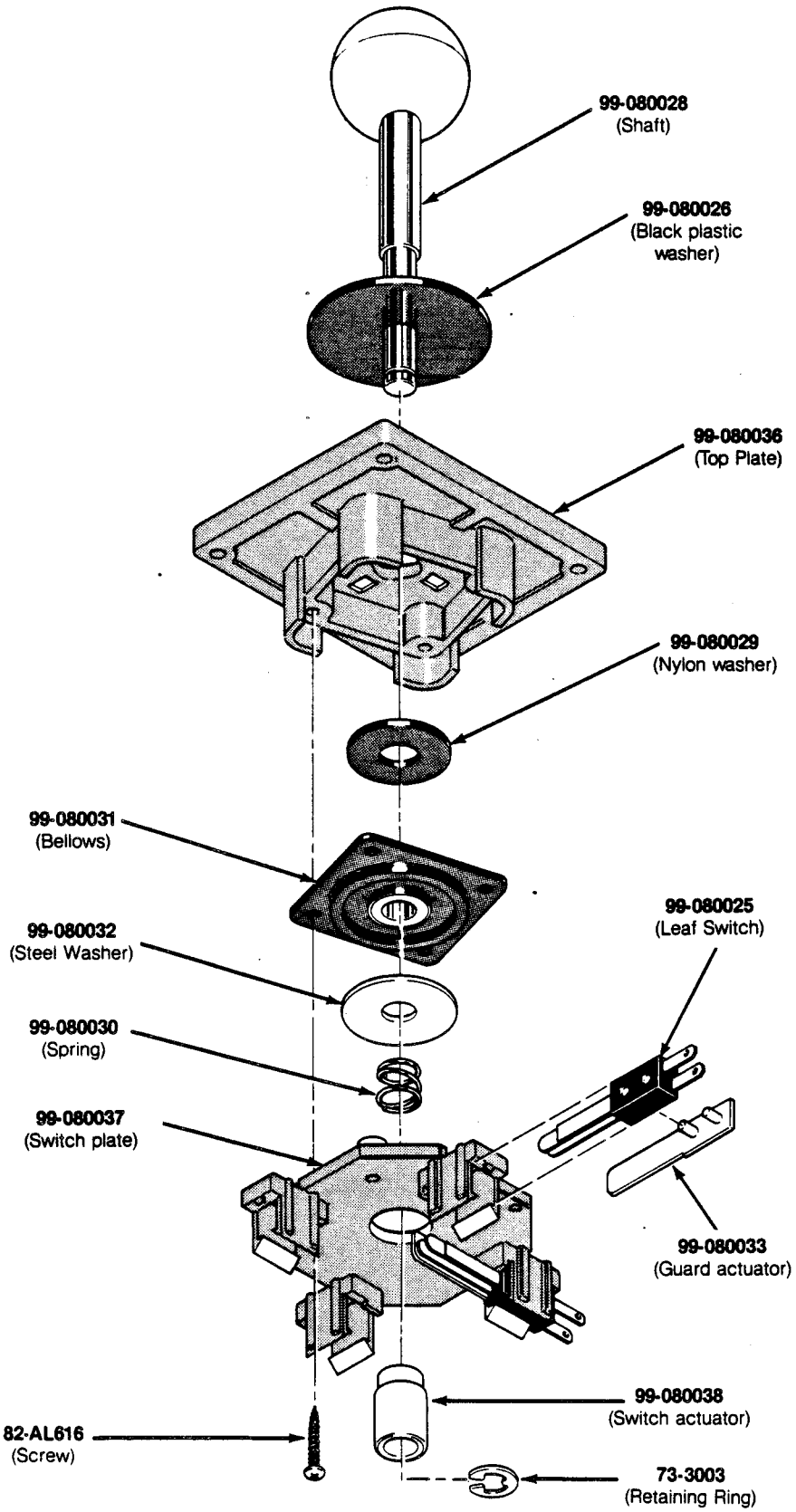

Figure 3-3 8-Position Joystick Assembly 171021-001

8-Position Joystick Assembly
Parts List

Part No.	*Description*
73-3003	Retaining Ring
82-AL616	#6 x 1-Inch Cross-Recessed Pan-Head Type BT Self-Tapping Steel Screw
99-080025	Leaf Switch
99-080026	2-Inch Black Plastic Washer
99-080028	Metal Shaft
99-080029	Nylon Washer
99-080030	Spring
99-080031	Bellows
99-080032	Flat Steel Washer
99-080033	Plastic Guard/Actuator
99-080036	Top Plate
99-080037	Switch Mounting Plate
99-080038	Nylon Switch Actuator

C. Fluorescent Tube and Speaker

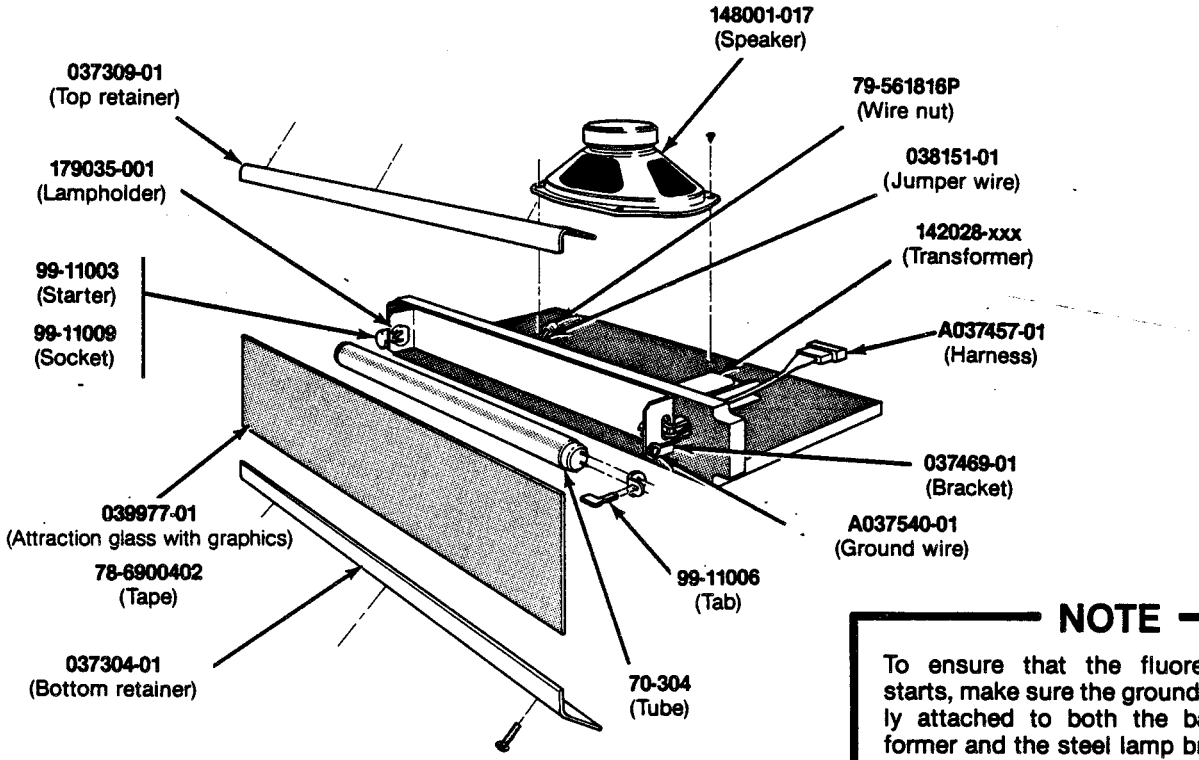

NOTE

To ensure that the fluorescent tube starts, make sure the ground wire is firmly attached to both the ballast transformer and the steel lamp bracket.

Figure 3-4 Fluorescent Tube and Speaker A038161-01 & -02 A Parts List

Part No.	*Description*
A037457-01	Tube and Speaker Harness Assembly
A037540-01	Ground Wire with Ring Lug
70-304	18-Inch, 15-W, Cool White Fluorescent Tube
78-6900402	Vinyl Foam Single-Coated Adhesive Tape, ¼-inch Wide x ⅛ inch Thick
79-561816P	Spring-Connector Wire Nut for 16- to 18-Gauge Wires
99-11003	Fluorescent Lamp Starter
99-11006	Fluorescent Lamp Locking Tab *(tab consists of two pieces)*
99-11009	Starter Socket
037304-01	Bottom Attraction Glass Retainer
037309-01	Top Attraction Glass Retainer
037469-01	Steel Lamp Bracket
038151-01	15-Inch Jumper Wire
039977-01	Attraction Glass with Graphics
142028-001	60 Hz, 118 V, Ballast Transformer *(used on A038161-01 assembly)*
142028-002	50 Hz, 118 V, Ballast Transformer *(used on A038161-02 assembly)*
148001-017	6 x 9-Inch, 8Ω, 6-Ounce Oval Shielded High-Fidelity Speaker
179035-001	2-Pin Fluorescent Lampholder

D. Video Displays

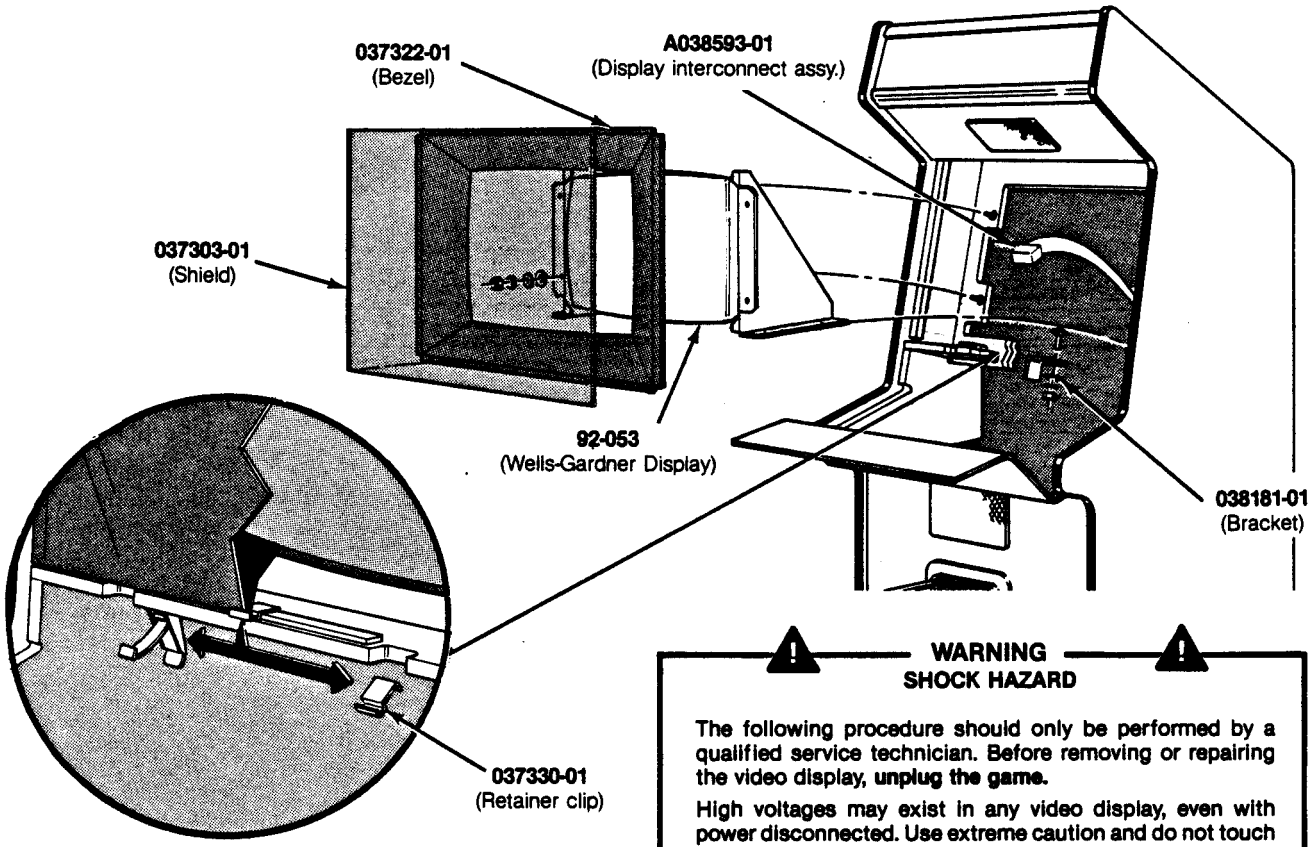

WARNING
SHOCK HAZARD

The following procedure should only be performed by a qualified service technician. Before removing or repairing the video display, **unplug the game.**

High voltages may exist in any video display, even with power disconnected. Use extreme caution and do not touch electrical parts of the display yoke area with your hands or with metal objects in your hands!

Discharge the high voltage from the cathode-ray tube as follows:

Attach one end of a large, well-insulated, 18-gauge jumper to ground. Momentarily touch the free end of the grounded jumper to the anode by sliding it under the anode cap. Wait two minutes and discharge the anode again.

IMPLOSION HAZARD

If you drop the display and the picture tube breaks, *it will implode!* Shattered glass can fly six feet or more from the implosion. Use care when replacing any display.

Figure 3-5 Wells-Gardner Video Display Parts List

Part No.	*Description*
A038593-01	Wells-Gardner Interconnect Assembly
92-053	19-Inch Wells-Gardner Color X-Y CRT
038181-01	Video Display Support Bracket
037303-01	Display Shield
037322-01	Display Bezel
037330-01	Display Shield Retainer Clip
038184-01	Static Shield

WARNING
SHOCK HAZARD

The following procedure should only be performed by a qualified service technician. Before removing or repairing the video display, **unplug the game.**

High voltages may exist in any video display, even with power disconnected. Use extreme caution and do not touch electrical parts of the display yoke area with your hands or with metal objects in your hands!

Discharge the high voltage from the cathode-ray tube as follows:

Attach one end of a large, well-insulated, 18-gauge jumper to ground. Momentarily touch the free end of the grounded jumper to the anode by sliding it under the anode cap. Wait two minutes and discharge the anode again.

IMPLOSION HAZARD

If you drop the display and the picture tube breaks, *it will implode!* Shattered glass can fly six feet or more from the implosion. Use care when replacing any display.

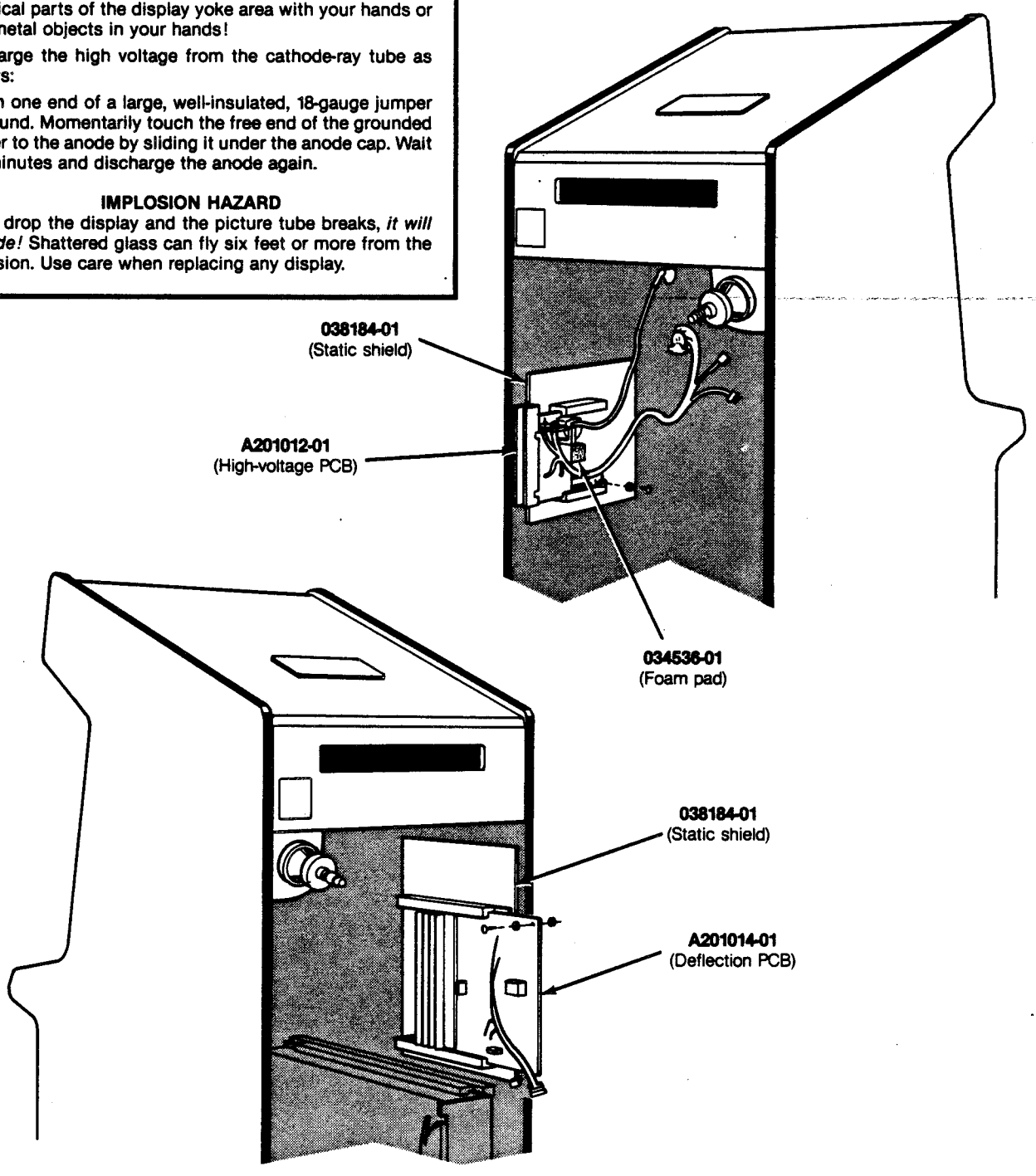

Figure 3-6 Amplifone Video Display

NOTE

Amplifone CRT (A201001-01) and Deflection PCB (A201014-01) are shipped as a matched, calibrated pair and should be used as such.

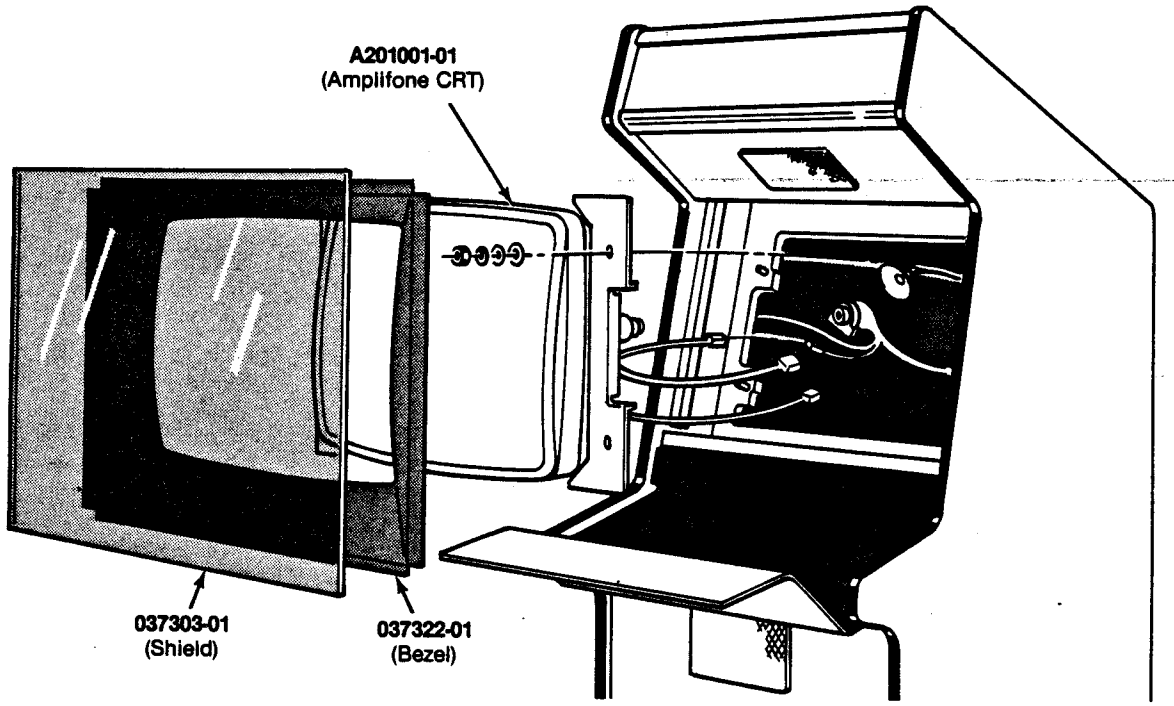

Figure 3-6 Amplifone Video Display Parts List

Part No.	*Description (Reference Designations and Locations in Bold)*
	Amplifone Display Assembly A200000-01
A201001-01	19-Inch Amplifone Color X-Y CRT
A201012-01	High-Voltage PCB
A201014-01	Deflection PCB
034536-02	Foam Pad *(used with High-Voltage and Deflection PCBs)*
037303-01	Display Shield
037322-01	Display Bezel
037330-01	Display Shield Retainer Clip
038184-01	Static Shield

E. Utility Panel Assembly

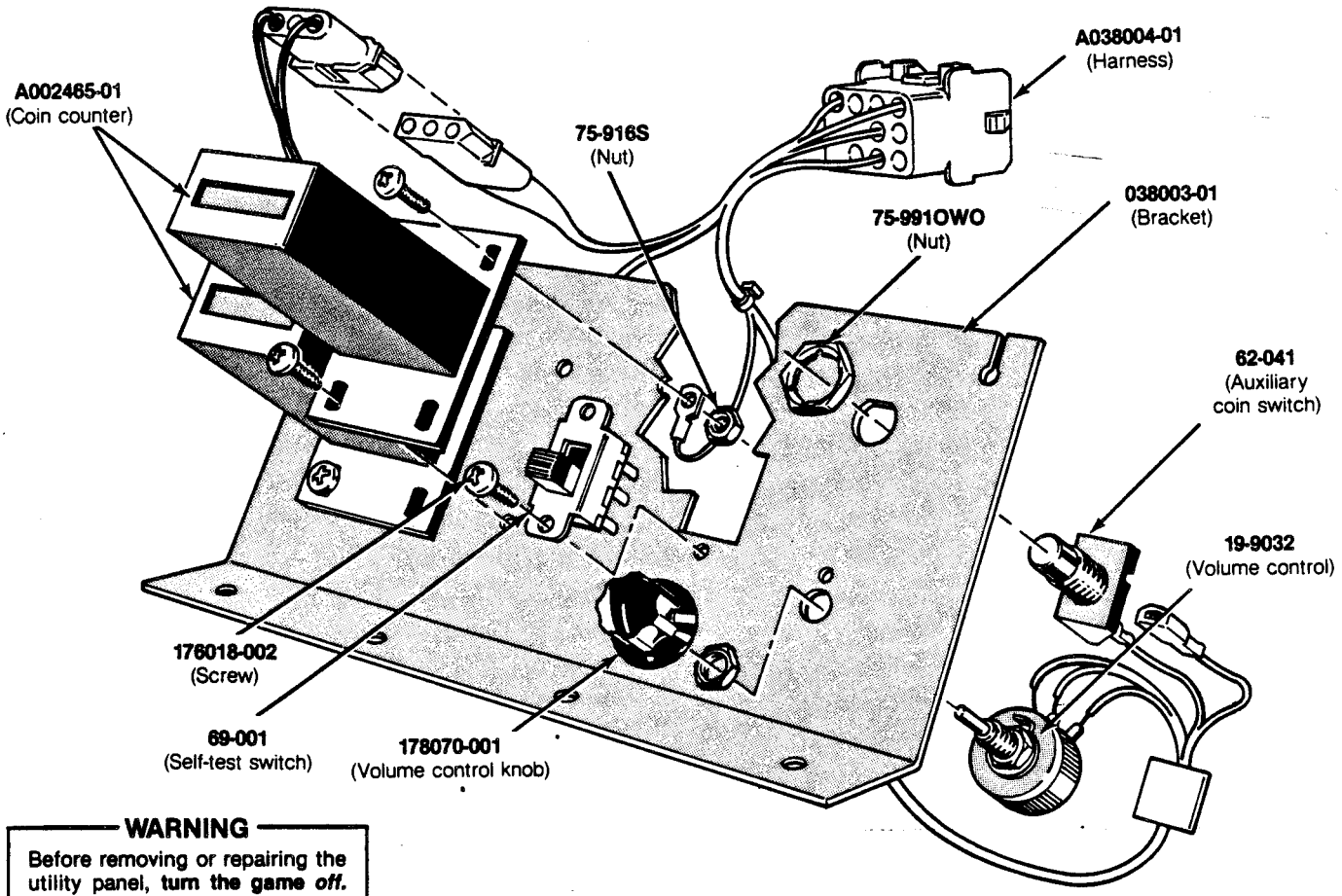

WARNING

Before removing or repairing the utility panel, **turn the game *off.*** Players may receive an electrical shock if the utility panel is not properly grounded! After servicing any parts on the panel, make sure that the ground wire is firmly attached to the metal screw on the back of the coin counter.

Figure 3-7 Utility Panel Assembly

Parts List

Part No.	*Description*
A002465-01	6 V Coin Counter
A038004-01	Utility Panel Harness
19-9032	Volume Control
62-041	SPDT Momentary-Contact Pushbutton Auxiliary Coin Switch with Black Cap
69-001	DPDT Self-Test Switch
75-916S	#6-32 Standard Machine Nut
038003-01	Utility Panel
75-9910W0	15/32-32 Stamped Nut
176018-002	#6-32 x ½-Inch Pan Head Machine Screw
178070-001	Volume Control Knob

F. Coin Door Assemblies

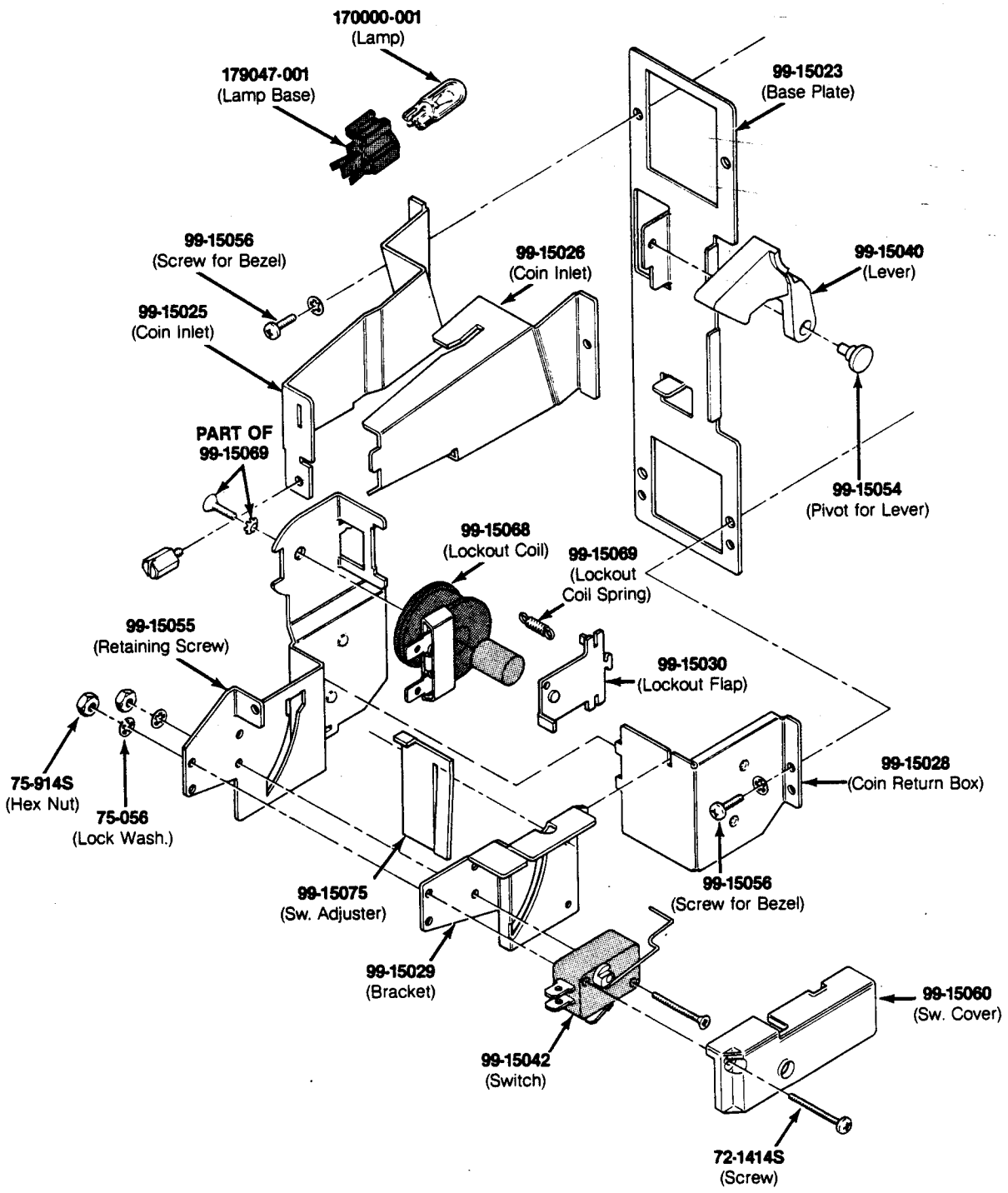

Figure 3-8 Vertically Mounted Coin Door A037619-xxx D

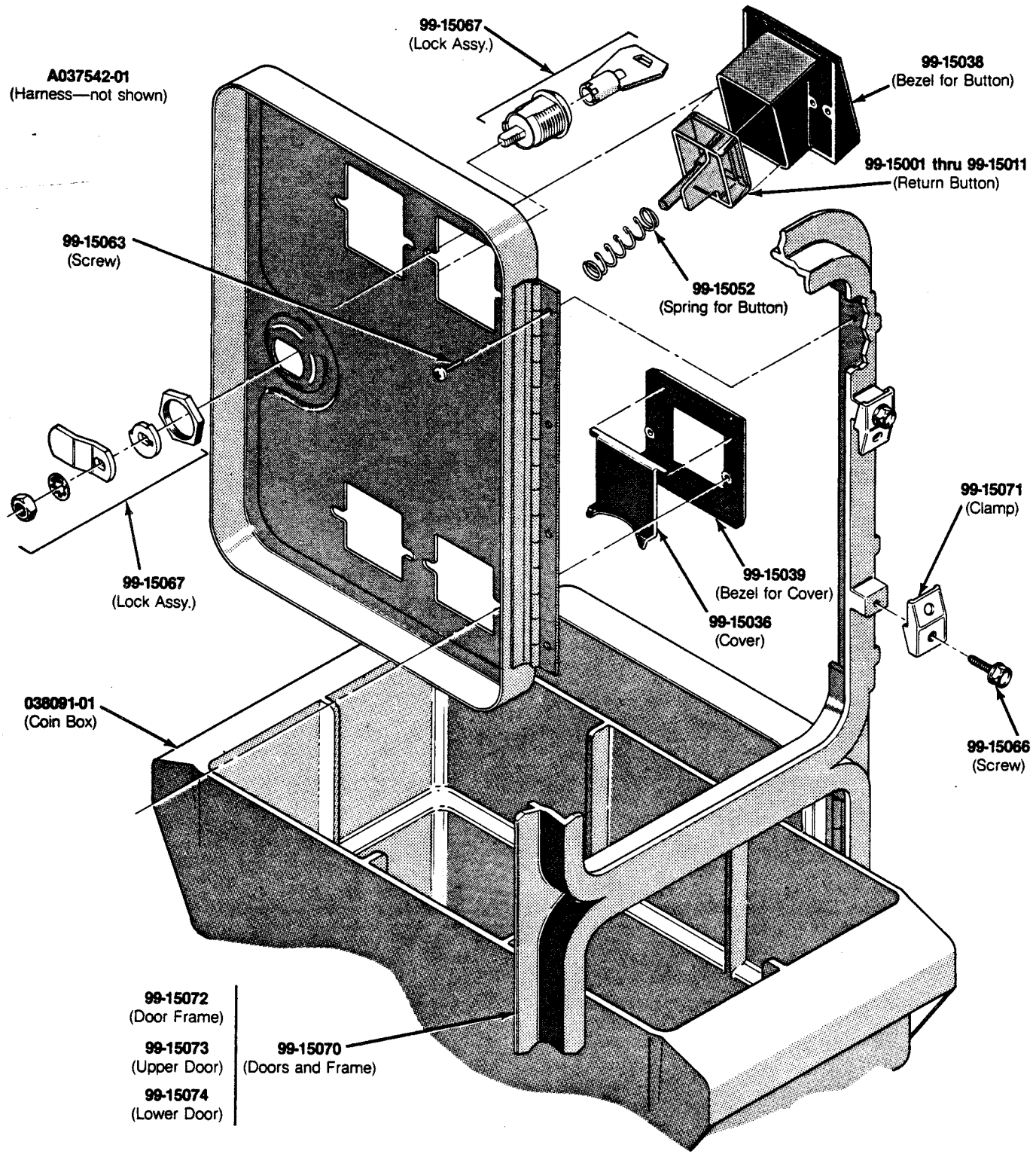

A037619-01 — U.S. 25¢/25¢ Coin Door
A037619-02 — U.S. 50¢/50¢ Coin Door
A037619-03 — Canadian 25¢/25¢ Coin Door
A037619-04 — British 10 P/10 P Coin Door
A037619-05 — British 10 P/50 P Coin Door
A037619-06 — British 20 P/50 P Coin Door
A037619-07 — Australian 20¢/20¢ Coin Door
A037619-08 — German 1 DM/1 DM Coin Door
A037619-09 — German 2 DM/1 DM Coin Door
A037619-10 — German 2 DM/5 DM Coin Door
A037619-11 — German 1 DM/5 DM Coin Door
A037619-12 — 5 Fr/5 Fr Coin Door
A037619-13 — Swiss 1 Fr/1 Fr Coin Door
A037619-14 — French 1 Fr/1 Fr Coin Door
A037619-15 — French 2 Fr/1 Fr Coin Door
A037619-16 — Swedish 1 Kr/1 Kr Coin Door
A037619-17 — Spanish 25 Pts/25 Pts Coin Door
A037619-18 — Italian 100 L/100 L Coin Door
A037619-19 — Hong Kong $1/$1 Coin Door
A037619-20 — Japanese 100Y/100Y Coin Door

Figure 3-8 Vertically Mounted Coin Door, continued
A037619-xxx D

Vertically Mounted Coin Door
Parts List

Part No.	*Description*
A037542-01	Harness Assembly
72-1414S	#4-40 × 7/8-Inch Cross-Recessed Pan-Head Steel Machine Screw
75-056	#6 Internal-Tooth Zinc-Plated Steel Lock Washer
75-914S	#4-40 Steel Machine Hex Nut
75-3414S	#4-40 × 7/8-Inch 82° Cross-Recessed Flat-Head Steel Machine Screw
99-15001	Coin Return Button with U.S. 25¢ Price Plate
99-15002	Coin Return Button with U.S. $1 Price Plate
99-15003	Coin Return Button with German 1 DM Price Plate
99-15004	Coin Return Button with German 2 DM Price Plate
99-15005	Coin Return Button with German 5 DM Price Plate
99-15006	Coin Return Button with Belgian 5 Fr Price Plate
99-15007	Coin Return Button with French 1 Fr Price Plate
99-15008	Coin Return Button with Japanese 100 Yen Price Plate
99-15009	Coin Return Button with British 10 Pence Price Plate
99-15010	Coin Return Button with Australian 20¢ Price Plate
99-15011	Coin Return Button with Italian 100 Lire Price Plate
99-15023	Base Plate
99-15025	Left Half of Coin Inlet
99-15026	Right Half of Coin Inlet
99-15027	Side Plate of Coin Return Box
99-15028	Base Plate of Coin Return Box
99-15029	Switch Bracket
99-15030	Flap for Lockout Coil *(U.S. 25¢)*
99-15036	Metal Coin Return Cover
99-15038	Bezel for Coin Return Button
99-15039	Metal Bezel for Coin Return Cover
99-15040	Coin Return Lever
99-15042	Coin Switch for U.S. 25¢
99-15052	Spring for Coin Return Button
99-15054	Pivot for Coin Return Lever
99-15055	Retaining Screw
99-15056	#4-40 × 5/16-Inch Cross-Recessed Pan-Head Steel Machine Screw
99-15060	Switch Cover
99-15063	Screw for Hinge
99-15066	Screw for Clamp
99-15067	Lock Assembly
99-15068	Lockout Coil
99-15069	Spring for Lockout Coil
99-15070	Doors and Frame
99-15071	Clamp for Frame
99-15072	Door Frame
99-15073	Upper Door
99-15074	Lower Door
99-15075	Switch Adjuster
038091-01	Coin Box *(Not included in assembly) Acceptable substitute is part number A037491-01*
170000-001	6.3V Miniature Wedge-Base Incandescent Lamp
171006-035	Metal Coin Mechanism
179047-001	Lamp Base

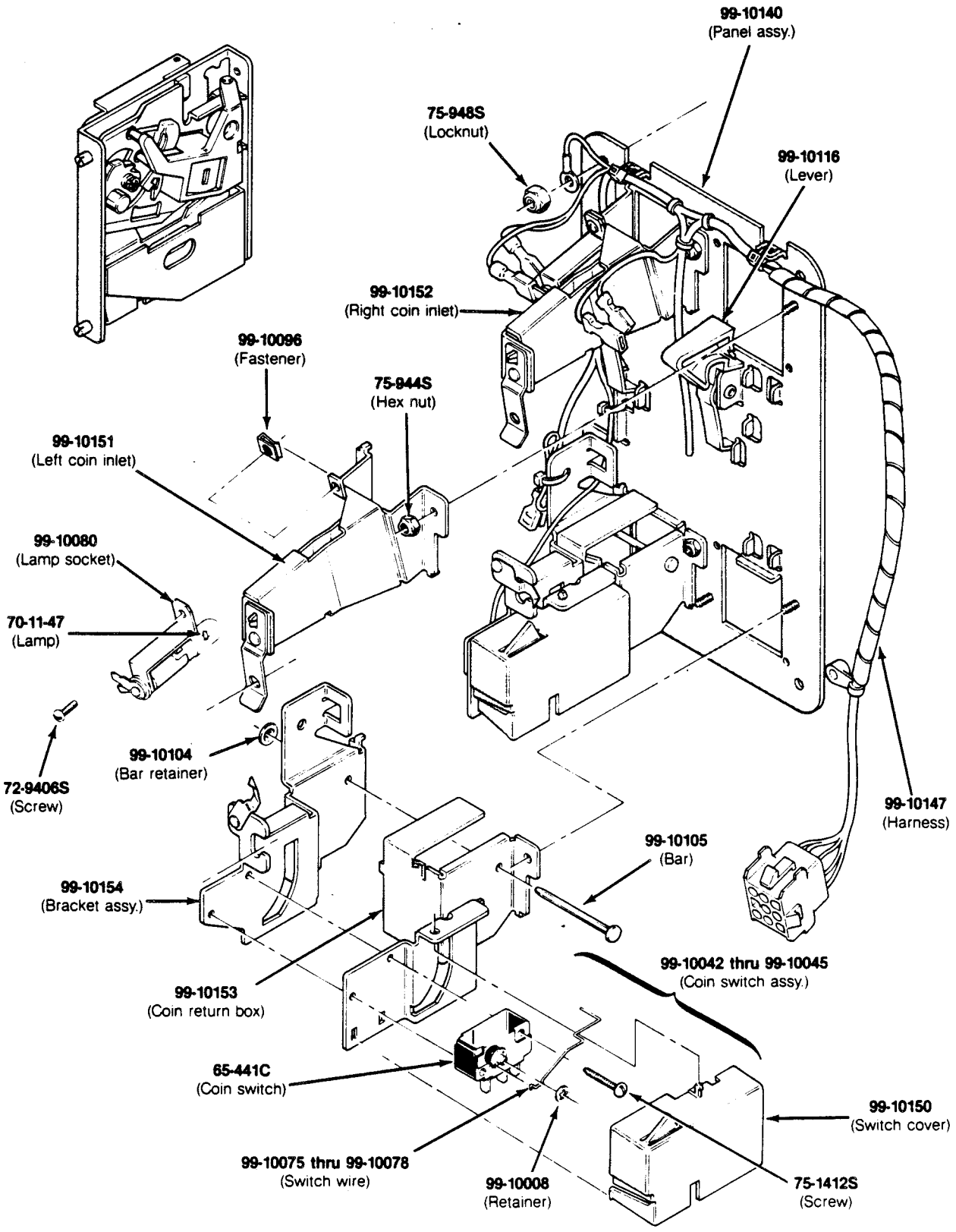

Figure 3-9 American-Made Coin Door Assembly 171027-001 A

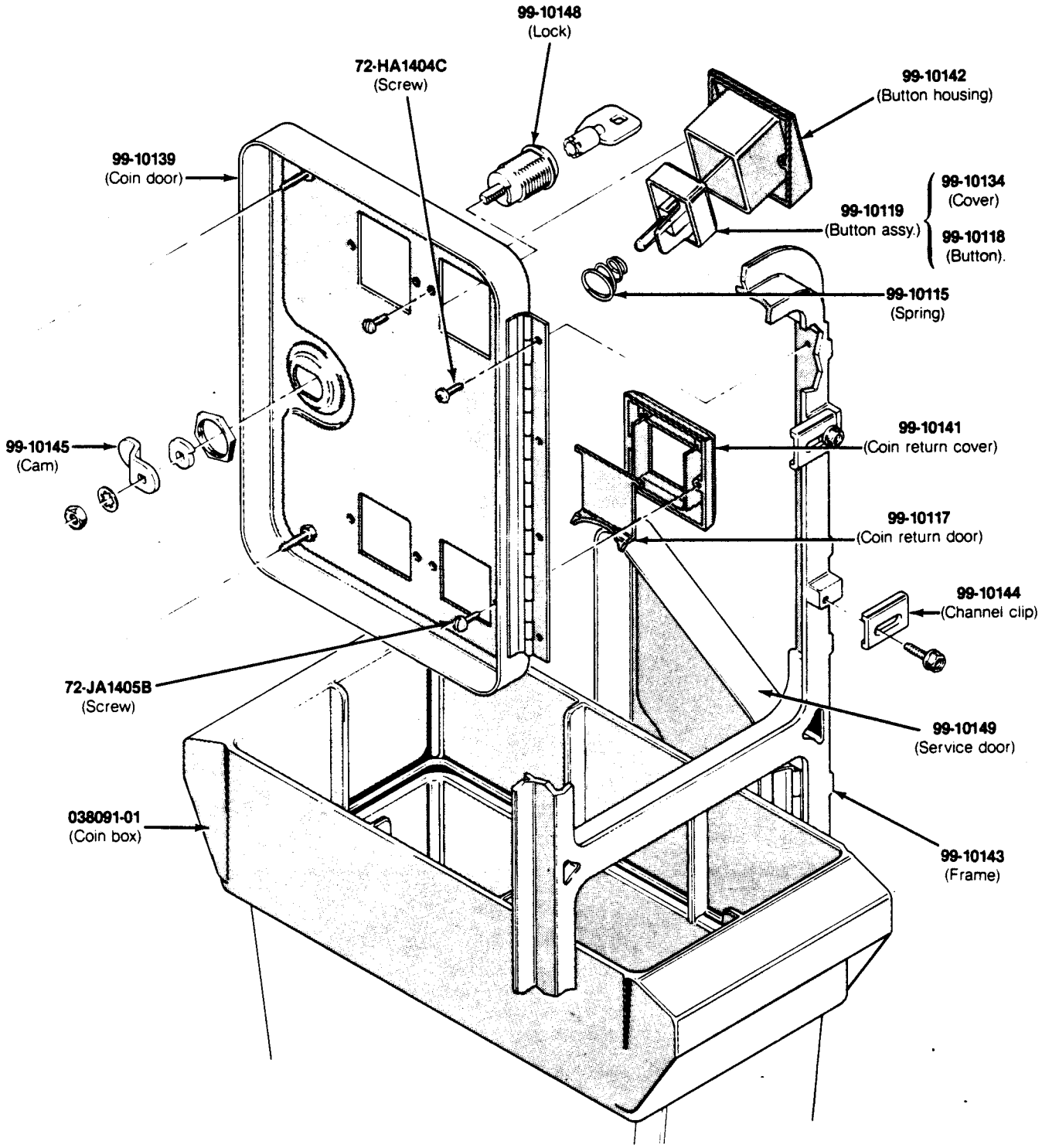

Figure 3-9 American-Made Coin Door Assembly, continued
171027-001 A

American-Made Coin Door Assembly
Parts List

Part No.	*Description*
171006-035	Metal Coin Mechanism for U.S. $.25
65-441C	Coin Switch
70-11-47	Miniature Bayonet Lamp
72-9406S	#4-40 x⅜-Inch Truss-Head Screw
72-HA1404C	#4-40 x ¼-Inch Pan-Head Screw
72-JA1405B	#4-40 x .31-Inch Pan-Head Screw
75-1412S	#4-40 x ¾-Inch Pan-Head Screw
75-944S	#4-40 Locknut
99-10008	Retainer
99-10042	Coin Switch Assembly for Belgian 5 Fr and U.S. $.25
99-10043	Coin Switch Assembly for German 1 DM, Japanese 100 Yen, Swiss 1 Fr
99-10044	Coin Switch Assembly for German 2 DM, Italian 100 L, U.S. $1.00
99-10045	Coin Switch Assembly for Australian $.20, German 5 DM, British 10 P
99-10068	Coin Return Chute
99-10075	Switch wire (included in coin switch assembly)
99-10076	Switch wire (included in coin switch assembly)
99-10077	Switch wire (included in coin switch assembly)
99-10078	Switch wire (included in coin switch assembly)
99-10080	Lamp socket
99-10081	Key holder
99-10096	Fastener
99-10104	Bar retainer
99-10105	Bar
99-10115	Spring
99-10116	Plastic Coin Return Lever
99-10117	Steel Coin Return Door
99-10118	Amber Coin Return Button
99-10119	Amber Coin Button for U.S. $.25
99-10134	Coin Button Cover
99-10139	Coin Door
99-10140	Coin Door Inner-Panel Assembly
99-10141	Diecast Coin Return Cover
99-10142	Diecast Button Housing
99-10143	Coin Door Frame
99-10144	Coin Door Channel Clip
99-10145	Offset Cam
99-10146	Coin Inlet Chute Assembly
99-10147	American-Made Coin Door Harness
99-10148	Lock Assembly
99-10149	Service Door
99-10150	Switch Cover
99-10151	Left Coin Inlet
99-10152	Right Coin Inlet
99-10153	Coin Return Box
99-10154	Bracket Assembly

G. Power Supply Assembly

WARNING

Fuse cover must be in place during game operation.

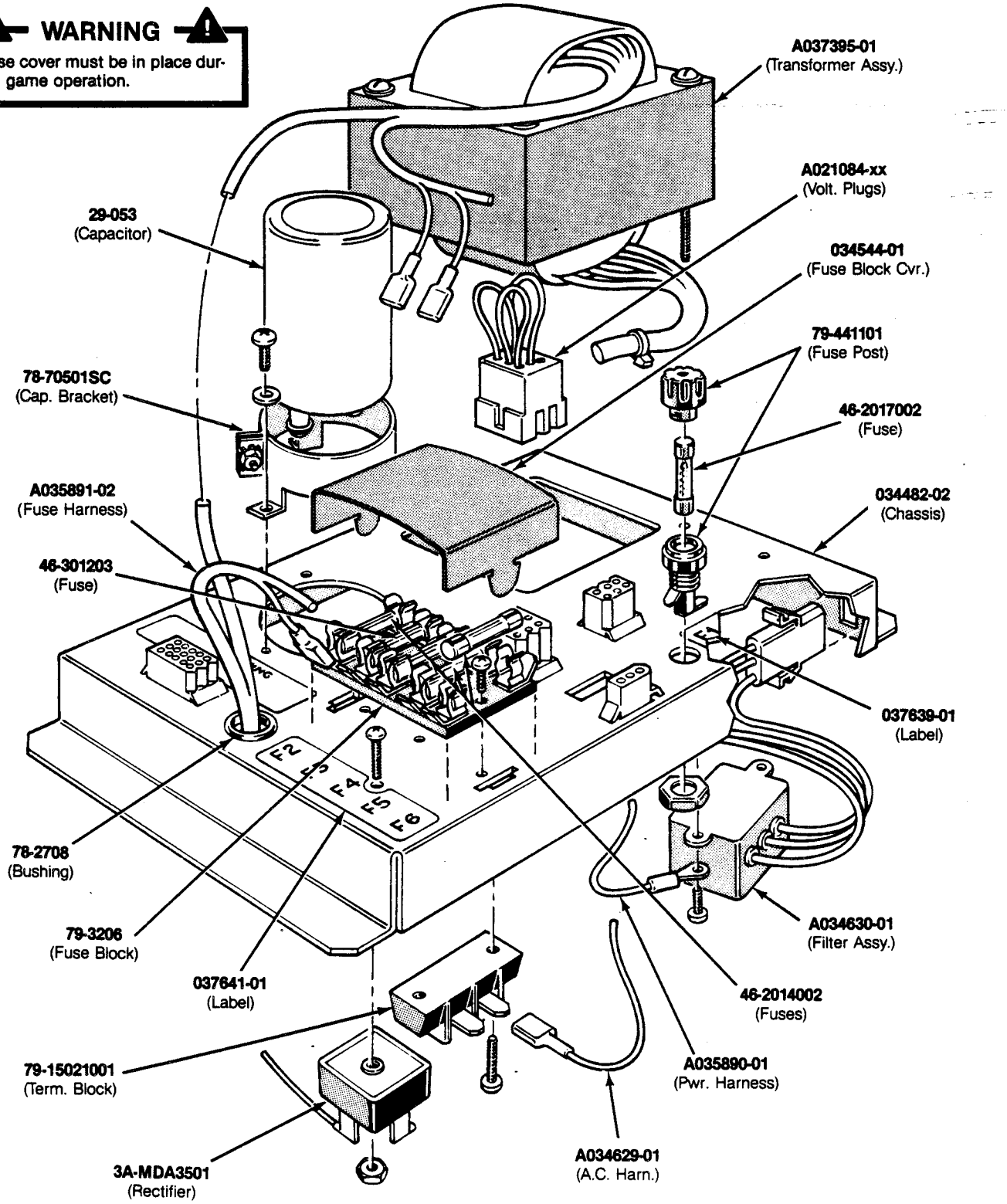

Figure 3-10 Color X-Y Power Supply Assembly A037396-xx D

Color X-Y Power Supply Assembly Parts List

Part No.	*Description (Reference Designations in Bold)*
A021084-01	Voltage Plug for 100 V *(violet)*
A021084-02	Voltage Plug for 120 V *(yellow)*
A021084-04	Voltage Plug for 220 V *(blue)*
A021084-05	Voltage Plug for 240 V *(brown)*
A034629-01	AC Harness Assembly
A034630-01	RFI Filter Assembly **(FL1)**
A035890-01	Power Harness Assembly
A035891-02	Fuse Harness Assembly
A037395-01	Color X-Y Transformer Assembly **(T1)**
29-053	27,000 µF 15 VDC Electrolytic Capacitor **(C1)**
3A-MDA3501	Type-MDA 3501 Bridge Rectifier **(CR1)**
46-2014002	4 A, 250 V, 3AG Slow-Blow Glass Cartridge-Type Fuse **(F2, F4–F6)**
46-2017002	7 A, 250 V, 3AG Slow-Blow Glass Cartridge-Type Fuse **(F1)**
46-301203	20 A, 32 V, 3AG Slow-Blow Glass Cartridge-Type Fuse **(F3)**
78-2708	Nylon Type 6/6 Hole Bushing with ⅝-Inch Inside Diameter × $^{55}/_{64}$-Inch Outside Diameter × ¼-Inch Thick
78-70501SC	2-Inch Diameter Capacitor Mounting Bracket
79-15021001	2-Circuit Single-Row Terminal Block
79-3206	5-Position 3AG Fuse Block with ¼-Inch Quick-Disconnect Terminals
79-441101	Panel-Mounting Non-Indicating 3AG Cartridge-Type Fuse Post
034482-02	Power Supply Chassis Base
034544-01	Fuse Block Cover
037243-01	Metal Base Plate *(not shown in illustration)*
037639-01	Label for Fuse Value **(F1)**
037641-01	Label for Fuse Values **(F2–F6)**

NOTE

A037396-01 power supply assembly has the 120 V plug
A037396-02 has the 100 V, 220 V, and 240 V plugs
A037396-03 has the 220 V and 240 V plugs

Line Voltage Range	Voltage Selection Plug Wire Color
90-110 VAC (100)	Violet
105-135 VAC (120)	Yellow
200-240 VAC (220)	Blue
220-260 VAC (240)	Brown

H. Printed-Circuit Boards

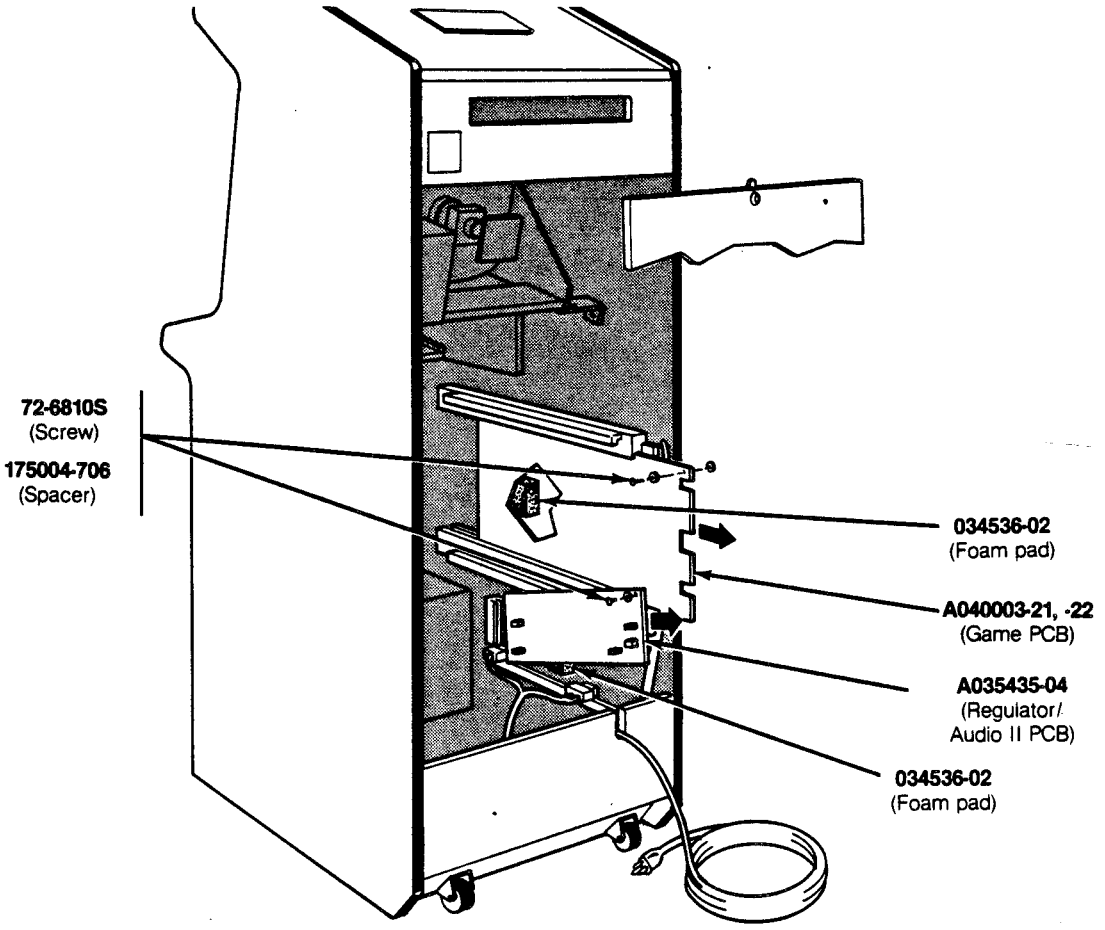

Figure 3-11 PCB Mounting Hardware Parts List

Part No.	*Description*
72-6810S	#8 x ⅝-Inch Phillips-Head Screw (secures PCB to cabinet)
175004-706	#8 Spacer (secures PCB to cabinet)
034536-02	Foam Pad

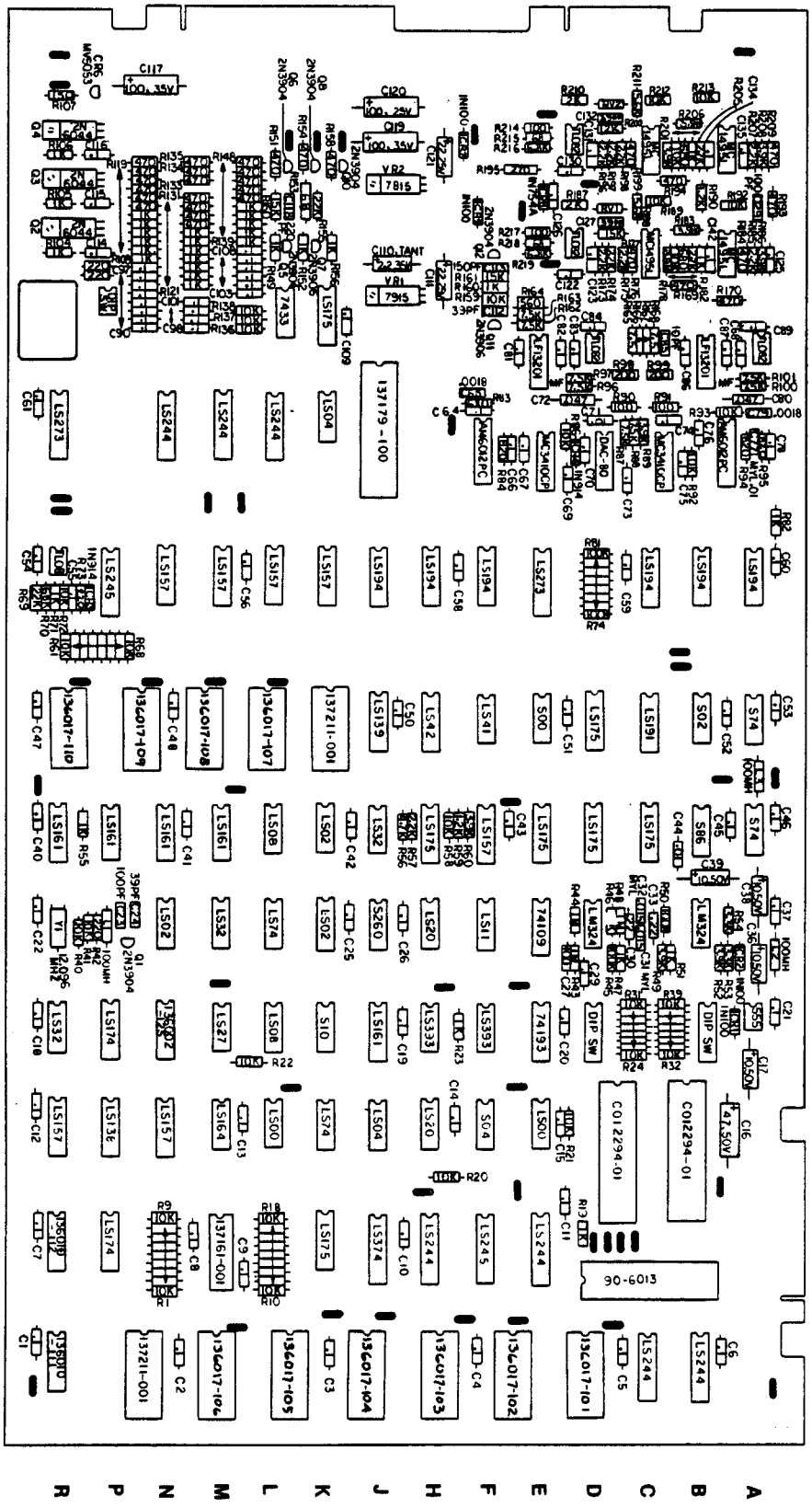

Figure 3-12 Black Widow Game Printed-Circuit Board Assembly

Black Widow Printed-Circuit Board Assembly Parts List

Designator	*Description*	*Part No.*
	Capacitors	
C1–C15	0.1 μF, 50 V, Ceramic-Disc Radial-Lead Capacitor	122002-104
C16	47 μF, 50 V Aluminum Electrolytic Fixed Axial-Lead Capacitor	24-500476
C17	10 μF, 50 V Aluminum Electrolytic Fixed Axial-Lead Capacitor	24-500106
C18–C22	0.1 μF, 50 V, Ceramic-Disc Radial-Lead Capacitor	122002-104
C23	100 pF, 100 V, Radial-Lead Epoxy-Dipped Mica Capacitor	128002-101
C24	39 pF, 100 V, Radial-Lead Epoxy-Dipped Mica Capacitor	128002-390
C25, C26	0.1 μF, 50 V, Ceramic-Disc Radial-Lead Capacitor	122002-104
C27	100 pF, 100 V, Radial-Lead Epoxy-Dipped Mica Capacitor	128002-101
C29	0.1 μF, 50 V, Ceramic-Disc Radial-Lead Capacitor	122002-104
C30	0.22 μF, 25 V, Ceramic-Disc Radial-Lead Capacitor	122008-224
C31, C32	0.015 μF, ± 10%, 100 V Radial-Lead Epoxy-Dipped Mylar Capacitor	21-101153
C33	0.22 μF, 25 V, Ceramic-Disc Radial-Lead Capacitor	122008-224
C35	0.1 μF, 50 V, Ceramic-Disc Radial-Lead Capacitor	122002-104
C36	10 μF, 50 V Aluminum Electrolytic Fixed Axial-Lead Capacitor	24-500106
C37	0.1 μF, 50 V Ceramic-Disc Radial-Lead Capacitor	122002-104
C38, C39	10 μF, 50 V Aluminum Electrolytic Fixed Axial-Lead Capacitor	24-500106
C40–C43	0.1 μF, 50 V, Ceramic-Disc Radial-Lead Capacitor	122002-104
C44	0.01 μF, 25 V, Ceramic-Disc Radial-Lead Capacitor	122005-103
C45–C63	0.1 μF, 50 V, Ceramic-Disc Radial-Lead Capacitor	122002-104
C64	0.1 μF, 50 V, Ceramic-Disc Radial-Lead Capacitor	122002-104
C65	0.0018 μF, ± 10%, 1 kV, Ceramic-Disc Radial-Lead Capacitor	27-102182
C66	0.1 μF, 50 V, Ceramic-Disc Radial-Lead Capacitor	122002-104
C67	0.1 μF, 50 V, Ceramic-Disc Radial-Lead Capacitor	122002-104
C69	0.1 μF, 50 V, Ceramic-Disc Radial-Lead Capacitor	122002-104
C70	0.1 μF, 50 V, Ceramic-Disc Radial-Lead Capacitor	122002-104
C71	0.01 μF, 25 V, Ceramic-Disc Radial-Lead Capacitor	122005-103
C72	0.047 μF, ± 10%, 50 V, Axial-Lead Epoxy-Dipped Polycarbonate Capacitor	122010-473
C73–C75	0.1 μF, 50 V, Ceramic-Disc Radial-Lead Capacitor	122002-104
C76	0.1 μF, 50 V, Ceramic-Disc Radial-Lead Capacitor	122002-104
C77	0.01 μF, ± 10%, 100 V, Radial-Lead Epoxy-Dipped Capacitor	21-101103
C78	0.1 μF, 50 V, Ceramic-Disc Radial-Lead Capacitor	122002-104
C79	0.0018 μF, ± 10%, 1 kV Radial-Lead Ceramic-Disc Capacitor	27-102182
C80	0.047 μF, ± 10%, 50 V, Axial-Lead Epoxy-Dipped Polycarbonate Capacitor	122010-473
C81–C84	0.1 μF, 50 V, Ceramic-Disc Radial-Lead Capacitor	122002-104
C85	10 pF, 100 V, Radial-Lead Epoxy-Dipped Mica Capacitor	128002-100
C86–C101	0.1 μF, 50 V, Ceramic-Disc Radial-Lead Capacitor	122002-104
C103–C109	0.1 μF, 50 V, Ceramic-Disc Radial-Lead Capacitor	122002-104
C110	2.2 μF, ± 10%, 35 V Tantalum Capacitor	122000-225
C111	22 μF, 25 V Electrolytic Fixed Axial-Lead Capacitor	24-250226
C112	39 pF, 100 V, Radial-Lead Epoxy-Dipped Mica Capacitor	128002-390
C113	150 pF, 100 V, Radial-Lead Epoxy-Dipped Mica Capacitor	128002-151

(Continued on next page)

Black Widow Game Printed-Circuit Board Assembly Parts List, continued

Designator	Description	Part No.
C114-C116	0.1 μF, 50 V, Ceramic-Disc Radial-Lead Capacitor	122002-104
C117	100 μF, 35 V Aluminum Electrolytic Fixed Axial-Lead Capacitor	24-350107
C118	220 pF, 100 V, Radial-Lead Epoxy-Dipped Mica Capacitor	128002-221
C119, C120	100 μF, 35 V Aluminum Electrolytic Fixed Axial-Lead Capacitor	24-350107
C121	22 μF, 25 V Electrolytic Fixed Axial-Lead Capacitor	24-250226
C122-C126	0.1 μF, 50 V, Ceramic-Disc Radial-Lead Capacitor	122002-104
C127	39 pF, 100 V, Radial-Lead Epoxy-Dipped Mica Capacitor	128002-390
C129	100 pF, 100 V, Radial-Lead Epoxy-Dipped Mica Capacitor	128002-101
C130, C131	0.1 μF, 50 V, Ceramic-Disc Radial-Lead Capacitor	122002-104
C132	39 pF, 100 V, Radial-Lead Epoxy-Dipped Mica Capacitor	128002-390
C134, C135	0.1 μF, 50 V, Ceramic-Disc Radial-Lead Capacitor	122002-104
	Diodes	
CR1, CR2	Type-1N100, 100 V Switching Diode	31-1N100
CR3, CR4	Type-1N914, 75 V Switching Diode	31-1N914
CR5	Type-1N100, 100 V Switching Diode	31-1N100
CR6	Type-MV5053 Light-Emitting Diode	38-MV5053
CR7	Type-1N100, 100 V Switching Diode	31-1N100
CR8	Type-1N754A, 6.8 V Zener Diode	131002-001
	Inductors	
L1-L3	100 μH, ± 10%, Hot-Molded Plastic Fixed R.F. Choke (Acceptable substitute is part no. 41-3003)	141002-001
	Integrated Circuits	
A4	Type-555 Integrated Circuit	37-555
A6, A7	Type-74S74 Integrated Circuit	37-74S74
A8	Type-74LS194 Integrated Circuit	37-74LS194
A10	Type-TL082 Integrated Circuit	37-TL082CP
A/B9	12-Bit Digital-to-Analog Converter	137158-002
A/B11	Type-MC1495L Integrated Circuit	37-1495
A/B12	Type-MC1495L Integrated Circuit	37-1495
B1	Type-74LS244 Integrated Circuit	37-74LS244
B3	Audio I/O N-Channel MOS/LSI Custom Chip	C012294-01
B5	Type-LM324 Integrated Circuit	37-LM324
B6	Type-74S86 Integrated Circuit	137002-001
B7	Type-74S02 Integrated Circuit	37-74S02
B8	Type-74LS194 Integrated Circuit	37-74LS194
B10	Type-LF13201 Integrated Circuit	37-13201
C1	Type-74LS244 Integrated Circuit	37-74LS244
C2	Microprocessor	90-6013
C6	Type-74LS175 Integrated Circuit	37-74LS175
C7	Type-74LS191 Integrated Circuit	37-74LS191
C8	Type-74LS194 Integrated Circuit	37-74LS194
C9	10-Bit Digital-to-Analog Converter	137160-003

(Continued on next page)

Black Widow Game Printed-Circuit Board Assembly Parts List, continued

Designator	*Description*	*Part No.*
C11, C12	Type-MC1495L Integrated Circuit	37-1495
C/D3	Audio I/O N-Channel MOS/LSI Custom Chip	C012294-01
D5	Type-LM324 Integrated Circuit	37-LM324
D6, D7	Type-74LS175 Integrated Circuit	37-74LS175
D9	8-Bit Digital-to-Analog Converter	137159-001
D10	Type-TL082 Integrated Circuit	37-TL082CP
D/E11, D/E12	Type-TL082 Integrated Circuit	37-TL082CP
E2	Type-74LS244 Integrated Circuit	37-74LS244
E3	Type-74LS00 Integrated Circuit	37-74LS00
E4	Type-74193 Integrated Circuit	37-74193
E5	Type-74109 Integrated Circuit	37-74109
E6	Type-74LS175 Integrated Circuit	37-74LS175
E7	Type-74S00 Integrated Circuit	37-74S00
E8	Type-74LS273 Integrated Circuit	37-74LS273
E9	10-Bit Digital-to-Analog Converter	137160-003
E10	Type-LF13201 Integrated Circuit	37-13201
F2	Type-74LS245 Integrated Circuit	37-74LS245
F3	Type-74S04 Integrated Circuit	37-74S04
F4	Type-74LS393 Integrated Circuit	37-74LS393
F5	Type-74LS11 Integrated Circuit	137149-001
F6	Type-74LS157 Integrated Circuit	37-74LS157
F7	Type-74LS14 Integrated Circuit	37-74LS14
F8	Type-74LS194 Integrated Circuit	37-74LS194
F9	12-Bit Digital-to-Analog Converter	137158-002
H2	Type-74LS244 Integrated Circuit	37-74LS244
H3	Type-74LS20 Integrated Circuit	37-74LS20
H4	Type-74LS393 Integrated Circuit	37-74LS393
H5	Type-74LS20 Integrated Circuit	37-74LS20
H6	Type-74LS175 Integrated Circuit	37-74LS175
H7	Type-74LS42 Integrated Circuit	37-74LS42
H8	Type-74LS194 Integrated Circuit	37-74LS194
J2	Type-74LS374 Integrated Circuit	37-74LS374
J3	Type-74LS04 Integrated Circuit	37-74LS04
J4	Type-74LS161 Integrated Circuit	37-74LS161
J5	Type-74S260 Integrated Circuit	37-74S260
J6	Type-74LS32 Integrated Circuit	37-74LS32
J7	Type-74LS139 Integrated Circuit	37-74LS139
J8	Type-74LS194 Integrated Circuit	37-74LS194
J9	Vector Generator	137179-001
K2	Type-74LS175 Integrated Circuit	37-74LS175
K3	Type-74LS74 Integrated Circuit	37-74LS74
K4	Type-74S10 Integrated Circuit	137236-001
K5, K6	Type-74LS02 Integrated Circuit	37-74LS02
K8	Type-74LS157 Integrated Circuit	37-74LS157

(Continued on next page)

Black Widow Game Printed-Circuit Board Assembly Parts List, continued

Designator	*Description*	*Part No.*
K9	Type-74LS04 Integrated Circuit	37-74LS04
K10	Type-74LS175 Integrated Circuit	37-74LS175
L3	Type-74LS00 Integrated Circuit	37-74LS00
L4	Type-74LS08 Integrated Circuit	37-74LS08
L5	Type-74LS74 Integrated Circuit	37-74LS74
L6	Type-74LS08 Integrated Circuit	37-74LS08
L10	Type-7433 Integrated Circuit	37-7433
M4	Type-74LS27 Integrated Circuit	37-74LS27
M3	Type-74LS164 Integrated Circuit	37-74LS164
M5	Type-74LS32 Integrated Circuit	37-74LS32
M6	Type-74LS161 Integrated Circuit	37-74LS161
M8	Type-74LS157 Integrated Circuit	37-74LS157
M9	Type-74LS244 Integrated Circuit	37-74LS244
N3	Type-74LS157 Integrated Circuit	37-74LS157
N5	Type-74LS02 Integrated Circuit	37-74LS02
N6	Type-74LS161 Integrated Circuit	37-74LS161
N8	Type-74LS157 Integrated Circuit	37-74LS157
N9	Type-74LS244 Integrated Circuit	37-74LS244
P2	Type-74LS174 Integrated Circuit	37-74LS174
P3	Type-74LS138 Integrated Circuit	137177-001
P4	Type-74LS174 Integrated Circuit	37-74LS174
P6	Type-74LS161 Integrated Circuit	37-74LS161
P8	Type-74LS245 Integrated Circuit	37-74LS245
R3	Type-74LS157 Integrated Circuit	37-74LS157
R4	Type-74LS32 Integrated Circuit	37-74LS32
R6	Type-74LS161 Integrated Circuit	37-74LS161
R8	Type-TL082 Integrated Circuit	37-TL082CP
R9	Type-74LS273 Integrated Circuit	37-74LS273
	Miscellaneous	
B4	8-Station Single-Throw, Dual-Inline-Package Bit Switch	66-118P1T
D4	8-Station Single-Throw, Dual-Inline-Package Bit Switch	66-118P1T
P10	4-Station Single-Throw, Dual-Inline-Package Bit Switch	66-114P1T
VR1	-15 V Voltage Regulator	37-7915
VR2	+ 15 V Voltage Regulator	37-7815
Y1	12.096 MHz, ±0.005% Crystal	144000-001
	Nylon Snap-In Fastener	81-4302
	Test Point (Acceptable substitute is part no. 020670-01)	179051-002
	Read-Only Memories	
D1	Programmable Read-Only Memory	136017-101
E/F1	Programmable Read-Only Memory	136017-102
H1	Programmable Read-Only Memory	136017-103
J1	Programmable Read-Only Memory	136017-104

(Continued on next page)

Black Widow Game Printed-Circuit Board Assembly Parts List, continued

Designator	*Description*	*Part No.*
K/L1	Programmable Read-Only Memory	136017-105
L7	Programmable Read-Only Memory	136017-107
M1	Programmable Read-Only Memory	136017-106
M2	Electrically-Alterable Read-Only Memory	137161-001
M/N7	Programmable Read-Only Memory	136017-108
N4	Programmable Read-Only Memory	136002-125
N/P7	Programmable Read-Only Memory	136017-109
R1	Programmable Read-Only Memory	136010-111
R2	Programmable Read-Only Memory	136010-112
R7	Programmable Read-Only Memory	136017-110
	Random-Access Memories	
K7	Random-Access Memory	137211-001
N/P1	Random-Access Memory	137211-001
	Resistors	
R1-R18	10 kΩ, ±5%, ¼ W Resistor	110000-103
R19	1 kΩ, ±5%, ¼ W Resistor	110000-102
R20-R22	10 kΩ, ±5%, ¼ W Resistor	110000-103
R23	1 kΩ, ±5%, ¼ W Resistor	110000-102
R24-R41	10 kΩ, ±5%, ¼ W Resistor	110000-103
R42	220 kΩ, ±5%, ¼ W Resistor	110000-221
R43, R44	1 MΩ, ±5%, ¼ W Resistor	110000-105
R45	100 kΩ, ±5%, ¼ W Resistor	110000-104
R46	22 kΩ, ±5%, ¼ W Resistor	110000-223
R47	1 kΩ, ±5%, ¼ W Resistor	110000-102
R48	1 MΩ, ±5%, ¼ W Resistor	110000-105
R49	3.9 kΩ, ±5%, ¼ W Resistor	110000-392
R50	100 kΩ, ±5%, ¼ W Resistor	110000-104
R51	1 kΩ, ±5%, ¼ W Resistor	110000-102
R52	3.9 kΩ, ±5%, ¼ W Resistor	110000-392
R53, R54	3.3 kΩ, ±5%, ¼ W Resistor	110000-332
R55	1 kΩ, ±5%, ¼ W Resistor	110000-102
R56	4.7 kΩ, ±5%, ¼ W Resistor	110000-472
R57	2.2 kΩ, ±5%. ¼ W Resistor	110000-222
R58	10 kΩ, ±5%, ¼ W Resistor	110000-103
R59	1.2 kΩ, ±5%, ¼ W Resistor	110000-122
R60	3.9 kΩ, ±5%, ¼ W Resistor	110000-392
R61-R68	10 kΩ, ±5%, ¼ W Resistor	110000-103
R69	22 kΩ, ±5%, ¼ W Resistor	110000-223
R70	68 kΩ, ±5%, ¼ W Resistor	110000-683
R71	1 kΩ, ±5%, ¼ W Resistor	110000-102
R72	10 kΩ, ±5%, ¼ W Resistor	110000-103
R73	220 kΩ, ±5%, ¼ W Resistor	110000-221

(Continued on next page)

Black Widow Game Printed-Circuit Board Assembly Parts List, continued

Designator	Description	Part No.
R74-R81	100 kΩ, ±5%, ¼ W Resistor	110000-104
R82	1 kΩ, ±5%, ¼ W Resistor	110000-102
R83	680 Ω, ±5%, ¼ W Resistor	110000-681
R84	820 Ω, ±5%, ¼ W Resistor	110000-821
R86	10 kΩ, ±5%, ¼ W Resistor	110000-103
R87, R88	7.5 kΩ, ±1%, ⅛ W Resistor	110003-752
R89	3.9 kΩ, ±5%, ¼ W Resistor	110000-392
R90, R91	100 Ω, ±5%, ¼ W Resistor	110000-101
R92, R93	10 kΩ, ±5%, ¼ W Resistor	110000-103
R94, R95	820 Ω, ±5%, ¼ W Resistor	110000-821
R96, R97	7.5 kΩ, ±1%, ⅛ W Resistor	110003-752
R98, R99	500 Ω Vertical PCB-Mounting Cermet Trimpot (Acceptable substitute is part no. 19-315501)	119002-501
R100, R101	7.5 kΩ, ±1%, ⅛ W Resistor	110003-752
R102, R103	220 kΩ, ±5%, ¼ W Resistor	110000-221
R104-R106	1 kΩ, ±5%, ¼ W Resistor	110000-102
R107	150 Ω, ±5%, ¼ W Resistor	110000-151
R108-R113	1 kΩ, ±5%, ¼ W Resistor	110000-102
R114-R119	470 Ω, ±5%, ¼ W Resistor	110000-471
R121-R127	1 kΩ, ±5%, ¼ W Resistor	110000-102
R128-R131	470 Ω, ±5%, ¼ W Resistor	110000-471
R133-R135	470 Ω, ±5%, ¼ W Resistor	110000-471
R136-R138	10 kΩ, ±5%, ¼ W Resistor	110000-103
R139-R143	1 kΩ, ±5%, ¼ W Resistor	110000-102
R144-R148	470 Ω, ±5%, ¼ W Resistor	110000-471
R149	1 kΩ, ±5%, ¼ W Resistor	110000-102
R150	15 kΩ, ±5%, ¼ W Resistor	110000-153
R151	470 Ω, ±5%, ¼ W Resistor	110000-471
R153	68 Ω, ±5%, ¼ W Resistor	110001-680
R152	1 kΩ, ±5%, ¼ W Resistor	110000-102
R154	470 Ω, ±5%, ¼ W Resistor	110000-471
R155	22 kΩ, ±5%, ¼ W Resistor	110000-223
R156	1 kΩ, ±5%, ¼ W Resistor	110000-102
R158	470 Ω, ±5%, ¼ W Resistor	110000-471
R159	10 kΩ, ±5%, ¼ W Resistor	110000-103
R160	1 kΩ, ±5%, ¼ W Resistor	110000-102
R161	15 kΩ, ±5%, ¼ W Resistor	110000-153
R162, R163	7.5 kΩ, ±1%, ⅛ W Resistor	110003-752
R164	560 Ω, ±5%, ¼ W Resistor	110000-561
R165-R168	7.5 kΩ, ±1%, ⅛ W Resistor	110003-752
R169, R170	470 Ω, ±5%, ¼ W Resistor	110000-471
R173-R175	2.2 kΩ, ±5%. ¼ W Resistor	110000-222
R176	470 Ω, ±5%, ¼ W Resistor	110000-471
R177	15 kΩ, ±5%, ¼ W Resistor	110000-153
R178	3.9 kΩ, ±5%, ¼ W Resistor	110000-392

(Continued on next page)

Black Widow Game Printed-Circuit Board Assembly Parts List, continued

Designator	*Description*	*Part No.*
R179	10 kΩ, ±5%, ¼ W Resistor	110000-103
R180	680 Ω, ±5%, ¼ W Resistor	110000-681
R181	2.7 kΩ, ±5%, ¼ W Resistor	110000-272
R182	1 kΩ, ±5%, ¼ W Resistor	110000-102
R183	3.9 kΩ, ±5%, ¼ W Resistor	110000-392
R184	470 Ω, ±5%, ¼ W Resistor	110000-471
R185	2.2 kΩ, ±5%. ¼ W Resistor	110000-222
R186	3.9 kΩ, ±5%, ¼ W Resistor	110000-392
R187	2 kΩ Vertical PCB-Mounting Cermet Trimpot (Acceptable substitute is part no. 19-315202)	119002-202
R188	5.6 kΩ, ±5%, ¼ W Resistor	110000-562
R189	10 kΩ Vertical PCB-Mounting Cermet Trimpot (Acceptable substitute is part no. 19-315103)	119002-103
R190	1.2 kΩ, ±5%, ¼ W Resistor	110000-122
R192	10 kΩ Vertical PCB-Mounting Cermet Trimpot (Acceptable substitute is part no. 19-315103)	119002-103
R193, R194	470 Ω, ±5%, ¼ W Resistor	110000-471
R195	270 Ω, ±5%, ¼ W Resistor	110001-271
R196–R198	2.2 kΩ, ±5%. ¼ W Resistor	110000-222
R199	470 Ω, ±5%, ¼ W Resistor	110000-471
R200	12 kΩ, ±5%, ¼ W Resistor	110000-123
R201	3.9 kΩ, ±5%, ¼ W Resistor	110000-392
R202	10 kΩ, ±5%, ¼ W Resistor	110000-103
R203	680 Ω, ±5%, ¼ W Resistor	110000-681
R204	1 kΩ, ±5%, ¼ W Resistor	110000-102
R205	2.7 kΩ, ±5%, ¼ W Resistor	110000-272
R206	3.9 kΩ, ±5%, ¼ W Resistor	110000-392
R207	2.2 kΩ, ±5%. ¼ W Resistor	110000-222
R208	3.9 kΩ, ±5%, ¼ W Resistor	110000-392
R209	470 Ω, ±5%, ¼ W Resistor	110000-471
R210	2 kΩ Vertical PCB-Mounting Cermet Trimpot (Acceptable substitute is part no. 19-315202)	119002-202
R211	5.6 kΩ, ±5%, ¼ W Resistor	110000-562
R212, R213	10 kΩ Vertical PCB-Mounting Cermet Trimpot (Acceptable substitute is part no. 19-315103)	119002-103
R214	100 Ω, ±5%, ¼ W Resistor	110000-101
R215	68 Ω, ±5%, ¼ W Resistor	110000-680
R216	6.8 kΩ, ±5%, ¼ W Resistor	110000-682
R217	100 Ω, ±5%, ¼ W Resistor	110000-101
R218	68 Ω, ±5%, ¼ W Resistor	110000-680
R219	6.8 kΩ, ±5%, ¼ W Resistor	110000-682
RV1, RV2	Voltage Dependent Resistor	110004-001

(Continued on next page)

Black Widow Game Printed-Circuit Board Assembly Parts List, continued

Designator	*Description*	*Part No.*
	Sockets	
B3	40-Contact Medium-Insertion-Force Integrated Circuit Socket	79-42C40
C2	40-Contact Medium-Insertion-Force Integrated Circuit Socket	79-42C40
C/D3	40-Contact Medium-Insertion-Force Integrated Circuit Socket	79-42C40
D1	24-Contact Medium-Insertion-Force Integrated Circuit Socket	79-42C24
E/F1	24-Contact Medium-Insertion-Force Integrated Circuit Socket	79-42C24
H1	24-Contact Medium-Insertion-Force Integrated Circuit Socket	79-42C24
J1	24-Contact Medium-Insertion-Force Integrated Circuit Socket	79-42C24
J9	40-Contact Medium-Insertion-Force Integrated Circuit Socket	79-42C40
K7	24-Contact Medium-Insertion-Force Integrated Circuit Socket	79-42C24
K/L1	24-Contact Medium-Insertion-Force Integrated Circuit Socket	79-42C24
L7	24-Contact Medium-Insertion-Force Integrated Circuit Socket	79-42C24
M1	24-Contact Medium-Insertion-Force Integrated Circuit Socket	79-42C24
M2	22-Contact Medium-Insertion-Force Integrated Circuit Socket	79-42C22
M/N7	24-Contact Medium-Insertion-Force Integrated Circuit Socket	79-42C24
N/P1	24-Contact Medium-Insertion-Force Integrated Circuit Socket	79-42C24
N/P7	24-Contact Medium-Insertion-Force Integrated Circuit Socket	79-42C24
R7	24-Contact Medium-Insertion-Force Integrated Circuit Socket	79-42C24
	Transistors	
Q1	Type-2N3904, 60 V, 1 W NPN Transistor	34-2N3904
Q2-Q4	Type-2N6044 Darlington NPN Transistor	34-2N6044
Q5, Q6	Type-2N3904, 60 V, 1 W NPN Transistor	34-2N3904
Q7	Type-2N3906 PCB Switching and Amplifying Transistor	33-2N3906
Q8	Type-2N3904, 60 V, 1 W NPN Transistor	34-2N3904
Q10	Type-2N3904, 60 V, 1 W NPN Transistor	34-2N3904
Q11	Type-2N3906 PCB Switching and Amplifying Transistor	33-2N3906
Q12	Type-2N3904, 60 V, 1 W NPN Transistor	34-2N3904

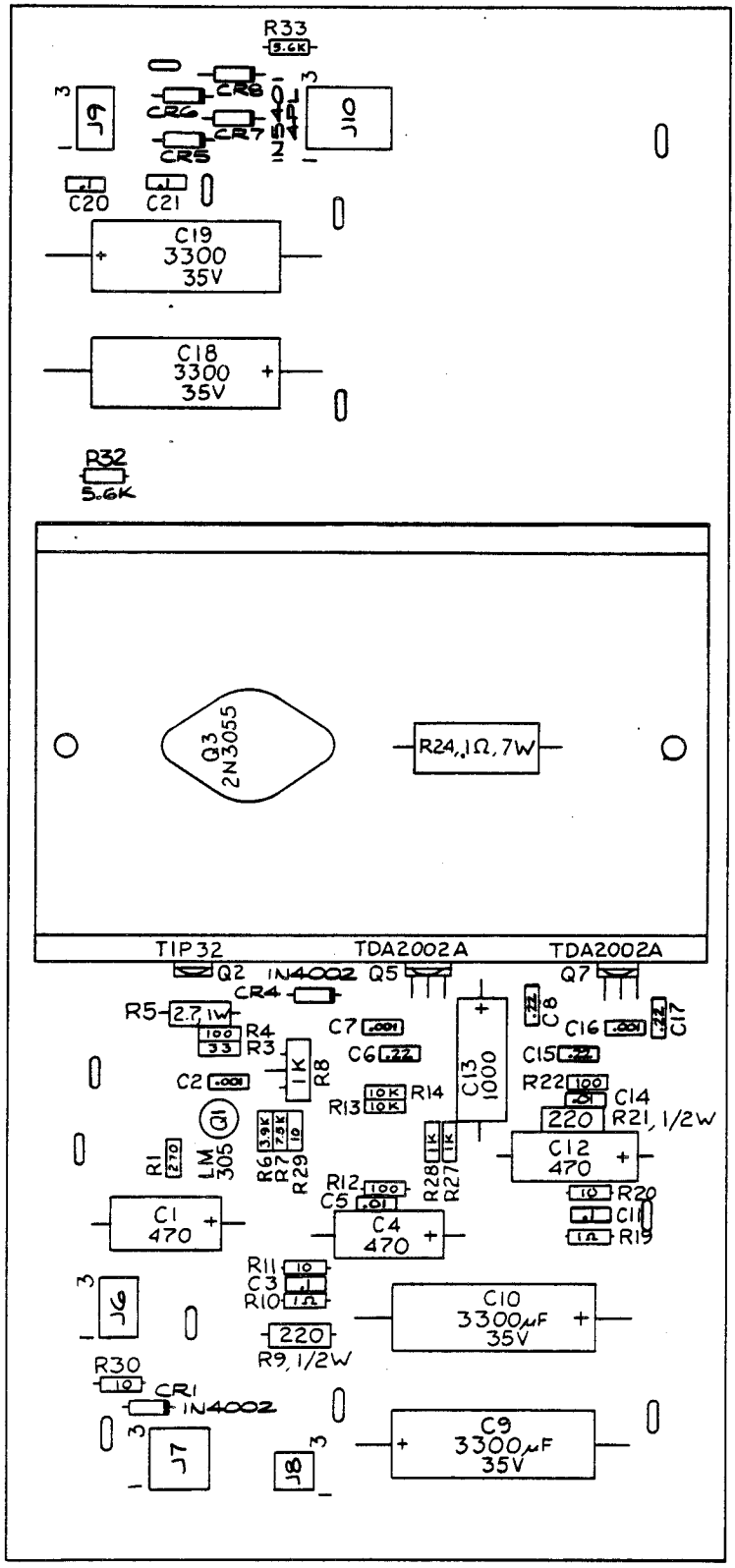

Figure 3-13 Regulator/Audio II PCB Assembly
A035435-04 D

Regulator/Audio II PCB Assembly
Parts List

Designator	*Description*	*Part No.*
	Capacitors	
C1	470 μF, 25 V, Aluminum Electrolytic Fixed Axial-Lead Capacitor	24-250477
C2	0.001 μF, 50 V, Ceramic-Disc Axial-Lead Capacitor	122002-102
C3	0.1 μF, +80%, -20%, 50 V, Ceramic-Disc Capacitor	122001-104
C4	470 μF, 25 V, Aluminum Electrolytic Fixed Axial-Lead Capacitor	24-250477
C5	0.01 μF, 25 V Minimum, Ceramic-Disc Axial-Lead Capacitor (Acceptable substitute is part no. 122005-103)	100015-103
C6	0.22 μF, 25 V, Ceramic-Disc Axial-Lead Capacitor	122004-224
C7	0.001 μF, 50 V, Ceramic-Disc Axial-Lead Capacitor	122002-102
C8	0.22 μF, 25 V, Ceramic-Disc Axial-Lead Capacitor	122004-224
C9, C10	3300 μF, 35 V, Aluminum Electrolytic Fixed Axial-Lead Capacitor	24-350338
C11	0.1 μF, +80%, -20%, 50 V, Ceramic-Disc Capacitor	122001-104
C12	470 μF, 25 V, Aluminum Electrolytic Fixed Axial-Lead Capacitor	24-250477
C13	1000 μF, 25 V, Aluminum Electrolytic Fixed Axial-Lead Capacitor	24-250108
C14	0.01 μF, 25 V Minimum, Ceramic-Disc Axial-Lead Capacitor (Acceptable substitute is part no. 122005-103)	100015-103
C15	0.22 μF, 25 V, Ceramic-Disc Axial-Lead Capacitor	122004-224
C16	0.001 μF, 50 V, Ceramic-Disc Axial-Lead Capacitor	122002-102
C17	0.22 μF, 25 V, Ceramic-Disc Axial-Lead Capacitor	122004-224
C18, C19	3300 μF, 35 V, Aluminum Electrolytic Fixed Axial-Lead Capacitor	24-350338
C20, C21	0.1 μF, +80%, -20%, 50 V, Ceramic-Disc Capacitor	122001-104
	Diodes	
CR1	Type-1N4002, 1 A, 100 V Silicon Rectifier Diode	31-1N4002
CR4	Type-1N4002, 1 A, 100 V Silicon Rectifier Diode	31-1N4002
CR5-CR8	Type-1N5401, 3 A, 100 V Silicon Rectifier Diode	31-1N5401
	Integrated Circuits	
Q1	Type-LM305, 5 V, Linear Voltage Regulator	37-LM305
Q5	Type-TDA2002A, 8 W, Linear Audio Amplifier Integrated Circuit	137151-002
Q7	Type-TDA2002A, 8 W, Linear Audio Amplifier Integrated Circuit	137151-002
	Resistors	
R1	270 Ω, ±5%, ¼ W Resistor	110000-271
R3	33 Ω, ±5%, ¼ W Resistor	110000-330
R4	100 Ω, ±5%, ¼ W Resistor	110000-101
R5	2.7 Ω, ±5%, 1 W Resistor	110009-027
R6	3.9 kΩ, ±5%, ¼ W Resistor	110000-392
R7	7.5 kΩ, ±5%, ¼ W Resistor	110000-752
R8	1 kΩ Vertical PCB-Mounting Cermet Potentiometer (Acceptable substitute is part no. 119002-102)	19-315102
R9	220 Ω, ±5%, ½ W Resistor	110001-221

(Continued on next page)

Regulator/Audio II PCB Assembly
Parts List, continued

Designator	*Description*	*Part No.*
R10	1 Ω, ±5%, ¼ W Resistor	110000-010
R11	10 Ω, ±5%, ¼ W Resistor	110000-100
R12	100 Ω, ±5%, ¼ W Resistor	110000-101
R13, R14	10 kΩ, ±5%, ¼ W Resistor	110000-103
R19	1 Ω, ±5%, ¼ W Resistor	110000-010
R20	10 Ω, ±5%, ¼ W Resistor	110000-100
R21	220 Ω, ±5%, ½ W Resistor	110001-221
R22	100 Ω, ±5%, ¼ W Resistor	110000-101
R24	0.1 Ω, ±3%, 7 W Wirewound Resistor	19-100P1015
R27, R28	1 kΩ, ±5%, ¼ W Resistor	110000-102
R29, R30	10 Ω, ±5%, ¼ W Resistor	110000-100
R32, R33	5.6 kΩ, ±5%, ¼ W Resistor	110000-562
	Transistors	
Q2	Type-TIP32 PNP Power Transistor	33-TIP32
Q3	Type-2N3055 NPN Silicon Transistor	34-2N3055
	Mechanical Parts	
J6	6-Position Connector Receptacle	79-58306
J7	9-Position Connector Receptacle	79-58308
J8	4-Position Connector Receptacle	79-58354
J9	6-Position Connector Receptacle	79-58306
J10	12-Position Connector Receptacle	79-58346
Q2	#6-32 x ¼-Inch Binder-Head Nylon Screw	75-F60405
Q3	#6-32 Nut/Washer Assembly	75-99516
Q3	Thermally Conductive Silicon Insulator	78-16008
Q2	Thermally Conductive Silicon Insulator	78-16014
Q5, Q7	#6 x ⅜-Inch Cross-Recessed Pan-Head Thread-Forming Type-AB Zinc-Plated-Steel Screw	72-6606S
	Heat Sink	034531-01
	Test Point (Acceptable substitute is part no. 020670-01)	179051-001

YOUR COMMENTS, PLEASE!

Your comments will assist Atari in improving our publications. The comments are an important part of preparing for revisions of game manuals. Please write in the space below. No postage stamp is necessary if mailed in the U.S.A.

If you have any technical questions about certain ATARI games products, or are requesting additional publications, we will immediately forward your note to the appropriate person.

Page: Comments:

Fill in if you wish a reply:

Name_____

Firm _____ ☐ Distributor

Address _____ ☐ Operator

City _____ State _____ Zip _____ ☐ Other_____

Area Code _____ Phone _____

First fold

No Postage
Necessary
if mailed in
the United States

BUSINESS REPLY MAIL

FIRST CLASS PERMIT NO. 1004 SUNNYVALE, CA

POSTAGE WILL BE PAID BY ADDRESSEE

Atari, Inc.
Attn.: Field Service/Coin-Op Division
P. O. Box 427
Sunnyvale, California 94086

Second fold

From

Tape this edge

Warranty

Seller warrants that its printed-circuit boards and parts thereon are free from defects in material and workmanship under normal use and service for a period of ninety (90) days from date of shipment. Seller warrants that its video displays (in games supplied with displays) are free from defects in material and workmanship under normal use and service for a period of thirty (30) days from date of shipment. None of the Seller's other products or parts thereof are warranted.

If the products described in this manual fail to conform to this warranty, Seller's sole liability shall be, at its option, to repair, replace, or credit Buyer's account for such products which are returned to Seller during said warranty period, provided:

(a) Seller is promptly notified in writing upon discovery by Buyer that said products are defective;

(b) Such products are returned prepaid to Seller's plant; and

(c) Seller's examination of said products discloses to Seller's satisfaction that such alleged defects existed and were not caused by accident, misuse, neglect, alteration, improper repair, installation, or improper testing.

In no event shall Seller be liable for loss of profits, loss of use, incidental or consequential damages.

Except for any express warranty set forth in a written contract between Seller and Buyer which contract supersedes the terms herein, this warranty is expressed in lieu of all other warranties expressed or implied, including the implied warranties of merchantability and fitness for a particular purpose, and of all other obligations or liabilities on the Seller's part, and it neither assumes nor authorizes any other person to assume for the Seller any other liabilities in connection with the sale of products by Seller.

The use of any non-Atari parts may void your warranty, according to the terms of the warranty. The use of any non-Atari parts may also adversely affect the safety of your game and cause injury to you and others. Be very cautious in using non-Atari-supplied components with our games, in order to insure your safety.

Atari distributors are independent, being privately owned and operated. In their judgment they may sell parts or accessories other than Atari parts or accessories. Atari cannot be responsible for the quality, suitability or safety of any non-Atari part or any modification including labor which is performed by such distributor.