
CHOPPER
I
SNK

航空騎兵物語 CHOPPER I こうくうきへいものがたり

敵に勝利し無事着艦せよ！

WIN AND LAND ON THE DECK SAFELY!

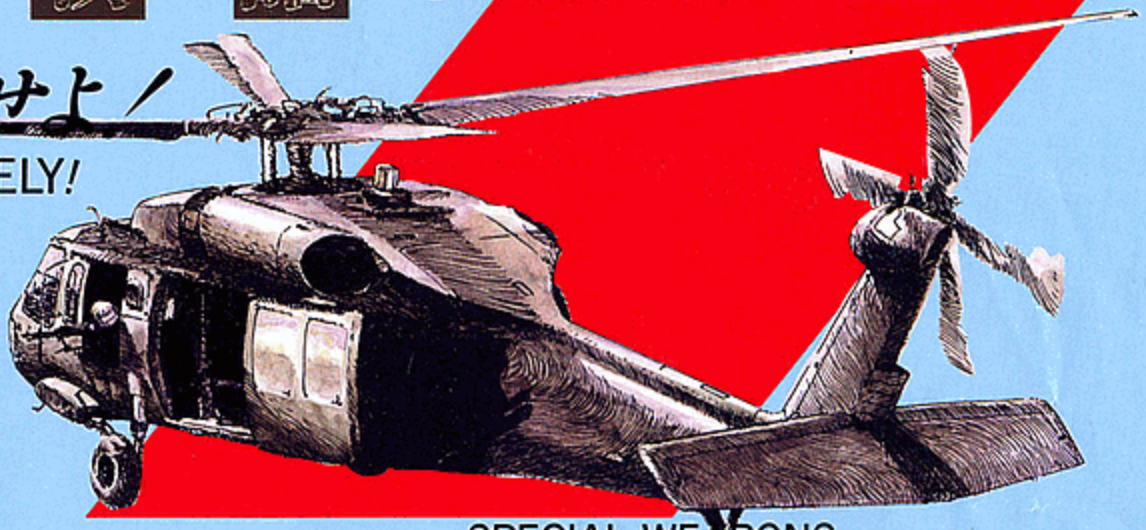

CONTROL CHOPPER1

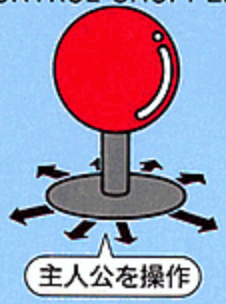



POWER-UP ITEMS パワーアップアイテム

パワーアップアイテムはすべて機銃ボタンの操作により、発射する事ができる。
各パワーアップアイテムは複合使用ができ、より強力な攻撃力を持つ事ができる。
Fire with fire button A and combine power up items with button B to make your attack more powerfull.

P 機銃の破壊力アップ。
POWER UP OF MACHINE GUN

バルカン砲が装着できる。
QUICK FIRING GUN

L 射程距離がのびる。
LONGER FIRING RANGE

誘導ミサイルを発射。
HEAT SEEKING MISSILES

SPECIAL WEAPONS 特殊兵器アイテム

特殊兵器アイテムを取ると、アイテム表示画面に最大4個まで、それぞれのアイテムをストックする事ができ、特殊兵器使用ボタンの操作でそれらのアイテムを使用できる。
A maximum of four kinds of special weapons can be stocked, which will be shown on the screen. Use B button to fire special weapons.



ナパーム爆撃 NAPALM BOMBS
味方戦闘機がナパーム弾で援護攻撃
Fighters on your side assist you with NAPALM BOMBS.



炸裂弾 EXPLOSIVES
強力な破壊を広範囲にできる
Destroys enemies in wide range.



バリヤー攻撃 BARRIER ATTACK
バリヤーで敵の攻撃をふせぎ逆に攻撃を加える
Avoid enemy's attack with barrier and make counter attack.

敵を撃退せよ！

SNK
株式会社 エス・エヌ・ケイ
SNK CORPORATION
大阪本社 〒564 大阪府吹田市
東京支店 〒101 東京都千代田区

CHOPPER II





CONTROL CHOPPER1

POWER-UP ITEMS

Fire with fire button A and combine power up items with button B to make your attack more powerfull.



POWER UP OF MACHINE GUN



QUICK FIRING GUN



LONGER FIRING RANGE



HEAT SEEKING MISSILES

SPECIAL WEAPONS

A maximum of four kinds of special weapons can be stocked, which will be shown on the screen. Use B button to fire special weapons.



NAPALM BOMBS
Fighters on your side assist you with NAPALM BOMBS.



EXPLOSIVES
Destroy enemies in wide range.



BARRIER ATTACK
Avoid enemy's attack with barrier and make counter attack.

SNK

SNK CORPORATION OF AMERICA

INSTRUCTIONS MANUAL



VERTICAL CONVERSION KIT

SNK CORPORATION OF AMERICA
246 SOBRANTE WAY
SUNNYVALE, CA 94086
TEL: (408) 736-8844
FAX: (408) 736-0446

FCC WARNING:

This equipment generates, uses, and can radiate radio frequency energy and if not installed properly, ie; in strict accordance with the procedures in this instruction manual, may cause interference with radio communications.

This equipment has been tested and found to comply with the limits set forth for a Class A computing device pursuant to Subpart J of part 15 of FCC regulations, which are designed to provide reasonable protection against such interference when operated in a commercial environment.

Operation of this equipment in a residential area is likely to cause interference in which the user, at his expense, will be required to correct.

COPYRIGHT NOTICE:

Chopper 1 is Copyright 1988 SNK Corporation of America. Every effort has been made to ensure the accuracy of the information contained in this manual. SNK Corporation of America reserves the right to change the contents of this publication, or the products it describes, without prior written notification.

AAMA WARNING:

All Chopper 1 PCBs imported by SNK Corporation of America for legal sale in the United States of America contain an AAMA WARNING sticker affixed to the PCB set. In the event you are offered a Chopper 1 PCB set that does not have this sticker, you should suspect that the PCB set was imported illegally. For specific information on legal PCBs, contact SNK Corporation of America at (408) 736-8844.

REPLACEMENT PARTS AND SERVICE:

To obtain replacement parts and technical assistance, contact the Authorized Distributor whom you purchased this product. For further technical assistance or referral, you may contact SNK Corporation of America's Customer Service department between the hours of 8:30 am to 5:00 p.m. Pacific Time at (408) 736-8844.

CHOPPER 1 CONVERSION KIT

INSTRUCTIONS MANUAL

TABLE OF CONTENTS

1. **PREPARATIONS**

   A. List of Materials.....1
   B. Specific Requirements.....1
   C. Preparing the Cabinet.....2

2. **INSTALLATION INSTRUCTIONS**

   A. Mounting the PCB Set.....4
   B. Control Panel Assembly.....4
   C. Installing the Main Harness.....4
   D. Installing the Cabinet Graphics.....5

3. **GAME INFORMATION**

   A. Dipswitch Selectable Options.....6
   B. Main Harness Edge Connector Pin-Out.....7

© 1988 SNK Corporation of America

246 Sobrante Way
Sunnyvale, CA. 94086

TEL: (408) 736-8844
FAX: (408) 736-0446

WARNING!

This product is intended to be installed by qualified personnel who possess general knowledge of solid state electronics, video monitors, and power supply theory. Individuals not trained in these areas should not attempt to install or repair the the electronic portions of this conversion kit.

1. PREPARATION

A. List of Materials.

Inspect the contents of your conversion kit to ensure it is complete and is in satisfactory condition. If any damages have occurred during shipment, please notify your SNK distributor immediately with the kit Serial Number and a description of the problem.

1	PCB SET, CHOPPER 1
1	MAIN HARNESS, 56 PIN JAMMA STANDARD
1	JOYSTICK, 8 WAY, LEAF SWITCH
1	PUSHBUTTON ASSY, 1P START
1	PUSHBUTTON ASSY, 2P START
2	PUSHBUTTON ASSY W/MICROSWITCH, RED
2	PUSHBUTTON ASSY W/MICROSWITCH, YELLOW
1	LOGO PLEX, CHOPPER 1
1	MONITOR TUBE CARD, CHOPPER 1
1	CONTROL PANEL OVERLAY, CHOPPER 1
2	SIDE DECAL, SNK GENERIC
1	INSTRUCTION MANUAL

B. Special Requirements.

MONITOR:	RGB COLOR, RASTER SCANNING, VERTICAL MOUNT
POWER SUPPLY:	+5 VDC @ 7 AMPS MINIMUM
	+12VDC @ 1 AMP MINIMUM
	-5 VDC @ .5 AMP MINIMUM
CABINET:	UPRIGHT OR COCKTAIL, 1 OR 2 CONTROL PANELS

IMPORTANT NOTE:

The Chopper 1 conversion kit can be installed into a Cocktail model or an Upright model cabinet. When installing this game in a Cocktail table, you must change the setting of Switch 2 of Dipswitch Bank 1 to the ON position. This will cause the screen display to flip for the 2nd player's turn.

For installation into an Upright model cabinet with a single control panel, set switch 2 of Dipswitch Bank 1 to the OFF position. This will prevent the screen display from flipping during the 2nd player's turn. You must also connect the 2 player joystick and pushbutton control wires to the 1 player wires for proper operation. Failure to do this will cause the 2nd player to have no control action during his or her turn.

C. Preparing the Cabinet.

Select a cabinet that conforms to the requirements specified in the Special Requirements section. Make sure that the cabinet is of good quality and is in working condition. It is helpful to have a wiring diagram of the existing harnessing.

This SNK conversion kit is intended to replace the existing game controls and PCB. No modifications to the Primary AC section of the power supply are required or recommended. Modification of the Primary AC section, if not performed properly, can result in conducted radio frequency interference on the AC line service and may jeopardize the safety of players and service personnel.

Find and label the +5 vdc, +12 vdc, and -5 vdc connections to the power supply, as you will be using these with the new Main Harness supplied. You must use a minimum of (2) each for the +5 vdc and the Ground between the game PCB and the Power Supply for proper operation.

Find and label the Red, Green, Blue, Sync, and Video Ground wires from the game PCB to the monitor. Repeat these steps for the Coin Switch, Coin Counter, and Speaker wires. Disconnect and remove the existing harnessing that is not required and remove the old game PCB.

All existing cabinet graphics must be stripped or removed. Remove the Logo Plex, Monitor plex, and any cabinet graphics. You will need to use the existing Monitor plex, as this kit contains a new Monitor Tube Card with game instructions for placement underneath a clear Monitor plex. If the game you are converting uses a Monitor Glass with screened-on artwork, you will need to strip off the graphics or replace with a clear glass of the same dimensions. Using the Logo plex and Monitor plex as a template, cut the new Logo Plex and Monitor Tube Card down to the proper size.

Check the cabinet closely for imperfections to the surface and repair any damage necessary. This is a good time to re-paint the exterior of the cabinet to give it a fresh look.

Prepare the Control Panel by stripping off the controls and graphics. Examine the suggested control panel layout in figure 1 and determine what modifications are going to be necessary. Figure 2 contains hole sizes and drill patterns for the pushbuttons and the joystick. Drill and/or patch any required holes at this time.

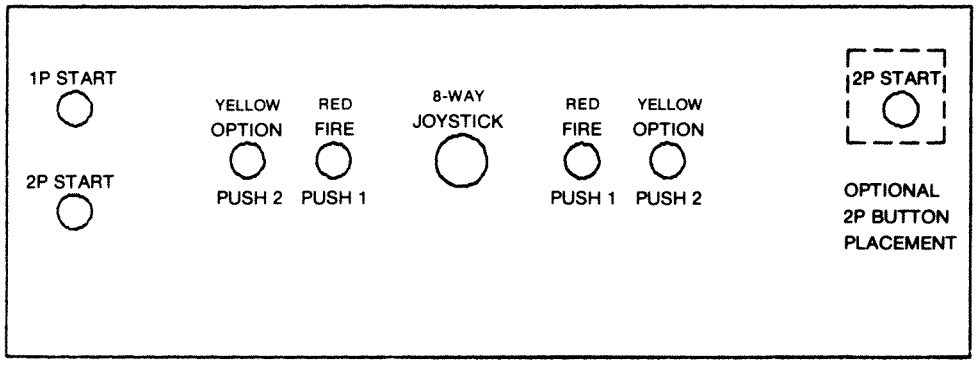

FIGURE 1

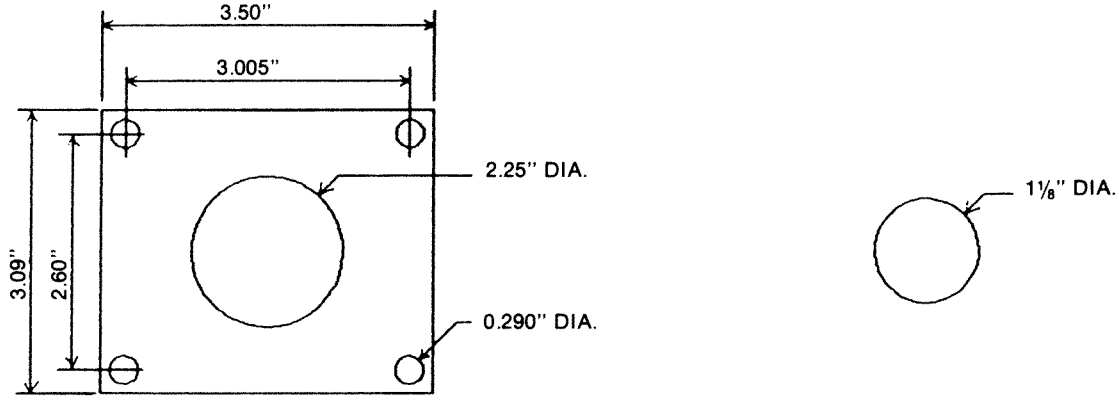

JOYSTICK

PUSHBUTTON

CONTROL CUT-OUT SIZES

FIGURE 2

2. INSTALLATION INSTRUCTIONS

A. Mounting the PCB set.

Select a position on the wall of the game to mount the PCB set, be certain to position it so that the harness has enough length to reach the monitor and control panel areas. Mount all four corners of the PCB using the mounting hardware supplied.

B. Control Panel Assembly.

Install the Control Panel Overlay by peeling off the paper backing, and carefully positioning the overlay down onto the control panel. Smooth out all of the creases starting in the center and working your way out toward the edges. When completely smooth, cut out the control holes using a small knife.

Install the pushbuttons and joystick into their proper positions and secure firmly. Mount the control panel assembly onto the cabinet at this time.

C. Installing the Main Harness.

Plug the 56 pin edge connector onto the PCB's edge connector, making certain that it is positioned correctly. Refer to the edge connector pin-out on page 7 for additional information on positioning. Be certain to use all supply voltage and ground wires supplied in the main harness for reliable operation and to prevent contact burning of the PCB.

Seperate the power supply wires, route them down to the power supply, and terminate as required. Route the Coin Switch and Coin Counter wires to the coin door area and terminate as required. NOTE: The game pcb utilizes open collector Coin Counter outputs allowing the use of either 6 volt or 12 volt coin counters. SNK recommends using a 12 volt coin counter. Wire it as shown in Figure 3.

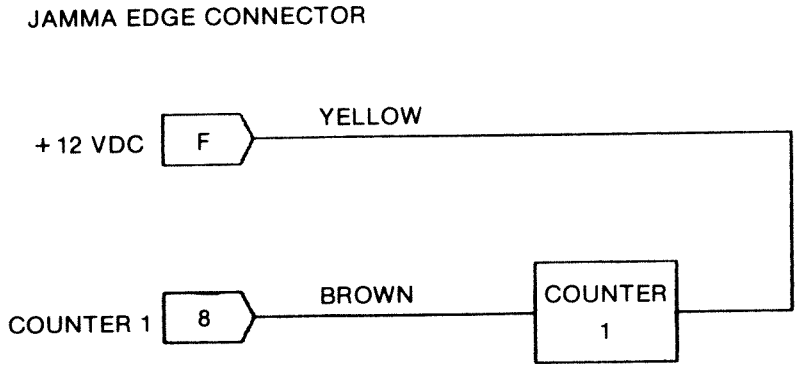

FIGURE 3

2C. Installing the Main Harness (continued)

Route the control switch wires up to the control panel assembly and terminate as required. As is typical of video games, all the switch inputs are active low, meaning that they must be at DC Ground (0 vdc) potential for the game pcb to "see" the switch. You will need to attach a DC Ground wire to the Common terminal of each control switch, and the respective control wire to the Normally Open terminal of each switch. NOTE: When installing this product into an upright model cabinet with a single control panel, you must connect the 2-Player joystick and pushbutton control wires to the 1-Player wires for proper operation. Failure to do this will cause the 2nd player to have no controls during his or her turn.

Install the speaker and monitor wires at this time. The SNK game PCB supplies negative (-) polarity Composite Video Sync. The proper input configuration to use depends on the brand and model of the monitor in your cabinet. For most applications, simply connect the (-) Video Sync wire from pin P of the edge connector to the (-) Horizontal Sync input of the monitor. If you experience vertical rolling and cannot stop it using the monitor's Vertical Hold control, you may have to jumper the (-) Video Sync signal to the (-) vertical input of the monitor.

BEFORE APPLYING POWER: Double check that the harness is wired correctly. Dis-connect the edge connector from the game PCB and apply power to the game. Test all DC voltages present at the edge connector with a Digital Volt-Meter and adjust the power supply for a +5.10 vdc reading between pins 1 and 3. Remove power and wait several minutes for the power supply to discharge before installing the edge connector onto the game pcb.

You may now test the game for proper operation of the controls, sound, and video displays. If any problem is detected, remove power to the game immediately and contact your Authorized Distributor for assistance.

D. Installing the Cabinet Graphics.

Install the Logo Plex (Marquee) and Side Decals. For best result, spray a light soap onto the sides of the cabinet just before applying the Side Decals to allow the decal to slip around for positioning. Use a squeegee to smooth out the decals and release trapped air bubbles.

Install the Monitor Underlay Card under a clear monitor plex. You may need to secure the underlay to the plex to prevent warping. Use clear tape along any un-exposed edges of the plex to secure.

Congratulations, you have completed the installation of your new SNK conversion kit!

3. GAME INFORMATION

A. Dipswitch Selectable Options.

DIPSWITCH 1	1	2	3	4	5	6	7	8
NORMAL SCREEN	OFF							
REVERSE SCREEN	ON							
TABLE CABINET		~~OFF~~						
UPRIGHT CABINET		~~ON~~						
2ND BONUS EXTEND			OFF					
EVERY BONUS EXTEND			ON					
CHOPPERS = 3				OFF				
CHOPPERS = 5				ON				
COIN 1/CREDIT 1/1					OFF	OFF		
2/1					ON	OFF		
3/1					OFF	ON		
4/1					ON	ON		
COIN 2/CREDIT 1/6							OFF	OFF
1/4							ON	OFF
1/3							OFF	ON
1/2							ON	ON

DIPSWITCH 2		1	2	3	4	5	6	7	8
PLAY LEVEL	(2)NORMAL	OFF	OFF						
	(1)EASY	ON	OFF						
	(3)HARD	OFF	ON						
	(4)HARDEST	ON	ON						
DEMO MODE	YES			OFF	OFF				
SOUND	NO			ON	OFF				
INFINITE LIVES				OFF	ON				
FREEZE DISPLAY				ON	ON				
EXTEND	50K / 100K					OFF	OFF		
	75K / 150K					ON	OFF		
	100K / 200K					OFF	ON		
	NO / NO					ON	ON		
CONTINUE PLAY ON								OFF	
CONTINUE PLAY OFF								ON	
NORMAL GAME MODE									OFF
NO DIE MODE									ON

B. MAIN HARNESS EDGE CONNECTOR PIN-OUT.

The Chopper 1 PCB utilizes a JAMMA (Japanese Amusement Machine Manufacturers Association) standard edge connector. The pin-out diagram and wire colors are indicated below.

CONNECTOR CR7E - 56DA - 3.96E (HIROSE)

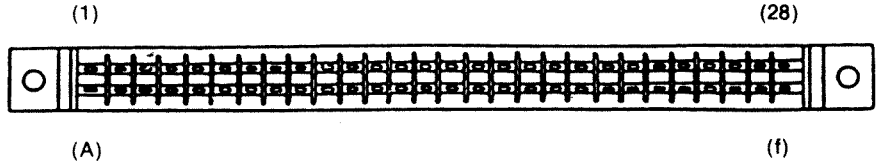

Color Key: Stripe / Background

WIRE COLOR	SOLDER SIDE	PIN NAME	PIN #	PARTS SIDE	WIRE COLOR
BLACK	Ground	A	1	Ground	Black
BLACK	Ground	B	2	Ground	Black
RED	+5VDC	C	3	+5VDC	RED
RED	+5VDC	D	4	+5VDC	RED
GREEN	-5VDC	E	5	-5VDC	GREEN
YELLOW	+12VDC	F	6	+12VDC	YELLOW
		H	7		
		J	8	Coin Counter 1 (-)	BROWN
		K	9		
WHITE	Speaker (-)	L	10	Speaker (+)	WHITE
		M	11		
LIGHT GREEN	Video Green	N	12	Video Red	PINK
GRAY/WHITE	Video Sync	P	13	Video Blue	LIGHT BLUE
VIOLET	Service Switch	R	14	Video Ground	BLACK
GRAY	tilt/reset	S	15	test switch	ORANGE
		T	16	Coin Switch 1	white/violet
WHITE/BLACK	Start Switch 2	U	17	Start Switch 1	white/black
BROWN/BLACK	2P Control 1 UP	V	18	1P Control 1 UP	white/brown
RED/BLACK	2P Control 2 DOWN	W	19	1P Control 2 DOWN	white/red
ORANGE/BLACK	2P Control 3 LEFT	X	20	1P Control 3 LEFT	white/orange
YELLOW/BLACK	2P Control 4 RIGHT	Y	21	1P Control 4 RIGHT	white/yellow
GREEN/BLACK	2P Control 5 PUSH 1	Z	22	1P Control 5 PUSH 1	white/green
BLUE/BLACK	2P Control 6 PUSH 2	a	23	1P Control 6 PUSH 2	white/blue
		b	24		
		c	25		
		d	26		
BLACK	Ground	e	27	Ground	BLACK
BLACK	Ground	f	28	Ground	BLACK