
CAPCOM
CYBERBOTS
FULLMETAL MADNESS

CYBERBOTS™

FULLMETAL MADNESS

©CAPCOM 1994, 1995 ALL RIGHTS RESERVED.

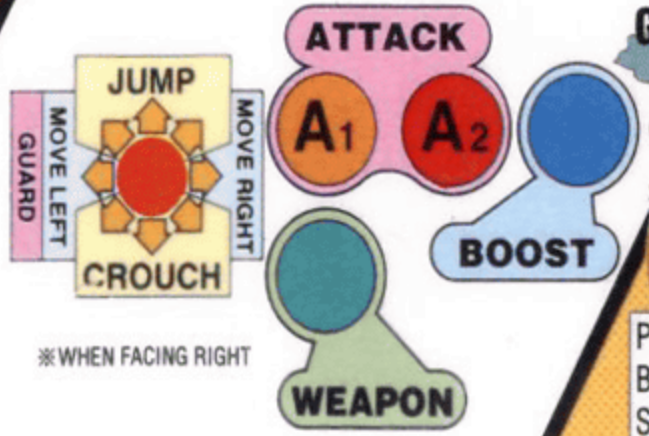

※WHEN FACING RIGHT

SPECIAL ATTACKS!!



HOLD DOWN 2 ATTACK BUTTONS AND CHARGE THE POWER!

GIGA CRUSH



CYBER SPECIAL



POWER

UNLEASH THESE SPECIAL ATTACKS WHEN THE POWER IS FULLY CHARGED!

PUSH 2 ATTACK BUTTONS SIMULTANEOUSLY



POWER UP



ATTACKING POWER IS INCREASED WHILE YOUR ROBOT'S BODY IS FLASHING!

BOOST & SAFE LANDING

WHEN BEING THROWN, PUSH THE BOOST BUTTON RAPIDLY FOR THE SAFE LANDING!



CAPCOM



BX-02
BLODIA

- IRON THRUSTER ↻ + ATTACK
- FIREBALL ↓↘→ + ATTACK
- DEAD END ↓ + ATTACK
- POWER BUSTER NEAR THE OPPONENT ↓↘→ + ATTACK 2



BX-04S
SWORDSMAN

- HEAT SLASHER ↓ + ATTACK
- WAVE LASER EVEN IN THE AIR ↓↘→ + ATTACK
- GROUND CRAWLER ↓↙← + ATTACK



BX-07R
RIOT

- RIOT PUNCH EVEN IN THE AIR ↻ + ATTACK
- GROUND BREAKER ↓ + ATTACK
- RIOT STRIKE EVEN IN THE AIR ↓↙← + ATTACK
- DEVIL CLAW NEAR THE OPPONENT ↓↘→ + ATTACK



FZ-100
FORDY

- KEEN NAIL ↻ + ATTACK
- SUNRISE KICK ↓↙← + ATTACK
- SPIRAL CHAIN ← CHARGE → + ATTACK

CYB954A03-1

CYBERBOTS
FULLMETAL MADNESS

※WHEN FACING RIGHT

©CAPCOM 1994, 1995 ALL RIGHTS RESERVED.

CAPCOM

FZ-202 TRANTULA



- RISING TORNADO — FORWARD ↓↘→ + ATTACK / BACKWARD ↓↙← + ATTACK
- TARANTULA STOMP — CHARGE ↓ + ATTACK
- TARANTULA SLAM — ↓↘→ + ANY ATTACK OR BOTH (AFTER GRAB: IN THE AIR ↓↘→ + ANY ATTACK OR BOTH)
- MISSILE CHAOS — ↓ + ATTACK

FZ-900J KILLER BEE



- KILLER DRILL α — ↓↘→ + ANY ATTACK OR BOTH
- KILLER DRILL β — ↓↘→ + ATTACK
- COLD SLASHER — ↓ + ATTACK
- EVIL EYE — CHARGE ←→ + ATTACK

RF-004 REPTOS



- VIOLENT TACKLE — ↓ + ATTACK
- SATELLITE LASER — ↓↙← + ANY ATTACK OR BOTH
- IRON NAIL — ↓↘→ + ATTACK
- POWER SLAM — NEAR THE OPPONENT ↓ + ATTACK

RF-009 LIGHTNING



- SPARKLE LASER — ↓ + ATTACK
- SPIKE WHEEL — EVEN IN THE AIR ↓ CHARGE ↑ + ATTACK
- LIGHTNING LASER — ↓ + ATTACK

RF-027 JACKAL



- BOOMERANG FANG — EVEN IN THE AIR ↓ + ATTACK
- HEAT WHIP — ↓↘→ + ATTACK
- JACKAL STOMP — CHARGE ↓ + ATTACK
- LASER BIT — ↓↘→ + WEAPON / ↓ + WEAPON

GP-N1 GULDIN



- POWER LARIAT — ↓↘→ + ATTACK
- AIR LARIAT — ↓ + ATTACK
- SWING KICK — ↓↙← + ATTACK

GP-V4 VISE



- EARTH CRAWLER — ↓ + ATTACK
- POWER POUNDER — ↓↘→ + ANY ATTACK OR BOTH (AFTER GRAB)
- GIANT SWING — ↓ + ATTACK
- POWER BUTT — NEAR THE OPPONENT ↓↙← + ATTACK

GP-D2 CYCLONE



- DRILL CANNON — ↓↘→ + ATTACK
- DEATH DRILL — ↓↘→ + PUSH ATTACK RAPIDLY
- CYCLONE STOMP — CHARGE ↓ + ATTACK
- CYCLONE BOMB — FAR ↓↘→ + WEAPON / NEAR ↓ + WEAPON

CYB954A03-2

CYBERBOTS™

FULLMETAL MADNESS

©CAPCOM 1994, 1995 ALL RIGHTS RESERVED.

OPERATORS MANUAL



WARNING

This game is for use in the United States of America and Canada. Sales, export or operation outside of these countries may be construed as copyright and trademark infringements and is strictly prohibited. Violators are subject to severe penalties and will be prosecuted to the full extent of the law.

CAPCOM® COIN-OP, INC.
3311 N. Kennicott Road
Arlington Heights, Illinois 60004
Phone: (708) 797-6100
Fax: (708) 797-6306

PM00124-KIT
062895

THANK YOU FOR PURCHASING *CYBERBOTS™: FULLMETAL MADNESS* VIDEO KIT. WE INVITE YOU TO USE THE FOLLOWING MAILING ADDRESS, TELEPHONE OR FAX NUMBER FOR PARTS OR SERVICE INFORMATION CONCERNING THIS GAME:

CAPCOM® COIN-OP, INC.
ATTN: FIELD SERVICE - VIDEO PRODUCTS
3311 N. KENNICOTT ROAD
ARLINGTON HEIGHTS, ILLINOIS 60004
PHONE: (708) 797-6100
FAX: (708) 797-6306

IF YOU PURCHASED A COMPLETE KIT ("A" KIT), THE SERIAL NUMBERS OF YOUR GAME ARE LOCATED ON BOTH THE TOP "B" CARTRIDGE AND THE BOTTOM "A" CARTRIDGE (RECORD THEM HERE):

A-BOARD SERIAL # _____
B-BOARD SERIAL # _____
AAMA SERIAL # _____

IF YOU PURCHASED THE "B" KIT, RECORD THE FOLLOWING SERIAL NUMBERS FROM THE TOP OF THE CASE (B-BOARD):

B-BOARD SERIAL # _____
AAMA SERIAL # _____

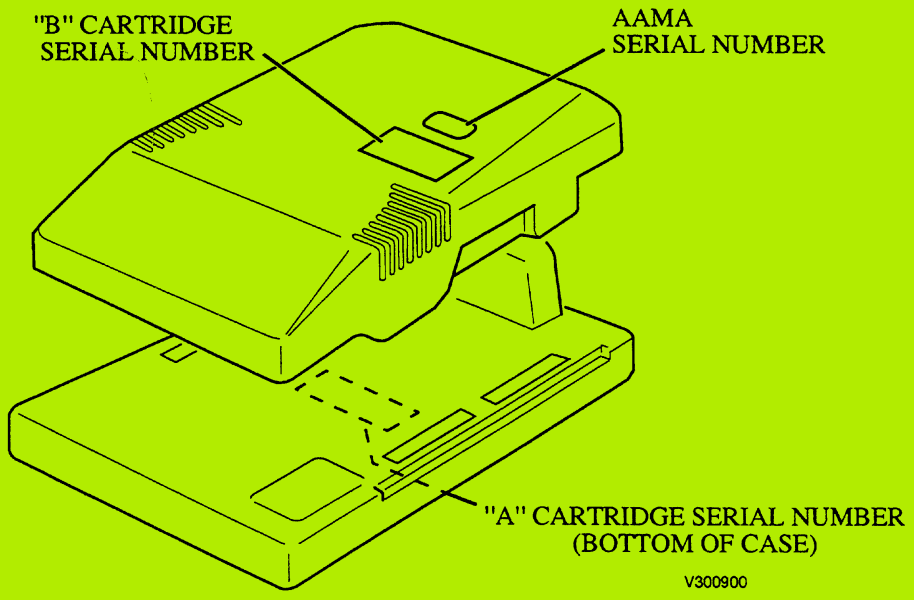

PLEASE HAVE THESE SERIAL NUMBERS AVAILABLE WHEN CONTACTING US FOR SERVICE INFORMATION.

Proprietary and confidential information, not to be disclosed or copied without the express permission of CAPCOM® COIN- OP, INC.

TABLE OF CONTENTS

Warranty Information i

Kit Inspection 1

Kit Installation
- "A" Kit Installation 3
  - Preparation 3
  - Installation 3
    - Marquee 3
    - Control Panel Wiring 4
    - Test Bracket 6
    - Game Cartridges 6
- "B" Kit Installation 7
  - Preparation and Installation 7

Test Mode
- Test Menu 9
  - Accessing the Menu 9
  - How to Select an Item 9
  - Closing the Menu 9
  - Menu Item Descriptions 10
- Configuration Menus 11
  - Accessing the Menus 11
  - Changing the Settings 13
  - Saving and Closing the Menu 13
  - Menu Option Settings 13
  - Menu Item Descriptions 15

JAMMA Connections 18
Auxiliary Cable Connections 18

Template : Control Panel Drill Hole(s)

Proprietary and confidential information, not to be disclosed or copied without the express permission of CAPCOM® COIN-OP, INC.

LIMITED PRODUCT WARRANTY
(APPLIES TO DOMESTIC SALES ONLY)

CAPCOM® COIN-OP, INC. (Seller), warrants only to the initial purchaser of its products, that the items listed below are free from defects in material and workmanship under normal use and service for the warranty periods specified:

A. CP System II Cartridges	One (1) Year
B. Electronic and Mechanical Components:	(90) days

No other part of Seller's products are warranted.

Warranty periods are effective from the initial date of shipment from seller to its authorized

Seller's sole liability shall be, at its option, to repair or replace products which are returned to Seller during the warranty periods specified, provided:

A. Seller is notified promptly upon discovery by buyer that stated products are defective.

B. Such products are properly packaged and then returned, prepaid to Seller's designated

This warranty does not apply to any parts damaged during shipment or handling, or due to improper installation or usage, or alteration. In no event shall Seller be liable for any anticipated profits, loss of profits, loss of use, incidental or consequential damages or any other losses incurred by the customer in connection with the purchase of a CAPCOM® COIN-OP, INC. product.

WARRANTY DISCLAIMER

EXCEPT AS SPECIFICALLY PROVIDED IN A WRITTEN CONTRACT BETWEEN SELLER AND PURCHASER, THERE ARE NO OTHER WARRANTIES, EXPRESSED OR IMPLIED, INCLUDING ANY IMPLIED WARRANTIES OF MERCHANTABILITY OR FITNESS FOR A PARTICULAR PURPOSE.

IMPORTANT NOTICE

THIS SHIPMENT HAS BEEN CAREFULLY INSPECTED AND PROPERLY PACKAGED BEFORE LEAVING THE FACTORY. WE CANNOT ASSUME RESPONSIBILITY FOR BREAKAGE THAT MAY OCCUR DURING TRANSPORTATION OF THE GAME. IF THIS GAME IS DAMAGED UPON RECEIPT FROM THE CARRIER, IMMEDIATELY NOTIFY THE CARRIER AND FILE A DAMAGE REPORT.

Proprietary and confidential information, not to be disclosed or copied without the express permission of CAPCOM® COIN-OP, INC.

KIT INSPECTION

There are two kits available for conversion to ***CYBERBOTS™: FULLMETAL MADNESS,*** an "A" kit and a "B" kit. An "A" kit contains the complete game cartridges, all necessary graphics, and replacement joysticks and button switches. The "A" kit is intended for conversion of most JAMMA-compatible, horizontal screen cabinets.

The "B" kit is compatible only with current CAPCOM® System II games. It is similar to the "A" kit but does not include both cartridges (only the B cartridge is supplied). Also, additional conversion parts not included.

Check that all parts have been shipped with your kit. If any parts are missing, contact your distributor immediately.

PARTS LIST

"A" KIT	"B" KIT	PART NO.	DESCRIPTION	QTY.
√		A-00449	CP System II (A/B cartridges)	1
	√	A-00451	CP System II (B cartridge)	1
√	√	GE1200	Monitor Card	1
√	√	AW00152	Marquee	1
√	√	06-0074	Overlay, Control Panel	1
√	√	AW00154	Decal, Joystick & Button Switches	1
√	√	AW00147	Decal, "CAPCOM® COIN-OP, INC." Cabinet	2
√	√	PM00124-KIT	Manual, Operators	1
√		03-0052	Cable, Auxiliary	1
√		GE2030	Joystick	2
√		16-0130	Switch, 1-Player Start Button (White)	1
√		16-0131	Switch, 2-Player Start Button (White)	1
√		16-0133	Switch, Button (Red)	2
√		16-0134	Switch, Button (Blue)	2
√		16-0136	Switch, Button (Green)	2
√		16-0147	Switch, Button (Yellow)	2
√		03-0050	Bracket, Volume/Test	1
√		13-0066	Bracket, A-Cartridge Mounting	4
√		SC00104-05	Screw, Wood	4

Proprietary and confidential information, not to be disclosed or copied without the express permission of CAPCOM® COIN-OP, INC.

CAUTION

Please read the following instructions to keep the PC board in good condition:

- Do not block the ventilation slots.
- Do not drop or bump the board.
- Do not spill any liquids on the case.
- Do not disassemble the case.



Ni-cd

ATTENTION

The product that you have purchased contains a rechargeable battery. The battery is recyclable. At the end of its useful life, under various state and local laws, it may be illegal to dispose of this battery into the municipal waste system. Check with your local solid waste official for details in your area for recycling options or proper disposal.

DISASSEMBLING THE CASE OR REMOVING THE STICKER MAY CAUSE THE TERMINATION OF YOUR REPAIR WARRANTY.

Proprietary and confidential information, not to be disclosed or copied without the express permission of CAPCOM® COIN-OP, INC.

"A" KIT INSTALLATION

WARNING:

MAKE SURE ELECTRICAL POWER TO THE GAME IS OFF BEFORE STARTING THE KIT INSTALLATION.

PREPARATION

1. Disconnect and remove the old printed circuit board(s) from the cabinet.

2. Remove or open the control panel, and disconnect and remove the buttons and joystick(s) from the control panel.

3. Remove any covering from the control panel overlay, and then remove the control panel overlay.

4. Place the Drill Hole template over the control panel to determine where any new holes should go. Center punch any needed new holes on the control panel.

5. Cut out the new holes using a 1-3/16" hole saw.

6. If there is an additional control panel cover (such as plastic or lexan) that will be utilized, cut any additional holes using the same template.

7. Plug up unused holes with a wood dowel (1-1/8" diameter) and sand any rough edges.

INSTALLATION

Marquee Installation

8. Remove the marquee glass, old marquee overlay, and the old cabinet graphics.

9. Install the new marquee and replace the glass.

Control Panel Overlay Installation (See Figure 1)

10. The control panel overlay in the kit is oversized to accommodate most control panel sizes. Center the overlay on the control panel, leaving some excess material at the edges.

11. Remove the protective backing from the overlay and press it down on the control panel, keeping it properly aligned. Press it down firmly, smooth out any bubbles, and press it over the edges.

12. Trim any excess from the overlay. Place the drill hole template on top of the overlay, aligning it with the joystick holes. Pierce through the overlay at each control panel hole. Then, cut away overlay material covering the joystick and button holes. Remove the template and clean off the overlay.

13. Peel off the backings of the 4-button and joystick decals, align over the control panel holes, and press in place on the overlay (refer to the drill hole template for proper placement). Using a knife, trim material from the center hole of the joystick decal.

14. Install the control panel cover (if required).

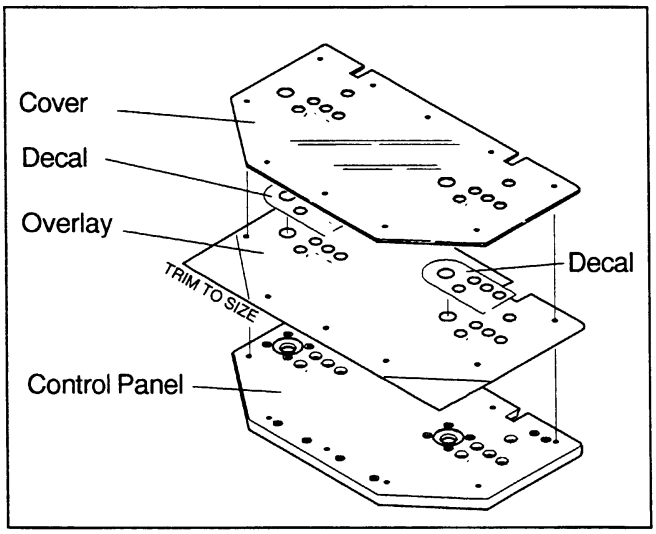

FIGURE 1
Overlay Installation

Reassembly of Components

15. Install all buttons and retaining rings on the control panel as shown in Figure 2. Install a RED button to the immediate right of each joystick, install a BLUE button to the right of the red one, and install a GREEN button to the right of the BLUE one. Install a YELLOW button below the RED one.

Proprietary and confidential information, not to be disclosed or copied without the express permission of CAPCOM® COIN-OP, INC.

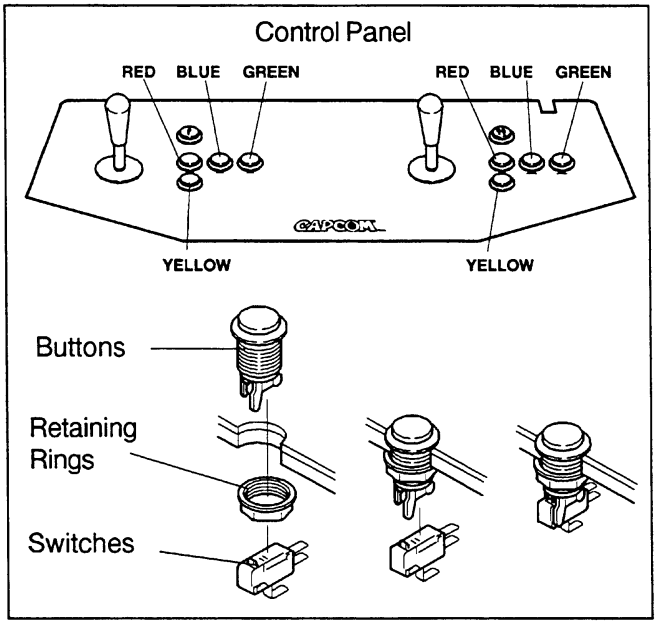

FIGURE 2
Control Panel Buttons and Switches

16. Notice that there are two white buttons. (See Figure 3.) Install the PLAYER ONE button on the top left-hand side of the control panel, and the PLAYER TWO button on the top right-hand side of the control panel. The WHITE buttons are START buttons.

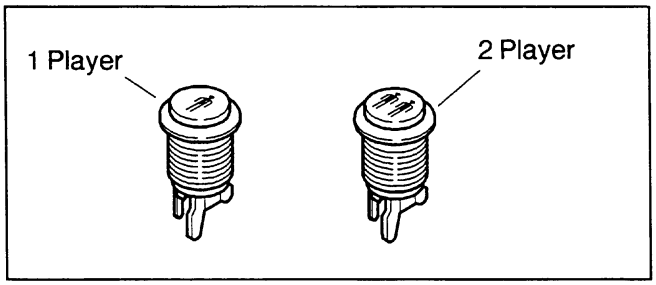

FIGURE 3
Function and Start Buttons

17. Install the switches on the buttons as shown in Figure 2. Orient the switches so that when a button is pressed, the red contact on the switch is depressed.

18. Install the joysticks on the control panel as shown in Figure 4.

Wiring

NOTE:
All switch wires used in this game must be wired to the normally-open connection on the switches. Each switch requires a ground wire on the common connector and the appropriate control or switch wire on the normally-open connector of the switch.

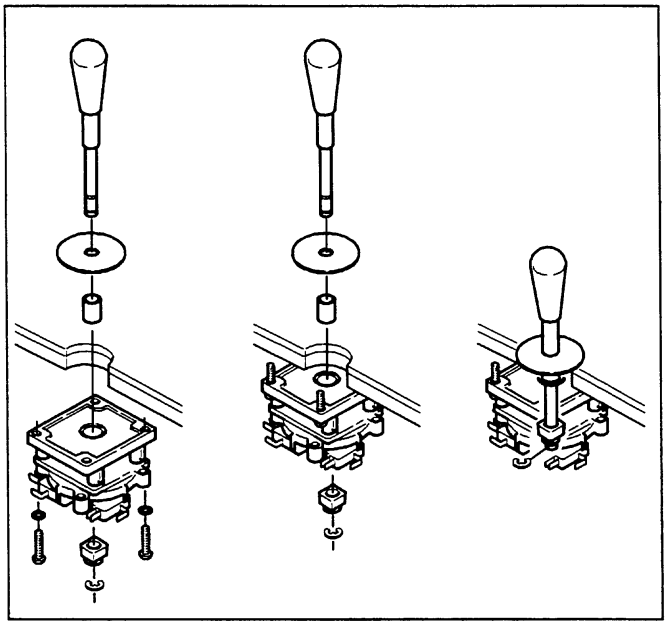

FIGURE 4
Joystick Installation

19. Reconnect the existing JAMMA connectors to the control panel according to the chart of Figure 5.

20. Connect the Player 1 and Player 2 Kick buttons to the auxiliary cable harness connectors shown in Figure 6. Make the connections according to the chart of Figure 7.

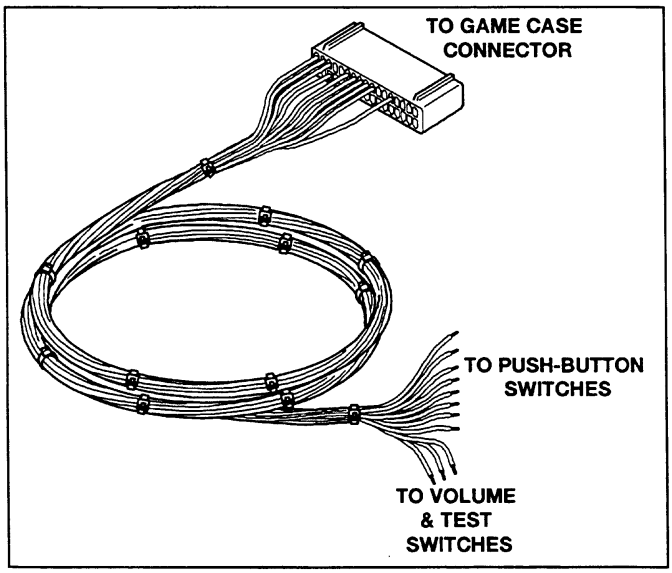

FIGURE 6
Auxiliary Cable Harness

Proprietary and confidential information, not to be disclosed or copied without the express permission of CAPCOM® COIN-OP, INC.

JAMMA CONNECTOR REF.	*WIRE COLOR	CONNECTS TO	COMPONENT	FUNCTION
18	WHITE/BLACK	PLAYER 1	JOYSTICK	UP
19	WHITE/BROWN	PLAYER 1	JOYSTICK	DOWN
20	WHITE/RED	PLAYER 1	JOYSTICK	LEFT
21	WHITE/ORANGE	PLAYER 1	JOYSTICK	RIGHT
22	WHITE/YELLOW	PLAYER 1	BUTTON SWITCH	ATTACK 1
23	WHITE/GREEN	PLAYER 1	BUTTON SWITCH	ATTACK 2
24	WHITE/BLUE	PLAYER 1	BUTTON SWITCH	BOOST
V	VIOLET/BLACK	PLAYER 2	JOYSTICK	UP
W	VIOLET/BROWN	PLAYER 2	JOYSTICK	DOWN
X	VIOLET/RED	PLAYER 2	JOYSTICK	LEFT
Y	VIOLET/ORANGE	PLAYER 2	JOYSTICK	RIGHT
Z	VIOLET/YELLOW	PLAYER 2	BUTTON SWITCH	ATTACK 1
a	VIOLET/GREEN	PLAYER 2	BUTTON SWITCH	ATTACK 2
b	VIOLET/BLUE	PLAYER 2	BUTTON SWITCH	BOOST

Figure 5: JAMMA Wiring Connections

*** Wire Color Note:** Wire colors shown are according to the AAMA -AMOA Standard for wire color assignments; your harness may contain different colors than shown above.

AUXILIARY CABLE CONNECTOR REF.	WIRE COLOR	CONNECTS TO	COMPONENT	FUNCTION
34	BLACK	PLAYER 1	BUTTON SWITCH	COMMON
19	BLUE	PLAYER 1	BUTTON SWITCH	WEAPON
33	BLACK	PLAYER 2	BUTTON SWITCH	COMMON
21	GRAY/YELLOW	PLAYER 2	BUTTON SWITCH	WEAPON
29	GRAY/YELLOW	TEST BRACKET	VOLUME SWITCH	UP
30	PINK/YELLOW	TEST BRACKET	VOLUME SWITCH	DOWN
31	BLACK/WHITE	TEST BRACKET	VOLUME SWITCH	COMMON

Figure 7: Auxiliary Cable Wiring Connections

Proprietary and confidential information, not to be disclosed or copied without the express permission of CAPCOM® COIN-OP, INC.

21. An optional Test/Volume bracket (see Figure 8) is included in this kit. Your cabinet may already contain this bracket. If you decide to install, the bracket should be mounted inside the coin door and on top of the cash box for easy access.

NOTE: The "A" game cartridge also contains the same Test and Volume functions found on the test bracket.

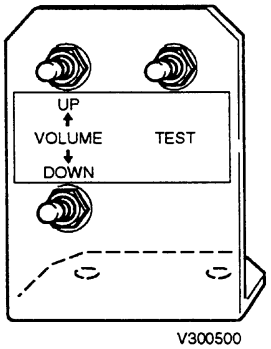

Figure 8: Test Bracket

Wiring of the Test Bracket requires connections to both the main JAMMA harness as well as the auxiliary cable harness (refer to Figure 9).

LEAD WIRE COLOR	SWITCH FUNCTION	CONNECTS TO
YELLOW	VOLUME-UP	AUX. CABLE '29'(GRAY/ YELLOW)
GREEN	COMMON	AUX. CABLE '31'(BLACK/ WHITE)
BLACK	VOLUME-DOWN	AUX. CABLE '30'(PINK/ YELLOW)
GREEN	COMMON	AUX. CABLE '31'(BLACK/ WHITE)
BROWN	TEST	JAMMA '15'
BLACK	GROUND	JAMMA 'A' or 'B' or 'e' or 'f' or '1' or '2' or '27' or '28'

Figure 9: Test Bracket Wiring Chart

GAME CARTRIDGE INSTALLATION

22. Install the four (4) mounting brackets to the underside of the "A" cartridge as shown in Figure 10.

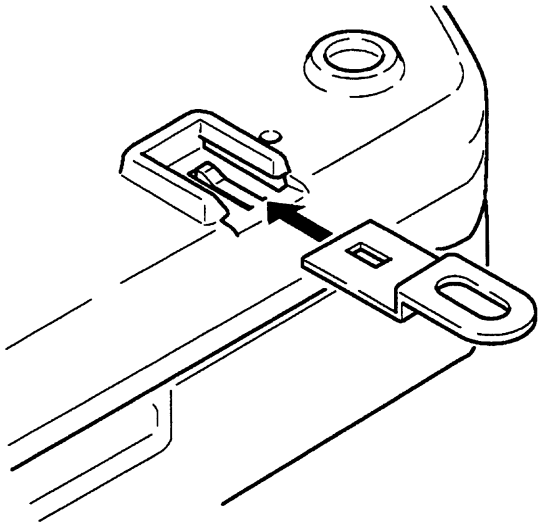

Figure 10: Mounting Bracket Installation

24. Using the supplied wood screws, fasten the game cartridge case to the control panel shelf, as shown in Figure 11.

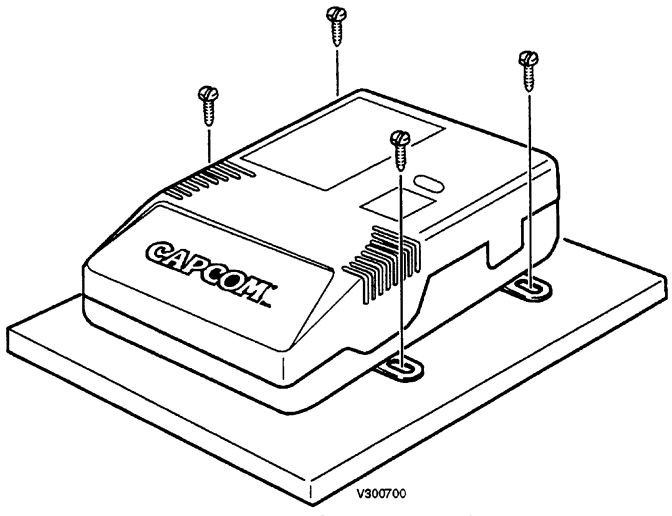

Figure 11: Case Mounting

25. Connect the JAMMA harness connector and the auxiliary cable connector to the "A' cartridge. If your cabinet is equipped with Q-SOUND, also attach the audio cables.

Proprietary and confidential information, not to be disclosed or copied without the express permission of CAPCOM® COIN-OP, INC.

WARNING

Improper installation of the JAMMA harness connector to the game cartridge will cause damage to the enclosed PCB.

26. Power-up the game and set all operator adjustable options by pressing the **TEST** switch. Follow the instructions under the **Test Mode** section of this manual.

"B" KIT INSTALLATION

1. To install the kit graphics, you must follow the "A" Kit Preparation and Installation Procedure, steps 3 through 20.

2. To remove the existing "B" cartridge from the "A" cartridge, pull the case clamps apart (see Figure 12). Carefully remove the old "B" cartridge and install the new "B" cartridge. Re-install the case clamps.

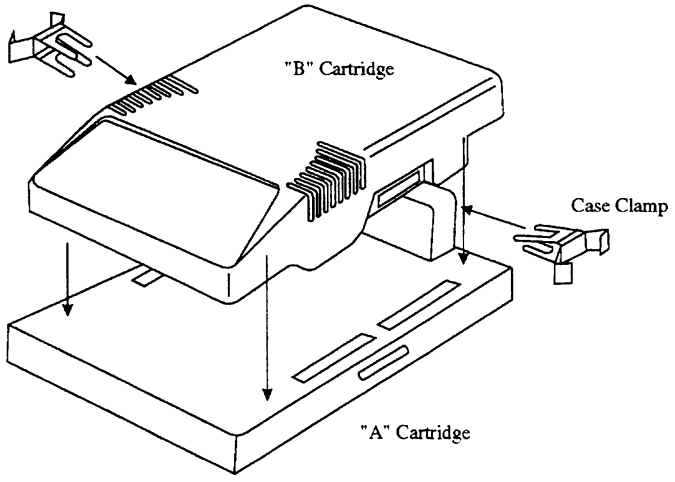

Figure 12 : Cartridge Seperation

WARNING

FURTHER DISASSEMBLY OF EITHER GAME CARTRIDGE WILL VOID YOUR WARRANTY.

3. Power-up the game and set all operator adjustable options by pressing the **TEST** switch. Follow the instructions under the **Test Mode** section of this manual.

Proprietary and confidential information, not to be disclosed or copied without the express permission of CAPCOM® COIN-OP, INC.

NOTES

Proprietary and confidential information, not to be disclosed or copied without the express permission of CAPCOM® COIN-OP, INC.

TEST MENU

The test menu allows you to test the functions and configure the game. These items include input devices such as joysticks, buttons and coin mechs, output devices such as monitor, speakers and meters. Through the Test Menu you can also access the Configuration Menu, where you can change the settings of the game.

1. ACCESSING THE TEST MENU

- **For a CAPCOM cabinet, or a cabinet equiped with a test switch:**
  Make sure the game is on and push the test switch. The screen shown below will appear.
- **For a cabinet without a test switch:**
  Push the test switch on the side of the blue plastic game casing. (Refer to the inside back cover of the manual.)

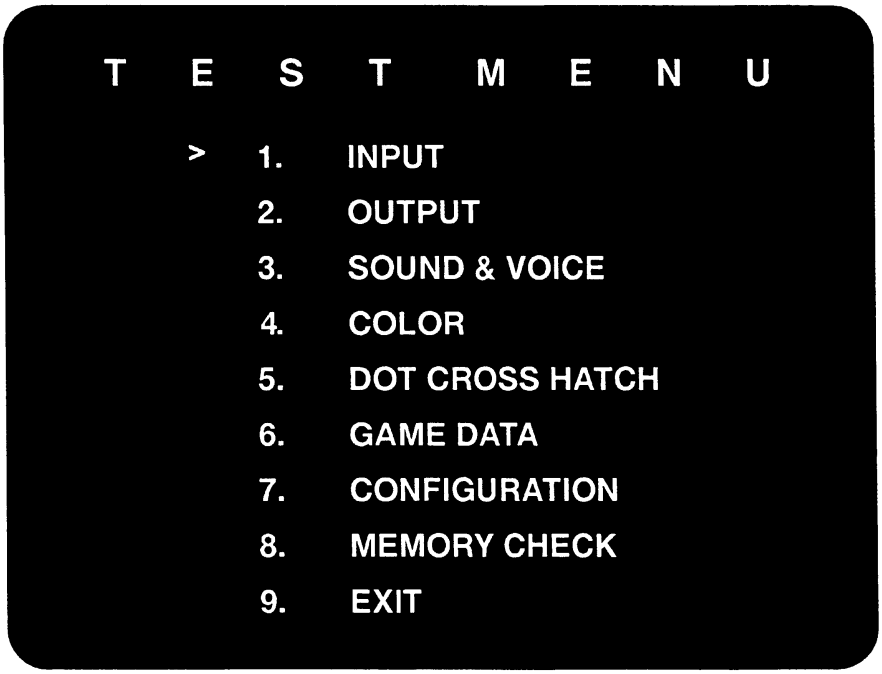

2. HOW TO SELECT AN ITEM

- Use the Player 1 Joystick to Move the arrow in front of the desired item and press the Player 1 SHOT 1 button.
- To return to the test menu, push the Player 1 Start and Player 2 Start Buttons simultaneously.
  The test menu automatically appears:
  - After you exit the **"7. "CONFIGURATION MENU"**.
  - After the memory is tested from the menu, **"8. MEMORY CHECK"**.

3. CLOSING THE TEST MENU

To close the Test Menu, highlight **"9. EXIT"** and push the Player 1 SHOT 1 button.

Proprietary and confidential information, not to be disclosed or copied without the express permission of CAPCOM® COIN-OP, INC.

4. TEST MENU ITEM DESCRIPTIONS

INPUT	Used to test all the input switches, such as joysticks and buttons. The "0" changes to a "1" as the button is pushed or joystick is moved. Check connections and switches in case the "0" doesn't change to a "1" when depressed or moved.
OUTPUT	Used to test the coin meter and the coin lock
SOUND & VOICE	Select a code of SOUND or VOICE with the Player 1 Joystick. Push the Player 1 SHOT 1 button to hear the sound of the selected code.
COLOR	Shows color bars of red, green, blue and white. Adjust RGB and brightness to obtain the optimum color balance and solid black background.
DOT CROSS HATCH	Used to test the screen size, focus and distortion.
GAME DATA	Counter information and the average of the game played time will be displayed.
CONFIGURATION	Used to change the game play settings. Refer to the CONFIGURATION MENU section.
MEMORY CHECK	Used to test memory. "OK" appears when each block of memory passes test "ERROR" appears in case of malfunction. If "ERROR" appears, repeat the memory test. Contact your distributor if "ERROR" still appears.
EXIT	Select this item and push the Player 1 SHOT 1 button to return to game play mode.

Proprietary and confidential information, not to be disclosed or copied without the express permission of CAPCOM® COIN-OP, INC.

CONFIGURATION MENUS

The Configuration Menu is used to change various game settings such as level of difficulty, credits, sound configuration, etc. These settings are stored in memory on the PCB rather than DIP switches. To change configuration settings you must enter test mode and then access the Configuration Menu.

The Configuration Menu is divided into 2 sections. In the System Configuration section, you can change system credits, sound, and coin mech configuration. In the Game Configuration section, you can change game play difficulty level and game duration.

1. ACCESSING THE CONFIGURATION MENU

- From the Test Menu, move the arrow to **"7. CONFIGURATION"** and push the Player 1 SHOT 1 button. The screen below will be displayed. A description of each option is discussed in the table below.

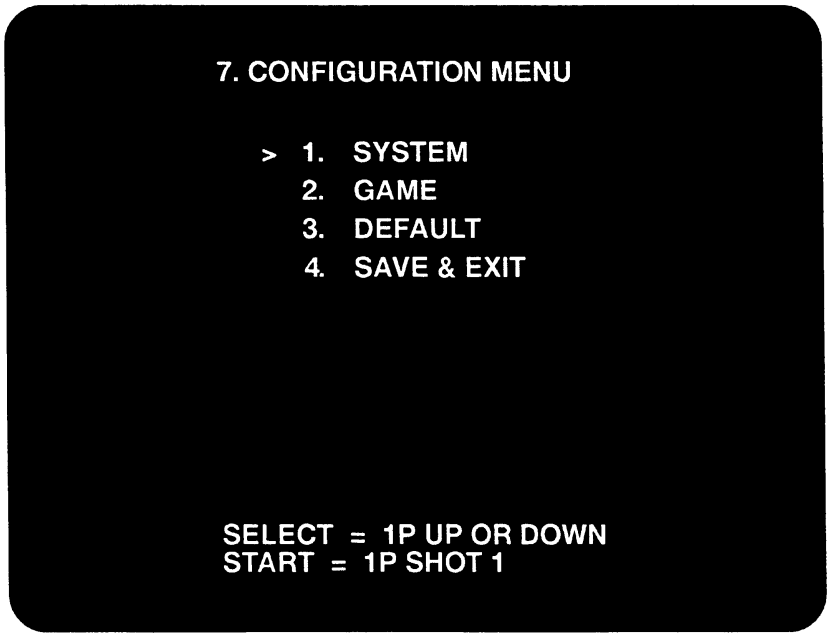

SYSTEM	Use this screen to change system configuration such as credits, monitor flip, sound and coin mech configuration.
GAME	Use this screen to change difficulty level, damage level, time count speed, maximum number of rounds and event type.
DEFAULT	Use this to return configuration to factory settings. To insure that settings are not defaulted by accident the **Player 1 SHOT 1 and Player 1 SHOT 2 buttons must be pressed at the same time.**
SAVE & EXIT	Use this to save new configuration settings and exit to Test Menu.

Proprietary and confidential information, not to be disclosed or copied without the express permission of CAPCOM® COIN-OP, INC.

To access the System or Game Configuration menus from the screen display, move the arrow with the joystick until it is to the left of the desired menu and press the Player 1 SHOT 1 button. Below are samples of the System and Game Configuration Menus.

SYSTEM CONFIGURATION MENU

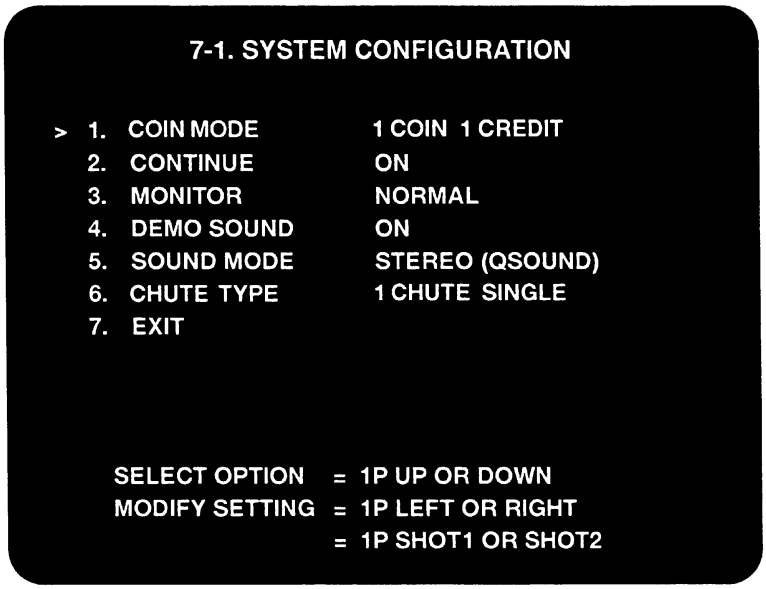

GAME CONFIGURATION MENU

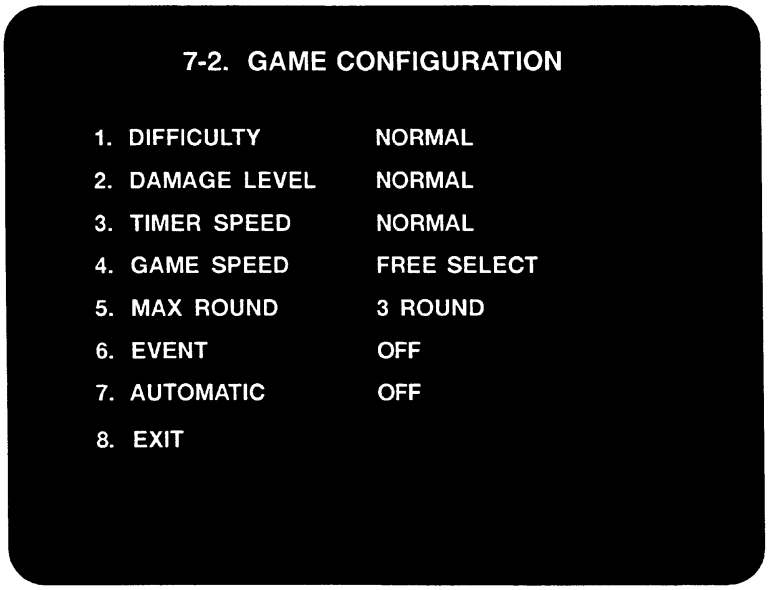

Proprietary and confidential information, not to be disclosed or copied without the express permission of CAPCOM® COIN-OP, INC.

2. CHANGING THE CONFIGURATION SETTINGS

- Move the Player 1 Joystick UP or DOWN to highlight the desired option. Once the option is highlighted, move the Joystick LEFT or RIGHT, or press the Player 1 SHOT 1 button to change the setting. Refer to the 4. Menu Option Settings section for option settings.

3. SAVING SETTINGS AND CLOSING THE MENU

- Once the configuration settings are changed in either the System or Game Configuration Menus, move the arrow to the EXIT option in each respective menu and press the Player 1 SHOT 1 button. This will return you to the Configuration Menu.
- At the Configuration Menu move the arrow to **4. SAVE & EXIT** and press the Player 1 SHOT 1 button. You will be returned to the Test Menu.
- A message **"SAVING NEW CONFIGURATION IN EEPROM"** appears while new settings are being saved. It takes one or two seconds to save the new settings. Do not turn off the power switch while saving is in process.
- From the Test Menu move the arrow to **9. EXIT** and press the Player 1 SHOT 1 button. This will return you to game mode.

4. MENU OPTION SETTINGS

System Configuration Menu Settings

COIN	1 COIN 1 CREDIT	1 COIN 2 CREDITS	1 COIN 3 CREDITS	1 COIN 4 CREDITS	1 COIN 5 CREDITS
	1 COIN 6 CREDITS	1 COIN 7 CREDITS	1 COIN 8 CREDITS	1 COIN 9 CREDITS	**2 COINS 1 CREDIT**
	3 COINS 1 CREDIT	4 COINS 1 CREDIT	5 COINS 1 CREDIT	6 COINS 1 CREDIT	7 COINS 1 CREDIT
	8 COINS 1 CREDIT	9 COINS 1 CREDIT	2 COINS START 1 COIN CONTINUE	FREE PLAY	
CONTINUE	**ON**		OFF		
MONITOR	FLIP		**NORMAL**		
DEMO SOUND	**ON**		OFF		
SOUND MODE	**STEREO (Q SOUND)**		MONAURAL		
CHUTE TYPE	**1 CHUTE SINGLE**				
	2 CHUTES SINGLE				
	2 CHUTES MULTI				

Proprietary and confidential information, not to be disclosed or copied without the express permission of CAPCOM® COIN-OP, INC.

Game Configuration Menu Settings

DIFFICULTY	**NORMAL**	HARD 1	HARD 2	HARD 3
	HARD 4	HARD 5	EXPERT	EASY
DAMAGE LEVEL	**NORMAL**	HIGH	MAXIMUM	LOW
TIMER SPEED	**NORMAL**	FAST	FASTEST	SLOW
GAME SPEED	**NORMAL**	TURBO 1	TURBO 2	FREE SELECT
MAX ROUND	**3 ROUNDS**	5 ROUNDS	1 ROUND	
EVENT	**OFF**	1 MATCH		
AUTOMATIC	**OFF**	FREE SELECT		

- Capcom recommended settings are in bold face.
- After you change the setting, make sure to select "EXIT" and push the Player 1 SHOT 1 button.
- Choose STEREO (QSOUND) if your cabinet is equipped with the Qsound Speaker System, otherwise select MONAURAL for proper sound effect.

Proprietary and confidential information, not to be disclosed or copied without the express permission of CAPCOM® COIN-OP, INC.

MENU ITEM DESCRIPTIONS

System Configuration Option Descriptions

COIN	Sets the charge per play
CONTINUE	Sets continuous play. **ON:** Continuous play is possible **OFF:** Continuous play is not possible
MONITOR FLIP	Flips the screen. If the screen appears upside down, change the setting. **FLIP:** Upside down **NORMAL:** Right side up
DEMO SOUND	Turns attract sound on or off.
SOUND MODE	STEREO or MONAURAL. **STEREO:** with QSOUND **MONAURAL:** without QSOUND QSOUND is available with CAPCOM QSOUND cabinets only. For other cabinet, please set to MONAURAL
CHUTE TYPE	Sets the number of player(s) and coin chutes. **1 CHUTE SINGLE** With this setting, either player can start the game. **2 CHUTES SINGLE** Two players use one coin chute and play at the same time. With this setting, the player whose coin was put in first starts the game. **2 CHUTES MULTI** Two players use two coin chutes and play separately. With this setting, the game is started from the same side the coin chute was used.
EXIT	To save the setting changes and return to the CONFIGURATION MENU, highlight this item and push the PLAYER 1 START button.

Proprietary and confidential information, not to be disclosed or copied without the express permission of CAPCOM® COIN-OP, INC.

Game Configuration Option Descriptions

DIFFICULTY	Sets the game difficulty level. There are eight levels of difficulty from EASY to EXPERT.
DAMAGE LEVEL	Sets the attack damage level. There are four levels of damage from LOW to MAXIMUM.
TIMER SPEED	Sets the speed of the countdown for the timer display. There are four speed levels from SLOW to FASTEST.
GAME SPEED	Sets the speed at which the characters fight.
MAX ROUND	Sets the number of rounds for winning. **1 ROUND:** Winner of a single round wins. **3 ROUNDS:** Winner of 2 out of 3 rounds wins. **5 ROUNDS:** Winner of 3 out of 5 rounds wins.
EVENT	Turns on event mode. Useful for Championship Tournaments. **OFF** Normal setting. Sets the mode to normal operation. **1 MATCH** Matches player with 1 credit. However, a win or a loss results in GAME OVER. CONTINUE is not available. **SUDDEN DEATH** The player that takes the initiative wins. One strike settles the fight. **1 MATCH & SUDDEN DEATH** Sets to 1 MATCH mode as well as SUDDEN DEATH mode.
AUTOMATIC	Allows for an automatic blocking feature for most characters (to be used for beginning players).
EXIT	Returns to the Configuration Menu.

Proprietary and confidential information, not to be disclosed or copied without the express permission of CAPCOM® COIN-OP, INC.

NOTES

Proprietary and confidential information, not to be disclosed or copied without the express permission of CAPCOM® COIN-OP, INC.

JAMMA Connections

SOLDER SIDE			COMPONENT SIDE
GND	A	1	GND
GND	B	2	GND
+5 VDC	C	3	+5 VDC
+5 VDC	D	4	+5 VDC
N.C	E	5	N/C
+12 VDC	F	6	+12 VDC
KEY	H	7	KEY
N/C	J	8	COIN COUNTER 1
COIN LOCK OUT 2	K	9	COIN LOCK OUT 1
*AUDIO OUT (-)	L	10	*AUDIO OUT (+)
N.C.	M	11	N/C
VIDEO GREEN	N	12	VIDEO RED
VIDEO SYNC	P	13	VIDEO BLUE
SERVICE (FREE CREDIT)	R	14	VIDEO GND
N/C	S	15	TEST MODE (DIAGNOSTICS)
2 PLAYER - COIN	T	16	1 PLAYER - COIN
2 PLAYER - START	U	17	1 PLAYER - START
2 PLAYER - UP	V	18	1 PLAYER - UP
2 PLAYER - DOWN	W	19	1 PLAYER - DOWN
2 PLAYER - LEFT	X	20	1 PLAYER - LEFT
2 PLAYER - RIGHT	Y	21	1 PLAYER - RIGHT
2 PLAYER - ATTACK 1	Z	22	1 PLAYER - ATTACK 1
2 PLAYER - ATTACK 2	a	23	1 PLAYER - ATTACK 2
2 PLAYER - BOOST	b	24	1 PLAYER - BOOST
N/C	c	25	N/C
N/C	d	26	N/C
GND	e	27	GND
GND	f	28	GND

* **NOTE** : REQUIRES AMPLIFICATION

Auxiliary Cable (P/N 03-0052) Connections

WIRE COLOR	CONNECTOR ODD ROW			CONNECTOR EVEN ROW	WIRE COLOR
	N/C	1	2	N/C	
	N/C	3	4	N/C	
	N/C	5	6	N/C	
	N/C	7	8	N/C	
PURPLE/YELLOW	N/C	9	10	N/C	
	N/C	11	12	N/C	
	N/C	13	14	N/C	
PINK	N/C	15	16	N/C	
RED	N/C	17	18	N/C	
BLUE	PLAYER 1 WEAPON	19	20	N/C	
GRAY/YELLOW	PLAYER 2 WEAPON	21	22	N/C	
PINK/YELLOW	N/C	23	24	N/C	
	N/C	25	26	N/C	
	N/C	27	28	N/C	
GRAY/YELLOW	TEST BRKT-VOLUME UP	29	30	TEST BRKT-VOLUME DOWN	PINK/YELLOW
BLACK/WHITE	TEST BRKT-VOLUME COMMON	31	32	N/C	
BLACK	PLAYER 2 WEAPON - COMMON	33	34	PLAYER 1 WEAPON- COMMON	BLACK

N/C NO CONNECTION

Proprietary and confidential information, not to be disclosed or copied without the express permission of CAPCOM® COIN-OP, INC.

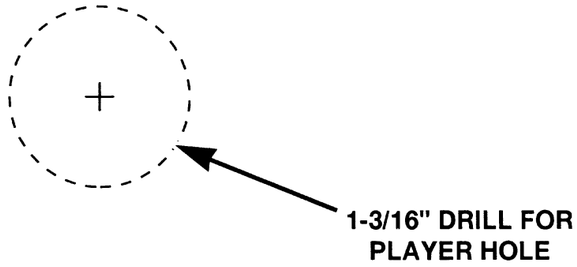

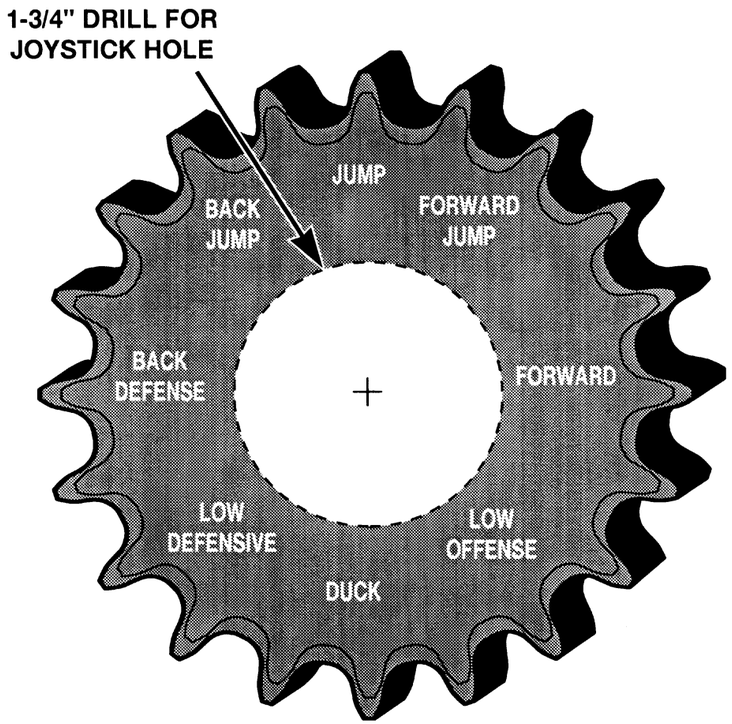

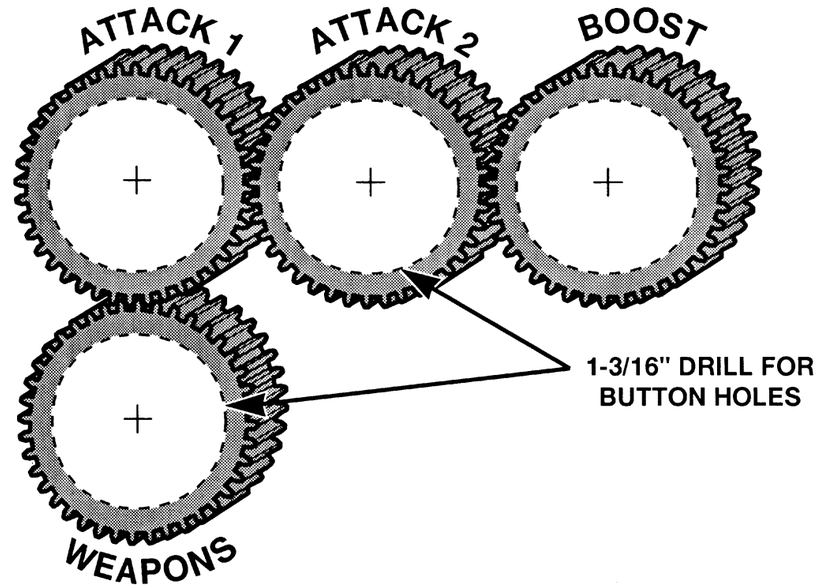

CAPCOM Inc.	CAPCOM , INC. 3311 NORTH KENNICOTT RD ARLINGTON HEIGHTS ILLINOIS 60004
DRILL HOLE TEMPLATE, CYBERBOTS	
V400100.	DRAWN BY: JA
DATE: 06/22/95	REVISION NO:

REFERENCE INFORMATION

GAME CASE CONTROLS

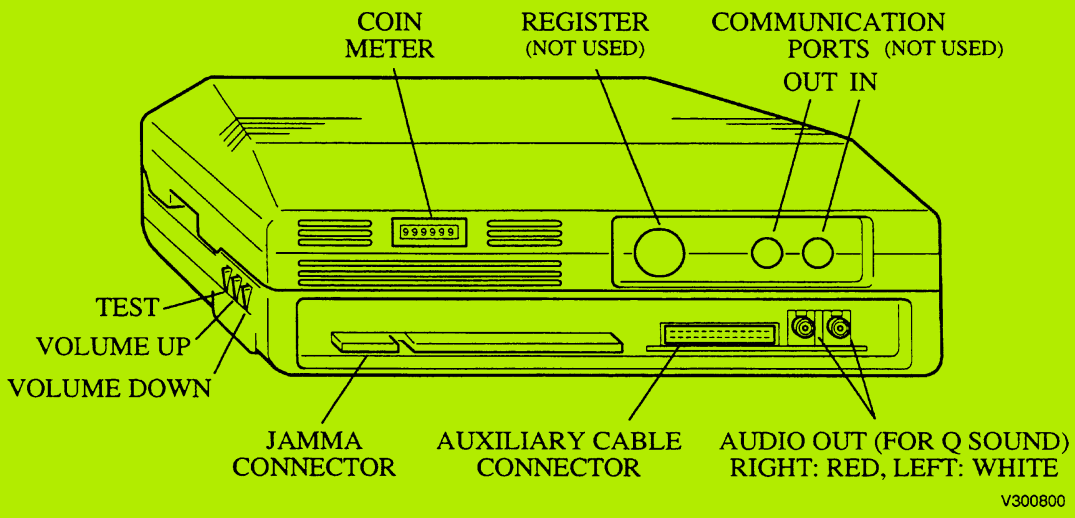

V300800

TYPICAL CONTROL PANEL LAYOUT OF *CYBERBOTS™: FULLMETAL MADNESS*

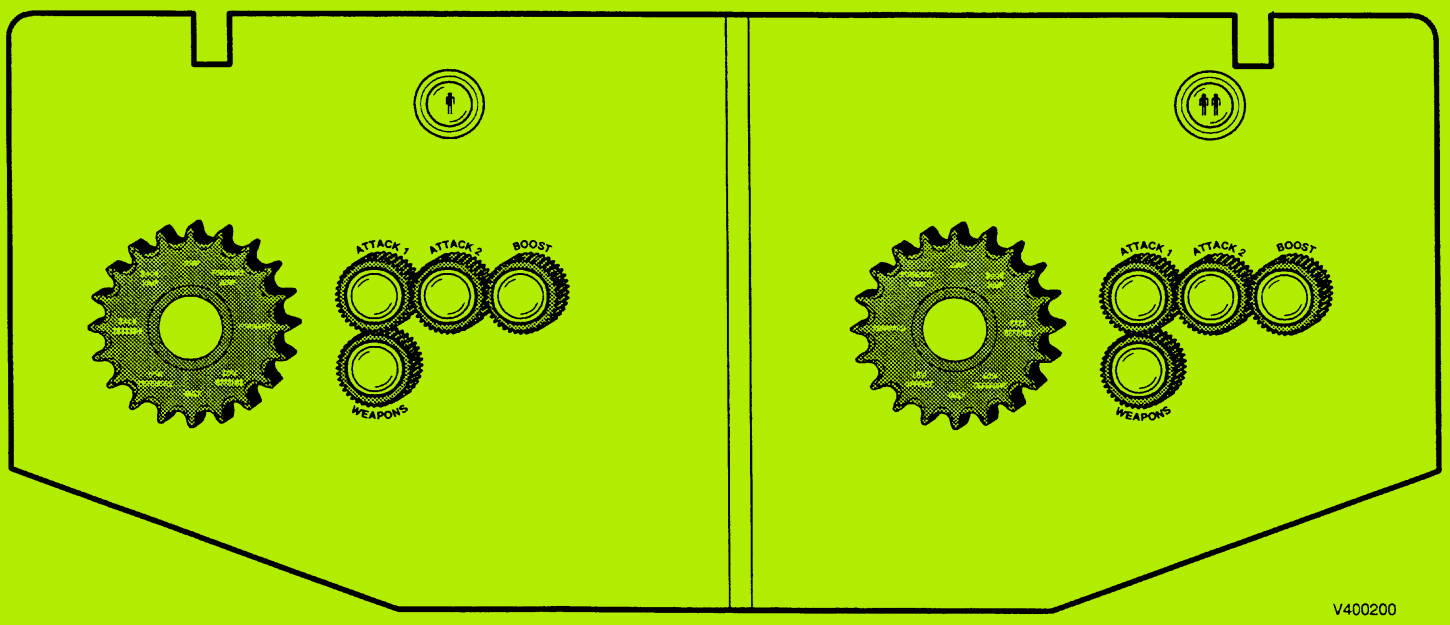

V400200

Proprietary and confidential information, not to be disclosed or copied without the express permission of CAPCOM® COIN-OP, INC.

NOTICE

This equipment has been tested and found to comply with the limits for a Class A digital device, pursuant to Part 15 of the FCC Rules. These limits are designed to provide reasonable protection against harmful interference when the equipment is operated in a commercial environment. This equipment generates, uses, and can radiate radio frequency energy and, if not installed and used in accordance with the instruction manual, may cause harmful interference to radio communications. Operation of this equipment in a residential area is likely to cause harmful interference, in which case the user will be required to correct the interference at his own expense.



WARNING

Federal law provides severe civil and criminal penalties for the unauthorized reproduction, distribution, or exhibition of copyrighted audiovisual works and video games.

The Federal Bureau of Investigation investigates allegations of criminal copyright infringement.

CAPCOM® COIN-OP, INC.
3311 N. Kennicott Road
Arlington Heights, Illinois 60004
Phone: (708) 797-6100
Fax: (708) 797-6306

Copyright © 1995 CAPCOM® COIN-OP, INC., All Rights Reserved