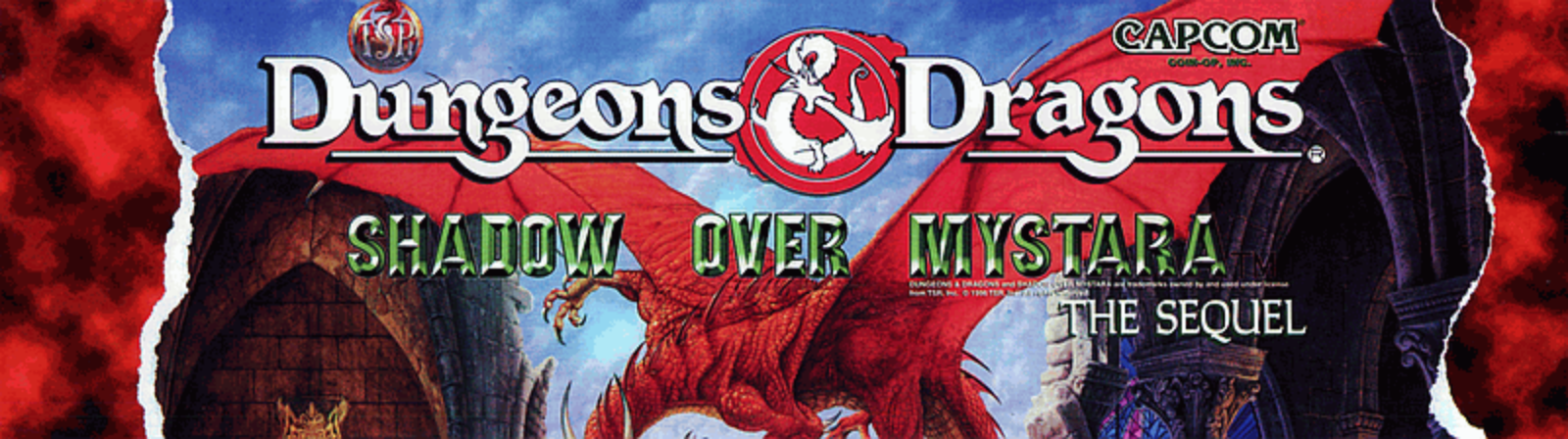
TSR
Dungeons & Dragons
CAPCOM
COIN-OP, INC.
SHADOW OVER MYSTARA
THE SEQUEL


Dungeons & Dragons
SHADOW OVER MYSTARA™
Play with your friends and experience the legend!
FIGHTER
Fights well at close quarters.
ELF
Wields both swords and spells.
CLERIC
Can heal wounded allies.
THIEF
Searches for traps and hidden rooms.
MAGIC USER
Attacks with magic from a distance.
DWARF
His small body lets him do well in any tight space.
Select from 6 different characters!
2players can select the same character!
MAGIC
You can cast assisting spells on your allies too!
Cure Critical Wounds
Recovers vitality
Striking
Enhances weapons
Bless
Increases power
Elf and Magic-user's combat spells are very powerful!
Meteor Sworm
Summons meteors
Wall of Fire
Creates a wall of fire
Reverse gravity
Turns gravity upside down
WEAPON CHANGE
Change your weapon according to the situation!
Dual Swords
Morning Star
Sword of Flame
ITEMS
Make good use of the various items!
Dagger
Oil
Ring of Lightning Bolts
CAPCOM
COIN-OP. INC.
SHADOW OVER MYSTARA, DUNGEONS & DRAGONS and the TSR Logo are trademarks of TSR, Inc. ©1996 TSR, Inc. All Rights Reserved. ©1996 CAPCOM COIN-OP, Inc. All Rights Reserved.
AW0099-01

# TECHNIQUES

**DASHING MOVE** → + A

※Not available for Magic-user

**ANTI-AIR MOVE** ↑ + A

※Not available for Magic-user

**SLIDING** ↓ + B

**MEGACRUSH** A + B

(※Will deplete life guage.)

※Not available for Magic-user



# Dungeons & Dragons

## SHADOW OVER MYSTARA™

## CONTROLS

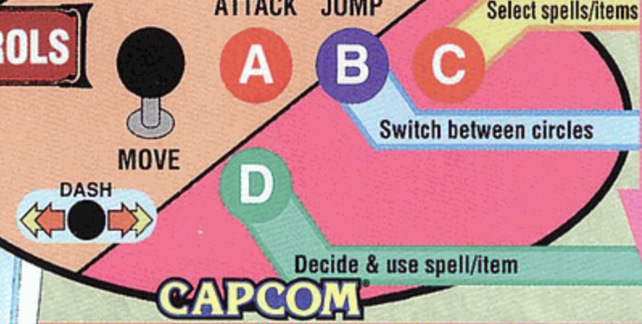


CAPCOM

COIN-OP. INC.

## SELECT SPELLS/ITEMS WITH THE COMMAND CIRCLE.

1. A B C Push C button to open the circle.
   D Push C button again to rotate the circle.
2. A B C Push B button to switch between circles.
   D (Magic-user, Elf, Cleric only)
3. A B C **Push D button to decide.** (Circle will close.)
   D Push D again to use selected spells/items.

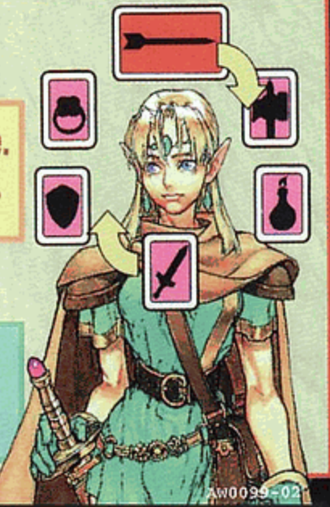

SHADOW OVER MYSTARA, DUNGEONS & DRAGONS and the TSR Logo are trademarks of TSR, Inc. ©1996 TSR, Inc. All Rights Reserved. ©1996 CAPCOM COIN-OP, Inc. All Rights Reserved.

AW0099-02

# Dungeons & Dragons®

# SHADOW OVER MYSTARA™

SHADOW OVER MYSTARA, DUNGEONS & DRAGONS
and the TSR LOGO are trademarks of TSR, Inc.
©1996 TSR, Inc. All Rights Reserved.
© CAPCOM CO., LTD. 1996 All Rights Reserved

## OPERATORS MANUAL



## WARNING

This game is for use in the United States of America and Canada. Sales, export or operation outside of these countries may be constructed as copyright and trademark infringements and is strictly prohibited. Violators are subject to severe penalties and will be prosecuted to the full extent of the law.

CAPCOM® COIN-OP, INC.
3311 N. Kennicott Avenue
Arlington Heights, Illinois 60004
Phone: (847) 797-6100
Fax: (847) 797-6306

PM00149-KIT
031196

**THANK YOU FOR PURCHASING *DUNGEONS & DRAGONS: SHADOW OVER MYSTARA™* VIDEO KIT. WE INVITE YOU TO USE THE FOLLOWING MAILING ADDRESS, TELEPHONE OR FAX NUMBER FOR PARTS OR SERVICE INFORMATION CONCERNING THIS GAME:**

**CAPCOM® COIN-OP, INC.**
**ATTN: FIELD SERVICE - VIDEO PRODUCTS**
**3311 N. KENNICOTT AVENUE**
**ARLINGTON HEIGHTS, ILLINOIS 60004**
**PHONE: (708) 797-6100**
**FAX: (708) 797-6306**

**THE SERIAL NUMBERS OF YOUR KIT ARE LOCATED ON THE GAME CARTRIDGES AS SHOWN BELOW. PLEASE HAVE THESE SERIAL NUMBERS AVAILABLE WHEN CONTACTING US FOR SERVICE INFORMATION.**

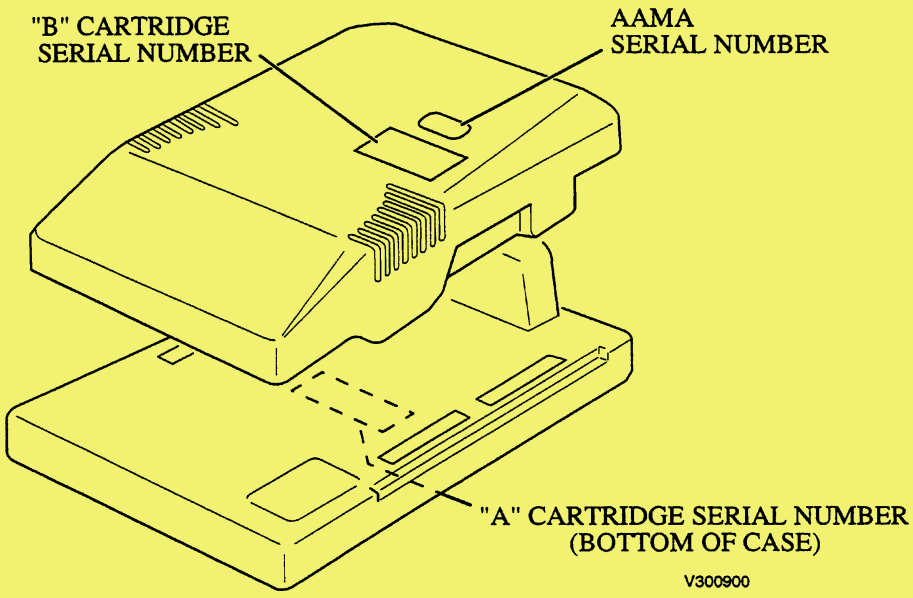


**DEPENDING ON THE TYPE OF KIT YOU PURCHASED, PLEASE RECORD THE SERIAL NUMBERS HERE:**

**"FULL" KIT**
**A-CARTRIDGE SERIAL # _____**
**B-CARTRIDGE SERIAL # _____**
**AAMA SERIAL # _____**

**"B" KIT**
**B-CARTRIDGE SERIAL # _____**
**AAMA SERIAL # _____**

Proprietary and confidential information, not to be disclosed or copied without the express permission of CAPCOM® COIN-OP, INC.

# TABLE OF CONTENTS

*Warranty Information* ..... ii

*Kit Inspection* ..... 1

*Kit Installation*
- "FULL" Kit
  - Preparation ..... 3
  - Installation ..... 3
    - Marquee ..... 3
    - System Wiring: 2-Player ..... 5
    - System Wiring: 3/4-Player ..... 6
    - Test Bracket ..... 7
    - Game Cartridges ..... 7
- "B" Kit
  - Preparation and Installation ..... 8
- "Linked" Configurations
  - Installation Notes ..... 8

*Test Mode*
- Test Menu ..... 9
  - Accessing the Menu ..... 9
  - How to Select an Item ..... 9
  - Closing the Menu ..... 9
  - Menu Item Descriptions ..... 10
- Configuration Menu ..... 11
  - System Configuration ..... 12
  - Game Configuration ..... 13

*Cable Wiring*
- JAMMA Connections ..... 14
- Auxiliary Cable Connections ..... 14

*Template : Control Panel Drill Hole(s)*

Proprietary and confidential information, not to be disclosed or copied without the express permission of CAPCOM® COIN-OP, INC.

# LIMITED PRODUCT WARRANTY
# (APPLIES TO DOMESTIC SALES ONLY)

CAPCOM® COIN-OP, INC. (Seller), warrants only to the initial purchaser of its products, that the items listed below are free from defects in material and workmanship under normal use and service for the warranty periods specified:

| | |
|---|---|
| A. CPS II System Cartridges | One (1) Year |
| B. Electronic and Mechanical Components: | (90) days |

No other part of Seller's products are warranted.

Warranty periods are effective from the initial date of shipment from seller to its authorized distributors.

Seller's sole liability shall be, at its option, to repair or replace products which are returned to Seller during the warranty periods specified, provided:

A. Seller is notified promptly upon discovery by buyer that stated products are defective;

B. Such products are properly packaged and then returned, prepaid to Seller's designated.plant.

This warranty does not apply to any parts damaged during shipment or handling, or due to improper installation or usage, or alteration. In no event shall Seller be liable for any anticipated profits, loss of profits, loss of use, incidental or consequential damages or any other losses incurred by the customer in connection with the purchase of a CAPCOM® COIN-OP, INC. product.

## WARRANTY DISCLAIMER

EXCEPT AS SPECIFICALLY PROVIDED IN A WRITTEN CONTRACT BETWEEN SELLER AND PURCHASER, THERE ARE NO OTHER WARRANTIES, EXPRESSED OR IMPLIED, INCLUDING ANY IMPLIED WARRANTIES OF MERCHANTABILITY OR FITNESS FOR A PARTICULAR PURPOSE.

## IMPORTANT NOTICE

THIS SHIPMENT HAS BEEN CAREFULLY INSPECTED AND PROPERLY PACKAGED BEFORE LEAVING THE FACTORY. WE CANNOT ASSUME RESPONSIBILITY FOR BREAKAGE THAT MAY OCCUR DURING TRANSPORTATION OF THE GAME. IF THIS GAME IS DAMAGED UPON RECEIPT FROM THE CARRIER, IMMEDIATELY NOTIFY THE CARRIER AND FILE A DAMAGE REPORT.


Proprietary and confidential information, not to be disclosed or copied without the express permission of CAPCOM® COIN-OP, INC.

# KIT INSPECTION

There are two kits available for conversion to ***DUNGEONS & DRAGONS : SHADOW OVER MYSTARA™*** :

1) **DDT1000** ("FULL" kit) contains the complete game cartridges, all necessary graphics, and replacement joysticks and button switches. The "FULL" kit is intended for conversion of most JAMMA-compatible, 2-player, horizontal screen cabinets. Additional parts for 3-player and 4-player configurations are available through your local CAPCOM® distributor.

2) **DDT1000B** ("B" kit) contains the game software cartridge (B-cartridge) and must be installed to a current CAPCOM® System II game ("A" cartridge). It includes all the necessary game graphics for a cabinet conversion (marquee, control panel overlay, monitor card, etc.).

Check that all parts have been shipped with your kit. If any parts are missing, contact your distributor immediately.

## KIT PARTS LIST

| DDT1000 | DDT1000B | PART NO. | DESCRIPTION | QTY |
|---|---|---|---|---|
| √ | | A-00643 | CPS II System Cartridges (A/B ) | 1 |
| | √ | A-00644 | CPS II System Cartridge ( B ) | 1 |
| √ | √ | GE1200 | Monitor Card | 1 |
| √ | √ | AW00198 | Marquee | 1 |
| √ | √ | AW00145 | Overlay, Control Panel | 1 |
| √ | √ | AW0099 | Decal, Joystick & Button Switches | 1 |
| √ | √ | AW00147 | Decal, Cabinet Side | 2 |
| √ | √ | AW00198-01 | Decal - Top, Game Play Instruction | 1 |
| √ | √ | AW00198-02 | Decal - Bottom, Game Play Instruction | 1 |
| √ | √ | PM00149-KIT | Manual, Operators | 1 |
| √ | | 03-0066 | Cable, Auxiliary | 1 |
| √ | | GE2030 | Joystick | 2 |
| √ | | 16-0130 | Switch, 1-Player Start Button (White) | 1 |
| √ | | 16-0131 | Switch, 2-Player Start Button (White) | 1 |
| √ | | 16-0133 | Switch, Button (Red) | 2 |
| √ | | 16-0134 | Switch, Button (Blue) | 2 |
| √ | | 16-0147 | Switch, Button (Yellow) | 2 |
| √ | | 16-0136 | Switch, Button (Green) | 2 |
| √ | | 03-0050 | Bracket, Volume/Test | 1 |
| √ | | 13-0066 | Bracket, A-Cartridge Mounting | 4 |
| √ | | SC00104-05 | Screw, Wood | 4 |
| | √ | 13-0141 | Clamp, Case | 2 |

Proprietary and confidential information, not to be disclosed or copied without the express permission of CAPCOM® COIN-OP, INC.

# CAUTION

Please read the following instructions to keep the PC board in good condition:

- ♦Do not block the ventilation slots.
- ♦Do not drop or bump the board.
- ♦Do not spill any liquids on the case.
- ♦Do not disassemble the case.

**ATTENTION**

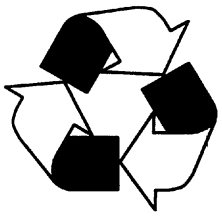

**The product that you have purchased contains a recyclable battery. At the end of its useful life, under various state and local laws, it may be illegal to dispose of this battery into the municipal waste system. Check with your local solid waste official for details in your area for recycling options or proper disposal.**

**DISASSEMBLING THE CASE OR REMOVING THE STICKER MAY CAUSE THE TERMINATION OF YOUR REPAIR WARRANTY.**



Proprietary and confidential information, not to be disclosed or copied without the express permission of CAPCOM® COIN-OP, INC.

# "FULL" KIT INSTALLATION

**WARNING:**

**MAKE SURE ELECTRICAL POWER TO THE GAME IS OFF BEFORE STARTING THE KIT INSTALLATION.**

## PREPARATION

1. Disconnect and remove the old printed circuit board(s) from the cabinet.

2. Remove or open the control panel, and disconnect and remove the buttons and joystick(s) from the control panel.

3. Remove any covering from the control panel overlay, and then remove the control panel overlay.

4. Place the Drill Hole template (included in this manual) over the control panel to determine where any new holes should be placed. Center punch any needed new holes on the control panel.

5. Cut out the new holes using a 1-3/16" hole saw.

6. If there is an additional control panel cover (such as plastic or lexan) that will be utilized, cut any additional holes using the same template.

7. Plug-up any unused holes with wood dowel (1-1/8" diameter) and sand any rough edges.

## INSTALLATION

### Marquee Installation

8. Remove the marquee glass, old marquee overlay, and the old cabinet graphics.

9. Install the new marquee and replace the glass.

### Control Panel Overlay Installation (See Figure 1)

10. The control panel overlay in the kit is oversized to accommodate most control panel sizes. Center the overlay on the control panel, leaving some excess material at the edges.

11. Remove the protective backing from the overlay and press it down on the control panel, keeping it properly aligned. Press it down firmly, smooth out any bubbles, and press it over the edges.

12. Trim any excess from the overlay. Place the drill hole template on top of the overlay, aligning it with the joystick holes. Pierce through the overlay at each control panel hole. Then, cut away overlay material covering the joystick and button holes. Remove the template and clean off the overlay.

13. Peel off the backings of the 6-button and joystick decals, align over the control panel holes, and press in place on the overlay (refer to the drill hole template for proper placement). Using a knife, trim material from the center hole of the joystick decal.

14. Install the control panel cover (if required).

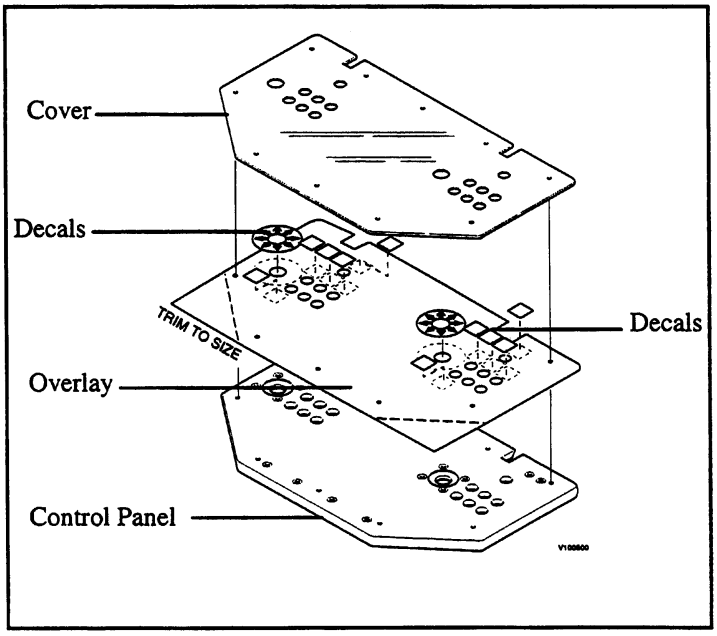


**Figure 1**
**Overlay Installation**

### Reassembly of Components

15. Install all buttons and retaining rings on the control panel as shown in Figure 2.

Proprietary and confidential information, not to be disclosed or copied without the express permission of CAPCOM® COIN-OP, INC.

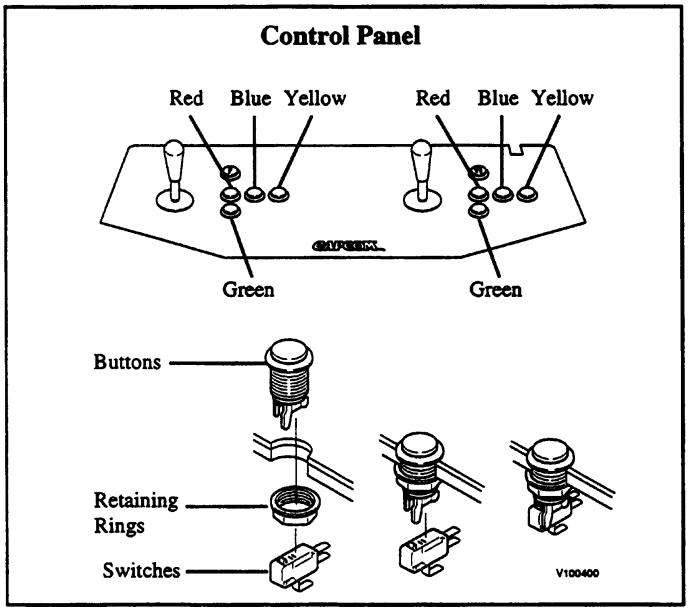


**FIGURE 2**
**Control Panel Buttons and Switches**

16. Notice that there are two white buttons. (See Figure 3.) Install the PLAYER ONE button on the top left-hand side of the control panel, and the PLAYER TWO button on the top right-side of the control panel. The WHITE buttons are START buttons.

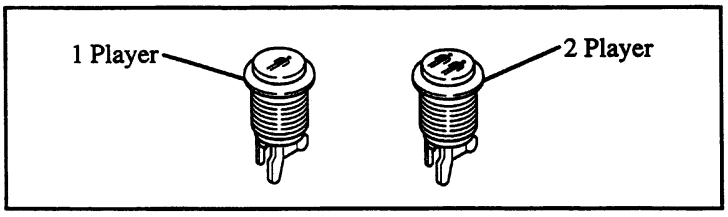


**FIGURE 3**
**Function and Start Buttons**

17. Install the switched on the buttons as shown in Figure 2. Orient the switches so that when a button is pressed, the red contact on the switch is depressed.

18. Install the joysticks on the control panel as shown in Figure 4.

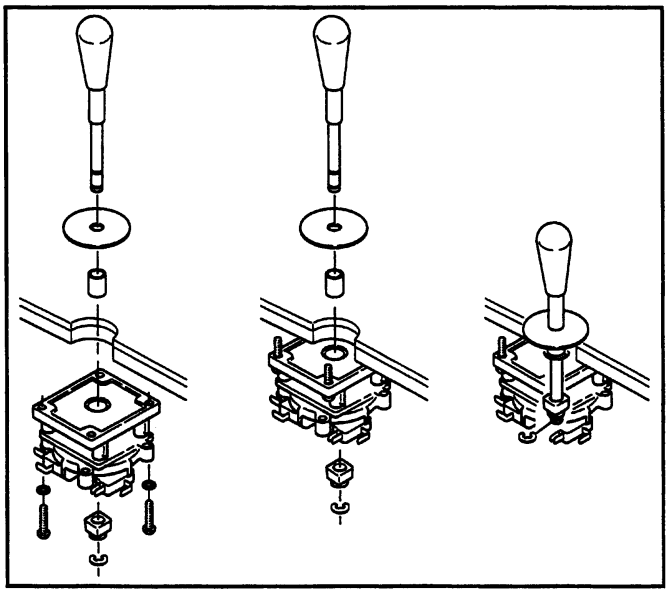

**FIGURE 4**
**Joystick Installation**

## CABINET DECAL INSTALLATION

19. Remove monitor glass and install monitor card.

20. Peel-off the backing to the instruction decals and place on both the top and the bottom sides of the monitor card. (See Figure 5). Also, apply the cabinet decals to both sides of the cabinet.

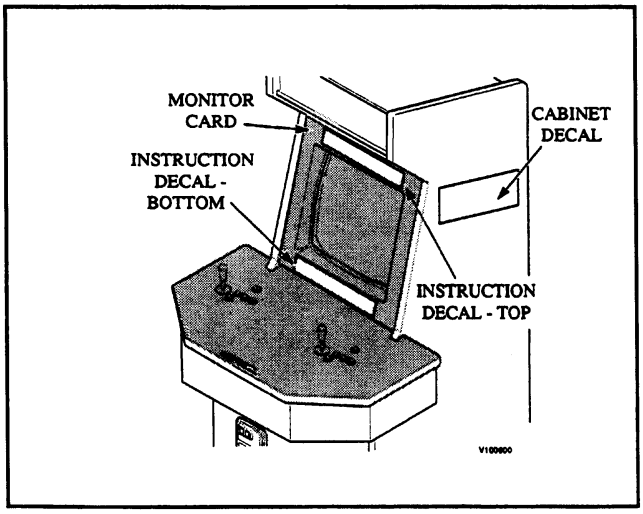


**FIGURE 5**
**Cabinet Decal Installation**


Proprietary and confidential information, not to be disclosed or copied without the express permission of CAPCOM® COIN-OP, INC.

## System Wiring

**NOTE:**
All switch wires used in this game must be wired to the normally-open connection on the switches. Each switch requires a ground wire on the common connector and the appropriate control or switch wire on the normally-open connector of the switch.

21. Reconnect the existing JAMMA connectors to the control panel according to Table 1.

| JAMMA CONNECTOR REF. | *WIRE COLOR | CONNECTS TO | COMPONENT | FUNCTION |
|---|---|---|---|---|
| 18 | WHITE/BLACK | PLAYER 1 | JOYSTICK | UP |
| 19 | WHITE/BROWN | PLAYER 1 | JOYSTICK | DOWN |
| 20 | WHITE/RED | PLAYER 1 | JOYSTICK | LEFT |
| 21 | WHITE/ORANGE | PLAYER 1 | JOYSTICK | RIGHT |
| 22 | WHITE/YELLOW | PLAYER 1 | BUTTON SWITCH | "ATTACK" |
| 23 | WHITE/GREEN | PLAYER 1 | BUTTON SWITCH | "JUMP" |
| 24 | WHITE/BLUE | PLAYER 1 | BUTTON SWITCH | "MAGIC" |
| 25 | WHITE//GRAY | PLAYER 1 | BUTTON SWITCH | "SELECT" |
| | | | | |
| V | VIOLET/BLACK | PLAYER 2 | JOYSTICK | UP |
| W | VIOLET/BROWN | PLAYER 2 | JOYSTICK | DOWN |
| X | VIOLET/RED | PLAYER 2 | JOYSTICK | LEFT |
| Y | VIOLET/ORANGE | PLAYER 2 | JOYSTICK | RIGHT |
| Z | VIOLET/YELLOW | PLAYER 2 | BUTTON SWITCH | "ATTACK" |
| a | VIOLET/GREEN | PLAYER 2 | BUTTON SWITCH | "JUMP" |
| b | VIOLET/BLUE | PLAYER 2 | BUTTON SWITCH | "MAGIC" |
| c | VOLET/GRAY | PLAYER 2 | BUTTON SWITCH | "SELECT" |

**Table 1: JAMMA Wiring Connections**

*** Wire Color Note:** Wire colors shown are according to the AAMA -AMOA Standard for wire color assignments; your harness may contain different colors than shown above.

21a. If you are converting a 3 or 4 player cabinet, you must also use the supplied 34-pin auxiliary harness (see Figure 6). To connect the additional button switches, use the wiring information in Table 2 (3-player) or Table 3 (4-player).

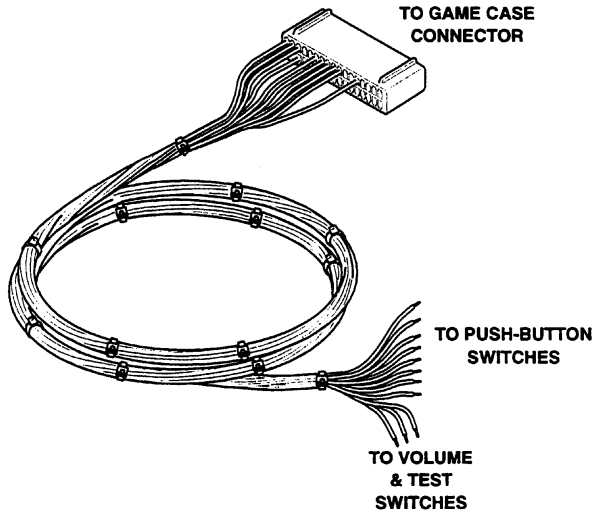


Figure 6: Auxiliary Cable Harness

Proprietary and confidential information, not to be disclosed or copied without the express permission of CAPCOM® COIN-OP, INC.

| WIRE COLOR | CONNECTOR ODD ROW | | | CONNECTOR EVEN ROW | WIRE COLOR |
|---|---|---|---|---|---|
| BLACK | GND | 1 | 2 | GND | BLACK |
| | N/C | 3 | 4 | N/C | |
| YELLOW | +12VDC | 5 | 6 | +12VDC | YELLOW |
| PURPLE/WHITE | LOCK OUT 3 | 7 | 8 | | DK.BLUE/WHITE |
| PURPLE/YELLOW | COIN 3 | 9 | 10 | | BLUE/YELLOW |
| WHITE | 3 PLAYER - START | 11 | 12 | | BLACK/WHITE |
| GRAY | 3 PLAYER - JOYSTICK UP | 13 | 14 | | GRAY/WHITE |
| PINK | 3 PLAYER - JOYSTICK DOWN | 15 | 16 | | PINK/WHITE |
| RED | 3 PLAYER - JOYSTICK LEFT | 17 | 18 | | RED/WHITE |
| BLUE | 3 PLAYER - JOYSTICK RIGHT | 19 | 20 | | LT.BLUE/WHITE |
| GRAY/YELLOW | 3 PLAYER - "ATTACK" BUTTON | 21 | 22 | | GRAY/WHITE |
| PINK/YELLOW | 3 PLAYER - "JUMP" BUTTON | 23 | 24 | | PINK/WHITE |
| RED | 3 PLAYER - "MAGIC" BUTTON | 25 | 26 | | RED/WHITE |
| LT. BLUE | 3 PLAYER - "SELECT" BUTTON | 27 | 28 | | LT. BLUE/WHITE |
| GRAY/YELLOW | TEST BRKT-VOLUME UP | 29 | 30 | TEST BRKT-VOLUME DOWN | PINK/YELLOW |
| BLACK/WHITE | TEST BRKT-VOLUME GND | 31 | 32 | N/C | |
| BLACK | N/C | 33 | 34 | N/C | BLACK |

**Table 2**
**Auxiliary Cable Connections: 3-Player**

| WIRE COLOR | CONNECTOR ODD ROW | | | CONNECTOR EVEN ROW | WIRE COLOR |
|---|---|---|---|---|---|
| BLACK | GND | 1 | 2 | GND | BLACK |
| | N/C | 3 | 4 | N/C | |
| YELLOW | +12VDC | 5 | 6 | +12VDC | YELLOW |
| PURPLE/WHITE | LOCK OUT 3 | 7 | 8 | LOCK OUT 4 | DK.BLUE/WHITE |
| PURPLE/YELLOW | COIN 3 | 9 | 10 | COIN 4 | BLUE/YELLOW |
| WHITE | 3 PLAYER - START | 11 | 12 | 4 PLAYER - START | BLACK/WHITE |
| GRAY | 3 PLAYER - JOYSTICK UP | 13 | 14 | 4 PLAYER - JOYSTICK UP | GRAY/WHITE |
| PINK | 3 PLAYER - JOYSTICK DOWN | 15 | 16 | 4 PLAYER - JOYSTICK DOWN | PINK/WHITE |
| RED | 3 PLAYER - JOYSTICK LEFT | 17 | 18 | 4 PLAYER - JOYSTICK LEFT | RED/WHITE |
| BLUE | 3 PLAYER - JOYSTICK RIGHT | 19 | 20 | 4 PLAYER - JOYSTICK RIGHT | LT.BLUE/WHITE |
| GRAY/YELLOW | 3 PLAYER - "ATTACK" BUTTON | 21 | 22 | 4 PLAYER - "ATTACK" BUTTON | GRAY/WHITE |
| PINK/YELLOW | 3 PLAYER - "JUMP" BUTTON | 23 | 24 | 4 PLAYER - "JUMP" BUTTON | PINK/WHITE |
| RED | 3 PLAYER - "MAGIC" BUTTON | 25 | 26 | 4 PLAYER - "MAGIC" BUTTON | RED/WHITE |
| LT. BLUE | 3 PLAYER - "SELECT" BUTTON | 27 | 28 | 4 PLAYER - "SELECT" BUTTON | LT. BLUE/WHITE |
| GRAY/YELLOW | TEST BRKT-VOLUME UP | 29 | 30 | TEST BRKT-VOLUME DOWN | PINK/YELLOW |
| BLACK/WHITE | TEST BRKT-VOLUME GND | 31 | 32 | N/C | |
| BLACK | N/C | 33 | 34 | N/C | BLACK |

**Table 3**
**Auxiliary Cable Connections: 4 Player**


Proprietary and confidential information, not to be disclosed or copied without the express permission of CAPCOM® COIN-OP, INC.

22. An optional Test/Volume bracket (see Figure 7) is included in the kit. Your cabinet may already contain this bracket. If you need to install the bracket, it should be located inside the coin door and on top of the cash box for easy access.

NOTE: The test bracket contains the same Test and Volume functions found on the CPS II A-cartridge.

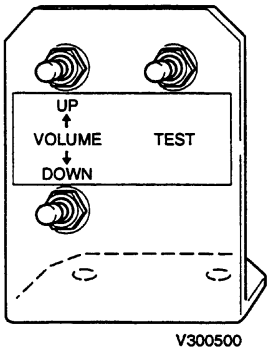


Figure 9: Test Bracket

Wiring of the Test Bracket requires connections to both the main JAMMA harness as well as the auxiliary cable harness (refer to Table 4).

| LEAD WIRE COLOR | SWITCH FUNCTION | CONNECTS TO |
|---|---|---|
| YELLOW | VOLUME-UP | AUX. CABLE '29'(GRAY/ YELLOW) |
| GREEN | COMMON | AUX. CABLE '31'(BLACK/ WHITE) |
| BLACK | VOLUME-DOWN | AUX. CABLE '30'(PINK/ YELLOW) |
| GREEN | COMMON | AUX. CABLE '31'(BLACK/ WHITE) |
| BROWN | TEST | JAMMA '15' |
| BLACK | GROUND | JAMMA 'A' or 'B' or 'e' or 'f' or '1' or '2' or '27' or '28' |

Table 4
Test Bracket Wiring Chart

## GAME CARTRIDGE INSTALLATION

23. Install the four (4) mounting brackets to the underside of the "A" cartridge as shown in Figure 8.

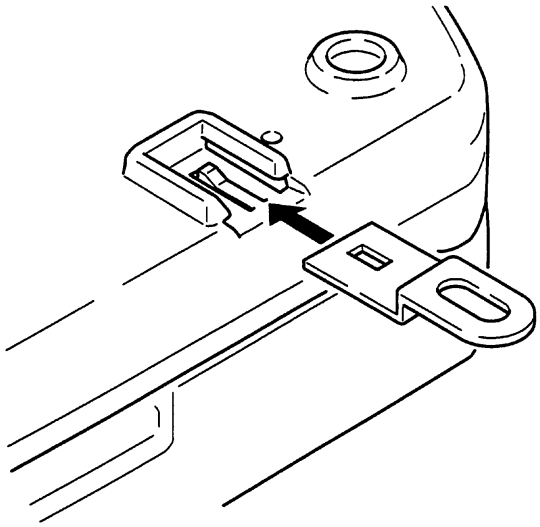

Figure 8: Mounting Bracket Installation

24. Using the supplied wood screws, fasten the game cartridge case to the control panel shelf, as shown in Figure 9.

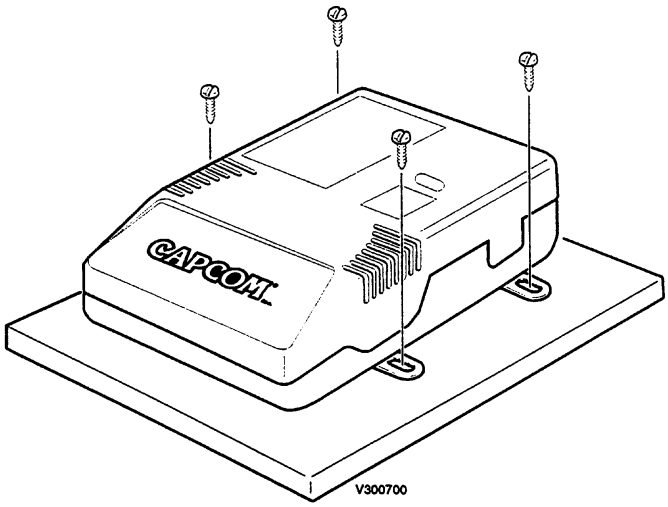


Figure 9: Case Mounting

25. Connect the JAMMA harness connector and the auxiliary cable connector to the "A' cartridge. If your cabinet is equipped with Q-SOUND, also attach the audio cables.

Proprietary and confidential information, not to be disclosed or copied without the express permission of CAPCOM® COIN-OP, INC.

**WARNING**

**Improper installation of the JAMMA harness connector to the game cartridge will cause damage to the enclosed PCB.**

26. Power-up the game and set all operator adjustable options by pressing the **TEST** switch on either the Test/Volume bracket or the A-cartridge case. Follow the instructions under the ***TEST MENU*** section of this manual.

## "B" KIT INSTALLATION

1. To install the kit parts, you must follow the "FULL" Kit Preparation and Installation Procedure, steps 3 through 22.

2. To remove the existing "A" cartridge from the "B" cartridge, pull the old case clamps apart and discard (see Figure 10). Carefully remove the old "B" cartridge and install the new "B' cartridge. Install the new case clamps.

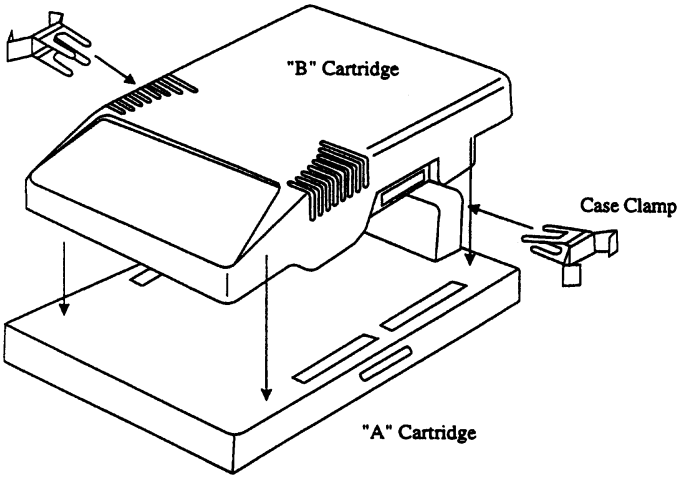


Figure 10: Case Clamp Removal/Installation

**WARNING**

**FURTHER DISASSEMBLY OF EITHER GAME CARTRIDGE WILL VOID YOUR WARRANTY.**

3. Power-up the game and set all operator adjustable options by pressing the **TEST** switch. Follow the instructions under the ***TEST MENU*** section of this manual

## 2-CABINET "LINKED" INSTALLATIONS

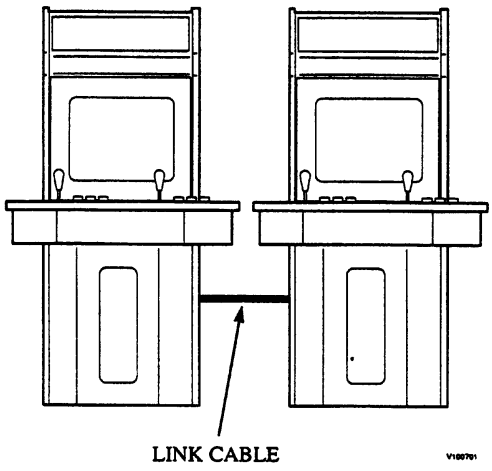


A 2-cabinet "linked" installation requires the use of a link cable plus additional control panel parts and cabinet graphics. Contact your local distributor for details on fabricating a link cable (wiring diagram, materials list, etc.) and parts requirements for the additional second cabinet.


Proprietary and confidential information, not to be disclosed or copied without the express permission of CAPCOM® COIN-OP, INC.

# TEST MENU

The test menu allows you to test the functions and configure the game. These items include input devices such as joysticks, buttons and coin mechs, output devices such as monitor, speakers and meters. Through the Test Menu you can also access the Configuration Menu, where you can change the settings of the game.

## 1. ACCESSING THE TEST MENU

- **For a CAPCOM® cabinet, or a cabinet with a test switch:**
  Make sure the game is on and push the test switch. The screen shown below will appear.

- **For a cabinet without a test switch:**
  Push the test switch test on the outside of the blue plastic casing. (Refer to the inside back cover of the manual).

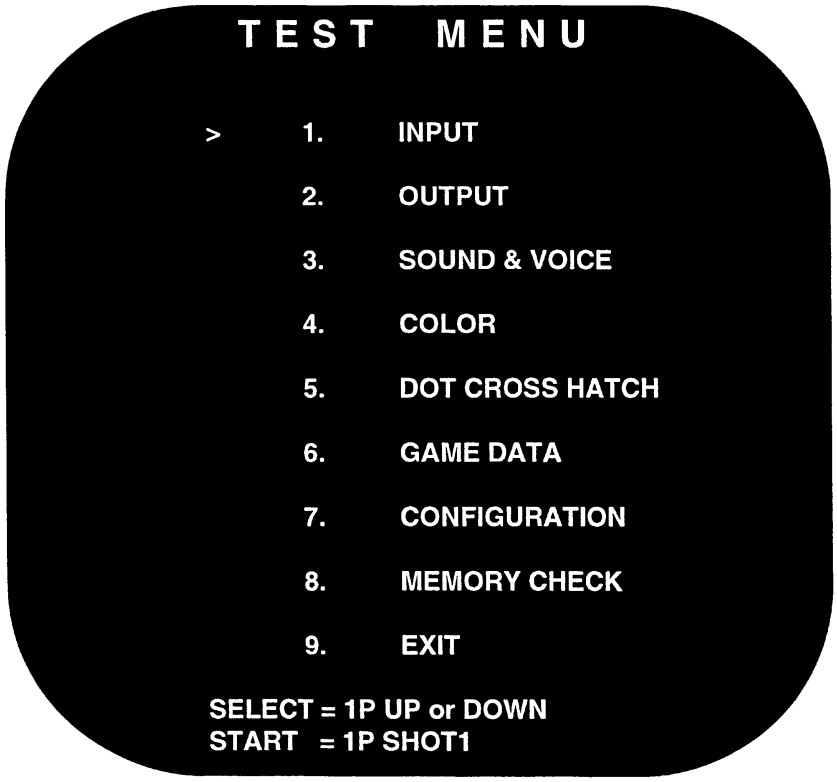


## 2. HOW TO SELECT AN ITEM

- Use the *PLAYER 1 JOYSTICK* to move the arrow in front of the desired item and press the *PLAYER 1 ATTACK* button.
- To return to the test menu, push the *PLAYER 1 START* and *PLAYER 2 START* buttons simultaneously.
- The test menu will always appear on the screen:
  a) After you exit the **"7. CONFIGURATION MENU"**and
  b) After the memory is tested from the menu, **"8. MEMORY CHECK"**.

Proprietary and confidential information, not to be disclosed or copied without the express permission of CAPCOM® COIN-OP, INC.

## 3. CLOSING THE TEST MENU

To close the Test Menu, highlight **"9. EXIT"** and push the *PLAYER 1 ATTACK* button.

## 4. TEST MENU ITEM DESCRIPTIONS

| | |
|---|---|
| **INPUT** | Used to test all the input switches, such as joysticks and buttons. The "0" changes to a "1" as the button is pushed or joystick is moved. Check connections and switches in case the "0" doesn't change to a "1" when depressed or moved. |
| **OUTPUT** | Used to test the coin meter and the coin lock. |
| **SOUND & VOICE** | Select a code of **SOUND** or **VOICE** with the *PLAYER 1 JOYSTICK.* Push the *PLAYER 1 ATTACK* button to hear the sound of the selected code. |
| **COLOR** | Shows color bars of red, green, blue, and white. Adjust **RGB** and brightness to obtain the optimum color balance and solid black background. |
| **DOT CROSS HATCH** | Used to test the screen size, focus and distortion. |
| **GAME DATA** | Coin meter and playtime information will be displayed. |
| **CONFIGURATION** | Used to change the game play settings. Refer to the **CONFIGURATION MENU** section. |
| **MEMORY CHECK** | Used to test memory.<br>**"OK"** appears when each block of memory passes test, **"NG"** appears in case of malfunction. If **"NG"** appears, repeat the memory test and wait for the **"OK"** message. Contact your distributor if **"NG"** still appears. |
| **EXIT** | Select this item and push the ***PLAYER 1 ATTACK*** button to return to game play mode. |



Proprietary and confidential information, not to be disclosed or copied without the express permission of CAPCOM® COIN-OP, INC.

# CONFIGURATION MENU

The Configuration Menu is used to change various game settings such as level difficulty, credits, sound configuration, etc. These settings are stored in memory on the PCB rather than DIP switches.

The Configuration Menu is divided into 2 sections. In the **SYSTEM** section, you can change credits, sound, and coin door configurations. In the **GAME** section, you can change the play difficulty level and duration of the game.

## 1. ACCESSING THE CONFIGURATION MENU

- From the TEST MENU, move the arrow to **"7. CONFIGURATION"** and push the *PLAYER 1 ATTACK* button. The screen below will be displayed. A description of each option is explained in the table below.

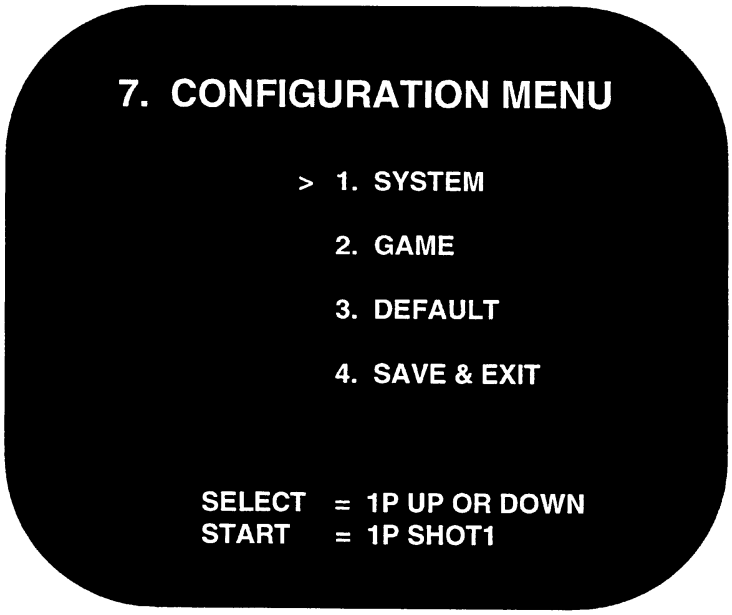


| | |
|---|---|
| **SYSTEM** | Select this item to change settings for credits, monitor flip, sound and coin door configurations. |
| **GAME** | Select this item to change difficulty level, damage level, time count speed, maximum number of rounds and event type. |
| **DEFAULT** | Use this item to restore configuration settings to the original factory values. Press the *PLAYER 1 ATTACK* and *PLAYER 1 JUMP* buttons at the same time to select this option. |
| **SAVE & EXIT** | Use this to save new configuration settings and exit to the Test Menu. The message "SAVING NEW CONFIGURATION IN EEPROM" will appear while the new settings are being saved. **DO NOT** turn power off to the game until "SAVING" is complete and the Test Menu reappears. |

Proprietary and confidential information, not to be disclosed or copied without the express permission of CAPCOM® COIN-OP, INC.

# SYSTEM CONFIGURATION

### CHANGING THE SYSTEM CONFIGURATION SETTINGS

Move the *PLAYER 1 JOYSTICK* up or down to highlight the desired option. Once the option is highlighted, move the *PLAYER 1 JOYSTICK* left or right or press the *PLAYER 1 ATTACK* button to select.

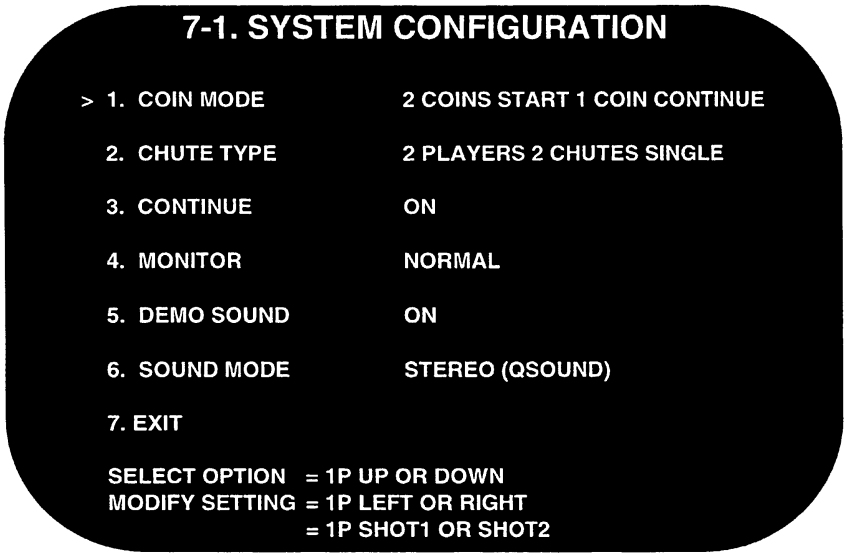


### SYSTEM CONFIGURATION ITEM DESCRIPTIONS

| | |
|---|---|
| 1. COIN MODE | SELECT THE CHARGE PER PLAY. |
| 2. CHUTE TYPE | SELECT THE NUMBER OF PLAYER(S) AND COIN CHUTE TYPE. |
| 3. CONTINUE | SELECT **ON** FOR CONTINUOUS PLAY OR **OFF** FOR NON-CONTINUOUS PLAY. |
| 4. MONITOR | FLIPS THE POSITION OF THE SCREEN. IF THE SCREEN APPEARS UPSIDE-DOWN, CHANGE THE SETTING TO **FLIP**; IF THE SCREEN APPEARS CORRECT, SELECT **NORMAL**. |
| 5. DEMO SOUND | TURNS ATTRACT SOUNDS ON OR OFF. |
| 6. SOUND MODE | SELECT **STEREO** OR **MONAURAL** FOR USE WITH YOUR CABINET.<br>NOTE: **STEREO** SHOULD ONLY BE SELECTED FOR USE WITH CAPCOM® QSOUND CABINETS. |
| 7. EXIT | TO SAVE THE SETTINGS AND RETURN TO THE CONFIGURATION MENU, HIGHLIGHT THIS ITEM AND PUSH THE *PLAYER 1 START* BUTTON. |

### SYSTEM CONFIGURATION OPTION SETTINGS

| | | | | | |
|---|---|---|---|---|---|
| 1. COIN MODE | 1 COIN<br>1 CREDIT | 1 COIN<br>2 CREDITS | 1 COIN<br>3 CREDITS | 1 COIN<br>4 CREDITS | 1 COIN<br>5 CREDITS |
| | 1 COIN<br>6 CREDITS | 1 COIN<br>7 CREDITS | 1 COIN<br>8 CREDITS | 1 COIN<br>9 CREDITS | 2 COINS<br>1 CREDIT |
| | 3 COINS<br>1 CREDIT | 4 COINS<br>1 CREDIT | 5 COINS<br>1 CREDIT | 6 COINS<br>1 CREDIT | 7 COINS<br>1 CREDIT |
| | 8 COINS<br>1 CREDIT | 9 COINS<br>1 CREDIT | **2 COINS START<br>1 COIN CONTINUE** | FREE PLAY | |
| 2. CHUTE TYPE | 2 PLAYERS<br>1 CHUTE SINGLE | **2 PLAYERS<br>2 CHUTES SINGLE** | 2 PLAYERS<br>2 CHUTES MULTI | 3 PLAYERS<br>1 CHUTE SINGLE | 3 PLAYERS<br>2 CHUTES SINGLE |
| | 3 PLAYERS<br>3 CHUTES SINGLE | 3 PLAYERS<br>3 CHUTES MULTI | 4 PLAYERS<br>1 CHUTE SINGLE | 4 PLAYERS<br>2 CHUTES SINGLE | 4 PLAYERS<br>2 CHUTES MULTI |
| | 4 PLAYERS<br>4 CHUTES SINGLE | 4 PLAYERS<br>4 CHUTES MULTI | | | |
| 2. CONTINUE | **ON** | | OFF | | |
| 3. MONITOR | **NORMAL** | | FLIP | | |
| 4. DEMO SOUND | **ON** | | OFF | | |
| 5. SOUND MODE | **STEREO (Q SOUND)** | | MONAURAL | | |

NOTE: **FACTORY SETTING**



Proprietary and confidential information, not to be disclosed or copied without the express permission of CAPCOM® COIN-OP, INC.

# GAME CONFIGURATION

### CHANGING THE GAME CONFIGURATION SETTINGS

Move the *PLAYER 1 JOYSTICK* up or down to highlight the desired option. Once the option is highlighted, move the *PLAYER 1 JOYSTICK* left or right or press the *PLAYER 1 ATTACK* button to select.

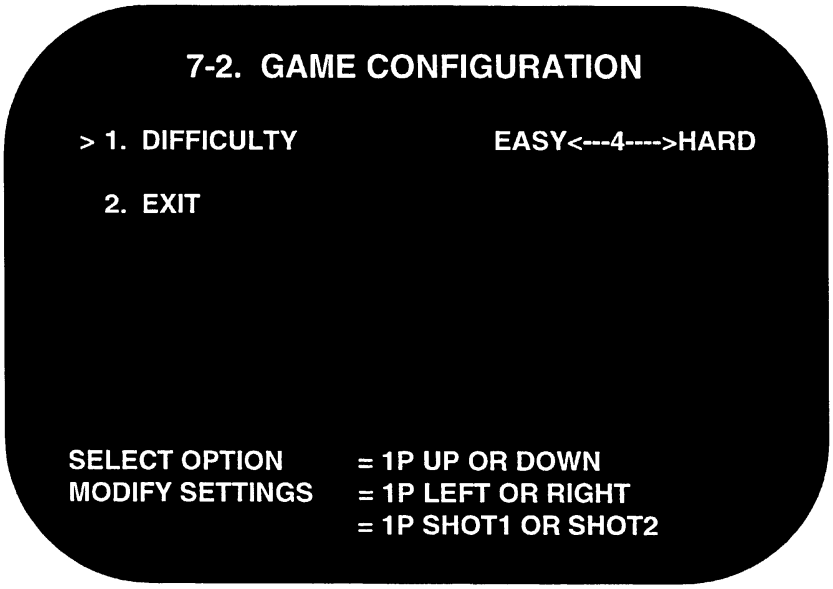


### GAME CONFIGURATION ITEM DESCRIPTIONS

| | |
|---|---|
| 1. DIFFICULTY | SETS THE GAME DIFFICULTY. |
| 2. EXIT | RETURN TO THE CONFIGURATION MENU. |

### GAME CONFIGURATION OPTIONS

| | | | | |
|---|---|---|---|---|
| 1. DIFFICULTY | 1<br>EASIEST | 2<br>VERY EASY | 3<br>EASY | **4<br>MEDIUM** |
| | 5<br>MEDIUM HARD | 6<br>HARD | 7<br>VERY HARD | 8<br>HARDEST |

NOTE: **FACTORY SETTING**

Proprietary and confidential information, not to be disclosed or copied without the express permission of CAPCOM® COIN-OP, INC.

## JAMMA CONNECTIONS

| SOLDER SIDE | | | COMPONENT SIDE |
|---|---|---|---|
| GND | A | 1 | GND |
| GND | B | 2 | GND |
| +5 VDC | C | 3 | +5 VDC |
| +5 VDC | D | 4 | +5 VDC |
| N.C. | E | 5 | N.C. |
| +12 VDC | F | 6 | +12 VDC |
| KEY | H | 7 | KEY |
| N/C | J | 8 | COIN COUNTER 1 |
| COIN LOCK 2 | K | 9 | COIN LOCK 1 |
| *SPEAKER (-) | L | 10 | *SPEAKER (+) |
| N.C. | M | 11 | N.C. |
| VIDEO GREEN | N | 12 | VIDEO RED |
| VIDEO SYNC | P | 13 | VIDEO BLUE |
| SERVICE (FREE CREDIT) | R | 14 | VIDEO GROUND |
| N/C | S | 15 | TEST MODE |
| COIN 2 | T | 16 | COIN 1 |
| 2 PLAYER - START | U | 17 | 1 PLAYER - START |
| 2 PLAYER - JOYSTICK UP | V | 18 | 1 PLAYER - JOYSTICK UP |
| 2 PLAYER - JOYSTICK DOWN | W | 19 | 1 PLAYER - JOYSTICK DOWN |
| 2 PLAYER - JOYSTICK LEFT | X | 20 | 1 PLAYER - JOYSTICK LEFT |
| 2 PLAYER - JOYSTICK RIGHT | Y | 21 | 1 PLAYER - JOYSTICK RIGHT |
| 2 PLAYER - "ATTACK" BUTTON | Z | 22 | 1 PLAYER - "ATTACK" BUTTON |
| 2 PLAYER - "JUMP" BUTTON | a | 23 | 1 PLAYER - "JUMP" BUTTON |
| 2 PLAYER - "MAGIC" BUTTON | b | 24 | 1 PLAYER - "MAGIC" BUTTON |
| 2 PLAYER - "SELECT" BUTTON | c | 25 | 1 PLAYER - "SELECT" BUTTON |
| N/C | d | 26 | N/C |
| GND | e | 27 | GND |
| GND | f | 28 | GND |

## 3 & 4 PLAYER AUXILIARY CABLE (P/N 03-0052) CONNECTIONS

| WIRE COLOR | CONNECTOR ODD ROW | | | CONNECTOR EVEN ROW | WIRE COLOR |
|---|---|---|---|---|---|
| BLACK | GND | 1 | 2 | GND | BLACK |
| | N/C | 3 | 4 | N/C | |
| YELLOW | +12VDC | 5 | 6 | +12VDC | YELLOW |
| PURPLE/WHITE | LOCK OUT 3 | 7 | 8 | LOCK OUT 4 | DK.BLUE/WHITE |
| PURPLE/YELLOW | COIN 3 | 9 | 10 | COIN 4 | BLUE/YELLOW |
| WHITE | 3 PLAYER - START | 11 | 12 | 4 PLAYER - START | BLACK/WHITE |
| GRAY | 3 PLAYER - JOYSTICK UP | 13 | 14 | 4 PLAYER - JOYSTICK UP | GRAY/WHITE |
| PINK | 3 PLAYER - JOYSTICK DOWN | 15 | 16 | 4 PLAYER - JOYSTICK DOWN | PINK/WHITE |
| RED | 3 PLAYER - JOYSTICK LEFT | 17 | 18 | 4 PLAYER - JOYSTICK LEFT | RED/WHITE |
| BLUE | 3 PLAYER - JOYSTICK RIGHT | 19 | 20 | 4 PLAYER - JOYSTICK RIGHT | LT.BLUE/WHITE |
| GRAY/YELLOW | 3 PLAYER - "ATTACK" BUTTON | 21 | 22 | 4 PLAYER - "ATTACK" BUTTON | GRAY/WHITE |
| PINK/YELLOW | 3 PLAYER - "JUMP" BUTTON | 23 | 24 | 4 PLAYER - "JUMP" BUTTON | PINK/WHITE |
| RED | 3 PLAYER - "MAGIC" BUTTON | 25 | 26 | 4 PLAYER - "MAGIC" BUTTON | RED/WHITE |
| LT. BLUE | 3 PLAYER - "SELECT" BUTTON | 27 | 28 | 4 PLAYER - "SELECT" BUTTON | LT. BLUE/WHITE |
| GRAY/YELLOW | TEST BRKT-VOLUME UP | 29 | 30 | TEST BRKT-VOLUME DOWN | PINK/YELLOW |
| BLACK/WHITE | TEST BRKT-VOLUME GND | 31 | 32 | N/C | |
| BLACK | N/C | 33 | 34 | N/C | BLACK |



Proprietary and confidential information, not to be disclosed or copied without the express permission of CAPCOM® COIN-OP, INC.

1-3/16" DRILL FOR
1P OR 2P START
BUTTON SWITCH

1-3/4" DRILL FOR
JOYSTICK HOLE

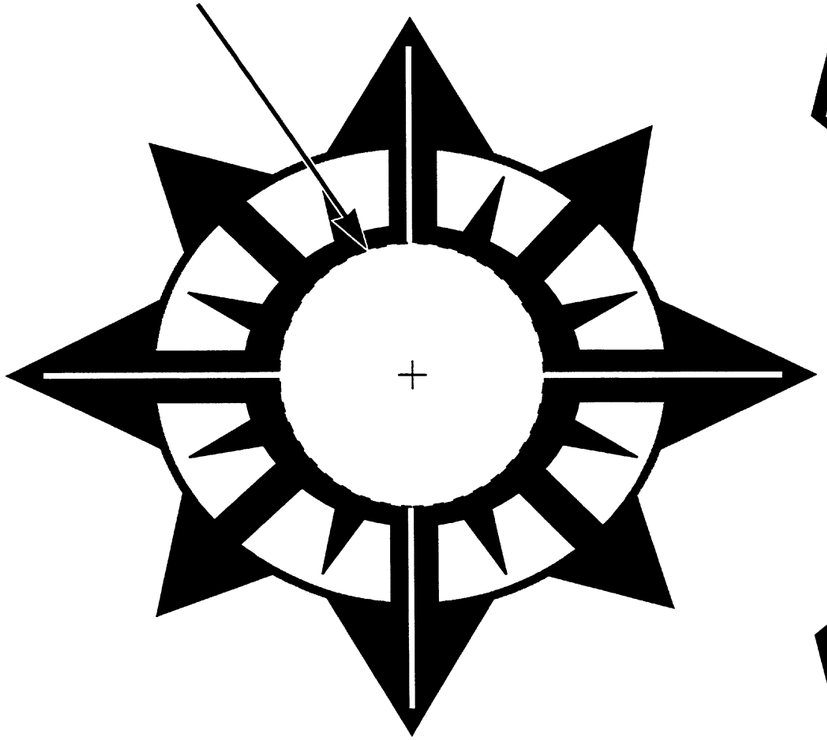

ATTACK

JUMP

MAGIC:
ITEMS/SPELLS

1-3/16" DRILL FOR
BUTTON SWITCH HOLES

SELECT:
ITEMS/SPELLS

CAPCOM COIN-OP, INC.
3311 NORTH KENNICOTT AVENUE
ARLINGTON HEIGHTS, ILLINOIS 60004
PHONE (708) 797-6100
FAX (708) 797-6119

TITLE
2-PLAYER DRILL TEMPLATE:
"DUNGEONS & DRAGONS"

| DATE | DRAWN BY: |
|---|---|
| 3-6-96 | JA |
| V100100 | REV. |

## GAME CASE CONTROLS:

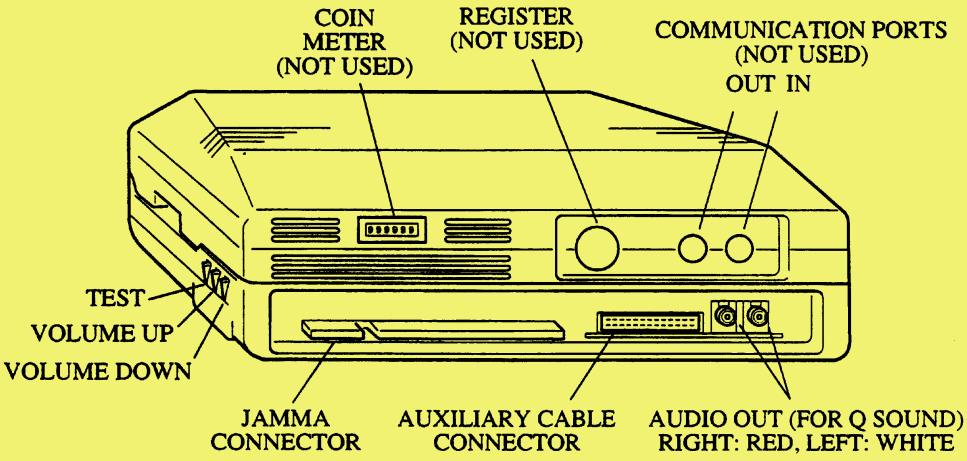


V300800

## TYPICAL CONTROL PANEL LAYOUTS:

2 PLAYER

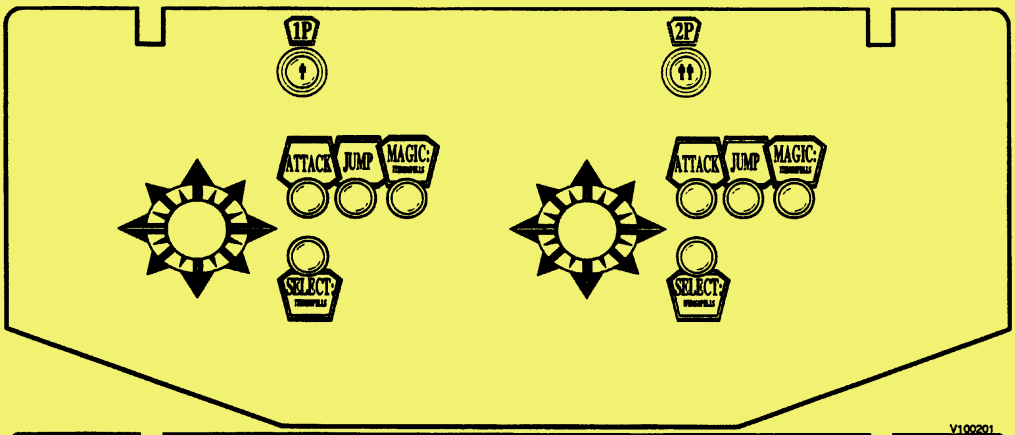


3 PLAYER

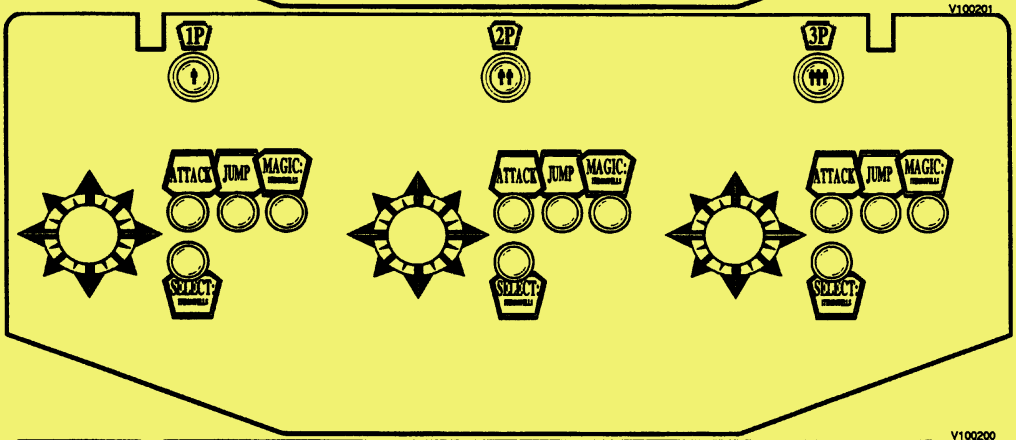


4 PLAYER

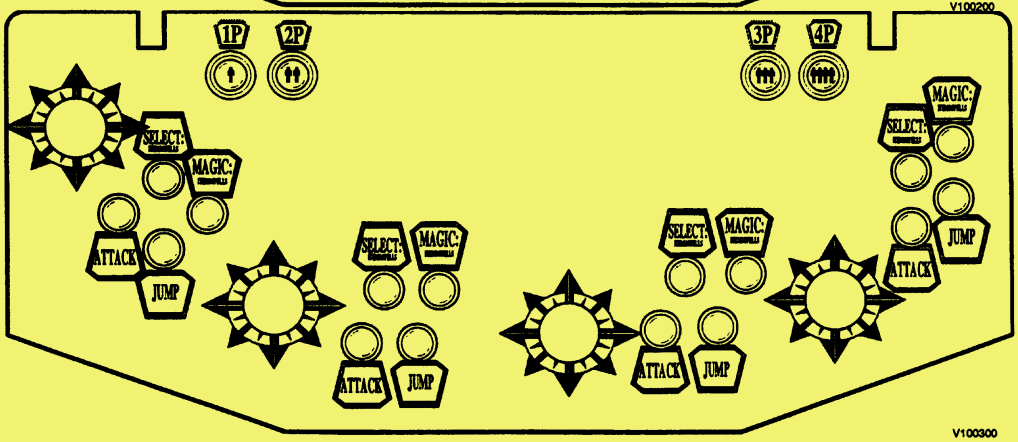


V100300

Proprietary and confidential information, not to be disclosed or copied without the express permission of CAPCOM® COIN-OP, INC.

## NOTICE

This equipment has been tested and found to comply with the limits for a Class A digital device, pursuant to Part 15 of the FCC Rules. These limits are designed to provide reasonable protection against harmful interference when the equipment is operated in a commercial environment. This equipment generates, uses, and can radiate radio frequency energy and, if not installed and used in accordance with the instruction manual, may cause harmful interference to radio communications. Operation of this equipment in a residential area is likely to cause harmful interference, in which case the user will be required to correct the interference at his own expense.




## WARNING

Federal law provides severe civil and criminal penalties for the unauthorized reproduction, distribution, or exhibition of copyrighted audiovisual works and video games.

The Federal Bureau of Investigation investigates allegations of criminal copyright infringement.

CAPCOM® COIN-OP, INC.
3311 N. Kennicott Avenue
Arlington Heights, Illinois 60004
Phone: (847) 797-6100
Fax: (847) 797-6306

Copyright © 1996 CAPCOM ® COIN-OP, INC., All Rights Reserved