
TAITO
ELEVATOR
Action!
TM

ELEVATOR ACTION™

The object of the game is to make it through the building, get secret documents, & get to an awaiting getaway car. You can use the jump kick button to dodge bullets and kick bad guys.

Use the fire button to stop enemy agents. Go in the red doors for surprise bonus points. You must go through all red doors to get the top secret documents, or you can't escape.

Agent 17 *code name "OTTO"* is to secure top secret documents from the security building. Enemy spys are in pursuit, and their orders are to stop him at any cost. After reaching the tip of a 30 story building, Agent 17 has to make his way down to the basement and the awaiting getaway car.
Otto is relying on your skills so GOOD LUCK!

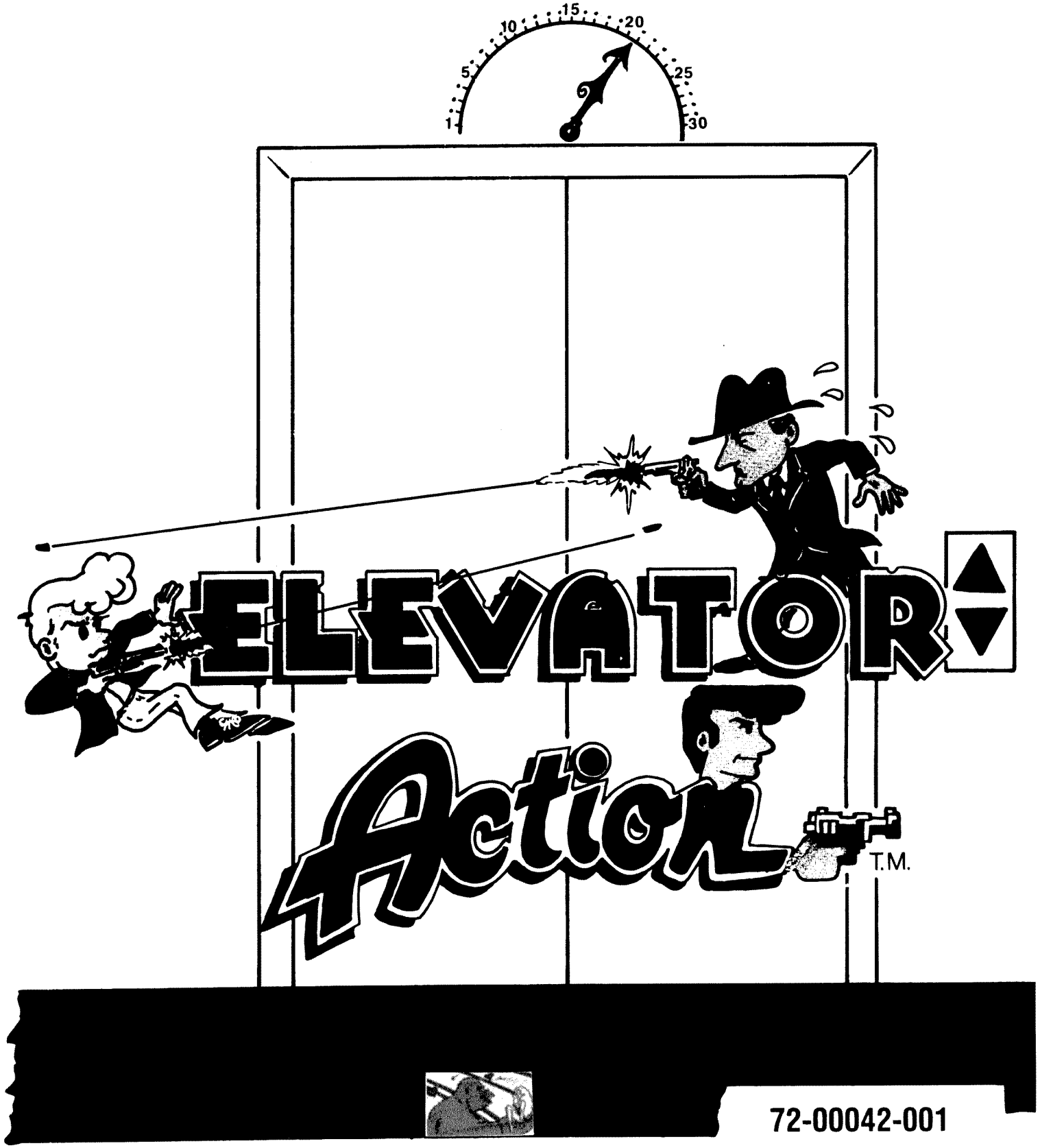

72-00042-001

TAITO © 1983 Trade Marks of Taitc America Corporation

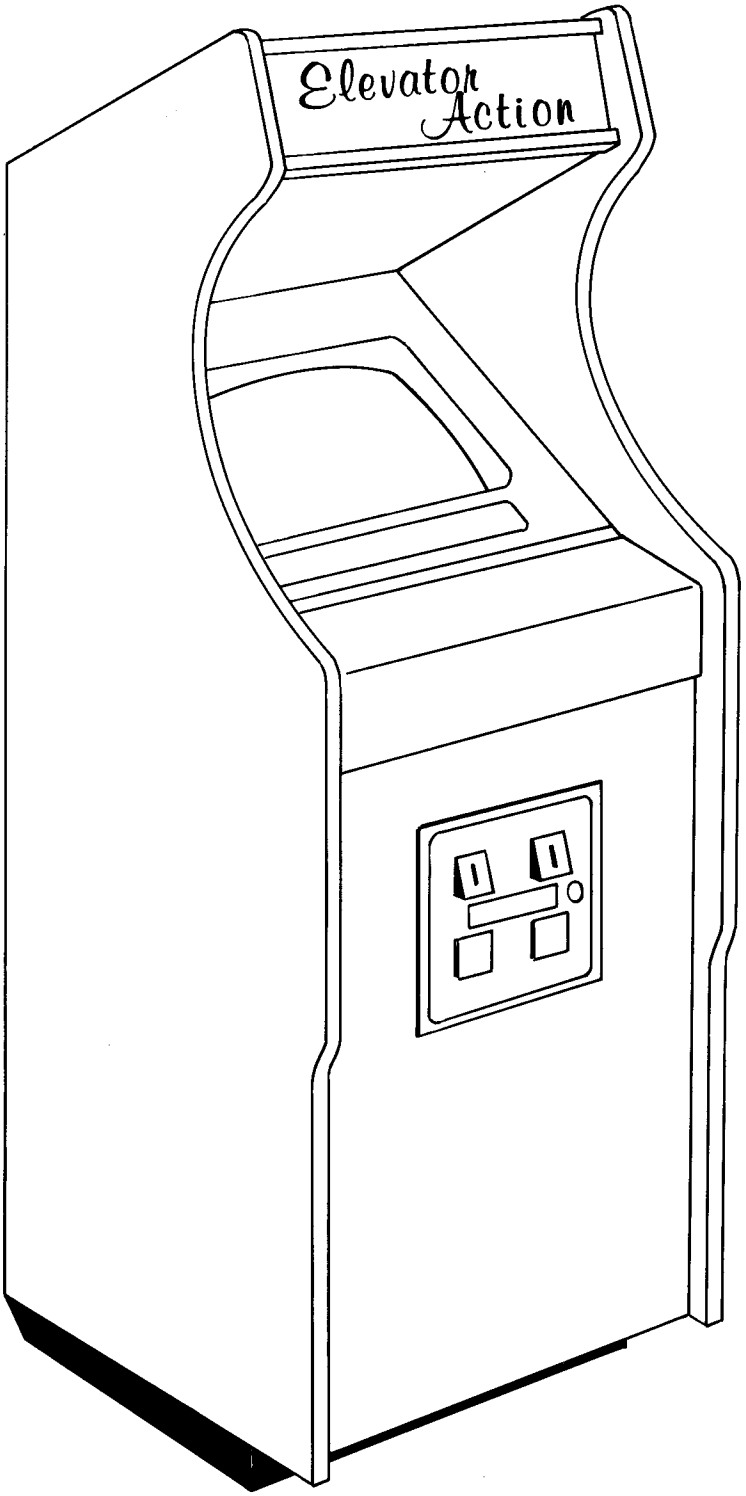
Elevator Action

"ELEVATOR ACTION"™ UPRIGHT
TABLE OF CONTENTS

1. "ELEVATOR ACTION"™ GAME SET-UP

A. GAME FEATURES 1
B. INTRODUCTION 1
C. GAME INSTALLATION 1
D. DIP SWITCH AND VOLUME CONTROL SETTINGS 1-3

2. MAINTENANCE

A. CLEANING 3
B. FUSE REPLACEMENT 3
C. VIDEO MONITOR REMOVAL 3
D. PRE GAME INSTALLATION 4
E. COVERGLASS REMOVAL 4
F. PRINTED CIRCUIT BOARD REPLACEMENT 4

3. ILLUSTRATION & PARTS LISTS

FIGURE 7 INCANDESCENT PANEL 5
FIGURE 8 4-WAY JOYSTICK 6
FIGURE 9 CONTROL PANEL 7
FIGURE 10 DOOR ASSEMBLY SJC-3 8
FIGURE 11 DOOR ASSEMBLY SJC-2 9-10
FIGURE 12 COIN DOOR 11-12
FIGURE 13 COIN DOOR 13-14
FIGURE 14 COIN DOOR 15-16
FIGURE 15 CABINET ASSEMBLY REAR VIEW 17-18
FIGURE 16 CABINET ASSEMBLY FRONT VIEW 19-20
FIGURE 17 POWER SUPPLY COMPONENT LAYOUT 21-23
FIGURE 18 POWER SUPPLY SCHEMATIC 1 of 1 24
FIGURE 19 FILTER BOARD 25
FIGURE 20 ROM BOARD *(4 BOARD SYSTEM)* 26-28
FIGURE 21 ROM BOARD *(5 BOARD SYSTEM)* 29-31
FIGURE 22 GAME BOARD *(4 & 5 BOARD SYSTEM)* 32-41
FIGURE 23 VIDEO BOARD *(4 & 5 BOARD SYSTEM)* 42-48
FIGURE 24 CPU BOARD *(4 BOARD SYSTEM)* 49-55
FIGURE 25 CPU BOARD *(5 BOARD SYSTEM)* 56-60
FIGURE 26 SECURITY BOARD *(5 BOARD SYSTEM)* 61-64

4. WIRING DIAGRAM FOLDOUT

"ELEVATOR ACTION"™ UPRIGHT

1. GAME SET-UP

A. GAME FEATURES

TAITO AMERICA CORPORATION'S "ELEVATOR ACTION"™ upright game is housed in a compact and highly serviceable cabinet with many added features.

A larger designed cash box has been incorporated into the design of this cabinet.

By putting wheels on the cabinet, moving the game from one location to another is made much easier.

The Control Panel has a polycarbonate overlay, so cigarette marks and mars can easily be wiped clean. This overlay can be replaced if necessary.

The Marquee and Coverglass are made of fully Tempered Glass to minimize breakage.

The Back Service Door houses all the P.C. Boards for the system making servicing of the game, if needed, much easier.

Lighted instructions are provided to further enhance the game and attract players, by making the instructions easier to read.

B. INTRODUCTION

TAITO AMERICA CORPORATION'S "ELEVATOR ACTION"™ upright game is designed for one or two players.

Agent 17 (code name "Otto") is to secure the top secret documents from the security building. The enemy spies are in pursuit and their orders are to stop him at any cost. Having made it to the top of a 30 story building Agent 17 has to make his way down to the basement to get to the getaway car and save the documents. Enemy spies are everywhere and the documents are hidden behind the red doors (bonus points awarded). He has to open the door and keep moving. If either of them shoots the lights out there will be a temporary blackout. If Otto finds himself on top of the elevator the player will not be able to control the elevator. If he gets caught in the elevator he is a sitting duck and cannot duck the bullets. By using the escalator he can reach the basement quicker. Otto can defeat his enemy by jump kicking or firing at them. Help Otto to grab all the documents and escape the spies.

C. GAME INSTALLATION

TAITO AMERICA CORPORATION'S "ELEVATOR ACTION"™ upright game is shipped ready for operation, but a last visual check should be made to insure the game is in good condition. Please verify the following before turning the game on.

Check the exterior of the game for shipping damage, chips, dents, or broken parts.

* Open the Rear Service Door and check for any interior damage.
* Make sure there isn't any damage to the wiring.
* Check the Printed Circuit Boards, making sure there is no damage to the components.
* Check fuses to make sure they are firmly in their holders.
* Check for loose foreign objects, especially metal objects which may cause electrical problems.
* Check Plug-in Connectors making sure they are firmly in their sockets.
* Check Switches making sure they are not damaged.

The Video Monitor is properly adjusted before shipping. If there are any adjustments necessary, refer to our Video Monitor Manual (72-00025-001). This manual contains all the manufacturers recommendations for adjusting the video monitor.

POWER REQUIREMENTS

TAITO AMERICA CORPORATION's "ELEVATOR ACTION"™ upright game is shipped ready for operation at 120VAC, 60Hz with a power consumption of approximately 250 Watts.

CAUTION

For safe operation it is recommended the cabinet be grounded. This game is equipped with a three conductor power cable. The third conductor is the ground conductor and when the cable is plugged into an appropriate receptacle the game is grounded. The offset pin on the power cable's three-prong connector is the ground connection.

LOCATION SPACE

Depth 35" (87.5cm)
Width 24" (61cm)
Height 68" (171cm)
Weight 300 lbs.
(Packaged Weight)

D. DIP SWITCH AND VOLUME CONTROL SETTINGS

DIP SWITCHES

TAITO AMERICA CORPORATION'S "ELEVATOR ACTION" game provides the following option switches. See Figure 1. These option switches can be found on the Game Board (99-AA017808).

FIGURE 1

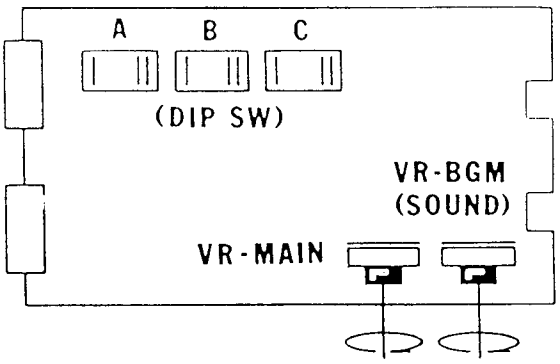

DIP SWITCH A

SETTING		1	2	3	4	5	6	7	8
BONUS POINTS FOR ADDITIONAL PLAYER	10,000 pts	off	off						
	15,000 pts	on	off						
	20,000 pts	off	on						
	25,000 pts	on	on						
FREE PLAY	NORMAL			off					
	FREE PLAY			on					
NUMBER OF PLAYERS	3				off	off			
	4				on	off			
	5				off	on			
	6				on	on			
SCREEN INVERSION								off	
								on	
GAME STYLE	COCKTAIL TABLE								off
	UPRIGHT								on

NOTE: SW 6 must always be off.

DIP SWITCH B

	SETTING POSITION							
	ONE WAY				TWO WAY			
	1	2	3	4	5	6	7	8
1 Coin - 1 Play	on	on	on	on	on	on	on	on
1 Coin - 2 Plays	off	on	on	on	off	on	on	on
1 Coin - 3 Plays	on	off	on	on	on	off	on	on
2 Coins- 1 Play	on	on	on	off	on	on	on	off
3 Coins- 1 Play	off	on	on	off	off	on	on	off
4 Coins- 1 Play	on	off	on	off	on	off	on	off

DIP SWITCH C

SETTING	POSITION	1	2	3	4	5	6	7	8
COIN DISPLAY	DISPLAY	X	X	X	X	OFF	X	X	X
	NO DISPLAY	X	X	X	X	ON	X	X	X
YEAR DISPLAY	DISPLAY	X	X	X	X	X	OFF	X	X
	NO DISPLAY	X	X	X	X	X	ON	X	X
NO HIT	NORMAL	X	X	X	X	X	X	OFF	X
	NO HIT	X	X	X	X	X	X	ON	X
COINAGE	2-WAY	X	X	X	X	X	X	X	OFF
	1-WAY	X	X	X	X	X	X	X	ON
DIFFICULTY SETTING	VERY EASY	OFF	OFF	X	X	X	X	X	X
	EASY	ON	OFF	X	X	X	X	X	X
	DIFFICULT	OFF	ON	X	X	X	X	X	X
	EXPERT	ON	ON	X	X	X	X	X	X

VOLUME CONTROL SETTING

The Volume increases by turning the potentiometer as indicated in Figure 2.

VOLUME CONTROL LOCATIONS
FIGURE 2

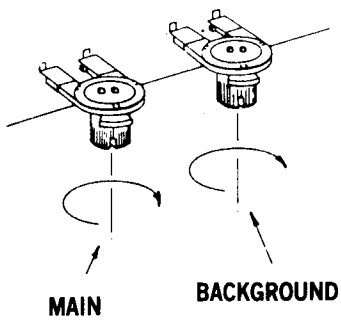

POWER ON OFF SWITCH

The power on/off switch is located in the front lower left hand corner of the cabinet.

2. MAINTENANCE

All games require a certain amount of maintenance to keep them in good condition. A periodic check of mechanical controls would be benefical to guarantee your game will be profitable.

A. CLEANING

The exterior of the game, all metal parts and all plastic parts can be cleaned with an non-abrasive cleanser. Caution should be used when cleaning the plastic, a dry cloth can cause scratches and result in a foggy appearance.

B. FUSE REPLACEMENT

This game contains 8 fuses. Seven of these fuses can be found on the Power Supply Assembly, five (5) are on the PCB and two (2) are on the Power Supply Bracket. One(1) is located at the bracket where the AC line cord comes into the cabinet. See Figure for location of these fuses.

FUSE REPLACEMENT
FIGURE 3

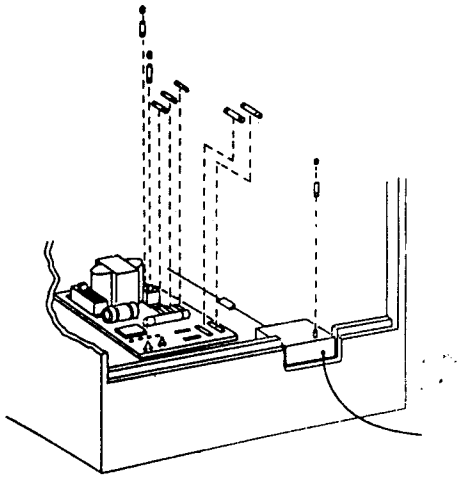

C. VIDEO MONITOR REMOVAL

If you need to remove the Video Monitor follow the instructions listed below:

NOTICE:

"This equipment complies with the requirements of Part 15 of FCC Rules for a Class A computing Device. Operation of this equipment in a residential area may cause unacceptable interference to radio and T.V. reception requiring the operator to take whatever steps are necessary to correct the interference."

* Disconnet the power from the line voltage.
* Disconnect the Monitor cable connector.
* While holding the monitor bracket take out the two rear side bolts, one on each side of the cabinet.
* Carefully lower the mounitor on to monitor stops.
* Remove the four mounting bolts and disconnect the braided ground wire.
* Slide the monitor out by pulling the monitor toward you.

CAUTION

Use extreme caution and do not touch electrical parts of the Monitor Yoke area with your hands or with any metal object in your hands! High voltages may exist in any Monitor, even with power disconnected.

MONITOR REMOVAL

FIGURE 4

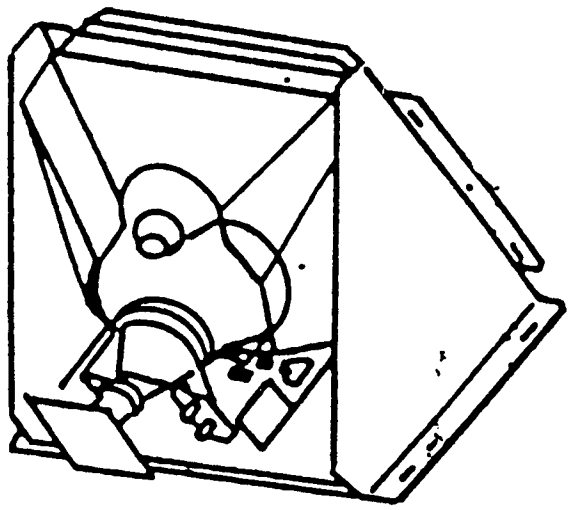

D. PRE GAME INSTALLATION

The following precautions should be followed when installing the game.

* Avoid rough handling of the game, the picture tube is fragile.
* Install the game on a level surface.
* Avoid installing the game where it may receive excessive sunlight or heat, to protect the game from rising internal temperatures.
* Do not install in a damp or dusty location.
* For a short time after connecting the power to the game, the picture may be temporarily distorted.

The monitor's purity is affected by the earth's magnetic field, causing a variation of color. By turning the game on for 10 or 15 seconds and then off for 20 to 30 minutes the automatic degaussing circuit applies a degaussing field the edges of the monitor. Doing this several times will correct the problem. Another way to correct this problem is to purchase a degaussing coil or bulk tape eraser at any Electronics store. This will help to immediately demagnetize the Video tube. Caution must be used with a degaussing coil so the magnetic field of the degaussing coil is not allowed to become too intense at any one place on the picture tube thereby causing a localized color distortion. If you move the game to another location after degaussing the problem may reappear. Refer to Monitor Manual

E. COVERGLASS REMOVAL

To remove the Coverglass follow the Instructions listed below:

1. Remove the control panel by reaching up through the Coin Door and unlatching the latching clamps.
2. Lift the Coverglass out. The Coverglass can now be easily removed from the front of the game with no screws. To replace the coverglass simply reverse the above procedure.
3. Be sure you are holding the glass firmly to ensure against any chipping or breakage.

FIGURE 5

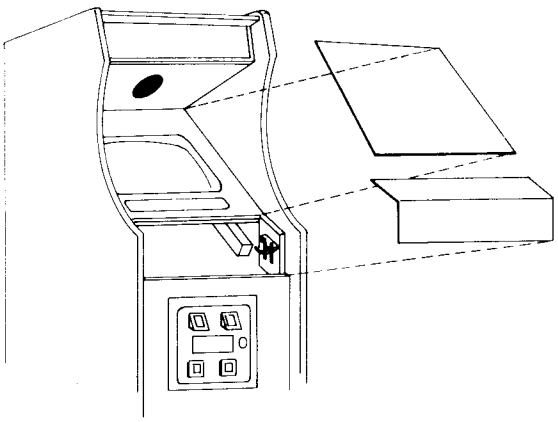

F. PRINTED CIRCUIT BOARD REPLACEMENT

You may wish to remove the "ELEVATOR ACTION"™ Printed Circuit Boards for servicing. Refer to Figure 6. The Elevator Action Printed Circuit Boards are located on the inside of the rear Service Door for easy access. To remove the boards the following steps should be followed:

1. Open the rear service door, the power will automatically be removed by the Interlock Switch located on the inside of the door frame.
2. Remove the speed nuts from studs and lift off shield.
3. Disconnect the connectors G, H and T from the boards.
4. Loosen and turn the Stop Bracket and slide the boards out of the board guides.

PRINTED CIRCUIT BOARD REPLACEMENT

FIGURE 6

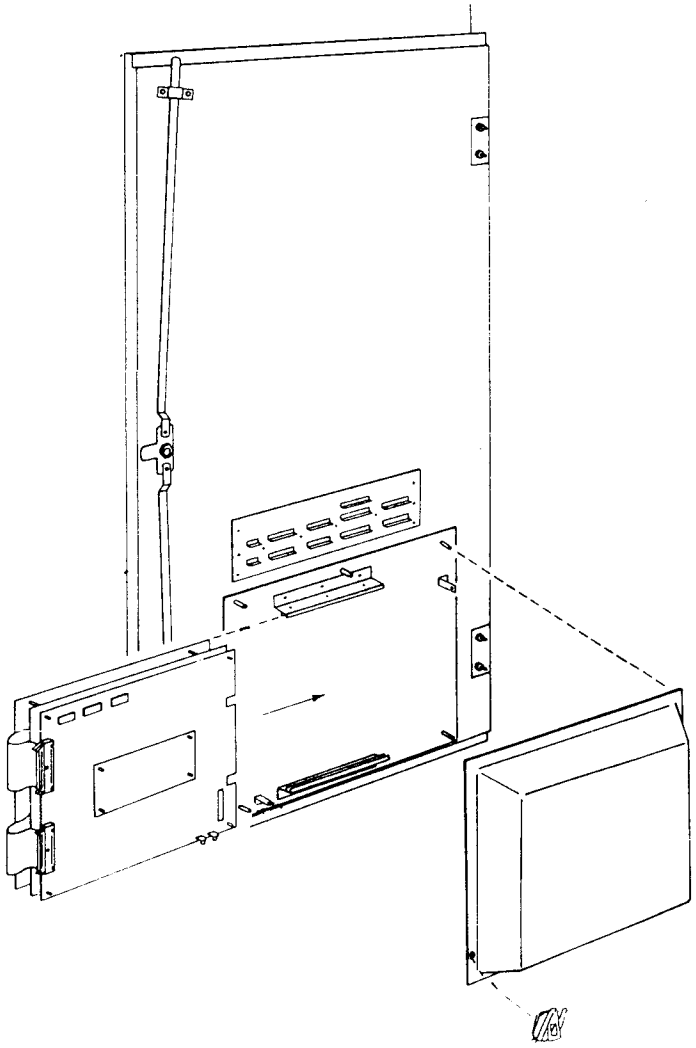

INCANDESCENT PANEL

FIGURE 7

ITEM	TAITO PART NO.	DESCRIPTION
1	27-00006-001	LAMP #47
2	26B00009-001	BAYONET BASE SOCKET
3	61D00112-001	MARQUEE LIGHTING PLATE

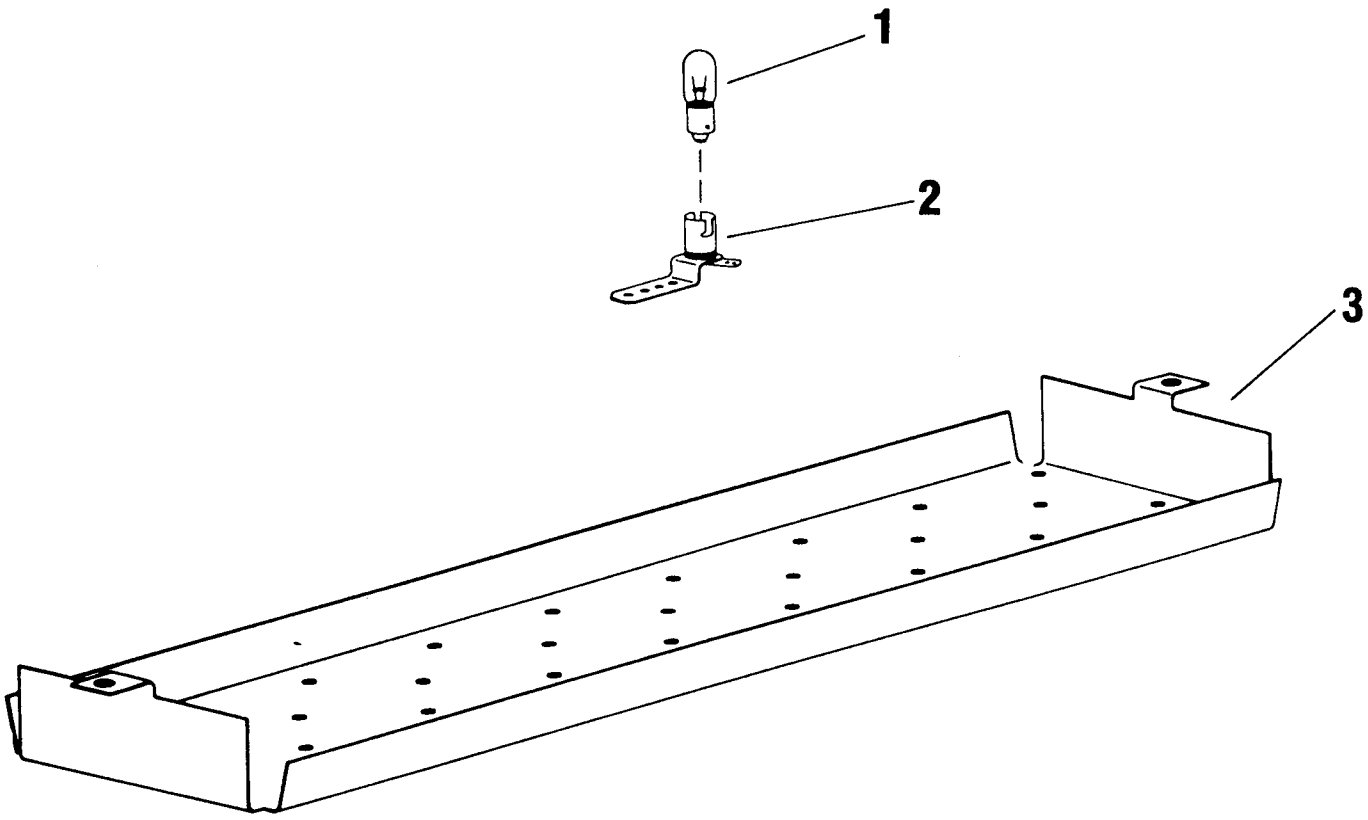

4-WAY JOYSTICK (63-00032-004)

FIGURE 8

ITEM	TATIO PART NO.	DESCRIPTION
1	63B00031-001	BALL & SHIFT
2	63A00033-001	MASK
3	63C00027-002	MOUNTING PLATE
4	62A00002-001	SHOCK MOUNT PLATE
5	63A00028-002	SWITCH PLATE
6	63A00030-002	ACTUATOR
7	61A00078-001	"L" BRACKET
8	63C00029-001	SWITCH SPACER
9	29B00016-002	LEAF SWITCH, SHORT
10	63A00029-001	SPACER
11	59B00020-017	"E" RING

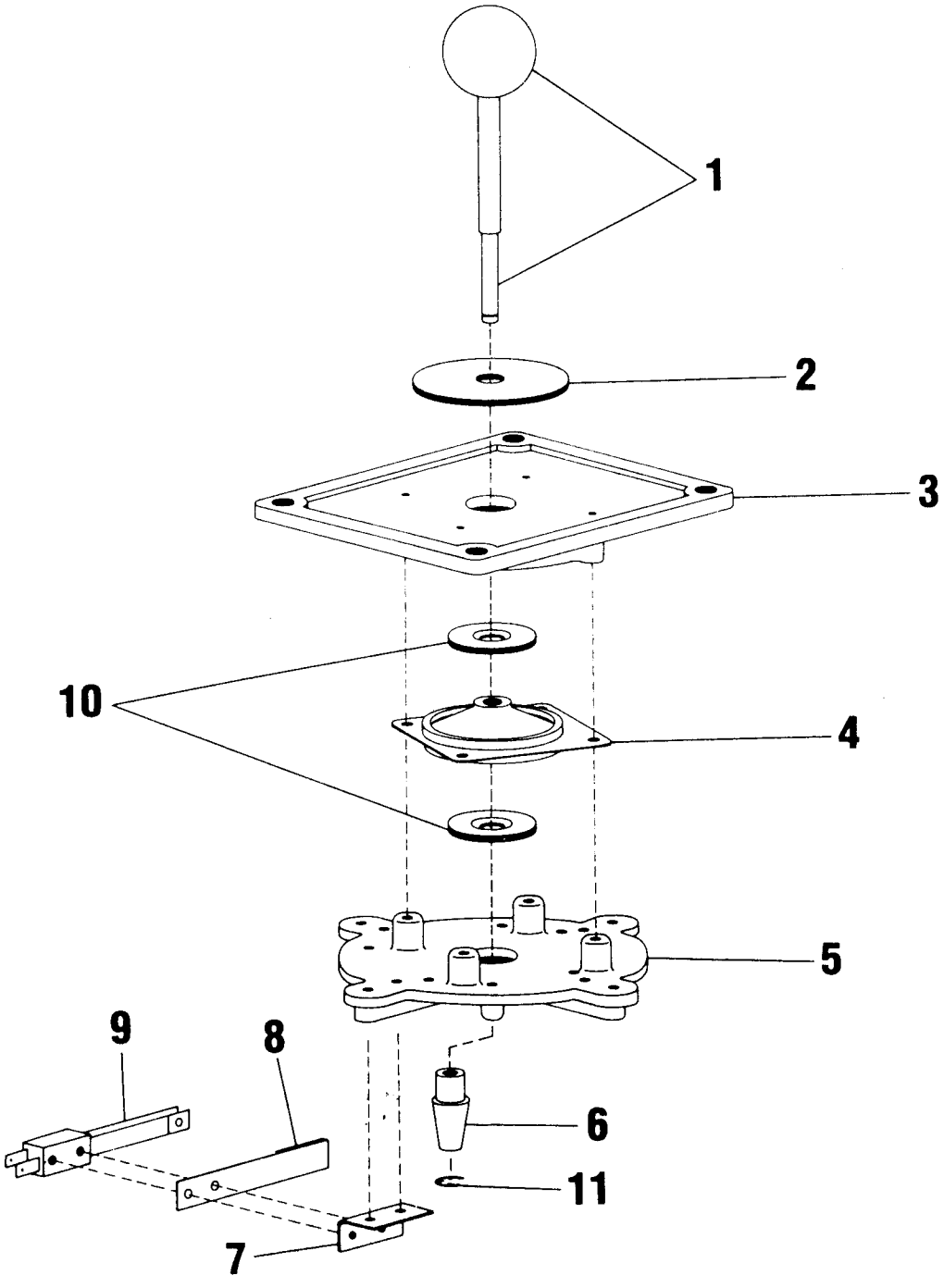

CONTROL PANEL

FIGURE 9

ITEM	TAITO PART NO.	DESCRIPTION
1	63B00024-001	PUSH BUTTON WHITE
2	42B00108-001	CLEAT, WOOD
3	61A00015-001	STRIKE HOOK
4	42-00150-001	MOUNTING PLATE
5	61-00216-001	METAL CONTROL PANEL
6	66-00003-001	CONTROL PANEL OVERLAY
7	63-00025-001	SWITCH SUPPORT
8	54A07001-008	NUT, STAMPED 5/8-11
9	29B00016-001	SWITCH LEAF

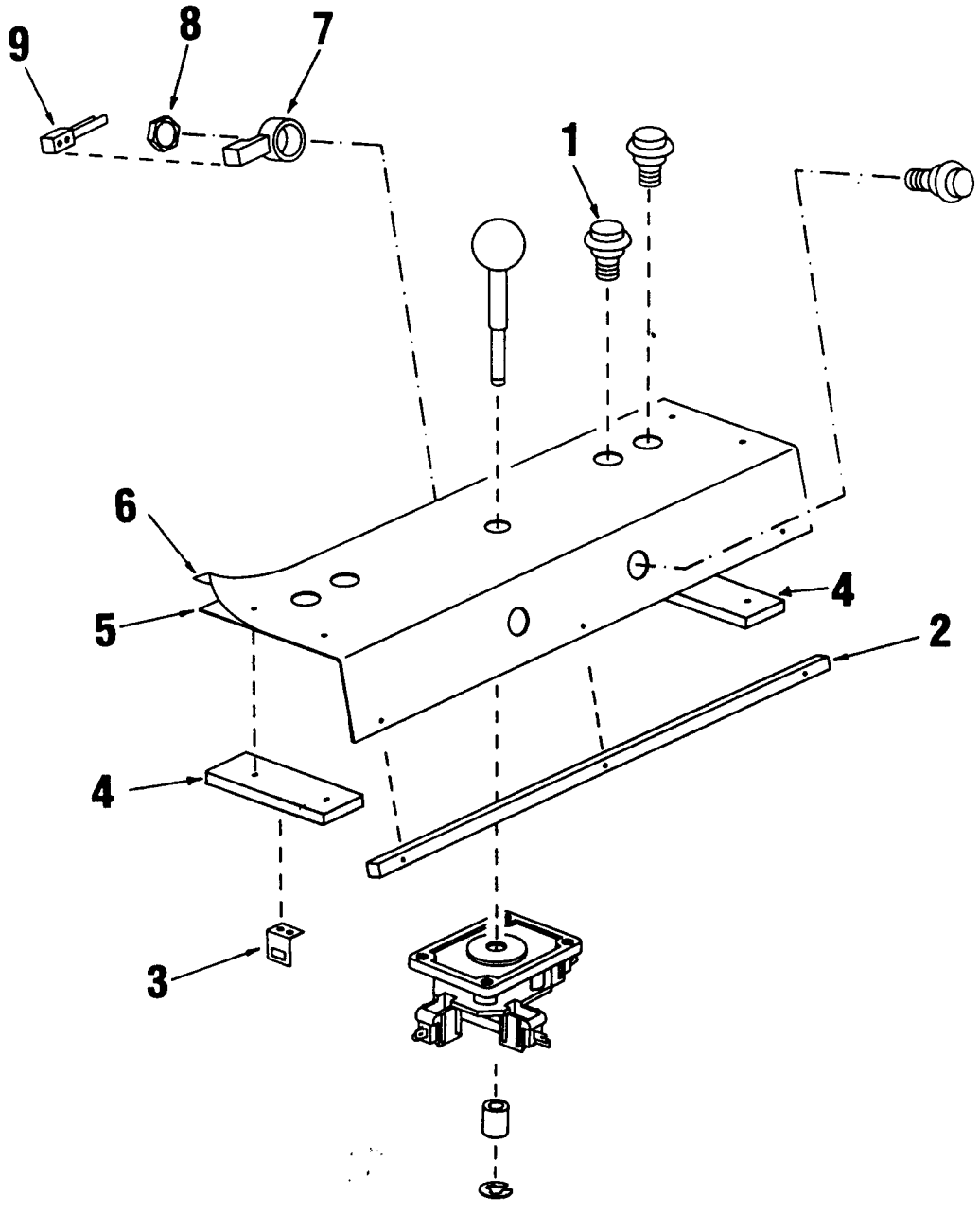

DOOR ASSEMBLY SJC-3

FIGURE 10

ITEM	TAITO PART NO.	DESCRIPTION
1	61-00142-001	LOCK ROD ASSEMBLY
2	08-00132-001	GAME BOARD SET
3	99-AA017808	GAME PCB
4	99-KN00004	CPU PCB
5	99-AA017810	VIDEO PCB
6	99-KN00005	ROM PCB
*6A	08-00116-003	SECURITY BOARD
7	08-00120-001	FILTER PCB
*8	07-00262-001	BRACKET PC BOARD, BOTTOM
9	61A00014-001	"L" BRACKET
10	07-00261-001	BRACKET PC BOARD, TOP
11	63-00140-001	PCB SHIELD
12	61-00111-001	BRACKET, LOCK ROD
13	61-00229-001	HINGE
14	42-00144-001	BACK DOOR
15	61-00300-001	GROUND PLATE
*16	59-00016-001	SPACER
17	59-00057-001	SPEED NUT

* Item not shown on drawing.

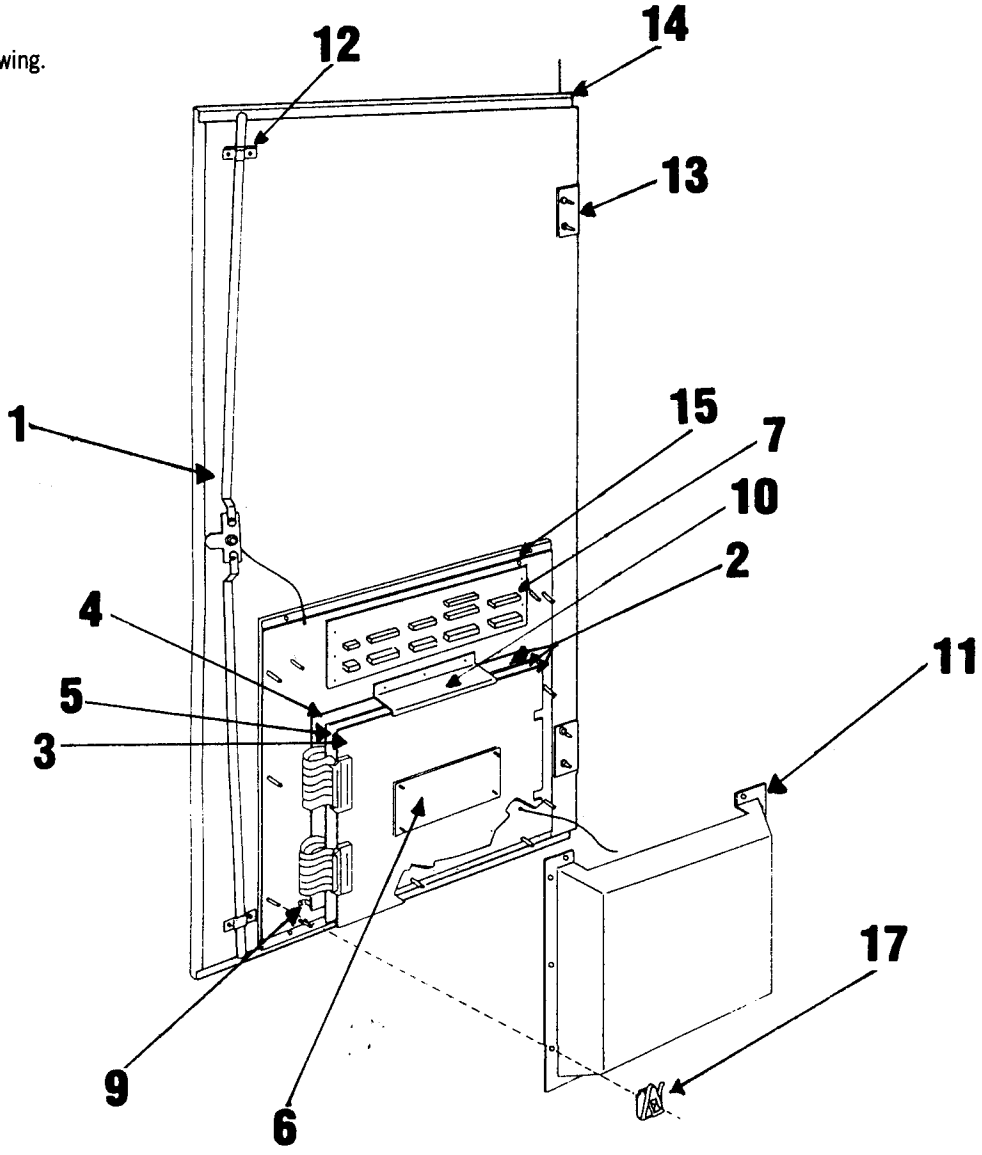

DOOR ASSEMBLY SJC-2

FIGURE 11

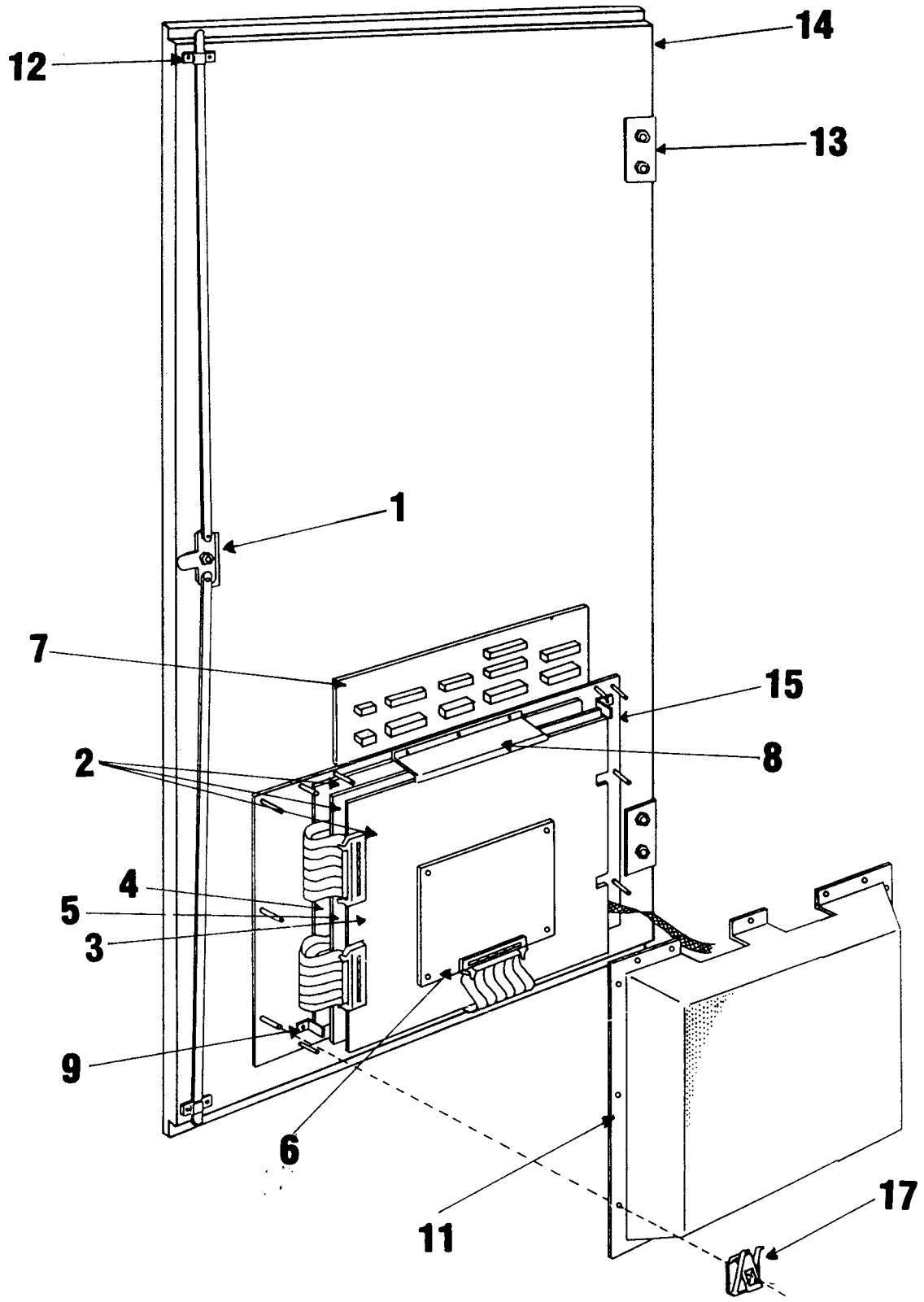

DOOR ASSEMBLY SJC-2

FIGURE 11

ITEM	TAITO PART NO.	DESCRIPTION
1	61-00142-001	LOCK ROD ASSEMBLY
2	08-00130-001	GAME BOARD SET
3	99-AA017808	GAME PCB
4	99-AA017809	CPU PCB
5	99-AA017810	VIDEO PCB
6	99-AA017811	ROM PCB
7	08-00120-001	FILTER PCB
8	07-00131-001	BRACKET PCB, TOP
9	61A00014-001	"L" BRACKET
10*	07-00248-001	BRACKET PCB, BOTTOM
11	63-00121-001	PCB SHIELD
12	61-00111-001	BRACKET, LOCK ROD
13	61-00229-001	HINGE
14	42-00134-001	BACK DOOR
15	61-00280-001	GROUND PLATE
16*	59-00016-001	SPACER
17	59-00057-001	SPEED NUT

* Item not shown on drawing.

COIN DOOR

FIGURE 12

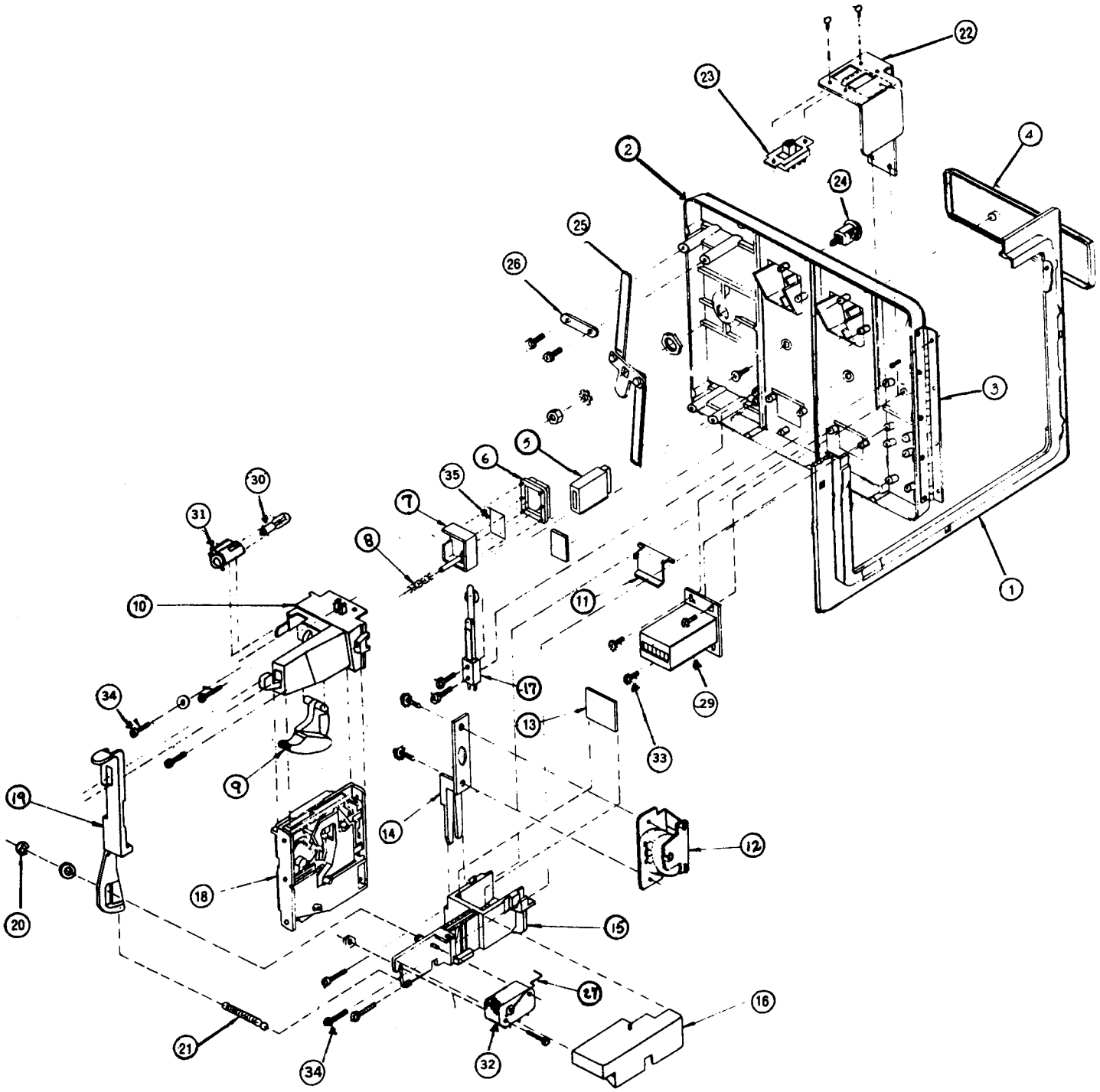

COIN DOOR
FIGURE 12

ITEM	TAITO PART NO.	DESCRIPTION	REFERENCE
1	61-00270-001	DOOR FRAME	15-8039
2	61-00271-001	DOOR	15-8038
3	61-00272-001	HINGE	30-9125
4	61-00273-001	TAITO NAME PLATE	15-8115
5	63-00124-001	COIN ENTRY SLOT	15-8074
6	63-00125-001	PUSH BUTTON COVER	15-8072
7	63-00126-001	PUSH BUTTON	15-8071
8	58-00007-001	COMPRESSION SPRING	30-7722
9	63-00127-001	REJECT LEVER	15-8084
10	61-00274-001	COIN CHUTE	15-8075
11	63-00128-001	COIN RETURN DOOR	15-8083
12	61-00275-001	LOCK OUT COIL	15-8081
13	61-00276-001	GUARD	15-8092
14	63-00129-001	COIL BRACKET	15-8080
15	23-00003-001	COIN RETURN BOX	15-8091
16	63-00130-001	SWITCH COVER	15-8043
17	29-00036-001	SLAM SWITCH	15-1255
18	59-00055-001	PLASTIC COIN ACCEPTOR .25	31-4014
19	63-00131-001	COIN ACCEPTOR RETAINER	15-8086
20	59-00020-025	1/4" E RING	30-0731
21	58-00008-001	EXTENSION SPRING	30-7372
22	61-00277-001	SERVICE SWITCH BRACKET	15-8030
23	29-00037-001	SERVICE SWITCH	23-1339
24	07-00242-001	LOCK 5/8" ASSEMBLY	34-1855
25	07-00243-001	LOCK CAM ASSEMBLY	55-2909
26	61-00278-001	LOCK CAM PLATE	55-2909
27	61-00279-001	WIRE FORM (COIN SWITCH)	23-1348
*28	09-00258-001	DOOR CABLE ASSEMBLY	15-0868
29	33-00002-001	COIN COUNTER 6VDC	31-4550
30	27-00008-001	LAMP #1815	21-1815
31	26-00019-001	LAMP SOCKET 25B4-L187	15-9419
32	29-00041-001	SWITCH	23-1347
33	51-02002-002	#6-32 X1/4 PR PH SCREW	
34	51-02002-006	#6-32 X 1/2 PR PH SCREW	
35	79-50034-001	.25 PRICE DECAL	

* Item not shown on drawing.

COIN DOOR

FIGURE 13

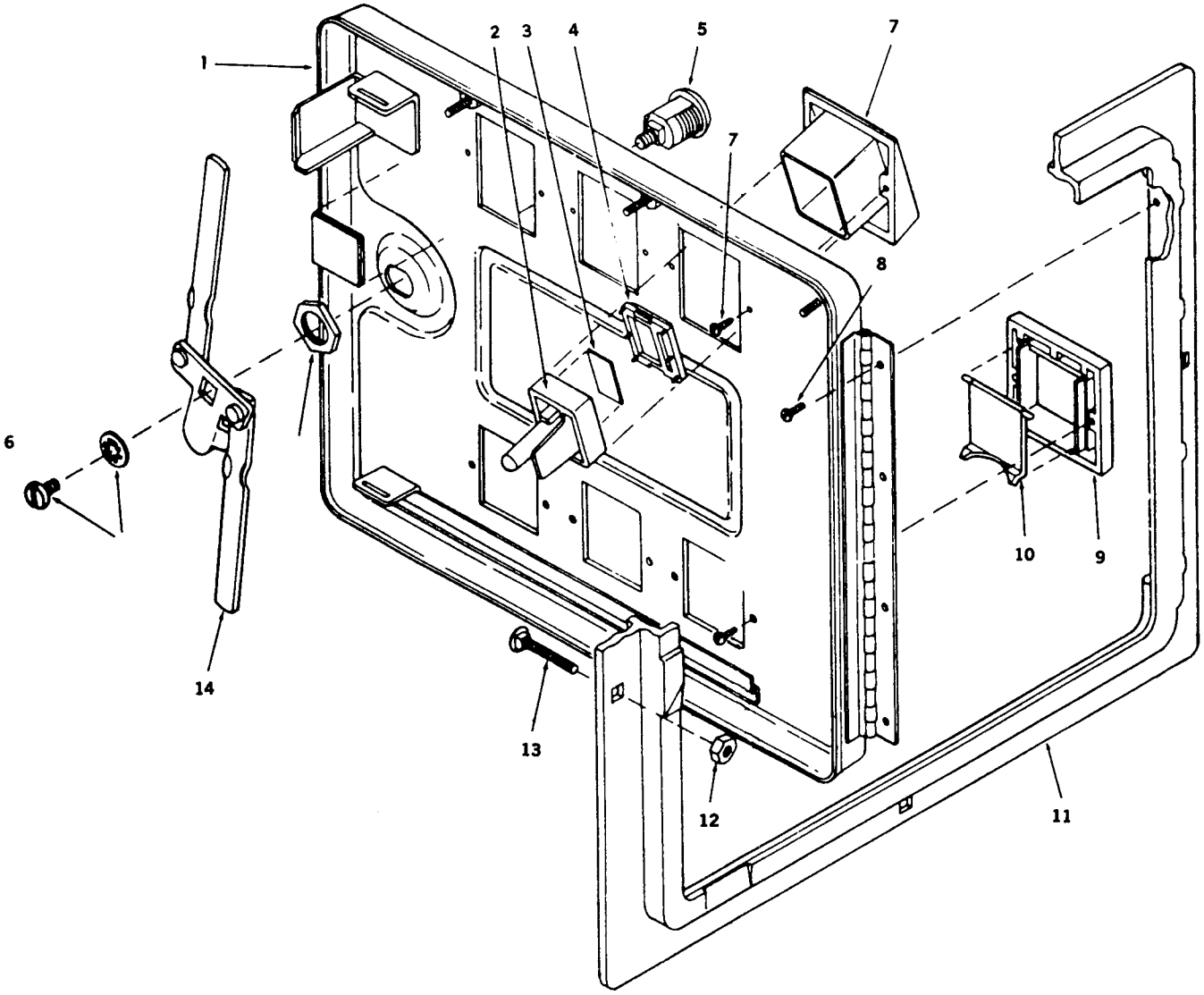

COIN DOOR
FIGURE 13

ITEM	TAITO PART NO.	DESCRIPTION	REFERENCE
1	61-00042-001	COIN DOOR ONLY (2 COIN)	404341
2	63-00015-001	COIN RETURN BUTTON	904591
3	79-50004-001	US ,25 PRICE DECAL	904703
4	63-00016-001	COIN RETURN BUTTON COVER	
5	07-00025-001	LOCK ASSEMBLY	904707-1
6	51-01051-003	SCREW #4 X 5/16 SL PH TYPE B	345-4-5
7	63-00011-001	COIN BUTTON HOUSING	904588
8	51-02051-002	SCREW #4-40 X 1/4 SL PH	325-4-4
9	63-00012-001	COIN RETURN BEZEL	904590
10	63-00013-001	COIN RETURN COVER	904599
11	61-00040-001	COIN DOOR FRAME 11 5/8 X 13 3/8 MOUNTS IN A 10 3/8 X 12 3/16 OPENING	
12	54-01005-001	HEX NUT 1/4-20	406-416
13	51A03003-113	CARRIAGE BOLT	904734
14	07-00026-001	LOCK CAM ASSEMBLY	404357

COIN DOOR

FIGURE 14

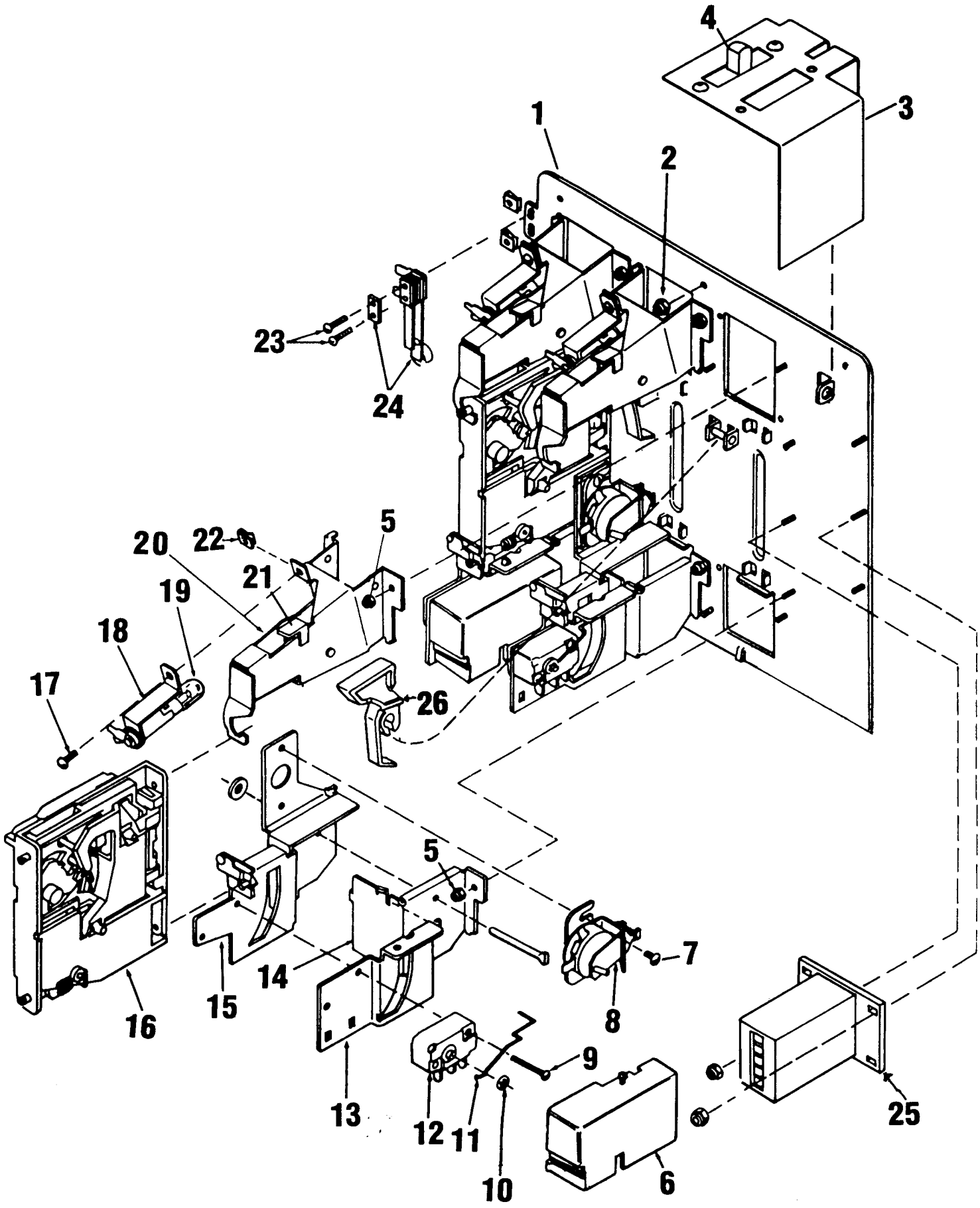

COIN DOOR
FIGURE 14

ITEM	TAITO PART NO.	DESCRIPTION	REFERENCE
1	07-00027-001	INNER PANEL W/LEVERS	404429 SUB ASSEMBLY
2	54-03013-001	NUT #8-32 400-8	
*	09-00017-001	CUSTOM HARNESS ASSEMBLY (SGL COIN)	
*	09-00017-002	CUSTOM HARNESS ASSEMBLY (DUAL COIN)	
3	61B00113-001	SERVICE SWITCH BRACKET	
4	29-00022-001	SERVICE SWITCH	
5	54-03011-001	NUT #4-40	904762
6	63-00014-001	SWITCH COVER	100-6-3
7	51-02052-001	SCREW #6-32 X 3/16 SS PH	404354
8	23-00001-001	C.R.E.M. COIL ASSEMBLY	100-4-12
9	51-02052-001	SCREW #6-32 X 3/16 SS PH	100-4-12
10	59-00019-001	RETAINER	900651
11	28-00029-001	SILVER SWITCH FOR US .25	904710-1
12	29-00007-001	SWITCH	904845
13	61-00044-001	COIN CHUTE	904701
14	61-00045-001	COIN RETURN BOX	904598
15	61-00025-001	SWITCH & C.R.E.M. COIL	404428
16	59-00018-001	.25 ACCEPTOR	5301-10
17	51-02051-006	SCREW 4-40 X 3/8 SS PH	110-4-6
18	27-00003-001	MINATURE BAYONET BASE LAMP 904717 * 26-00006-001 LAMP SOCKET	904717
19	27-00003-001	#47 LAMP (6.3 VOLT)	904716
20	61-00048-001	COIN INLET CHUTE	904418
21	61-00047-001	RIGHT HALF OF COIN INLET	904594 CHUTE
22	54-00001-001	"U" TYUPE FASTENER	904712
23	51-02051-006	SCREW 4-40 X 1/2 SS PH	116-4-8
24	29-00006-001	SLAM SWITCH ASSEMBLY	904704
25	33-00002-001	COIN METER	
26	63-00155-001	COIN REJECT LEVER	904583

* Item not shown on drawing.

CABINET ASSEMBLY REAR VIEW

FIGURE 15

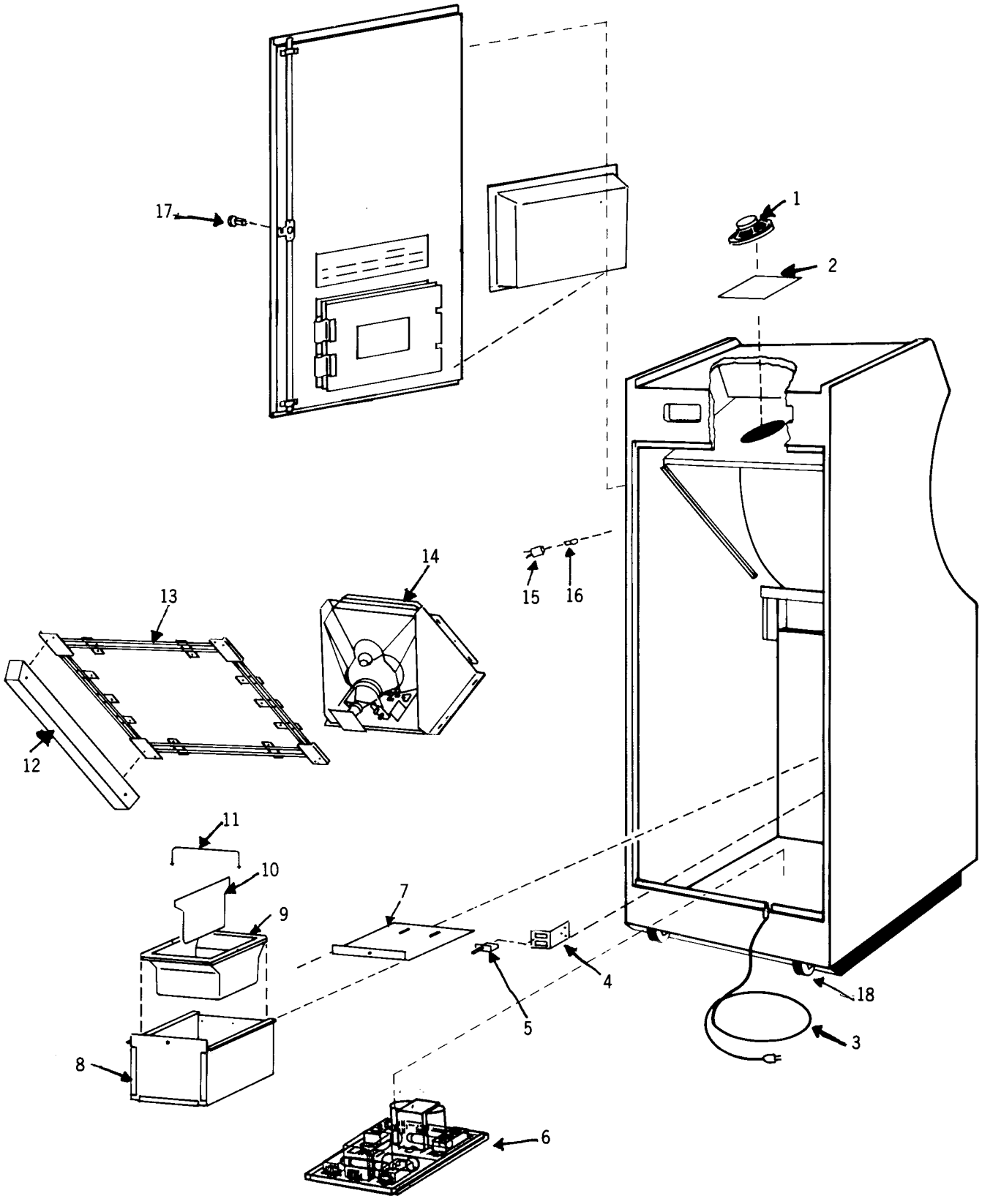

CABINET ASSEMBLY REAR VIEW
FIGURE 15

ITEM	TAITO PART NO.	DESCRIPTION
1	21-00003-001	SPEAKER
2	61B00027-001	SPEAKER GRILL
3	07M00042-001	A/C LINE CORD ASSEMBLY
4	61-00114-001	INTERLOCK BRACKET
*4A	59-00046-001	SWITCH BARRIER
5	29B00015-001	INTERLOCK SWITCH
6	07M00039-001	POWER SUPPLY
7	61C00054-001	CASH BOX LID
8	61D00060-001	CASH BOX
9	63R00010-001	CASH TRAY (ONLY)
10	63-00019-001	CASH TRAY SEPARATOR
11	61B00039-001	CASH TRAY HANDLE
12	42C00013-001	MONITOR SUPPORT CLEAT
13	61D00208-001	MOUNTING BRACKET
14	31-00013-001	19" COLOR MONITOR
15	26-00008-001	SOCKET LAMP CLIP-ON MINI BAY
16	27-00006-001	#47 BULB
17	04-00037-002	LOCK ASSEMBLY
*18	44-00001-001	WHEEL ASSEMBLY
*19	07-00041-001	HEAT SINK ASSEMBLY
*20	08-00007-001	REGULATOR BOARD
*21	18-00003-001	TRANSFORMER

* Item not shown on drawing.

CABINET ASSEMBLY FRONT VIEW
FIGURE 16

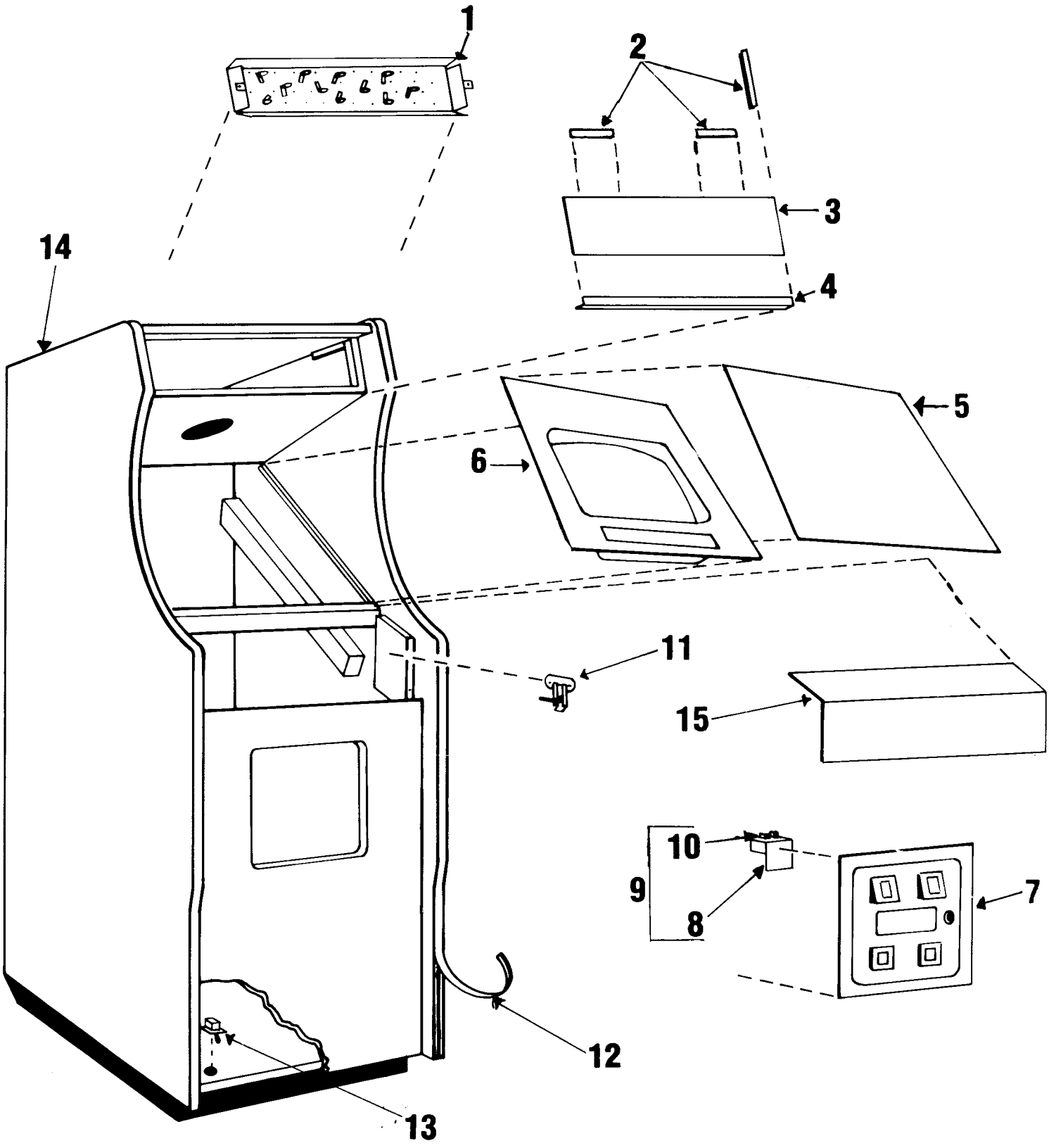

CABINET ASSEMBLY FRONT VIEW

FIGURE 16

ITEM	TAITO PART NUMBER	DESCRIPTION
1	07M00055-002	INCANDESCENT PANEL
2	63B00006-003	"U" CHANNEL BRACKET
3	47-00012-017	MARQUEE
4	61C00115-001	MARQUEE RETAINING BRACKET
5	47-00016-008	COVERGLASS
6	63-00053-001	SHROUD
7	07-00285-001	COIN DOOR
8	61B00113-001	SWITCH BRACKET
9	07-00118-001	SERVICE SWITCH ASSEMBLY
10	29-00022-001	SLIDE, CENTER RETURN SWITCH
11	59-00008-001	LATCHING CLAMP
12	63B00002-004	"T" MOLDING
13	29A00023-001	POWER ON/OFF SWITCH
*	09-00227-001	MAIN HARNESS CABLE
*	09-00043-002	SPEAKER CABLE
14	41-00024-001	FINISHED CABINET
15	07-00281-001	CONTROL PANEL ASSEMBLY

* Item not shown on drawing.

POWER SUPPLY COMPONENT LAYOUT

FIGURE 17

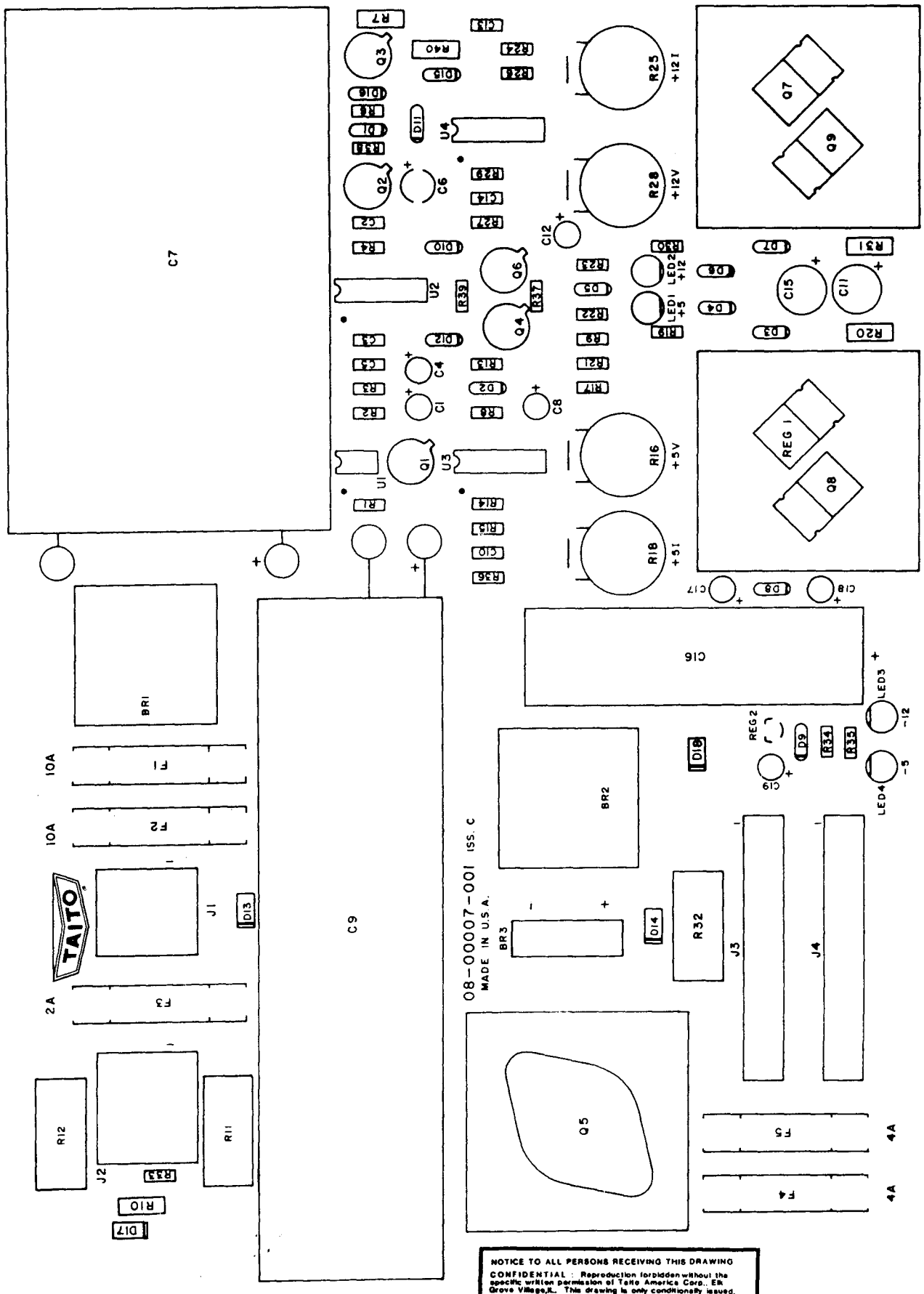

NOTICE TO ALL PERSONS RECEIVING THIS DRAWING

CONFIDENTIAL : Reproduction forbidden without the specific written permission of Taito America Corp., Elk Grove Village,IL. This drawing is only conditionally issued, and neither receipt nor possession thereof confers or transfers any right in , or license to use, the subject matter of the drawing or any design or technical information shown thereon, nor any right to reproduce this drawing or any part thereof. Except for manufacture by vendors of Taito America Corp., and for manufacture under the corporation's written license, no right to reproduce this drawing is granted or the subject matter thereof unless by written agreement with or written permission from the corporation.

REVISIONS

POWER SUPPLY BOARD

FIGURE 17

SYM	TAITO PART NO.	DESCRIPTION
R1	11-00001-102	RES, 1.0K 1/4W 5%
R2	11-00001-512	RES, 5.1K 1/4W 5%
R3	11-00001-183	RES, 18K 1/4W 5%
R4	11-00001-224	RES, 220K 1/4W 5%
R5	11-00001-472	RES, 4.7K 1/4W 5%
R6	11-00001-222	RES, 2.2K 1/4W 5%
R7	11-10001-101	RES, 100 1/4W 5%
R8	11-00001-102	RES, 10K 1/4W 5%
R9	11-00001-472	RES, 4.7K 1/4W 5%
R10	11-10001-101	RES, 100 1/2W 5%
R11	11-30001-015	RES, .15 4W 5%
R12	11-30001-015	RES, .15 4W 5%
R13	11-00001-472	RES, 4.7K 1/4W 5%
R14	11-00001-222	RES, 2.2K 1/4W 5%
R15	11-00001-222	RES, 2.2K 1/4W 5%
R16	11-60001-252	RES, VAR 2.5K 1/4W 20%
R17	11-00001-222	RES, 2.2K 1/4W 5%
R18	11-60001-102	RES, VAR 1.0K 1/4W 20%
R19	11-00001-511	RES, 510 1/4W 5%
R20	11-10001-470	RES, 47 1/2W 5%
R21	11-00001-162	RES, 1.6K 1/4W 5%
R22	11-00001-103	RES, 10K 1/4W 5%
R23	11-00001-472	RES, 4.7K 1/4W 34
R24	11-00001-222	RES, 2.2K 1/4W 5%
R25	11-60001-102	RES, VAR 1.0K 1/4W 5%
R26	11-00001-472	RES, 4.7K 1/4W 5%
R27	11-00001-222	RES, 2.2K 1/4W 5%
R28	11-60001-252	RES, VAR 2.5K 1/4W 20%
R29	11-00001-472	RES, 4.7K 1/4W 5%
R30	11-00001-122	RES, 1.2K 1/4W 5%
R31	11-10001-470	RES, 47 1/4W 5%
R32	11-30001-015	RES, .15 4W 5%
R33	11-00001-222	RES, 2.2K /4W 5%
R34	11-00001-122	RES, 1.2K 1/4W 5%
R35	11-00001-511	RES, 510 1/4W 5%
R36	11-00001-222	RES, 2.2K 1/4W 5%
R37	11-00001-104	RES, 100K 1/4W 5%
R38	11-00001-103	RES, 10K 1/4W 5%
R39	11-00001-224	RES, 220K 1/4W 5%
C1	12-30001-225	CAP, TANT 2.2uf 25V
C2	12-10004-103	CAP, CER .01uf 50V
C3	12-10004-103	CAP, CER .01uf 50V
C4	12-30001-105	CAP, TANT 1uf 35V
C5	12-10001-102	CAP, .001uf 50V
C6	12-30001-106	CAP, TANT 10uf 16V
C7	12-20003-509	CAP, ELECTRO 50,000uf

SYM	TAITO PART NO.	DESCRIPTION
C8	12-30001-105	CAP, TANT 1uf 35V
C9	12-20003-209	CAP, ELECTRO 20,000uf 30V
C10	12-10001-332	CAP, CER .0033uf 50V
C11	12-30001-476	CAP, TANT 47uf 15V
C12	12-30001-105	CAP, TANT 1.uf 35V 50V
C13	12-10004-103	CAP, CER .01uf 50V
C14	12-10001-102	CAP, .001uf 50V
C15	12-30001-476	CAP, TANT 47uf 15V
C16	12-20002-108	CAP, ELECTRO 1,000uf 30V
C17	12-30001-225	CAP, TANT 2.2uf 25V
C18	12-30001-225	CAP, TANT 2.2uf 25V
C19	12-30001-105	CAP, TANT 1uf 35V
F1	24-00003-010	10A FUSE
F2	24-00003-010	10A FUSE
F3	24-00003-003	FUSE, 2A
F4	24-00003-004	FUSE, 4A
F5	24-00003-004	FUSE, 4A
BR1	13-00100-025	DIODE BRIDGE 25A, 100V
BR2	13-00100-012	DIODE BRIDGE 12A, 100V
BR3	13-00100-002	DIODE BRIDGE 2A, 100V
D1	13-14002-001	DIODE IN4002
D2	13-14002-001	DIODE IN4002
D3	13-10752-001	DIODE ZENER IN752
D4	13-14002-001	DIODE IN4002
D5	13-14002-001	DIODE IN4002
D6	13-14002-001	DIODE IN4002
D7	13-10964-001	DIODE ZENER IN964
D8	13-14002-001	DIODE IN4002
D9	13-14002-001	DIODE IN4002
D10	13-14002-001	DIODE IN4002
D11	13-14002-001	DIODE IN4002
D12	13-14002-001	DIODE IN4002
LED1	13-00001-001	LED (RED)
LED2	13-00001-001	LED (RED)
LED3	13-00001-001	LED (RED)
LED4	13-00001-001	LED (RED)
U1	15-62500-001	OPTO COUPLER H11AA2
U2	15-50556-001	TIMER (DUAL) 556
U3	15-50723-001	VOLTAGE REGULATOR 723
U4	15-50723-001	VOLTAGE REGULATOR 723
REG1	15-57912-001	VOLTAGE REGULATOR 7912
REG2	15-57905-001	VOLTAGE REGULATOR 79L05
Q1	14-22905-001	TRANSISTOR 2N2905
Q2	14-22905-001	TRANSISTOR 2N2905
Q3	14-22905-001	TRANSISTOR 2N2905
Q4	14-22905-001	TRANSISTOR 2N2905

POWER SUPPLY BOARD
FIGURE 17

SYM	TAITO PART NO.	DESCRIPTION
Q5	14-23055-001	TRANSISTOR 2N3055
Q6	14-22905-001	TRANSISTOR 2N2905
Q7	14-20030-001	TRANSISTOR TIP-30A
Q8	14-26401-001	SCR 2N6401
Q9	14-26401-001	SCR 2N6401
J1	25-00022-006	CONNECTOR, 6PIN
J2	25-00022-008	CONNECTOR, 8PIN
J3	25-00002-014	CONNECTOR, 14PIN
J4	25-00002-014	CONNECTOR, 14PIN
*	24-10001-001	FUSE CLIPS
*	30-00220-002	HEAT SINK DUAL TO-220
*	30-00003-001	HEAT SINK SINGLE TO-3
*	30-00005-001	HEAT SINK 3" FIN
*	51-02002-010	BOLT
*	54-02002-001	NUT
D13	13-16276-001	TRANSORB IN6276
D14	13-16281-001	TRANSORB IN6281
D17	13-16267-001	TRANSORB IN6267

* Item not shown on drawing.

POWER SUPPLY SCHEMATIC 1 of 1

FIGURE 18

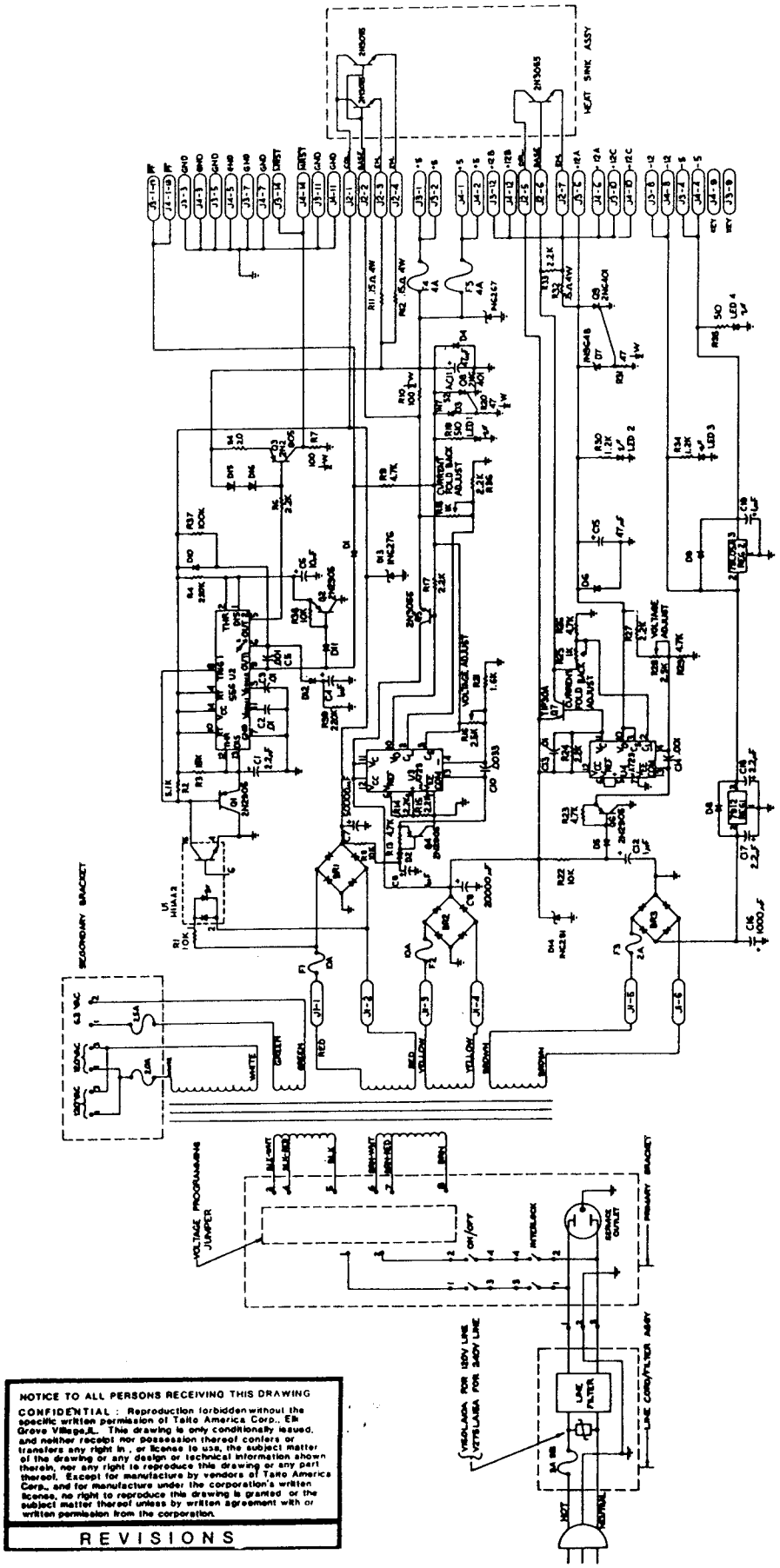

FILTER BOARD
FIGURE 19

ITEM	TAITO PART NO.	DESCRIPTION	QUANITY
1	12-10003-471	CAP, 470PF ± 10% AXIAL LEAD	74
2	17-00001-001	FERRITE BEAD ASSEMBLY	37
3	25-00002-014	CONNECTOR 14P	9
4	25-00002-005	CONNECTOR 5P	2
5	14-23904-001	TRANSISTOR NPN 2N3904	1
6	11-00001-102	RESISTOR 1K OHM 1/4W	1
7	11-00001-332	RESISTOR 3.3 OHM 1/4W	2
8	63B00068-001	STAND OFF	6
9	17-10001-001	10 UH INDUCTOR	5

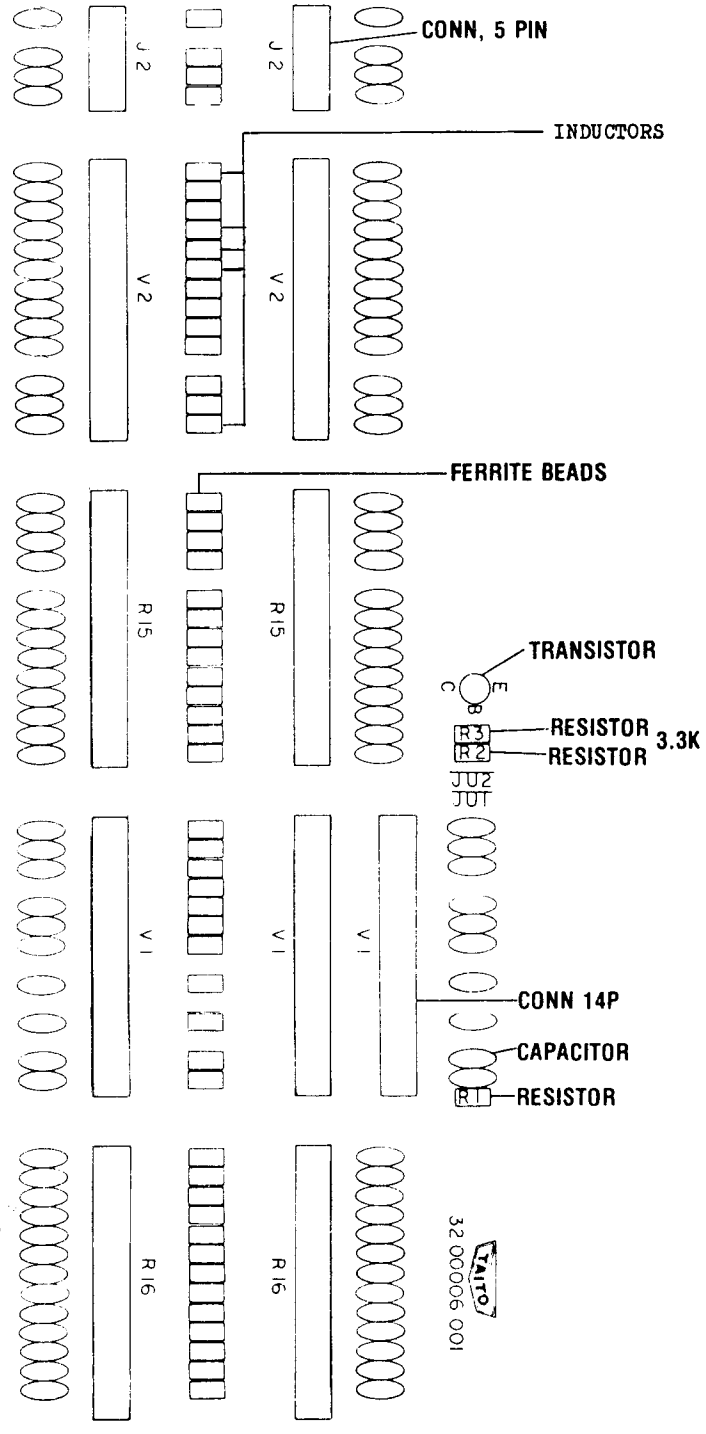

ROM BOARD COMPONENT LAYOUT
(4 BOARD SYSTEM)
FIGURE 20

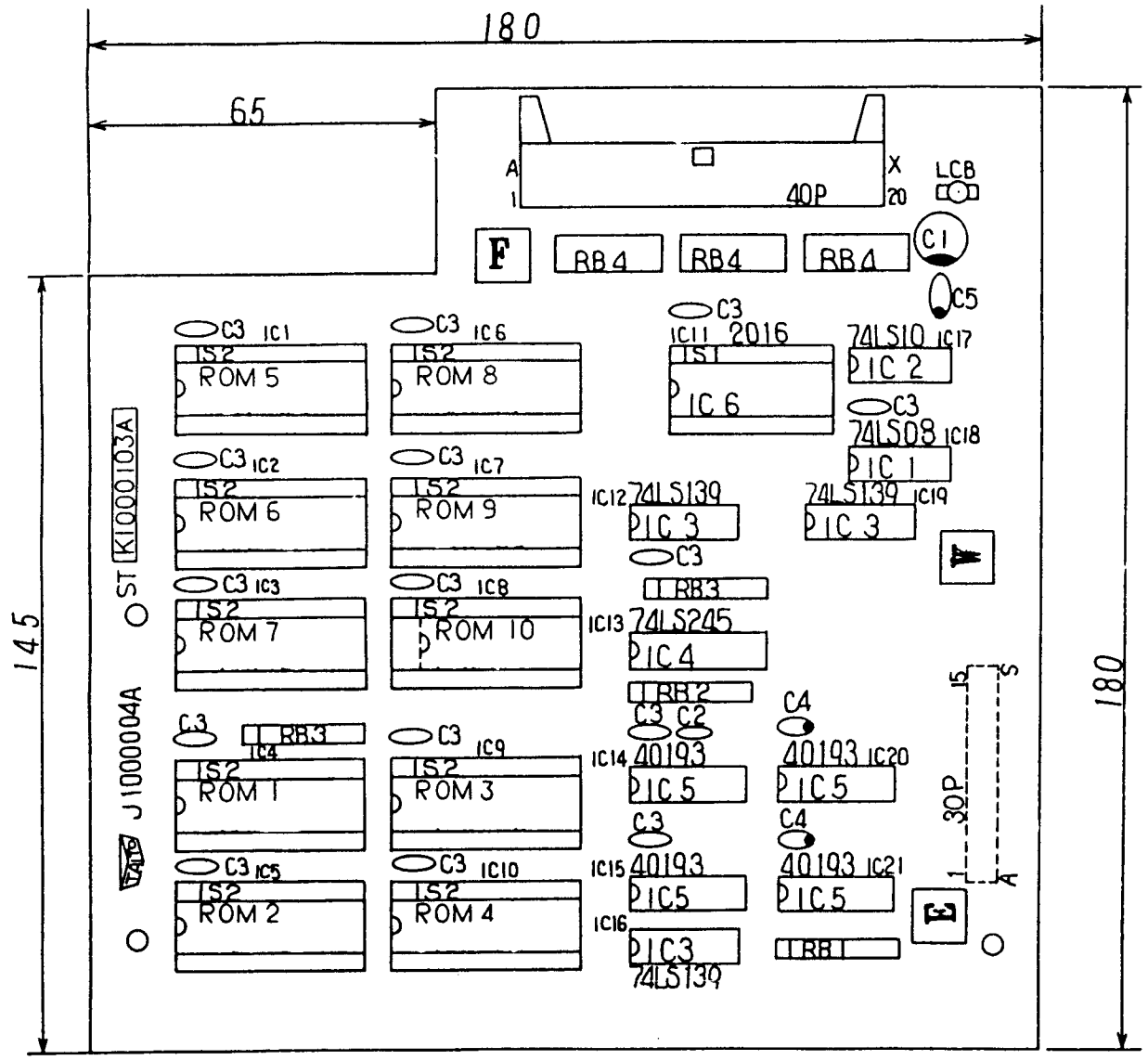

RES BLOCK
COMMON MARK
CATHODE MARK
ELEC BLOCK
TANT DIP
CAP CERAMIC

NOTE 1. SYMBOL MARK

MOUNTING FACE
SOCKET
MOUNT ON SOLDER FACE.

NOTE 2. CONNECTOR SOCKET

NOTICE TO ALL PERSONS RECEIVING THIS DRAWING

CONFIDENTIAL : Reproduction forbidden without the specific written permission of Taito America Corp., Elk Grove Village,IL. This drawing is only conditionally issued, and neither receipt nor possession thereof confers or transfers any right in , or license to use, the subject matter of the drawing or any design or technical information shown thereon, nor any right to reproduce this drawing or any part thereof. Except for manufacture by vendors of Taito America Corp., and for manufacture under the corporation's written license, no right to reproduce this drawing is granted or the subject matter thereof unless by written agreement with or written permission from the corporation.

REVISIONS

ROM BOARD FOUR BOARD SYSTEM
FIGURE 20

ITEM	REF	TAITO PART NO.	DESCRIPTION
1	C1	99-A1000035A	CAP, ELECTRO 220uf 16V
2	C2	99-A1200257A	CAP, CER DISC 330pf 50V
3	C3	99-A1200317A	CAP, CER DISC .1uf 50V
4	C4	99-A1320507A	CAP, TANT 1uf 25V
5	C5	99-A1320519A	CAP, TANT 10uf 25V
6	C6		NOT USED
7	RB1	99-A2231065A	RES SIP 1K
8	RB2	99-A2231081A	RES SIP 4.7K
9	RB3	99-A2231089A	RES SIP 10K
10	RB4	99-B2239002A	RES ARRAY 100 1/4W 5%
11	IC1	15-20008-001	74LS08
12	IC2	15-20010-001	74LS10
13	IC3	15-20139-001	74LS139
14	IC4	15-20245-001	74LS245
15	IC5	99-B07N0193A	C-MOS 40193
16	IC6	99-B10F0019A	S-RAM 2016 C,D,F,G
17	ROM1	16-00032-005	BA3-05
18	ROM2	16-00032-006	BA3-06
19	ROM3	16-00032-007	BA3-07
20	ROM4	16-00032-008	BA3-08
21	ROM5	16-00032-001	BA3-01
22	ROM6	16-00032-002	BA3-02
23	ROM7	16-00032-003	BA3-03
24	ROM8	16-00032-004	BA3-04
25	ROM9		NOT USED
26	ROM10		NOT USED
27	40P	25-0001-101	CONNECTOR 40P
28	30P	99-C0510552A	CONNECTOR SOCKET 30P
29	IS1	26-0001-024	IC SOCKET 24P
30	IS2	26-0001-028	IC SOCKET 28P
31	LCB	99-F9000439A	CBSS-10N SPACER
32		99-L5000001A	40 PIN RIBBON CABLE

ROM PC BOARD SCHEMATIC 1 of 1
(4 BOARD SYSTEM)
FIGURE 20

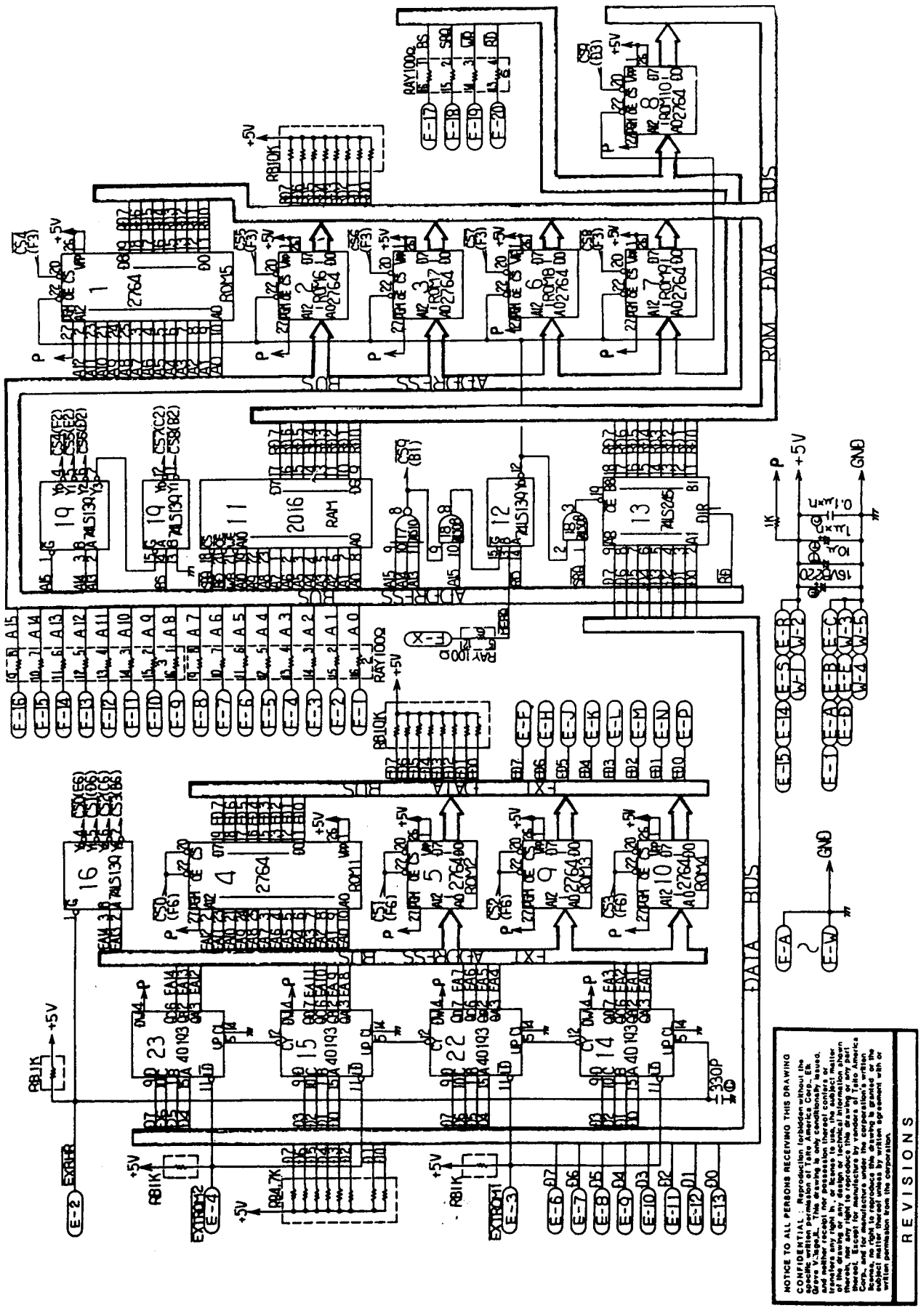

NOTICE TO ALL PERSONS RECEIVING THIS DRAWING
CONFIDENTIAL - Reproduction forbidden without the specific written permission of Taito America Corp., Elk Grove Village, IL. This drawing is only conditionally issued, and neither receipt nor possession thereof confers or transfers any right in, or license to use, the subject matter thereof, nor any right to reproduce this drawing or any part thereof. Except for manufacture by vendors of Taito America Corp., and for manufacture under the corporation's written license, no right is granted to make any use whatsoever of the subject matter thereof unless by written agreement with or written permission from the corporation.

ROM BOARD COMPONENT LAYOUT
(5 BOARD SYSTEM)
FIGURE 21

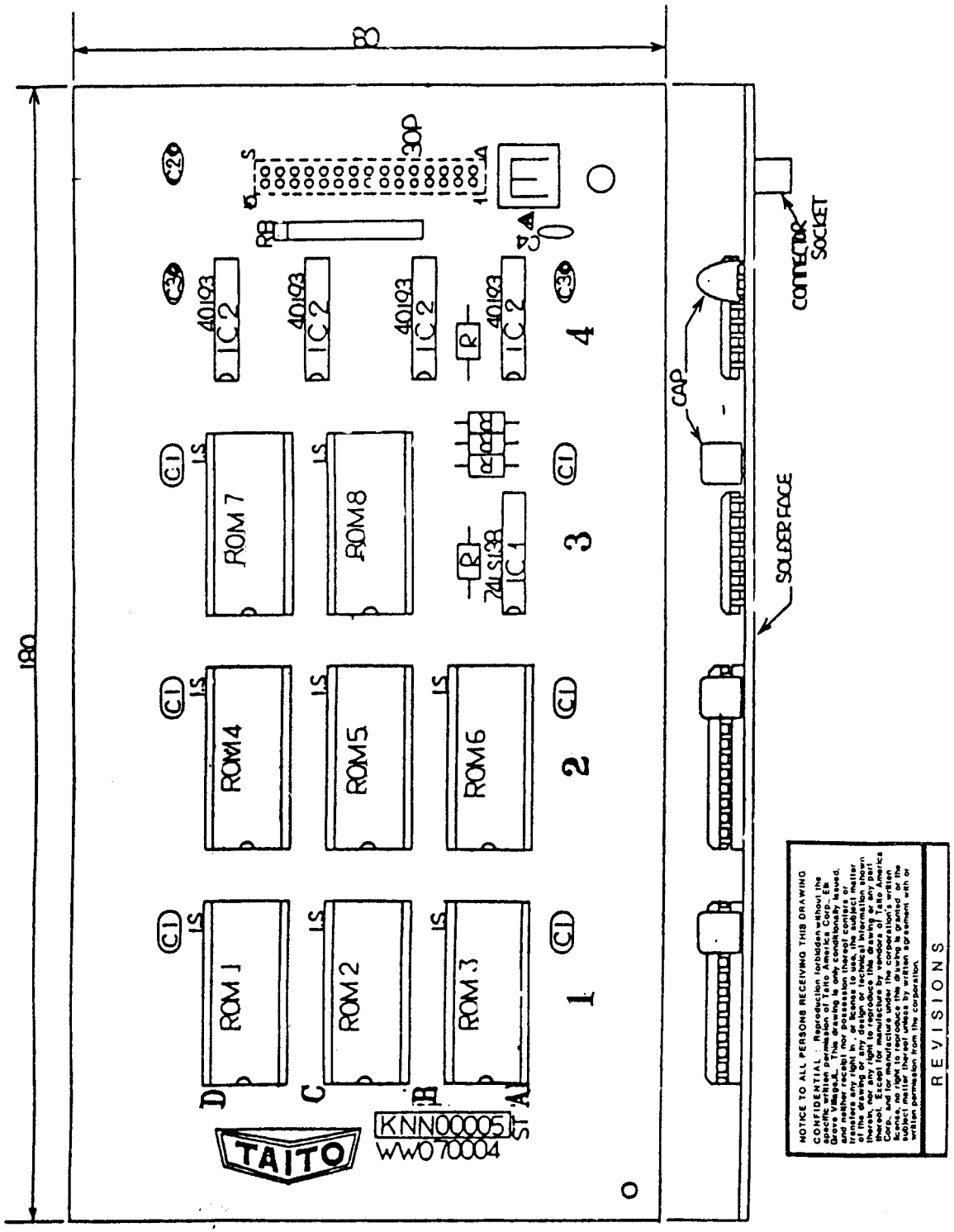

NOTICE TO ALL PERSONS RECEIVING THIS DRAWING
CONFIDENTIAL: Reproduction forbidden without the specific written permission of Taito America Corp. 26 Gove Village, IL. This drawing is only conditionally issued, and neither receipt nor possession thereof confers or transfers any right in, or license to use, the subject matter of this drawing, or any design or technical information shown thereon, nor any right to reproduce this drawing or any part thereof. Except for manufacture by vendors of Taito America Corp. and for manufacture under the corporation's written license, no right is granted to make, have made, sell or use the subject matter thereof unless by written agreement with or written permission from the corporation.

ROM BOARD FIVE BOARD SYSTEM
FIGURE 21

ITEM	SYM	TAITO PART NO.	DESCRIPTION
1		99-AA001711	ROM PC BOARD
2	30P	99-AA055161	CONNECTOR SOCKET HKP-30FD
3	1S	26-00001-024	IC SOCKET 24P
4	IC1	15-20138-001	74LS138
5	IC2	99-B07X0193	CMOS 40193
6	ROM1	16-00032-020	EPROM BA3-20
7	ROM2	16-00032-021	EPROM BA3-21
8	ROM3	16-00032-022	EPROM BA3-22
9	ROM4	16-00032-023	EPROM BA3-23
10	ROM5	16-00032-024	EPROM BA3-24
11	ROM6	16-00032-025	EPROM BA3-25
12	ROM7	16-00032-026	EPROM BA3-26
13	ROM8	16-00032-027	EPROM BA3-27
14	C1	99-A1100170A	CAP, FILM .1uf 1H104
15	C2	99-A1320519A	CAP, TANT 10uf 25V
16	C3	99-A1320607A	CAP, TANT 1uf 35V
17	R	11-00001-102	RES, 1K OHM 1/4W 5%
18	RB	99-A2231081A	RESISTOR BLOCK 4.7K
19	C4	99-A1200251A	CAP, CER. 180pf 50V

ROM PC BOARD SCHEMATIC 1 of 1
(5 BOARD SYSTEM)
FIGURE 21

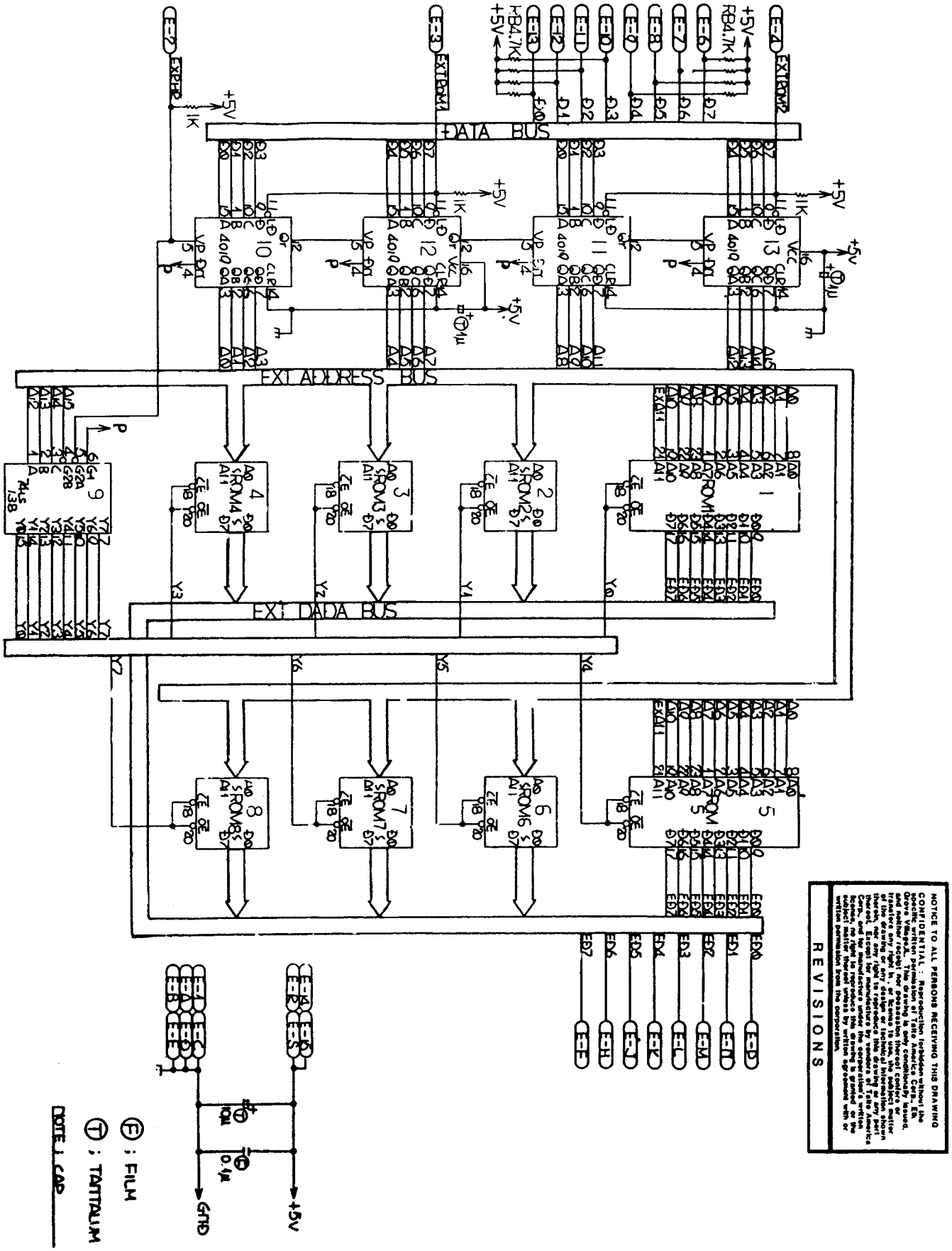

GAME BOARD COMPONENT LAYOUT
(4 and 5 BOARD SYSTEMS)
FIGURE 22

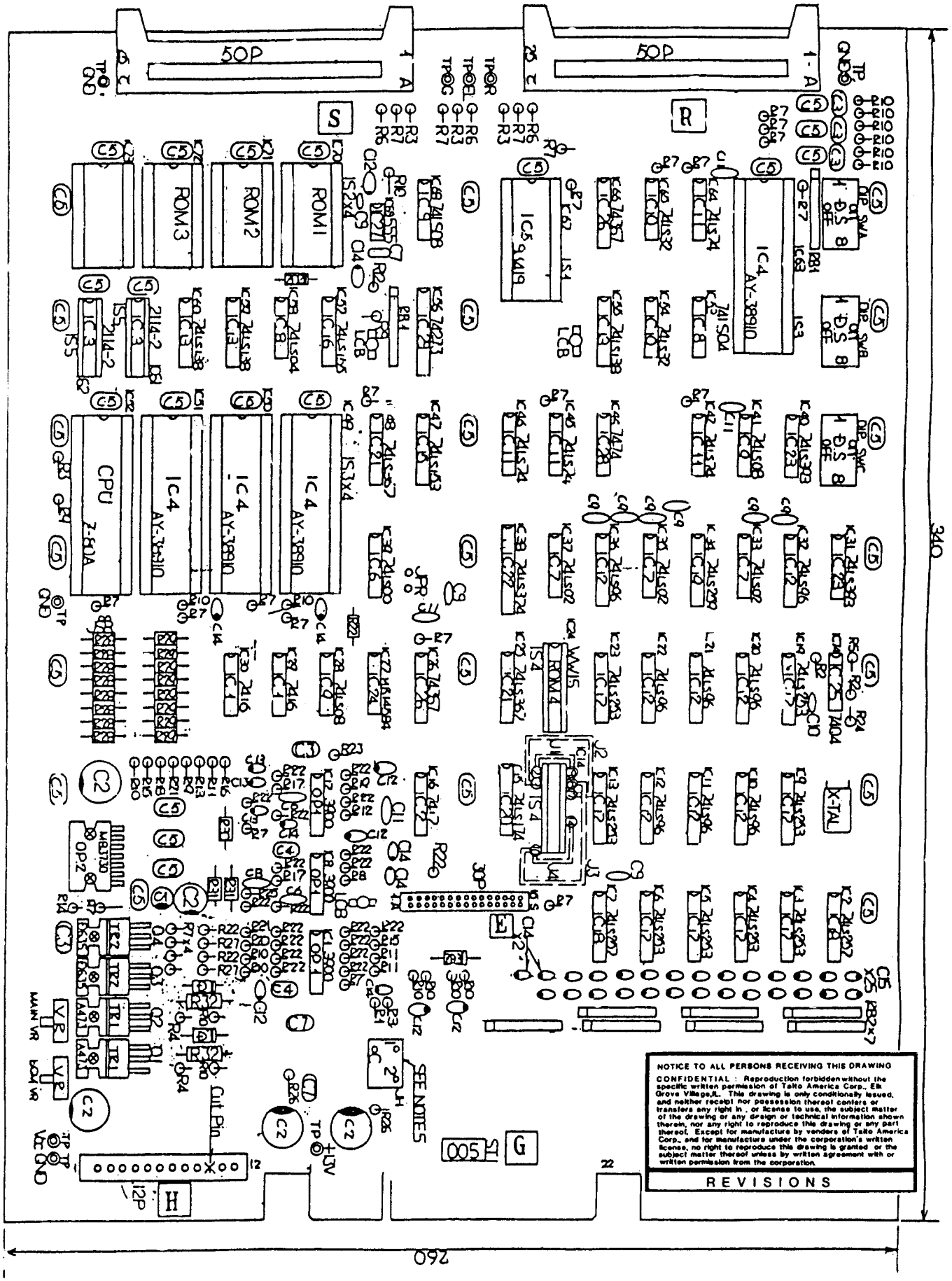

GAME BOARD FOUR AND FIVE BOARD SYSTEMS
FIGURE 22

ITEM	SYM	TAITO PART NO.	DESCRIPTION
1		99-AA017808	GAME PCB
2	IS5	26-00001-018	IC SOCKET 18P
3	DS	29-00001-008	DIP SWITCH 8 P
4	12P	99-C0500011A	CONNECTOR 12 PIN
5	30P	99-C050551A	CONNECTOR 30 PIN
6	IS1	26-00001-028	IC SOCKET 28P
7	50P	25-00001-101	CONNECTOR RT. ANG. 50 P
8	IS2	26-00001-024	IC SOCKET 24P
9	IS3	26-00001-040	IC SOCKET 40P
10	IS4	26-00001-020	IC SOCKET 20P
11	TP	99-C0600403A	TEST POINT
12	ICB		STAND-OFF
13	TR1	99-A0100012A	TRANSISTOR 25A423
14	TR7	99-A0100143A	TRANSISTOR 25D635
15	OP1	15-53900-001	LM3900
16	OP2	99-B17Z0333A	POWER AMP MB3730
17	IC1	15-30016-001	7416
18	IC2	15-30017-001	7417
19	IC3	15-10003-001	RAM 2114-2
20	IC4	15-60006-001	SOUND IC AY-8910
21	IC5	99-B11J0002A	TTL RAM 93410
22	IC6	15-20000-001	74LS00
23	IC7	15-20002-001	74LS02
24	IC8	15-20004-001	74LS04
25	IC9	15-20008-001	74LS08
26	IC10	99-B01A0032A	74LS32 (TI ONLY)
27	IC11	15-20074-001	74LS74
28	IC12	15-20096-001	74LS96
29	IC14		NOT USED
30	IC13	15-20138-001	74LS138
31	IC15	15-20153-001	74LS153
32	IC16	15-20155-001	74LS155
33	IC17	15-20253-001	74LS253
34	IC18	15-20257-001	74LS257
35	IC19	15-20259-001	74LS259
36	IC20	15-20174-001	74LS174
37	IC21	15-20367-001	74LS367
38	IC22	15-20374-001	74LS374
39	IC23	15-20393-001	74LS393
40	IC24	99-B07C0584A	CMOS MB14584
41	IC25	15-30004-001	7404
42	IC26	15-30367-001	74367
43	IC27	15-50555-001	Timer 555
44	IC28	15-30074-001	7474
45	IC29	15-30273-001	74273
46	CPU	15-00015-001	CPU Z-80A

GAME BOARD FOUR AND FIVE BOARD SYSTEMS
FIGURE 22

ITEM	SYM	TAITO PART NO.	DESCRIPTION
47	C1	99-A1000123A	CAP, ELECTRO 22uf 16V
48	C2	99-A1000135A	CAP, ELECTRO 220uf 16V
49	C3	99-A1100147A	CAP, FILM .01uf 50V
50	C4	99-A1100197A	CAP, FILM .2uf 50V
51	C5	99-A1100170A	CAP, FILM .1uf 50V
52	C6	99-A1200237A	CAP, CER DISC 47pf 50V
53	C7	99-A1100162A	CAP, FILM .047uf 50V
54	C8	99-A1200249A	CAP, CER DISC 150pf 50V
55	C9	99-A1005825A	CAP, CER DISC 180pf 50V
56	C10	99-A1200229A	CAP, CER DISC 22pf 50V
57	C11	99-A1200261A	CAP, CER DISC 470pf 50V
58	C12	99-A1320519A	CAP, TANT. 10uf 25V
59	C13	99-A1320601A	CAP, TANT. .1uf 35V
60	C14	99-A1320607A	CAP, TANT. 1uf 35V
61	C15	99-A1320611A	CAP, TANT. 2.2uf 35V
62	R1	11-00001-101	RES, 100 ohm 1/2W 5%
63	R2	11-00001-221	RES, 220 ohm 1/4W 5%
64	R3	11-00001-271	RES, 270 ohm 1/4W 5%
65	R4	11-00001-331	RES, 330 ohm 1/4W 5%
66	R5	11-00001-561	RES, 560 ohm 1/4W 5%
67	R6	11-00001-471	RES, 470 ohm 1/4W 5%
68	R7	11-00001-102	RES, 1K 1/4W 5%
69	R8	11-00001-392	RES, 3.9K 1/4W 5%
70	R9	11-00001-472	RES, 4.7K 1/4W 5%
71	R10	11-00001-103	RES, 10K 1/4W 5%
72	R11	11-00001-203	RES, 20K 1/4W 5%
73	R12	11-00001-223	RES, 22K 1/4W 5%
74	R13	11-00001-393	RES, 39K 1/4W 5%
75	R14	11-00001-272	RES, 2.7K 1/4W 5%
76	R15	11-00001-823	RES, 82K 1/4W 5%
77	R16	11-00001-154	RES, 150K 1/4W 5%
78	R17	11-00001-274	RES, 270K 1/4W 5%
79	R18	11-00001-334	RES, 330K 1/4W 5%
80	R19	11-00001-394	RES, 390K 1/4W 5%
81	R20	11-00001-474	RES, 470K 1/4W 5%
82	R21	11-00001-684	RES, 680K 1/4W 5%
83	R22	11-00001-105	RES, 1M 1/4W 5%
84	R23	11-00001-470	RES, 47 ohm 1/4W 5%
85	R24	11-00001-182	RES, 1.8K 1/4W 5%
86	R25	11-00001-225	RES, 2.2M 1/4W 5%
87	R26	11-00001-275	RES, 2.7M 1/2W 5%
88	R27	11-00001-202	RES, 2K 1/4W 5%
89	R28	99-A2002361A	RES, 15K 1/4W 1%
90	R29	99-A2002395A	RES, 30K 1/4W 1%
91	R31	11-10001-010	RES, 1 ohm 1/2W 5%
92	R32	99-A2251669A	RES, WW 6 ohm 2W 10%

ITEM	SYM	TAITO PART NO.	DESCRIPTION
93	VR	99-A2102509A	VARIABLE RESISTOR 50K
94	RB1	99-A2231065A	RESISTOR SIP 1K
95	RB2	99-A2231090A	RESISTOR SIP 100/10K
96	RRC		RES,CAP SIP 100/10K/2.2uf
97	ZD1		NOT USED
98	ZD2	99-A0210034A	ZENER DIODE 2.7V
99	ZD3	99-A0210045A	ZENER DIODE 9V
100	ROM1	16-00032-009	EPROM BA3-09
101	ROM2	16-00032-010	EPROM BA3-10
102	ROM3		NOT USED
103	ROM4		NOT USED
104	X-TAL	99-A9000066A	X-TAL 6MHz

GAME PC BOARD SCHEMATIC 1 of 7

FIGURE 22

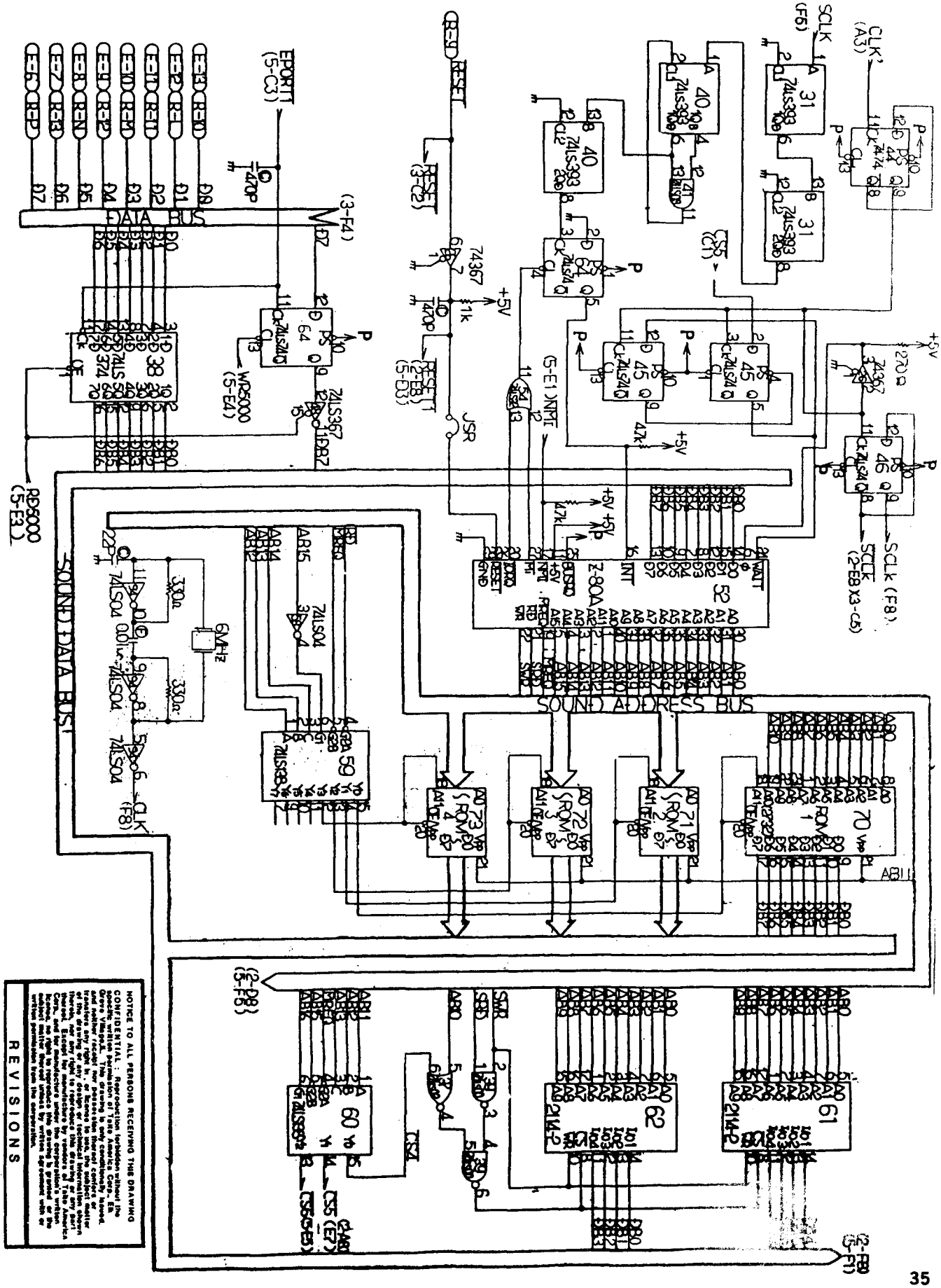

GAME PC BOARD SCHEMATIC 2 of 7

FIGURE 22

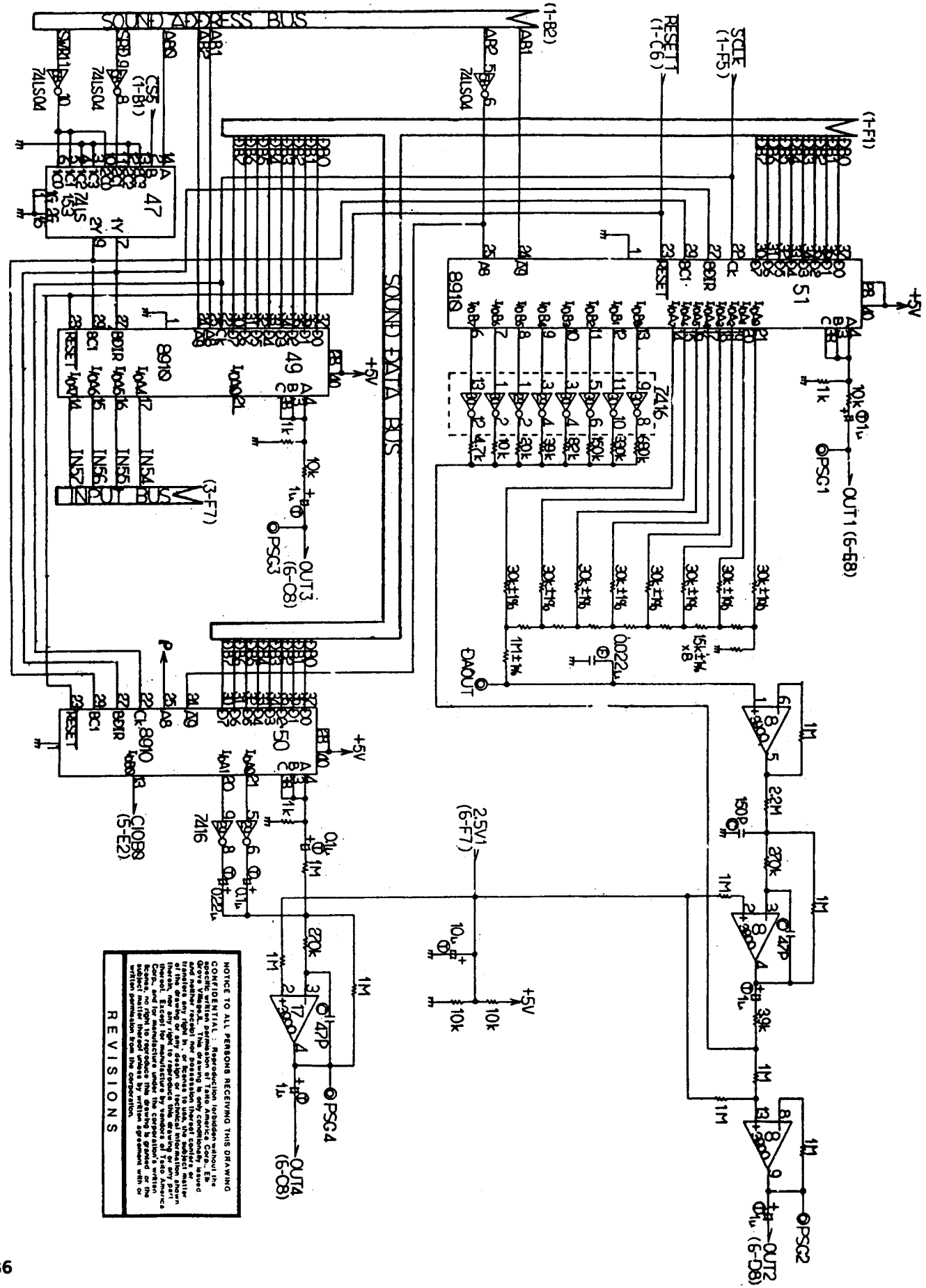

GAME PC BOARD SCHEMATIC 3 of 7
FIGURE 22

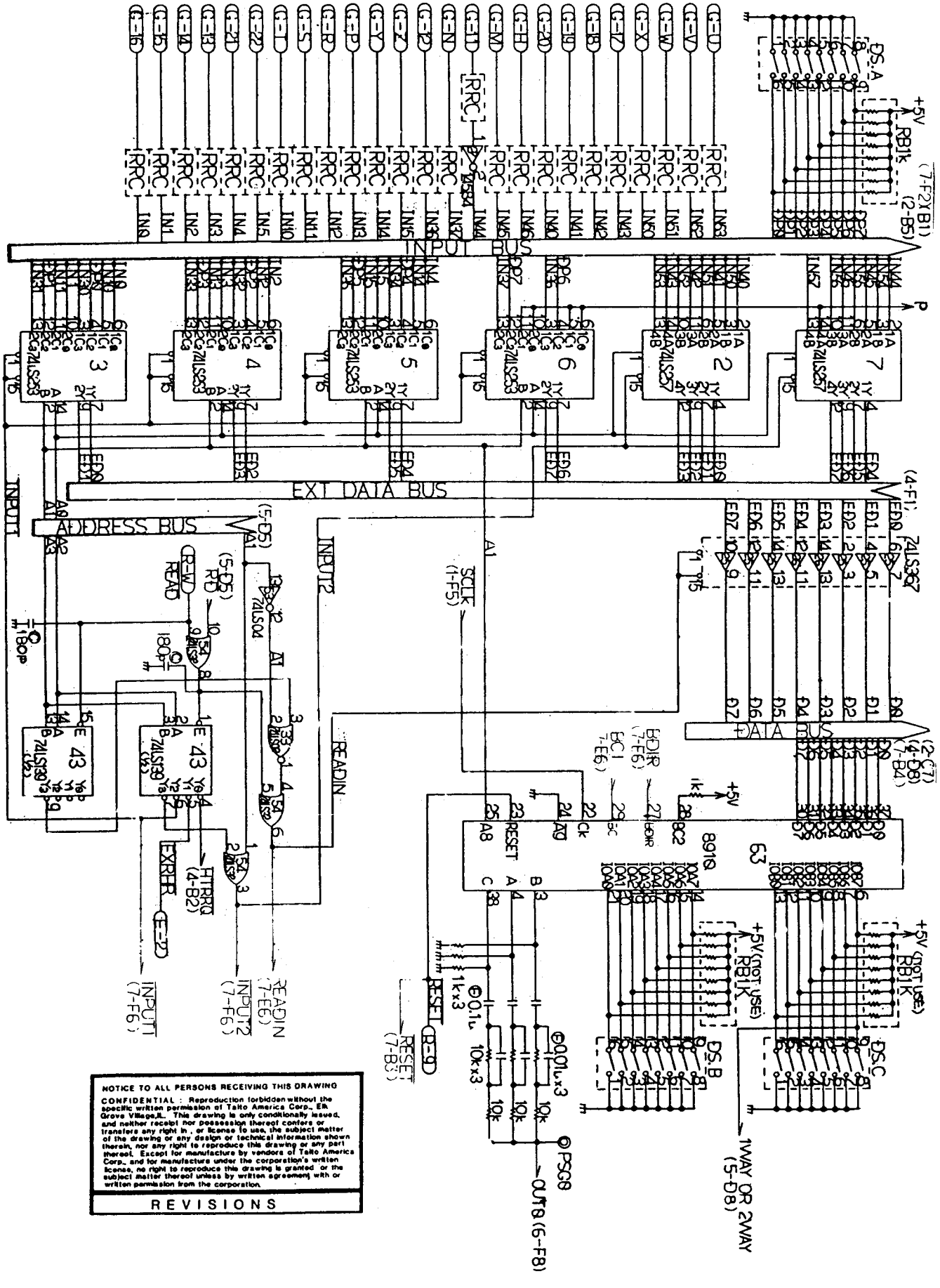

NOTICE TO ALL PERSONS RECEIVING THIS DRAWING

CONFIDENTIAL : Reproduction forbidden without the specific written permission of Taito America Corp., Elk Grove Village,IL. This drawing is only conditionally issued, and neither receipt nor possession thereof confers or transfers any right in , or license to use, the subject matter of the drawing or any design or technical information shown therein, nor any right to reproduce this drawing or any part thereof. Except for manufacture by vendors of Taito America Corp., and for manufacture under the corporation's written license, no right to reproduce this drawing is granted or the subject matter thereof unless by written agreement with or written permission from the corporation.

REVISIONS

GAME PC BOARD SCHEMATIC 4 of 7

FIGURE 22

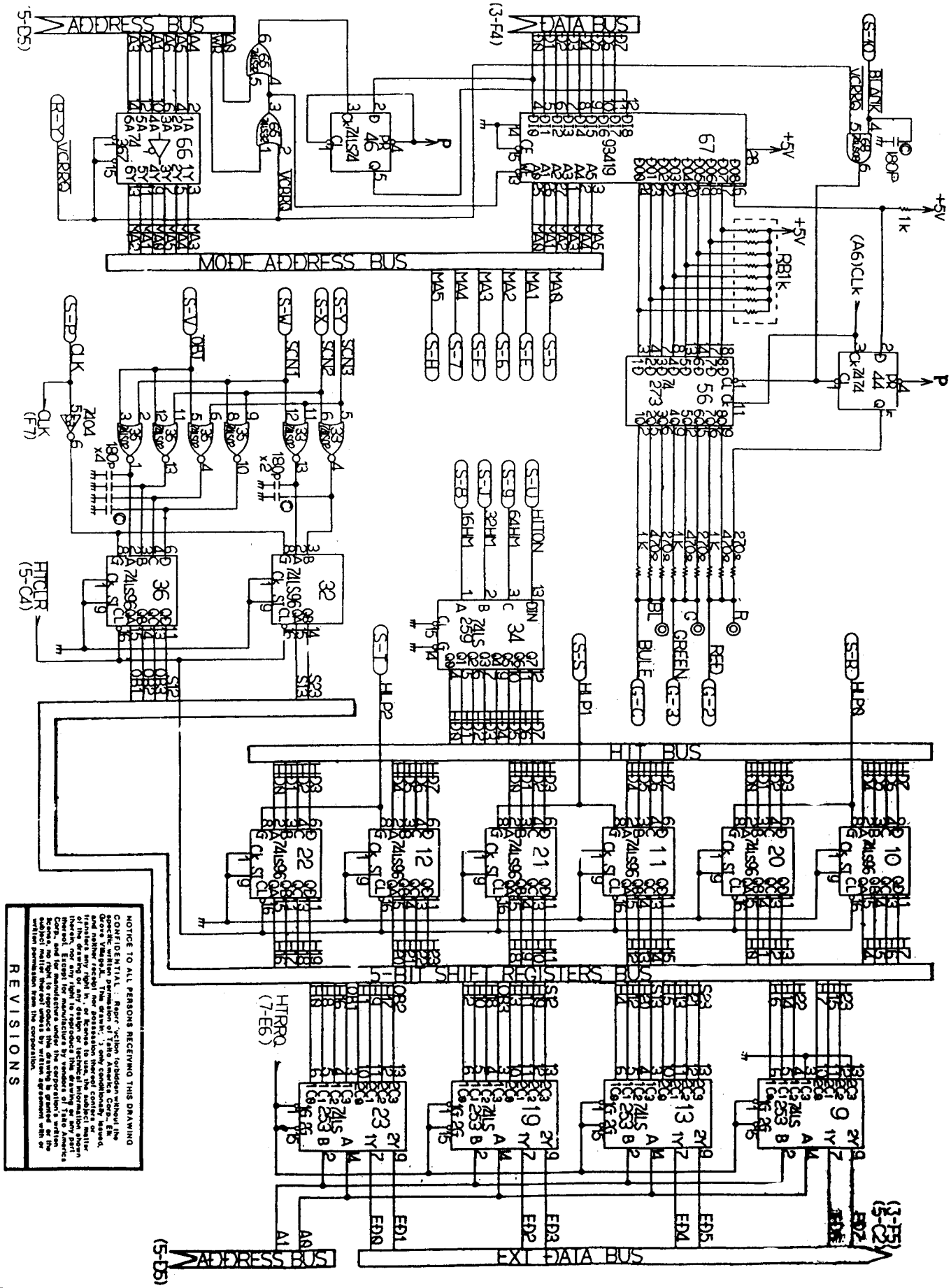

GAME PC BOARD SCHEMATIC 5 of 7

FIGURE 22

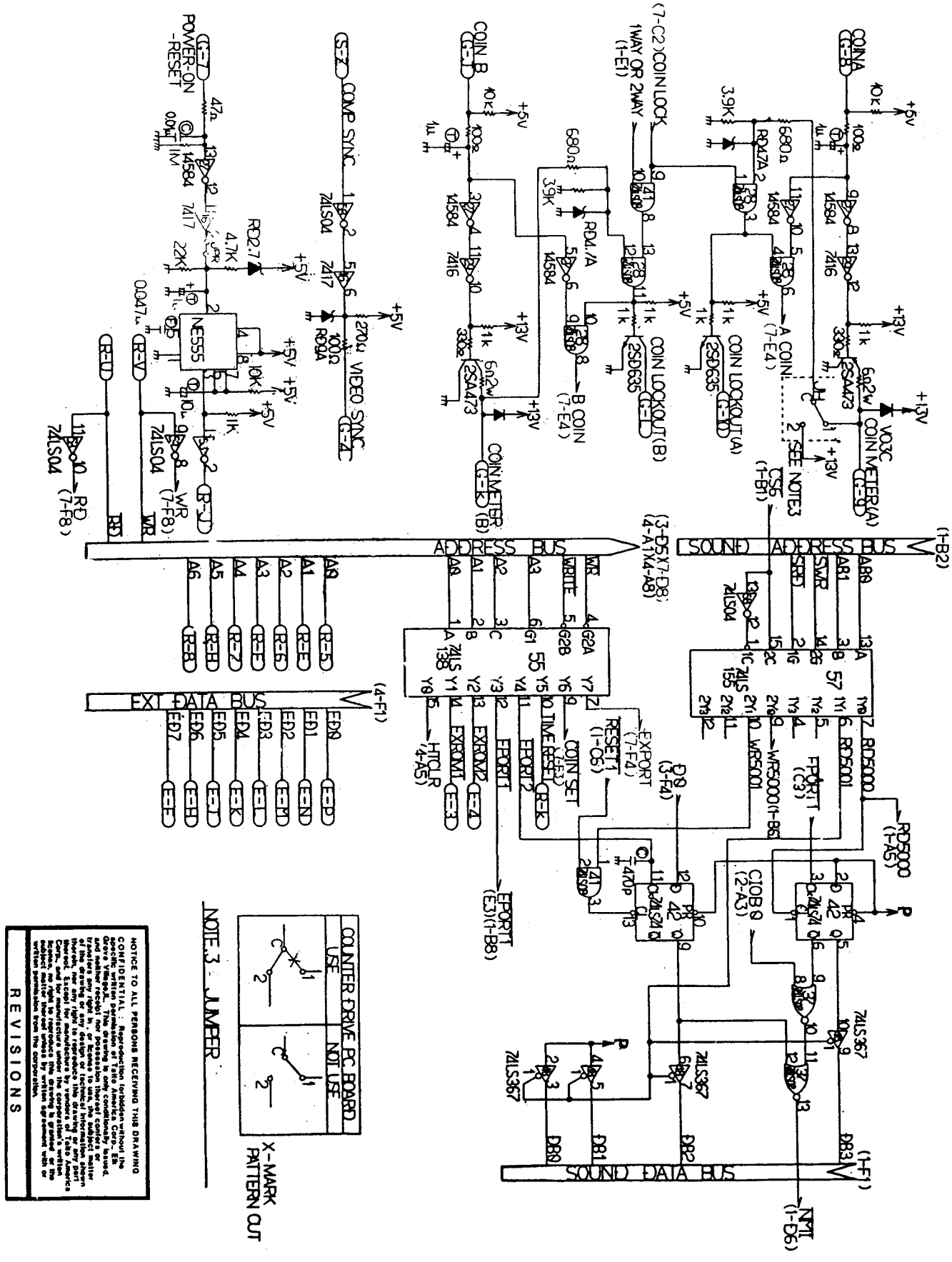

NOTICE TO ALL PERSONS RECEIVING THIS DRAWING

CONFIDENTIAL ... Reproduction forbidden without the written consent of Taito America Corporation. This drawing is only conditionally issued, and neither receipt nor possession thereof confers or transfers any right in, or license to use, the subject matter of this drawing or any design or technical information shown thereon. Except for manufacture by vendors of Taito America Corp., and for manufacture under the corporation's written license, no right to reproduce this drawing is granted or the subject matter thereof used without the written permission from the corporation.

REVISIONS

GAME PC BOARD SCHEMATIC 6 of 7

FIGURE 22

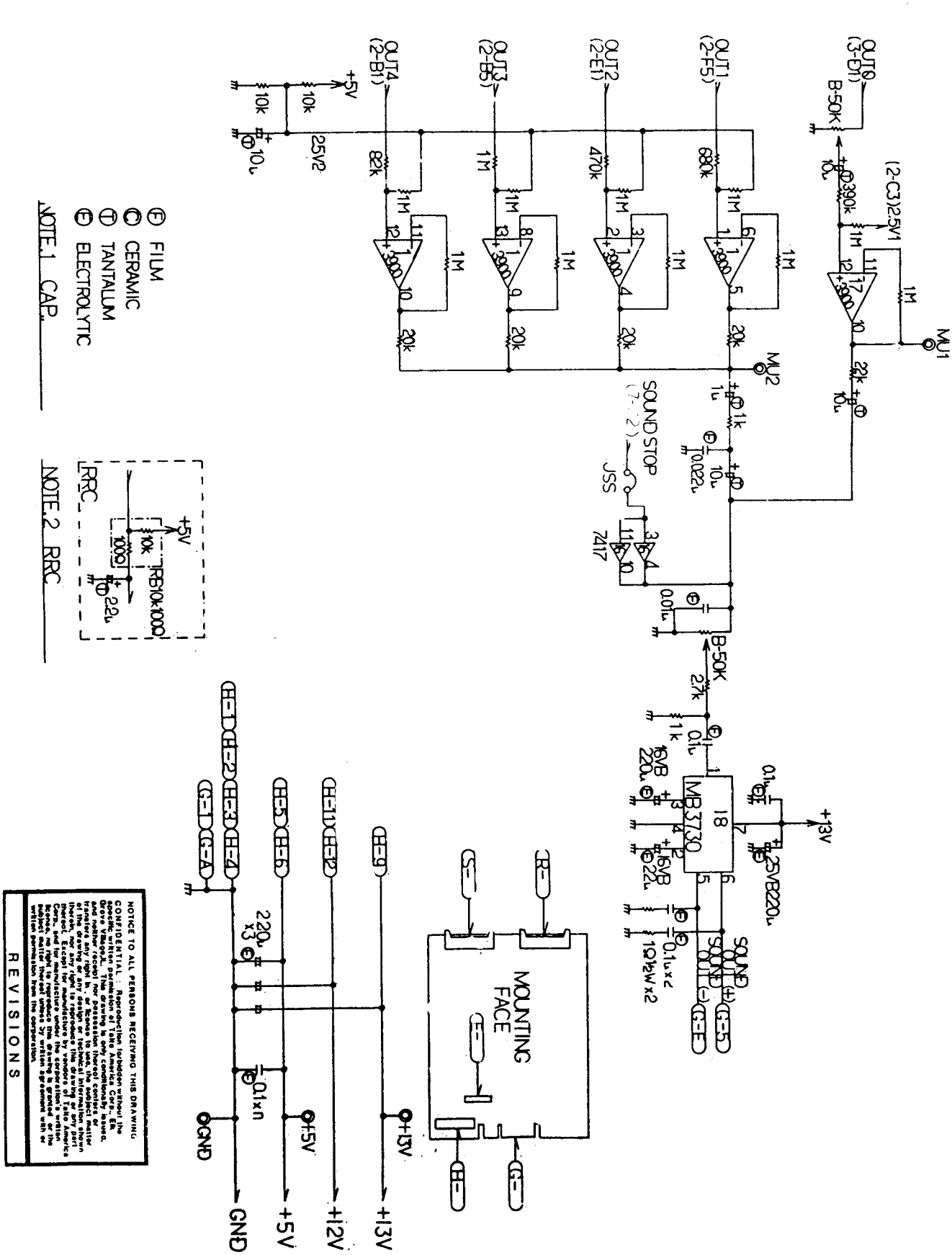

GAME PC BOARD SCHEMATIC 7 of 7

FIGURE 22

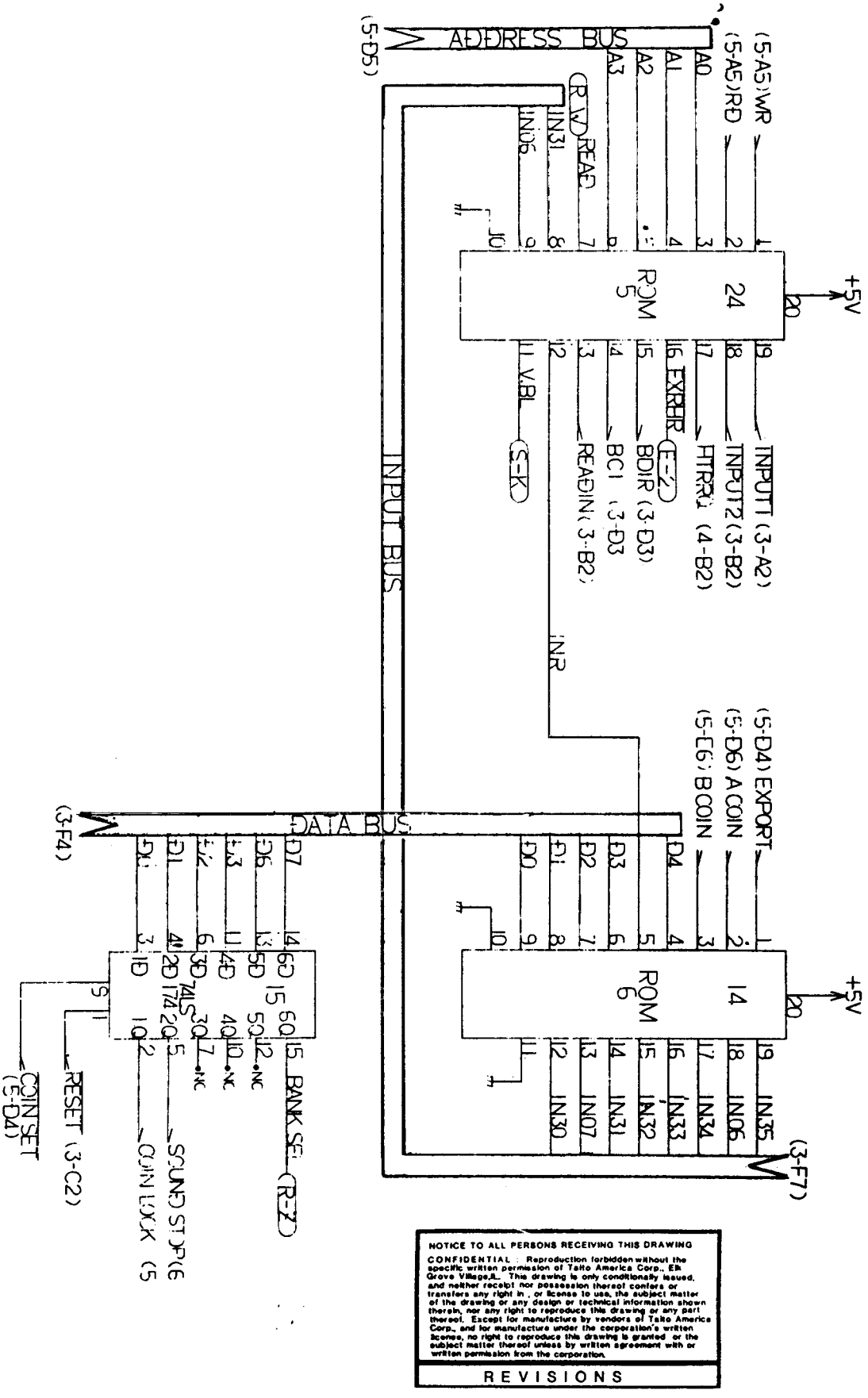

NOTICE TO ALL PERSONS RECEIVING THIS DRAWING

CONFIDENTIAL : Reproduction forbidden without the specific written permission of Taito America Corp., Elk Grove Village,IL. This drawing is only conditionally issued, and neither receipt nor possession thereof confers or transfers any right in , or license to use, the subject matter of the drawing or any design or technical information shown therein, nor any right to reproduce this drawing or any part thereof. Except for manufacture by vendors of Taito America Corp., and for manufacture under the corporation's written license, no right to reproduce this drawing is granted or the subject matter thereof unless by written agreement with or written permission from the corporation.

REVISIONS

VIDEO BOARD COMPONENT LAYOUT
(4 and 5 BOARD SYSTEMS)
FIGURE 23

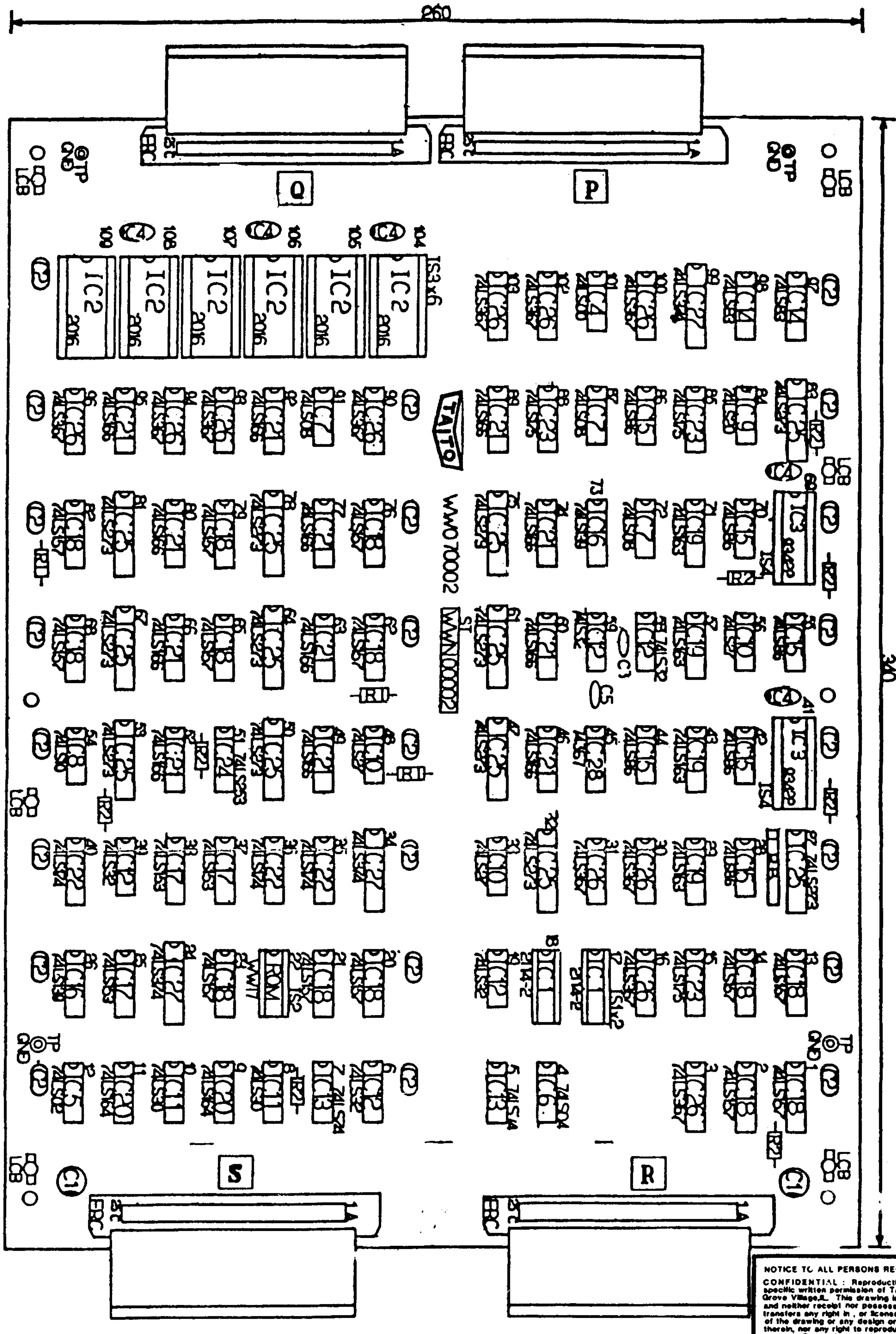

NOTICE TO ALL PERSONS RECEIVING THIS DRAWING

CONFIDENTIAL : Reproduction forbidden without the specific written permission of Taito America Corp., Elk Grove Village,IL. This drawing is only conditionally issued, and neither receipt nor possession thereof confers or transfers any right in , or license to use, the subject matter of the drawing or any design or technical information shown therein, nor any right to reproduce this drawing or any part thereof. Except for manufacture by venders of Taito America Corp., and for manufacture under the corporation's written license, no right to reproduce this drawing is granted or the subject matter thereof unless by written agreement with or written permission from the corporation.

VIDEO BOARD FOUR AND FIVE BOARD SYSTEMS

FIGURE 23

ITEM	REF	TAITO PART NO.	DESCRIPTION
1	C1	99-A1000135A	CAP, ELECTRO 220uf 16V
2	C2	99-A1200245A	CAP, CER DISC 100pf 50V
3	C3	99-A1200251A	CAP, CER DISC 180pf 50V
4	C4	99-A1200317A	CAP, CER DISC .1uf 50V
5	C5	99-A1320607A	CAP, TANT 1uf 25V
6	R1	11-00001-101	RES, 100 ohm 1/4W 5%
7	R2	11-00001-471	RES, 470 ohm 1/4W 5%
8	R3	11-00001-102	RES, 1K 1/4W 5%
9	IC1	15-20000-001	74LS00
10	IC2	15-20002-001	74LS02
11	IC3	15-20004-001	74LS04
12	IC4	15-20008-001	74LS08
13	IC5	15-20010-001	74LS10
14	IC6	15-20020-001	74LS20
15	IC7	15-20027-001	74LS27
16	IC8	15-20030-001	74LS30
17	IC9	15-20032-001	74LS32
18	IC10	15-70074-001	74S74
19	IC11	15-20083-001	74LS83
20	IC12	15-20086-001	74LS86
21	IC13	15-20139-001	74LS139
22	IC14	15-20153-001	74LS153
23	IC15	15-20157-001	74LS157
24	IC16	15-20163-001	74LS163
25	IC17	15-20164-001	74LS164
26	IC18	15-20166-001	74LS166
27	IC19	15-20174-001	74LS174
28	IC20	15-20175-001	74LS175
29	IC21	15-20253-001	74LS253
30	IC22	15-20273-001	74LS273
31	IC23	15-20367-001	74LS367
32	IC24	99-B01N0374A	74LS374 A,B,C
33	IC25	15-20074-001	74LS74
34	IC26	15-30367-001	74367
35	IC27	15-10003-001	RAM 2114-2
36	IC28	99-B10F0019A	RAM 2016 C,D,F,G
37	IC29	99-B11J0006A	RAM 93422
38	ROM	16-00020-001	ROM EB16
39	IS1	26-00001-016	IC SOCKET 16P
40	IS2	26-00001-022	IC SOCKET 22P
41	IS3	26-00001-024	IC SOCKET 24P
42	TP	99-C0600403A	TEST POINT

VIDEO PC BOARD SCHEMATIC 1 0f 5

FIGURE 23

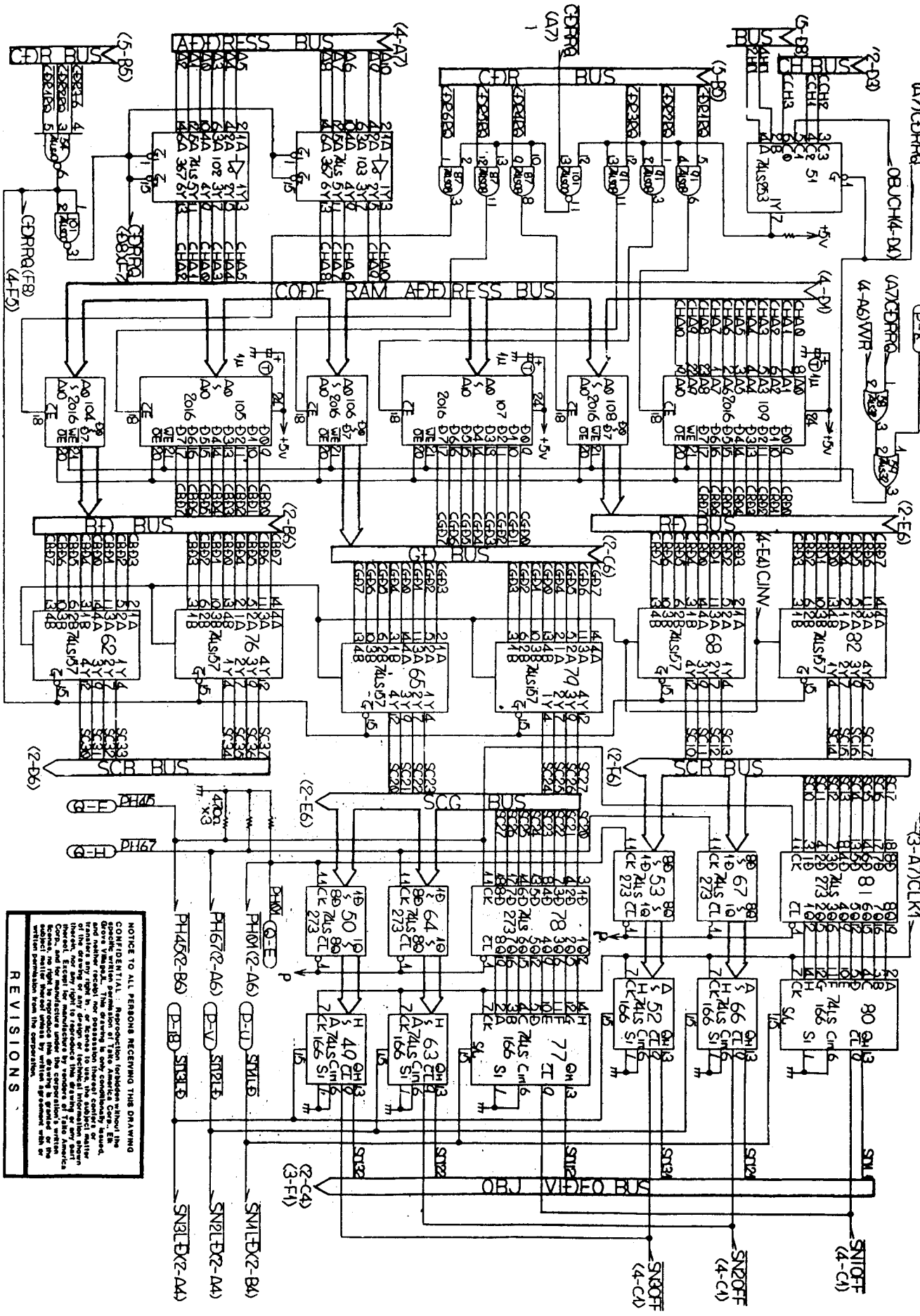

VIDEO PC BOARD SCHEMATIC 2 Of 5

FIGURE 23

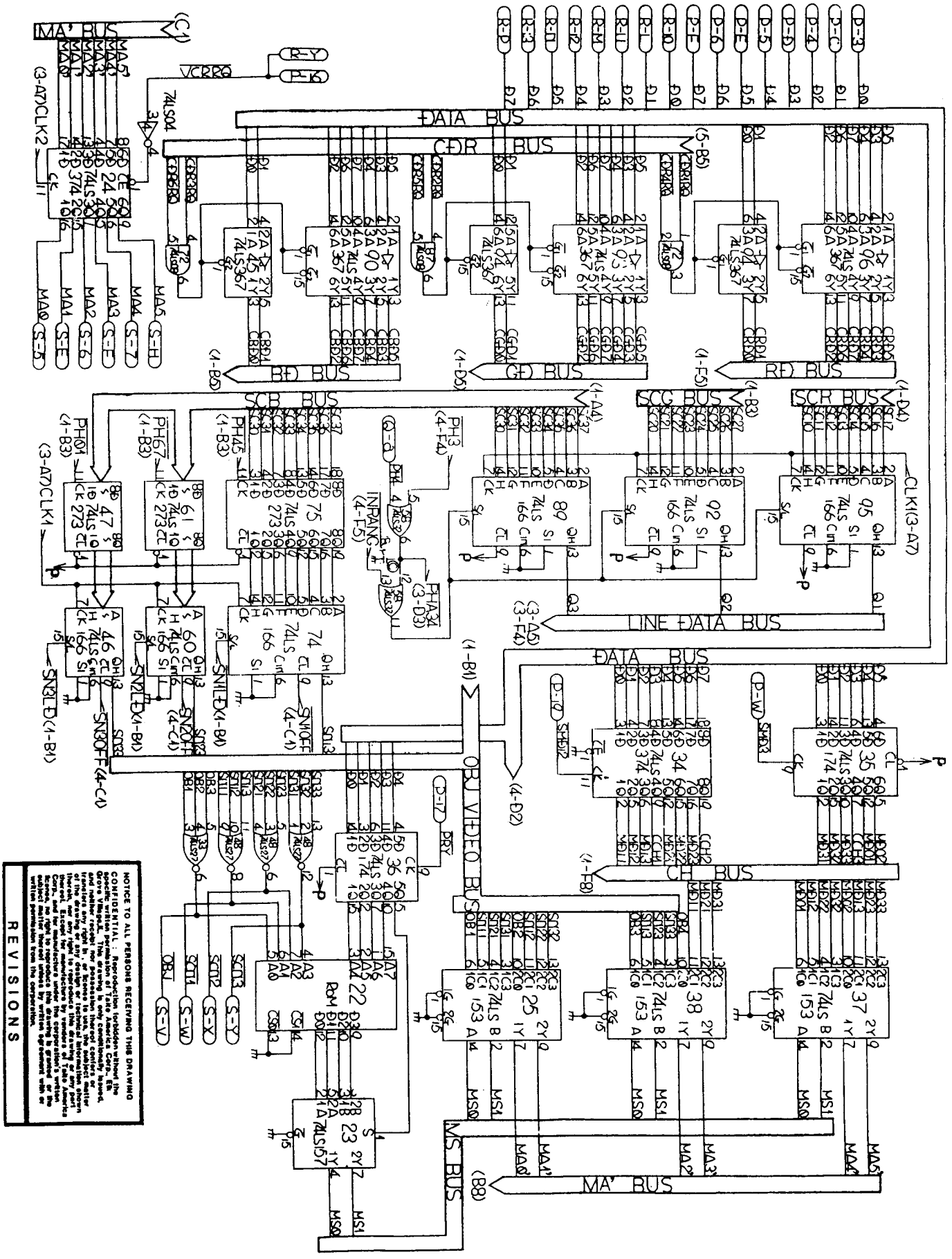

NOTICE TO ALL PERSONS RECEIVING THIS DRAWING
CONFIDENTIAL - Reproduction forbidden without the specific written permission of Take America Corp., Elk Grove Village, IL. This drawing is only conditionally issued, and neither receipt nor possession thereof confers or transfers any right in, or license to use, the subject matter, design or technical information shown thereon, nor any right to reproduce this drawing or any part thereof. Except for manufacture by vendors of Take America Corp., and for manufacture under the authority of an order therefor from the corporation, no use may be made, in whole or in part, of the subject matter hereof unless by written agreement with or written permission from the corporation.

VIDEO PC BOARD SCHEMATIC 3 0f 5

FIGURE 23

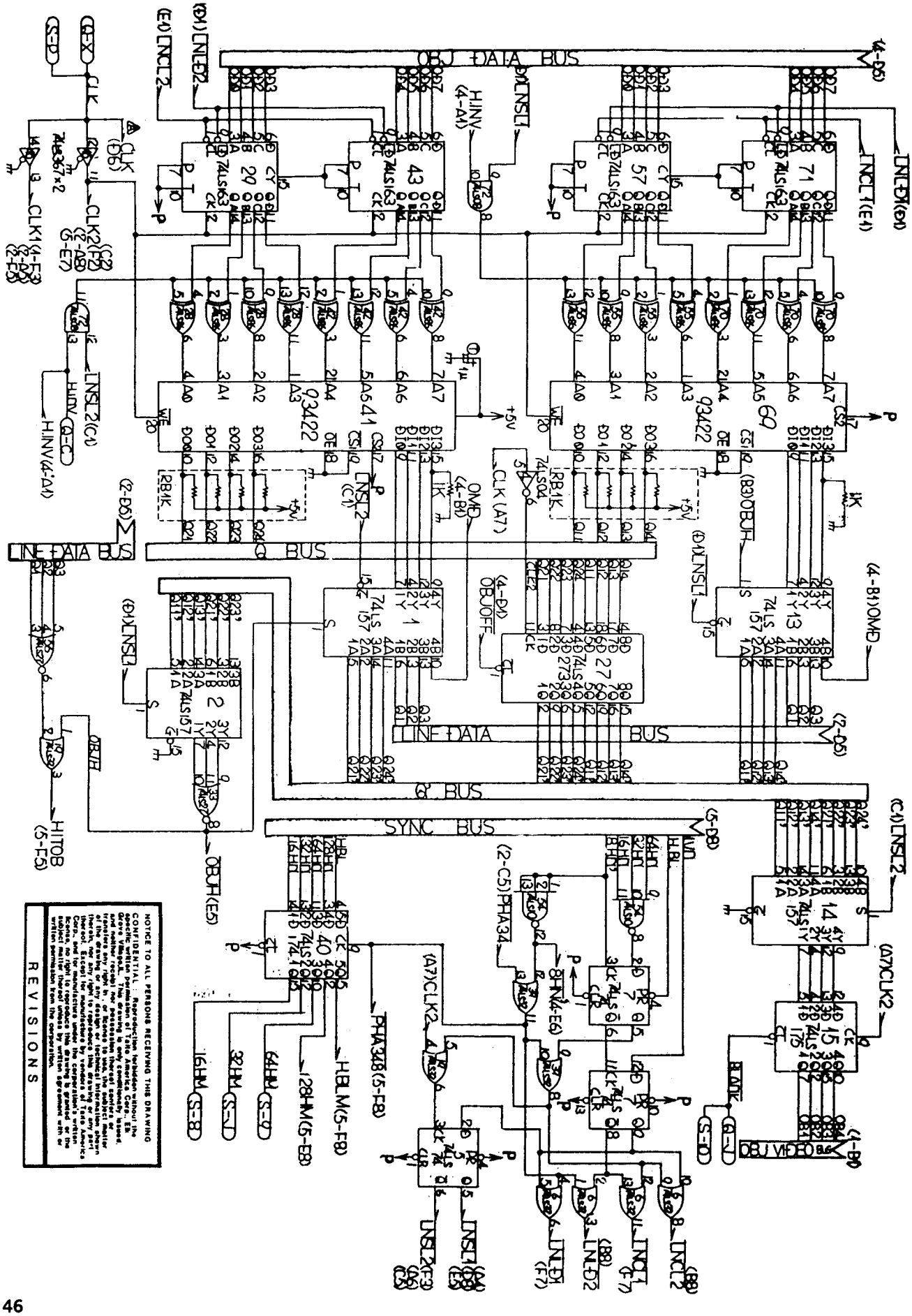

VIDEO PC BOARD SCHEMATIC 4 0f 5

FIGURE 23

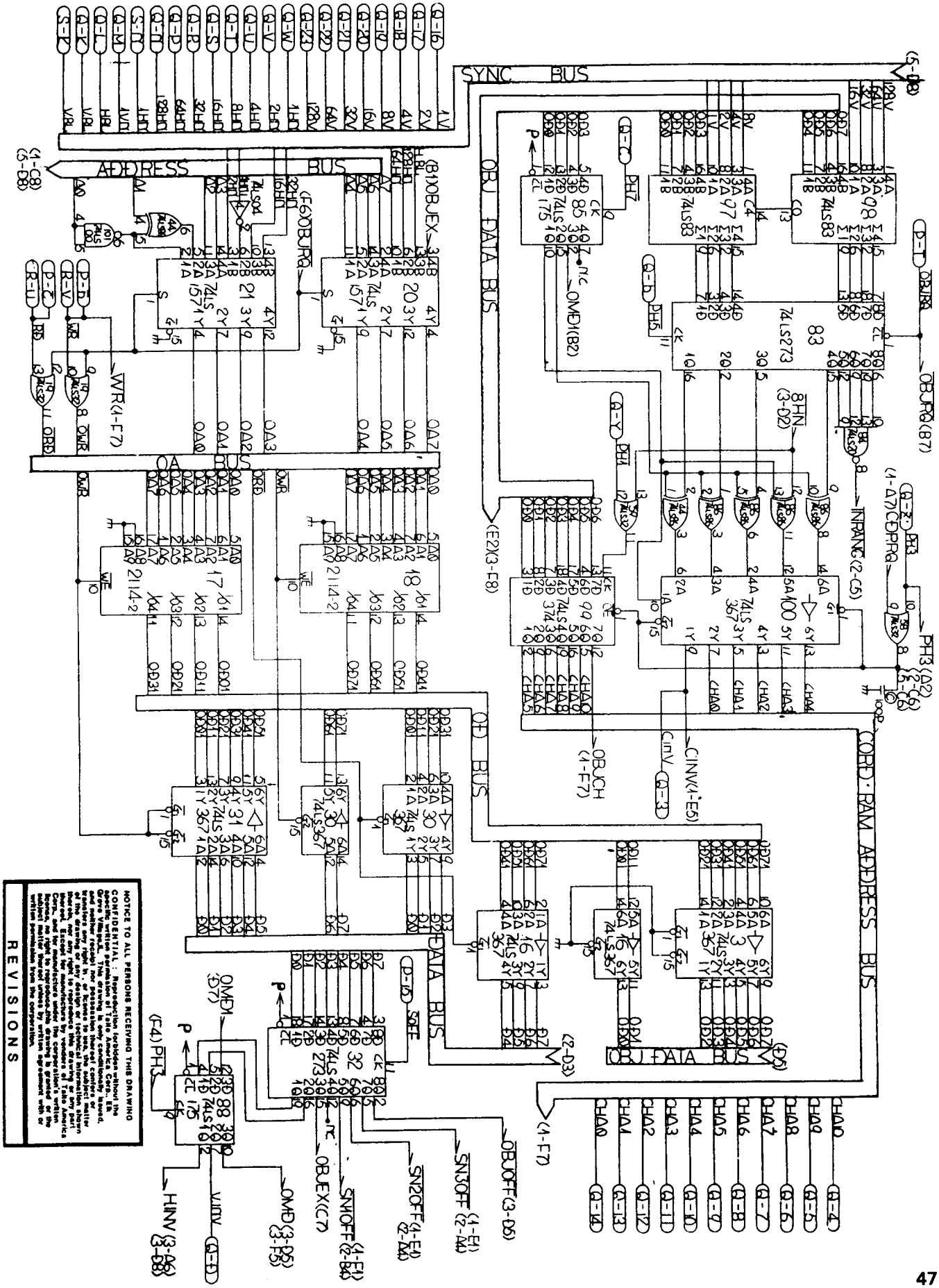

NOTICE TO ALL PERSONS RECEIVING THIS DRAWING
CONFIDENTIAL: Reproduction forbidden without the specific written permission of Taito America Corp., Elk Grove Village, IL. This drawing is only conditionally issued, and neither receipt nor possession thereof confers or transfers any right in, or license to use, the subject matter thereof, design or technical information shown thereon, nor any right to reproduce this drawing or any part thereof. Except for manufacture by vendors of Taito America Corp., and for manufacture under the corporation's written authority, no use shall be made, in whole or in part, of the subject matter hereof unless by written agreement with or written permission from the corporation.

VIDEO PC BOARD SCHEMATIC 5 0f 5

FIGURE 23

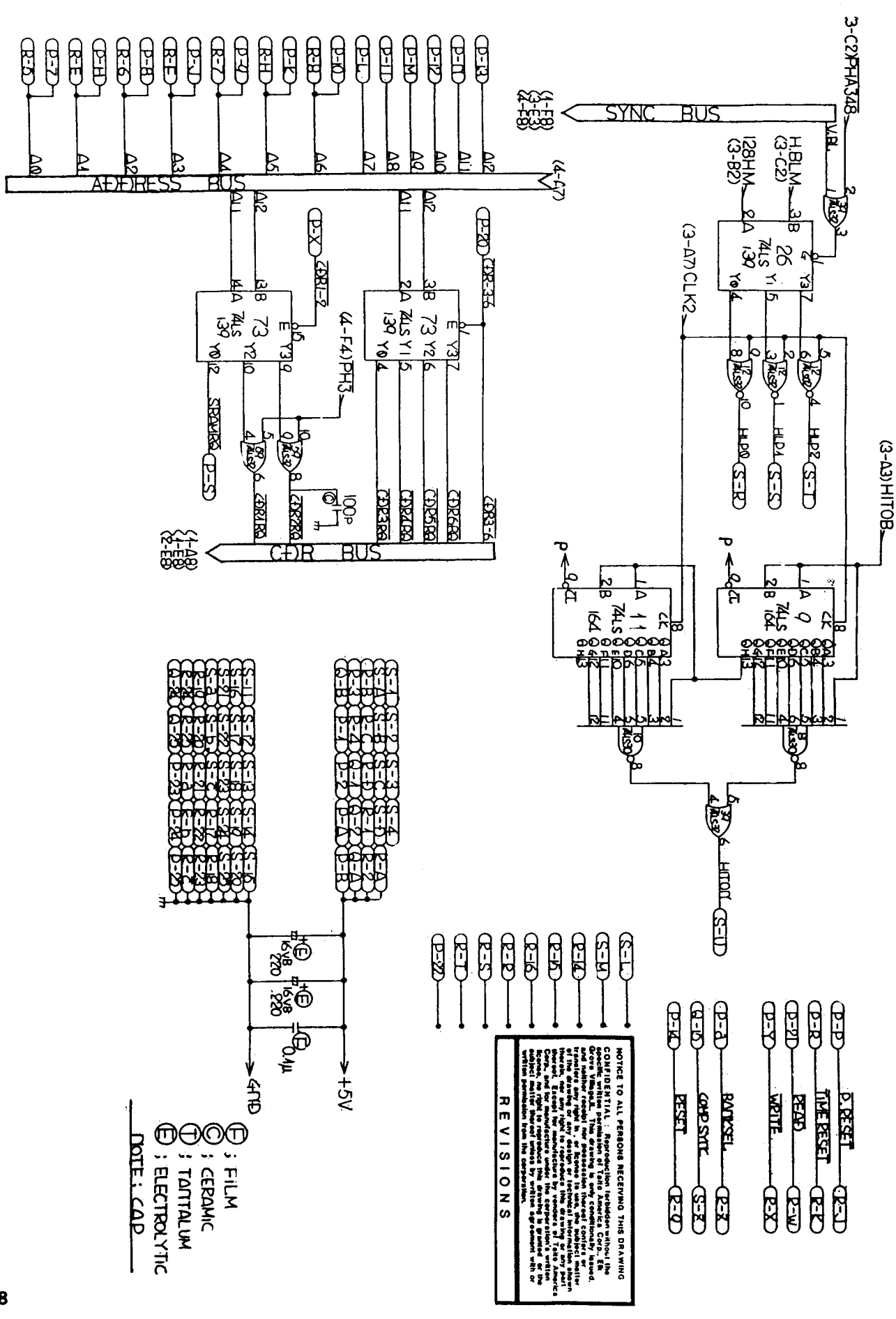

CPU BOARD COMPONENT LAYOUT
(4 BOARD SYSTEM)
FIGURE 24

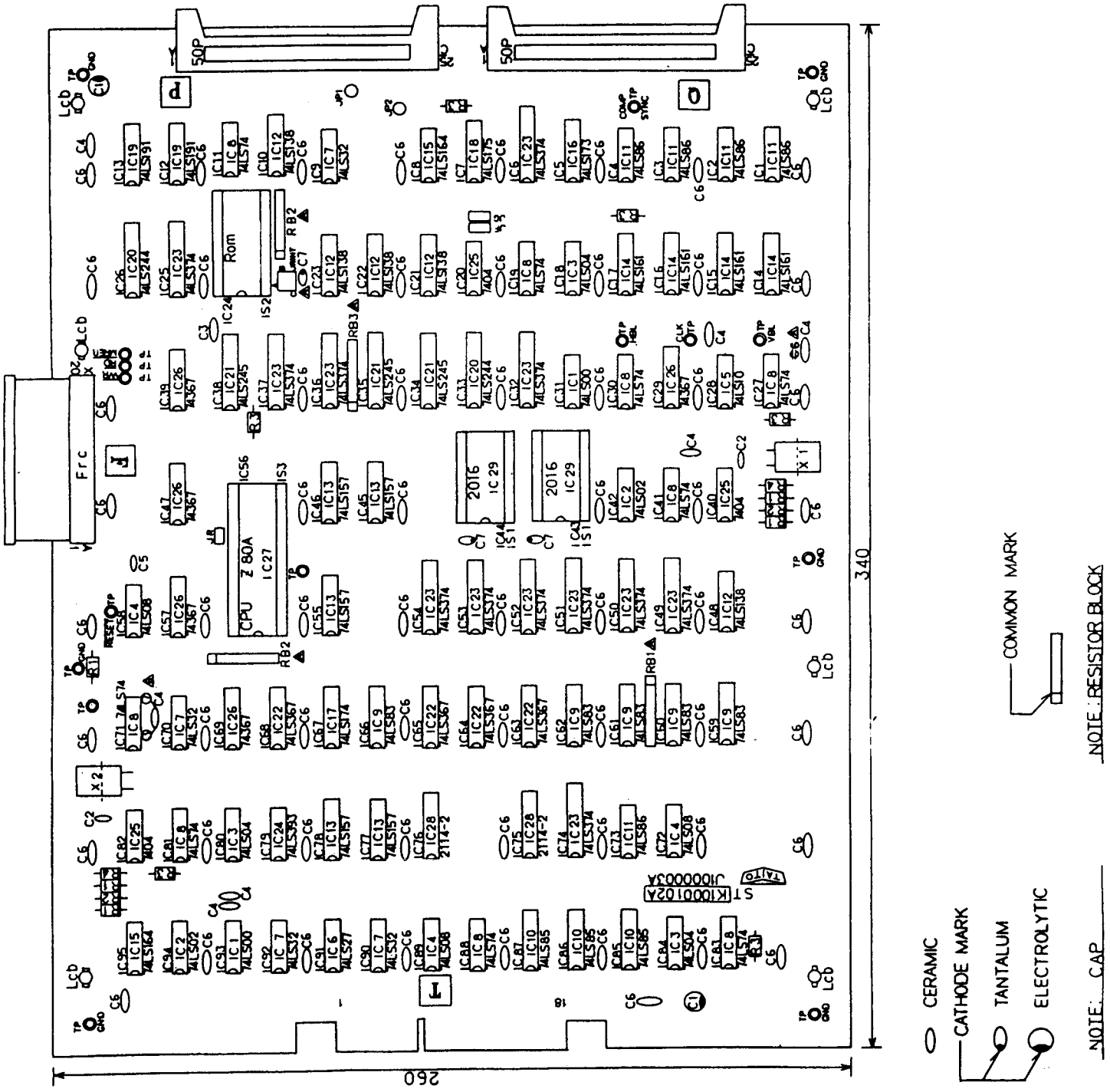

NOTICE TO ALL PERSONS RECEIVING THIS DRAWING

CONFIDENTIAL : Reproduction forbidden without the specific written permission of Taito America Corp., Elk Grove Village,IL. This drawing is only conditionally issued, and neither receipt nor possession thereof confers or transfers any right in , or license to use, the subject matter of the drawing or any design or technical information shown thereon, nor any right to reproduce this drawing or any part thereof. Except for manufacture by vendors of Taito America Corp., and for manufacture under the corporation's written license, no right to reproduce this drawing is granted or the subject matter thereof unless by written agreement with or written permission from the corporation.

REVISIONS

CPU BOARD FOUR BOARD SYSTEM

FIGURE 24

ITEM	REF	TAITO PART NO.	DESCRIPTION
1		99-AA017809	CPU PCB
2	C1	99-A1000135A	CAP, ELECTRO 220uf 16V
3	C2	99-A1200229A	CAP, CER DISC 22pf 50V
4	C3	99-A1200245A	CAP, CER DISC 100pf 50V
5	C4	99-A1200251A	CAP, CER DISC 180pf 50V
6	C5	99-A1200257A	CAP, CER DISC 330pf 50V
7	C6	99-A1200317A	CAP, CER DISC .1uf 50V
8	C7	99-A1320507A	CAP, TANT 1uf 25V
9	R1	11-00001-221	RES, 220 ohm 1/4W 5%
10	R2	11-00001-561	RES, 560 ohm 1/4W 5%
11	R3	11-00001-102	RES, 1K 1/4W 5%
12	R4	11-00001-182	RES, 18K 1/4W 5%
13	RB1	99-A2231065A	RES, SIP 1K
14	RB2	99-A2231081A	RES, SIP 4.7K
15	RB3	99-A2231089A	RES, SIP 10K
16	X1	99-A9000070A	X-TAL 12MHZ
17	X2	99-A9000072A	X-TAL 8 MHZ
18	IC1	15-20000-001	74LS00
19	IC2	15-20002-001	74LS02
20	IC3	15-20004-001	74LS04
21	IC4	15-20008-001	74LS08
22	IC5	15-20010-001	74LS10
23	IC6	15-20027-001	74LS27
24	IC7	15-20032-001	74LS32
25	IC8	15-20074-001	74LS74
26	IC9	99-B01N0083A	74LS83 A,B,C

ITEM	REF	TAITO PART NO.	DESCRIPTION
27	IC10	15-20085-001	74LS85
28	IC11	15-20086-001	74LS86
29	IC12	99-B01N0138A	74LS138 A,B,C
30	IC13	15-20157-001	74LS157
31	IC14	99-B01N0161A	74LS161 A,B,C
32	IC15	15-20164-001	74LS164
33	IC16	15-20173-001	74LS173
34	IC17	15-20174-001	74LS174
35	IC18	15-20175-001	74LS175
36	IC19	15-20191-001	74LS191
37	IC20	15-20244-001	74LS244
38	IC21	15-20245-001	74LS245
39	IC22	99-B01N0367A	74LS367 A,B,C
40	IC23	15-20374-001	74LS374
41	IC24	15-20393-001	74LS393
42	IC25	15-30074-001	7404
43	IC26	15-30367-001	74367
44	IC27	15-00015-001	CPU Z-80A
45	IC28	15-10003-001	RAM 2114-2
46	IC29	99-B10F0019A	RAM 2016 C,D,F,G
47	ROM	16-00016-001	ROM BA3-11
48	50P	25-00001-101	CONNECTOR RT. ANG. 50P
49	IS1	26-00001-024	IC SOCKET 24P
50	IS2	26-00001-028	IC SOCKET 28P
51	IS3	26-00001-040	IC SOCKET 40P
52	TP	99-C0600403A	TEST POINT

CPU PC BOARD SCHEMATIC 1 of 5

FIGURE 24

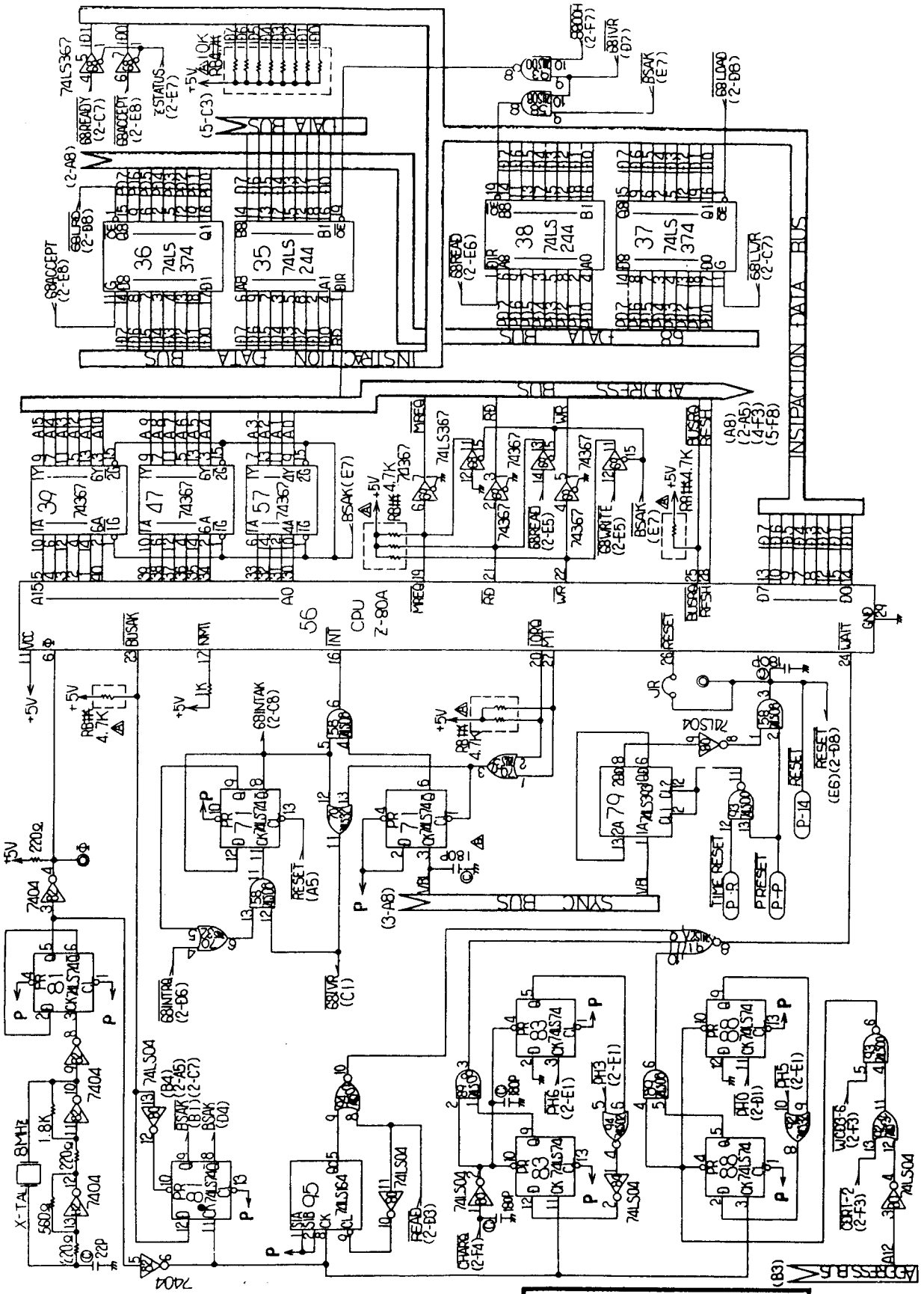

CPU PC BOARD SCHEMATIC 2 of 5

FIGURE 24

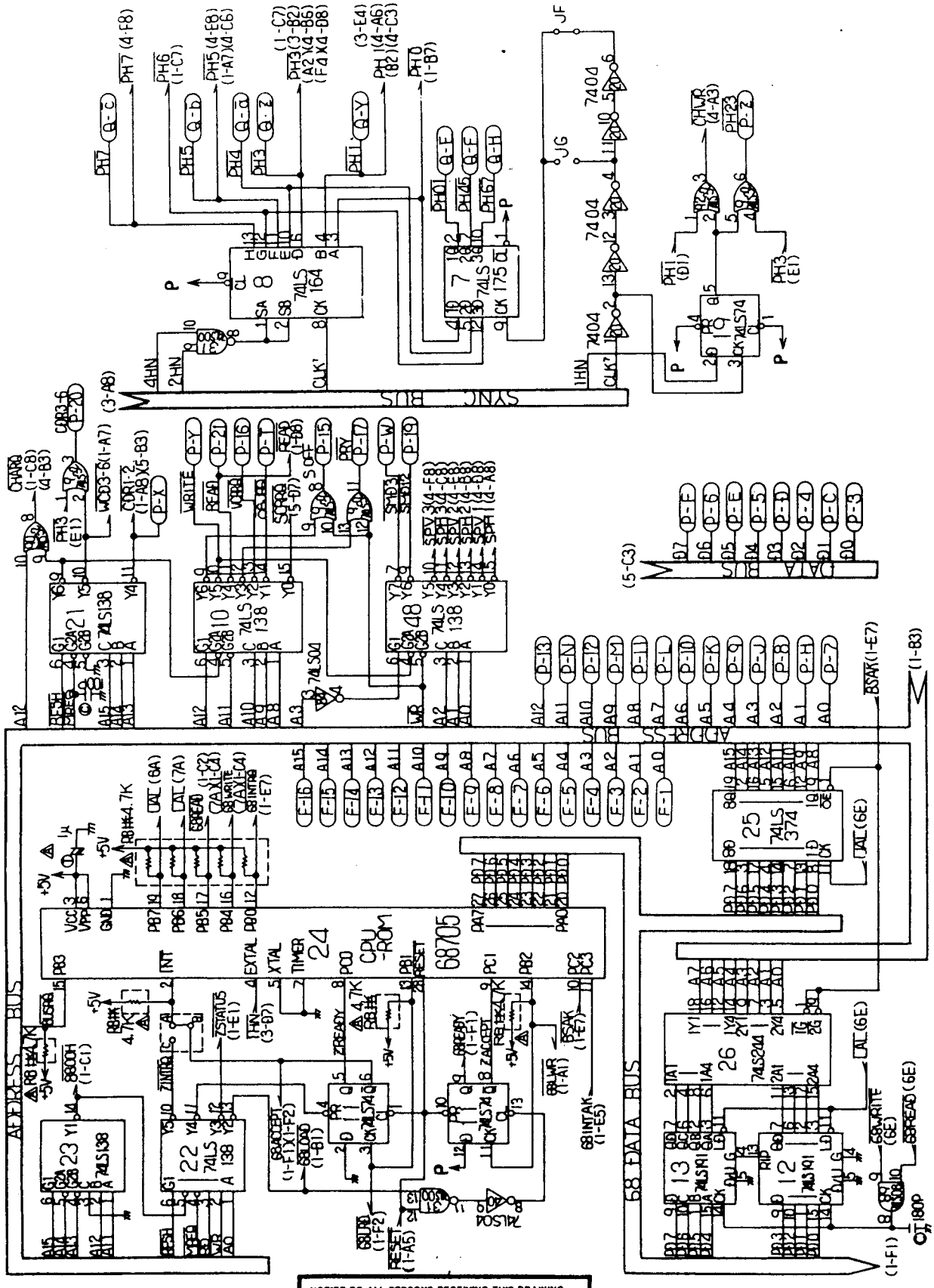
ADDRESS BUS
68 DATA BUS
68705
CPU -ROM
74LS138
74LS374
74LS244
74LS164
74LS175
74LS74
74LS04
7404
74LS74
74LS00
74LS32
74LS08
74LS86
74LS157
74LS273
74LS367
74LS368
74LS139
74LS373
74LS245
74LS240
74LS241
74LS257
74LS158
74LS153
74LS174
74LS373
74LS374
74LS244
74LS241
74LS240
74LS245

CPU PC BOARD SCHEMATIC 3 of 5

FIGURE 24

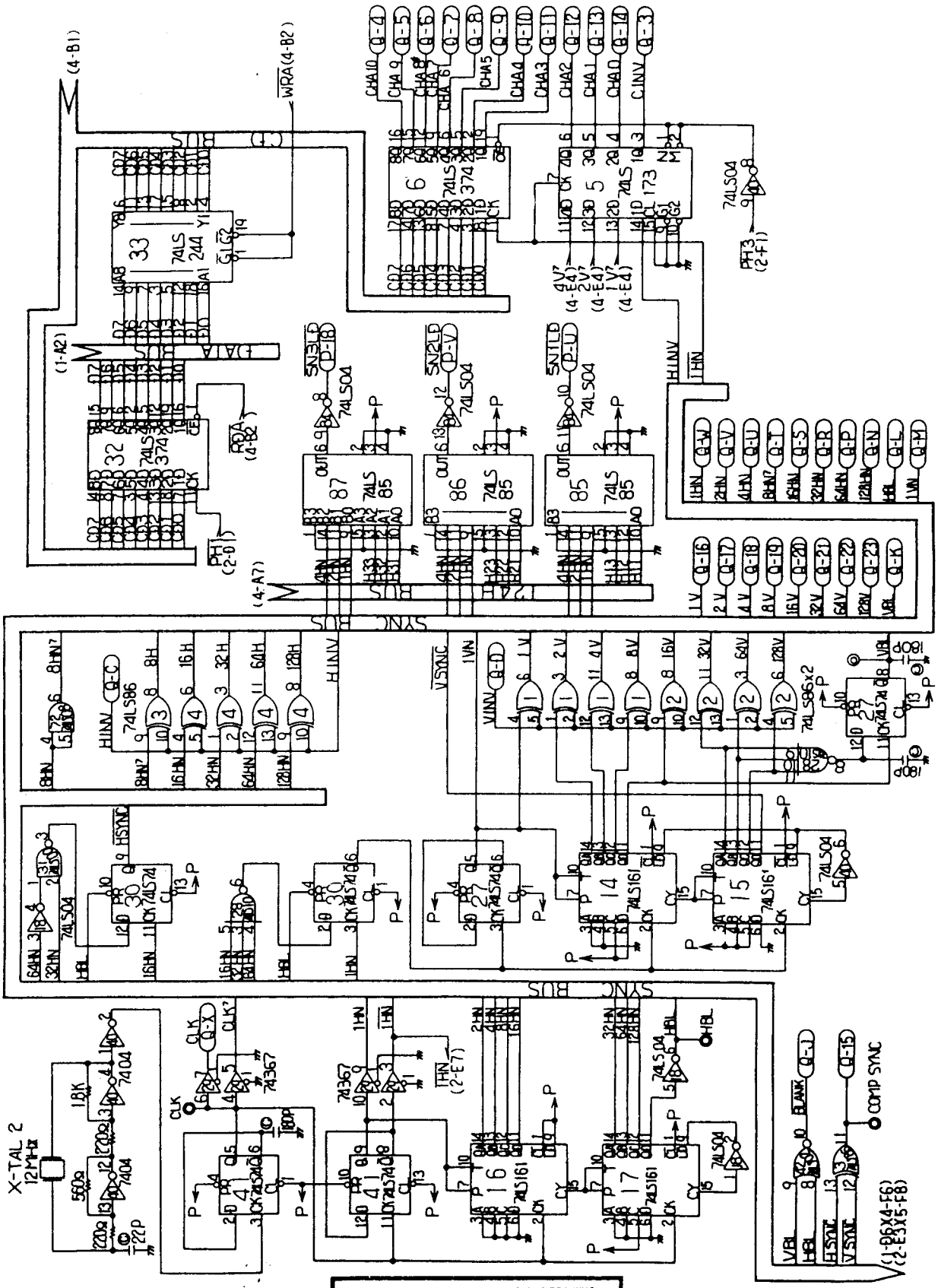

CPU PC BOARD SCHEMATIC 4 of 5

FIGURE 24

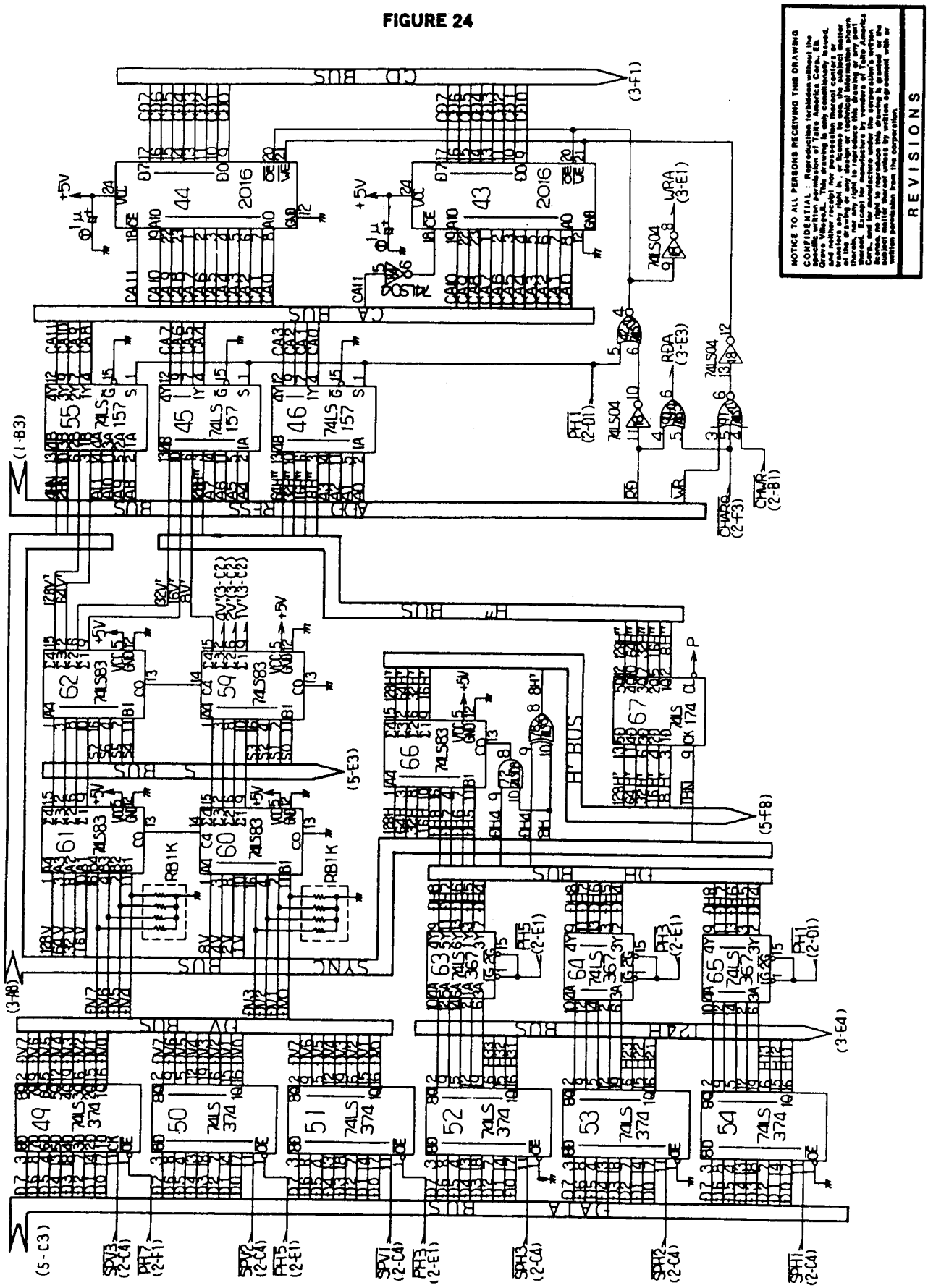

CPU PC BOARD SCHEMATIC 5 of 5

FIGURE 24

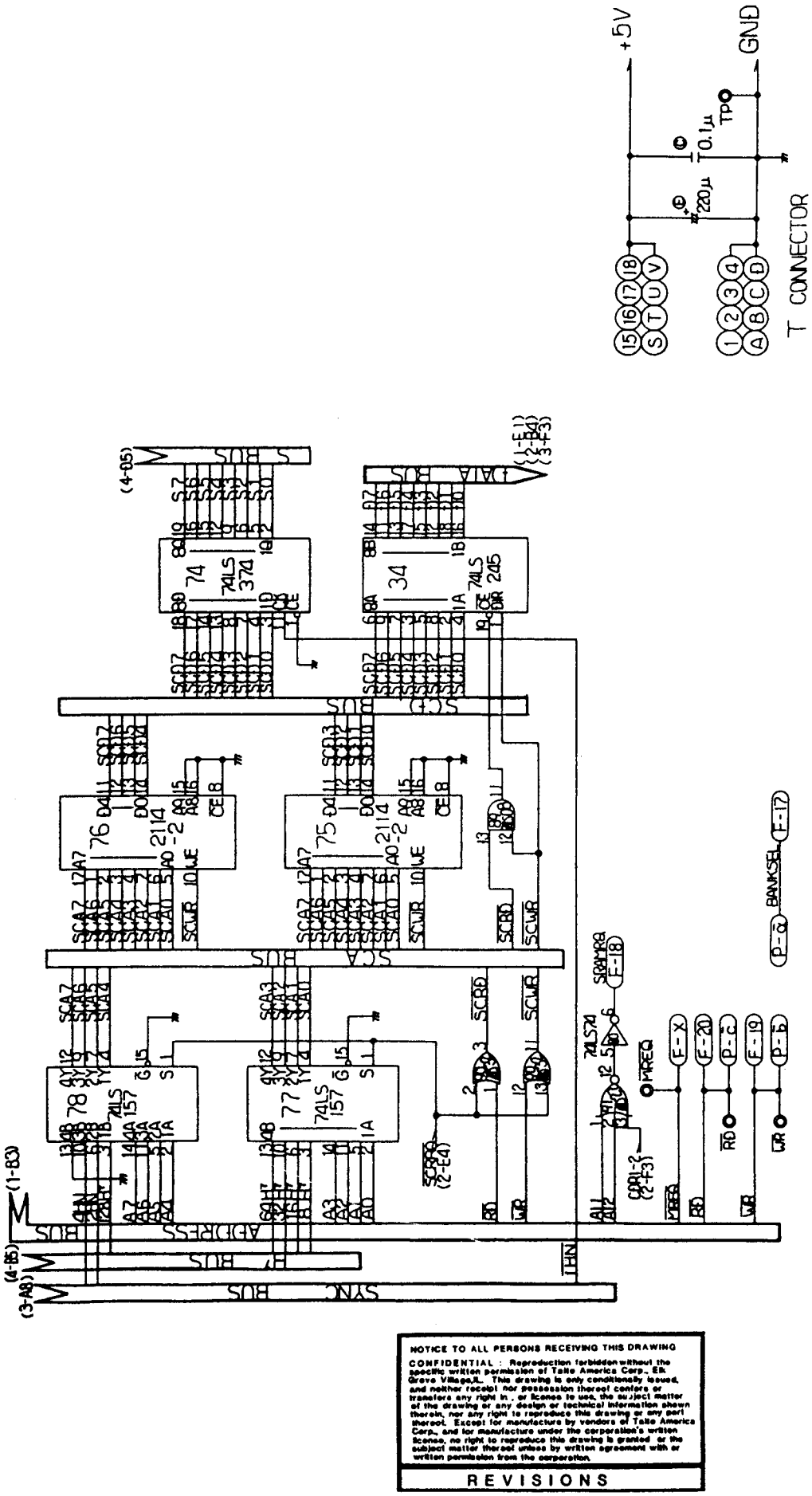

CPU BOARD FIVE BOARD SYSTEM

FIGURE 25

ITEM	SYM	TAITO PART NO.	DESCRIPTION
1		99-KNN00004	CPU PCB
2	50P	99-AA055310	CONNECTOR RT. ANG. 50P
3	1S1	26-00001-024	IC-SOCKET 24P
4	1S2	26-00001-040	IC-SOCKET 40P
5	TP	99-C0600403A	TEST POINT
6	XTAL	99-A9000070A	X-TAL 12MHZ
7	XTAL	99-A9000072A	X-TAL 8MHZ
8	1S3	26-00001-028	IC SOCKET 28P
9	IC1	15-10003-001	RAM 2114-2
10	IC2	99-B10F0019A	RAM TMM2016P
11	IC3	99-AAT33001	74LS00
12	IC4	15-20002-001	74LS02
13	IC5	15-20004-001	74LS04
14	IC6	15-20008-001	74LS08
15	IC7	15-20010-001	74LS10
16	IC8	15-30025-001	7425
17	IC9	15-20032-001	74LS32
18	IC10	15-20074-001	74LS74
19	IC11	15-20083-001	74LS83
20	IC12	15-20085-001	74LS85
21	IC13	15-20086-001	74LS86
22	IC14	15-20138-001	74LS138
23	IC15	15-20157-001	74LS157
24	IC16	15-20161-001	74LS161
25	IC17	15-20164-001	74LS164
26	IC18	15-20173-001	74LS173
27	IC19	15-20174-001	74LS174
28	IC20	15-20175-001	74LS175
29	IC21	15-20367-001	74LS367

ITEM	SYM	TAITO PART NO.	DESCRIPTION
30	IC22	15-20374-001	74LS374
31	IC23	15-20393-001	74LS393
32	IC24	15-30004-001	7404
33	IC25	15-30367-001	74367
34	CPU	15-00015-001	CPU Z-80A
35	C1	99-A1000135A	CAP, ELECTRO 220uf 16V
36	C2	99-A1200245A	CAP, FILM .1uf 1H104
37	C3	99-A1200229A	CAP, CER DISC 22pf 50V
38	C4	99-A1200251A	CAP, CER DISC 180pf 50V
39	C5	99-A1200257A	CAP, CER DISC 330pf 50V
40	C6		NOT USED
41	C7	99-A1320606A	CAP, TANT. 1uf
42	R1	11-00001-221	RES, 220 ohm 1/4W 5%
43	R2	11-00001-561	RES, 560 ohm 1/4W 5%
44	R3	11-00001-102	RES, 1K 1/4W 5%
45	R4	11-00001-182	RES, 1.8K 1/4W 5%
46	ROM1	16-00032-012	EPROM BA3-12
47	ROM2	16-00032-013	EPROM BA3-13
48	ROM3	16-00032-014	EPROM BA3-14
49	ROM4	16-00032-015	EPROM BA3-15
50	ROM5	16-00032-016	EPROM BA3-16-1
51	ROM6	16-00032-017	EPROM BA3-17
52	ROM7	16-00032-018	EPROM BA3-18-1
53	ROM8	16-00032-019	EPROM BA3-19-1
54	ROM9		NOT USED
55	ROM10		NOT USED
56	C8	99-A2100245A	CAP, CER DISC 100pf 50V
57	RB	99-A2231069A	RESISTOR SIP BLOCK 1K

CPU BOARD COMPONENT LAYOUT
(5 BOARD SYSTEM)

FIGURE 25

NOTICE TO ALL PERSONS RECEIVING THIS DRAWING

CONFIDENTIAL : Reproduction forbidden without the specific written permission of Taito America Corp., Elk Grove Village,IL. This drawing is only conditionally issued, and neither receipt nor possession thereof confers or transfers any right in , or license to use, the subject matter of the drawing or any design or technical information shown thereon, nor any right to reproduce this drawing or any part thereof. Except for manufacture by vendors of Taito America Corp., and for manufacture under the corporation's written license, no right to reproduce this drawing is granted or the subject matter thereof unless by written agreement with or written permission from the corporation.

REVISIONS

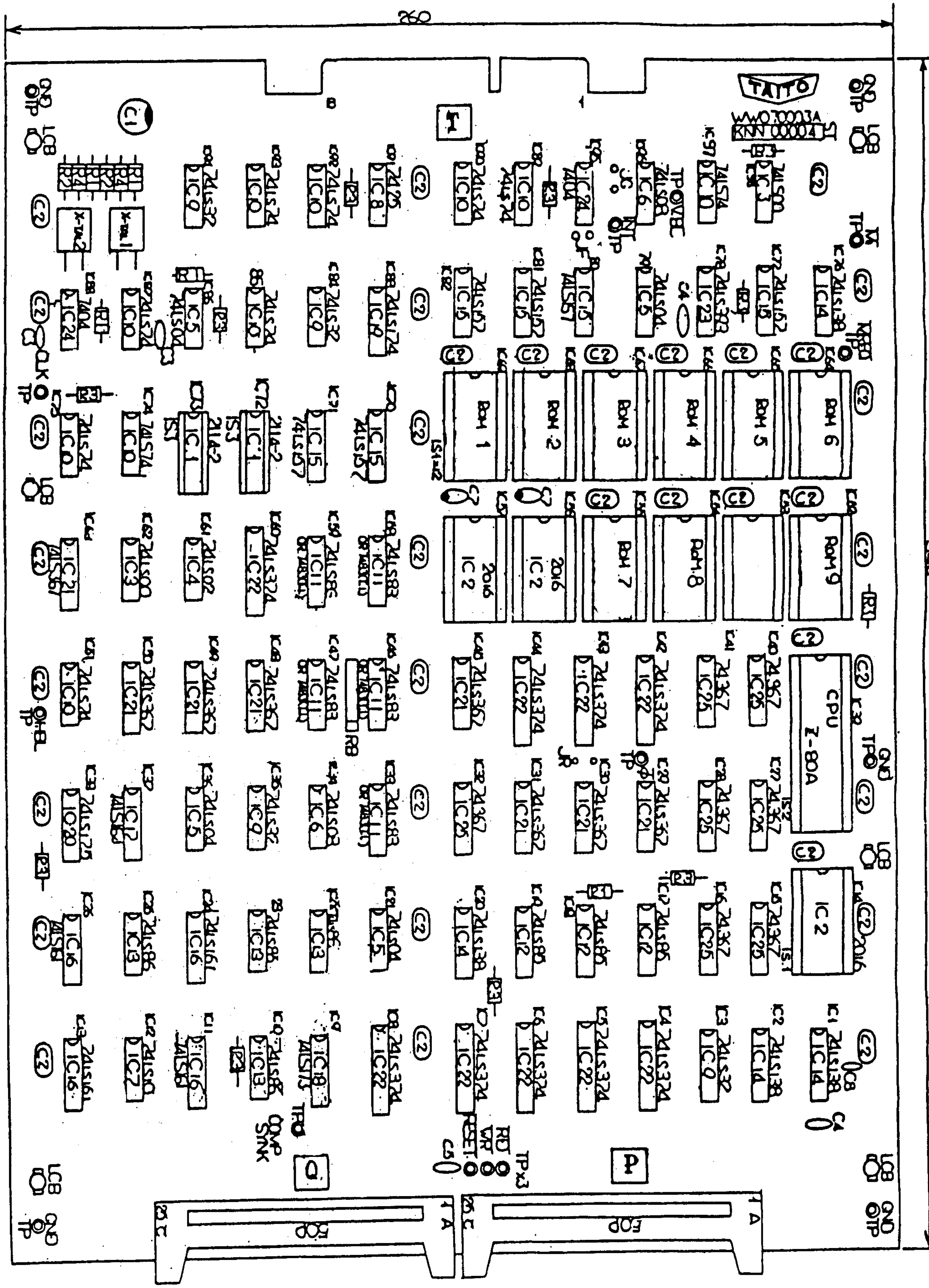

CPU PC BOARD SCHEMATIC 1 of 3

FIGURE 25

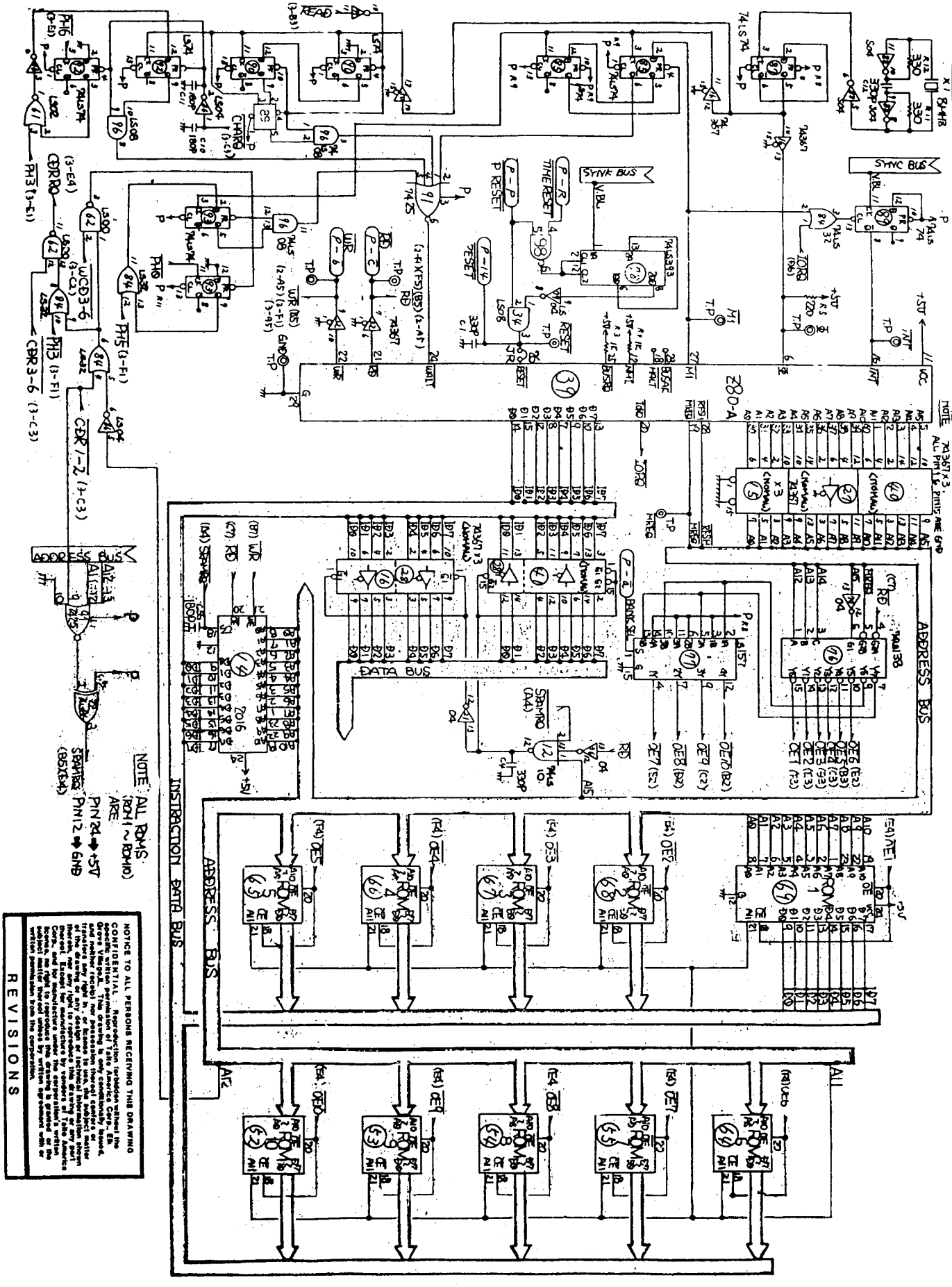

CPU PC BOARD SCHEMATIC 2 of 3

FIGURE 25

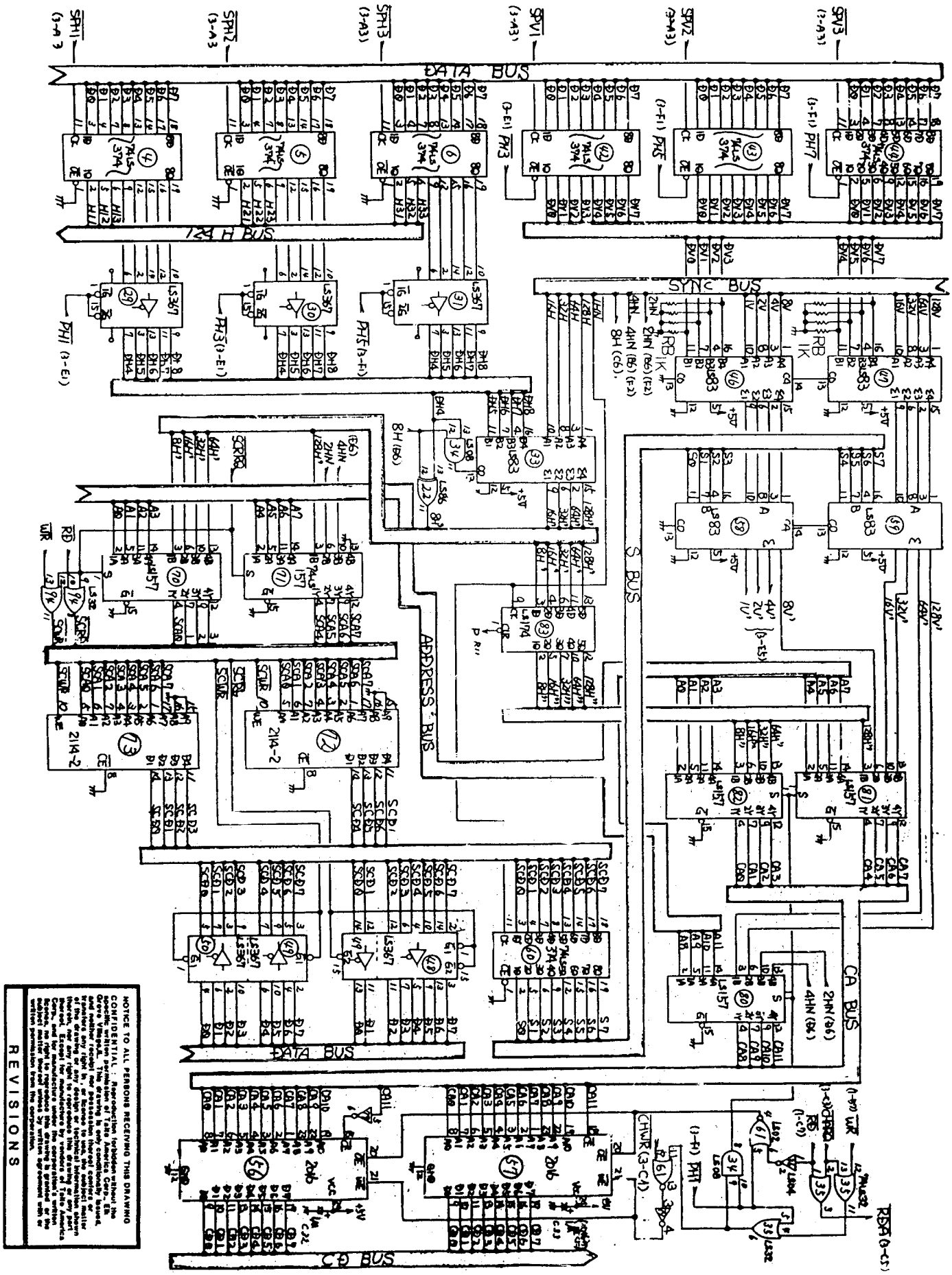

NOTICE TO ALL PERSONS RECEIVING THIS DRAWING
CONFIDENTIAL - Reproduction forbidden without the specific written permission of Taito America Corp., Elk Grove Village, IL. This drawing is only conditionally issued, and neither receipt nor possession thereof confers or transfers any right in or license to use or reproduce the subject matter of the drawing or any design or technical information shown thereon, nor any right to reproduce this drawing or any part thereof. Except for manufacture by vendors for Taito America Corp., no right to reproduce this drawing is granted or implied. This drawing is loaned subject to return on demand and subject to the agreement that neither it nor the subject matter thereof unless by written agreement with or written permission from the corporation.

CPU PC BOARD SCHEMATIC 3 of 3

FIGURE 25

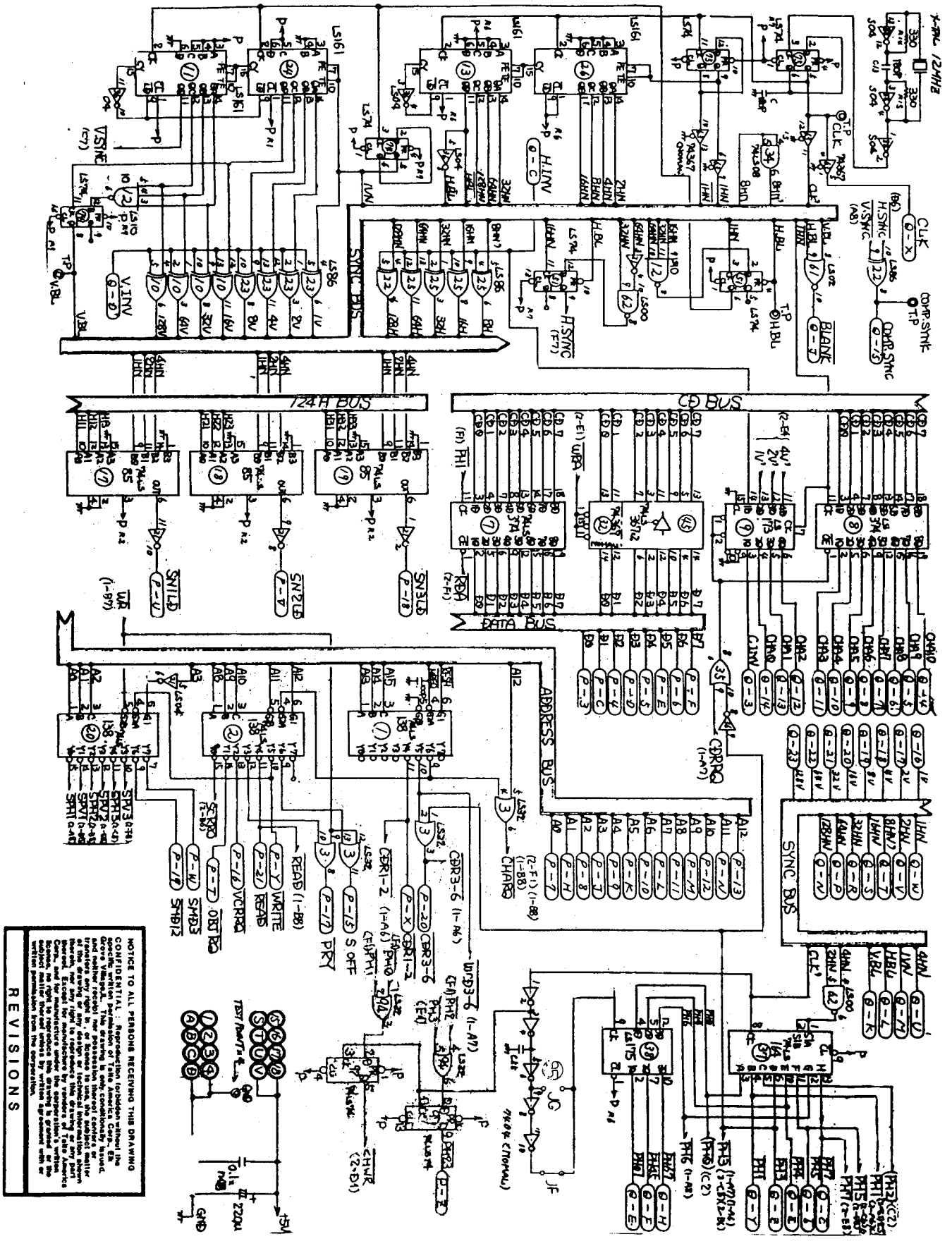

NOTICE TO ALL PERSONS RECEIVING THIS DRAWING
CONFIDENTIAL. Reproduction (or/hidden w/heel the specific written permission of Taito America Corp., Elk Grove Village, IL. The drawing is only conditionally issued. Transfer of any right in or license to use, the subject matter of the drawing or any design or technical information shown thereon, nor any right to reproduce this drawing or any part thereof, is not to be inferred from the delivery of this drawing. Neither the receipt nor possession thereof confers or transfers any right in or license to use, or reproduce any invention, design or process which may be disclosed or covered in whole or in part by this drawing nor any right to manufacture or have manufactured any article shown or described herein. Except as specifically authorized in writing by the owner, the holder of this drawing agrees to keep confidential the information shown on this drawing and to limit use of such information to those purposes specifically authorized by the owner. Unauthorized use of this drawing may cause irreparable harm to the owner and will subject the violator to liability for damages, including loss of profits, attorney fees and court costs. Unless otherwise agreed, the owner shall be deemed to own all inventions, designs or processes embodied in, or developed in connection with, this drawing. Acceptance of this drawing constitutes acceptance of the foregoing restrictions. Copyright laws of the United States and other countries protect the rights of the owner of this drawing. Unless otherwise agreed in writing, no right to reproduce this drawing is granted or implied. Taito America Corporation reserves all rights with respect to the subject matter thereof unless it grants such rights in writing. Unauthorized reproduction of this drawing may be made only with the written permission from the corporation.

SECURITY BOARD
(5 BOARD SYSTEM)

FIGURE 26

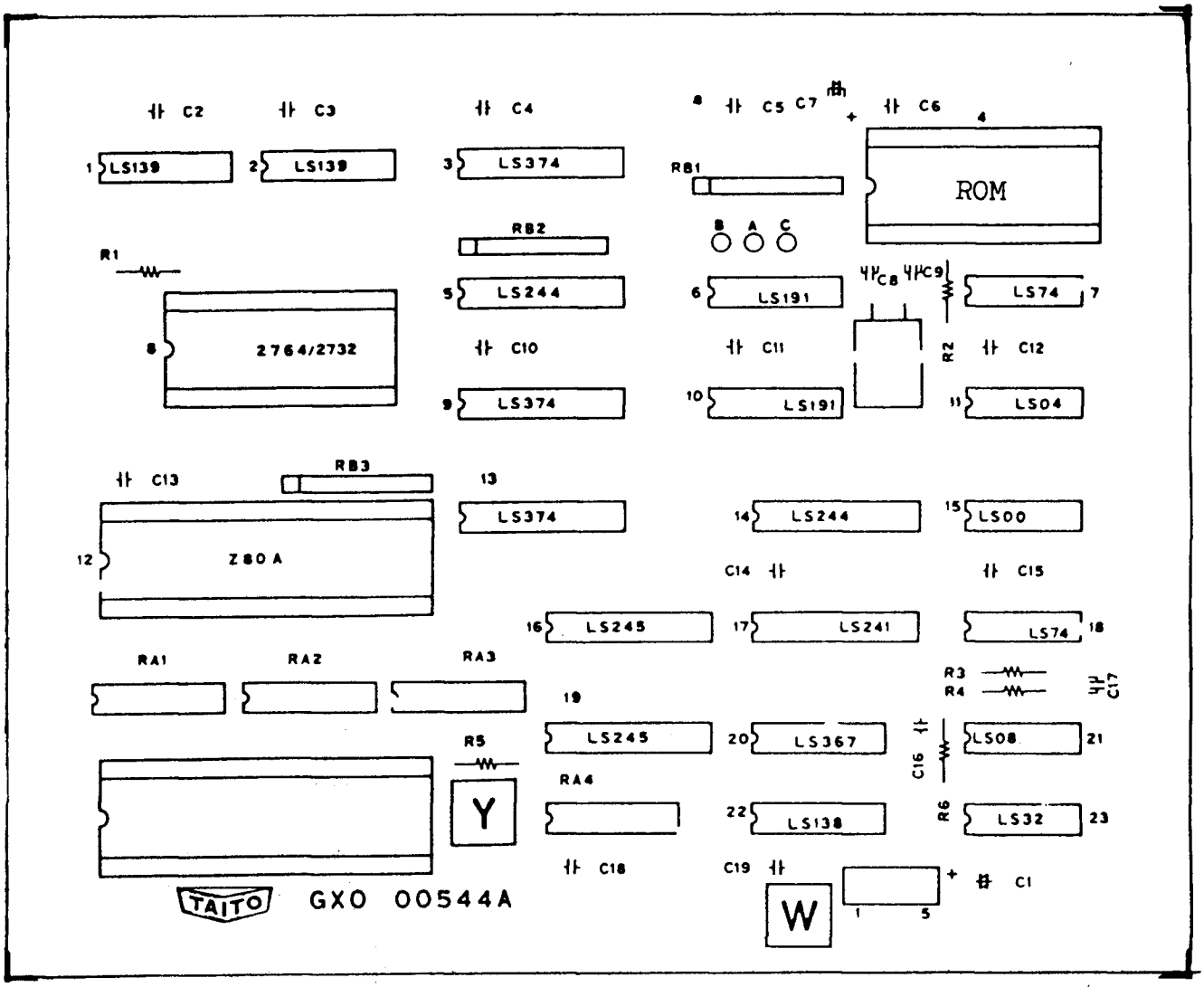

NOTICE TO ALL PERSONS RECEIVING THIS DRAWING

CONFIDENTIAL : Reproduction forbidden without the specific written permission of Taito America Corp., Elk Grove Village, IL. This drawing is only conditionally issued, and neither receipt nor possession thereof confers or transfers any right in , or license to use, the subject matter of the drawing or any design or technical information shown thereon, nor any right to reproduce this drawing or any part thereof. Except for manufacture by vendors of Taito America Corp., and for manufacture under the corporation's written license, no right to reproduce this drawing is granted or the subject matter thereof unless by written agreement with or written permission from the corporation.

REVISIONS

SECURITY BOARD FIVE BOARD SYSTEM

FIGURE 26

ITEM	TAITO PART NO.	DESCRIPTION
1	15-20000-001	74LS00
2	15-20004-001	74LS04
3	15-20008-001	74LS08
4	15-20032-001	74LS32
5	15-20074-001	74LS74
6	15-20138-001	74LS138
7	15-20139-001	74LS139
8	15-20191-001	74LS191
9	15-20241-001	74LS241
10	15-20244-001	74LS244
11	15-20245-001	74LS245
12	15-20367-001	74LS367
13	15-20374-001	74LS374
14	15-00015-001	CPU Z80A
15	16-00016-003	ROM BA3-11
16	99-A1200233A	CAP DISC 33PF 50V
17	99-A1200251A	CAP DISC 180PF 50V
18	99-A1200257A	CAP DISC 330PF 50V
19	99-A1200317A	CAP DISC .1UF 50V
20	99-A1320519A	CAP TANT 10UF 25V
21	99-A1000135A	CAP ELEC 220UF 16V
22	26-00001-028	IC SOCKET 28 PIN
23	26-00001-040	IC SOCKET 40 PIN
24		XTAL 3.0 MHZ 25 RES DIP 100 OHM

SECURITY BOARD SCHEMATIC 1 of 2

FIGURE 26

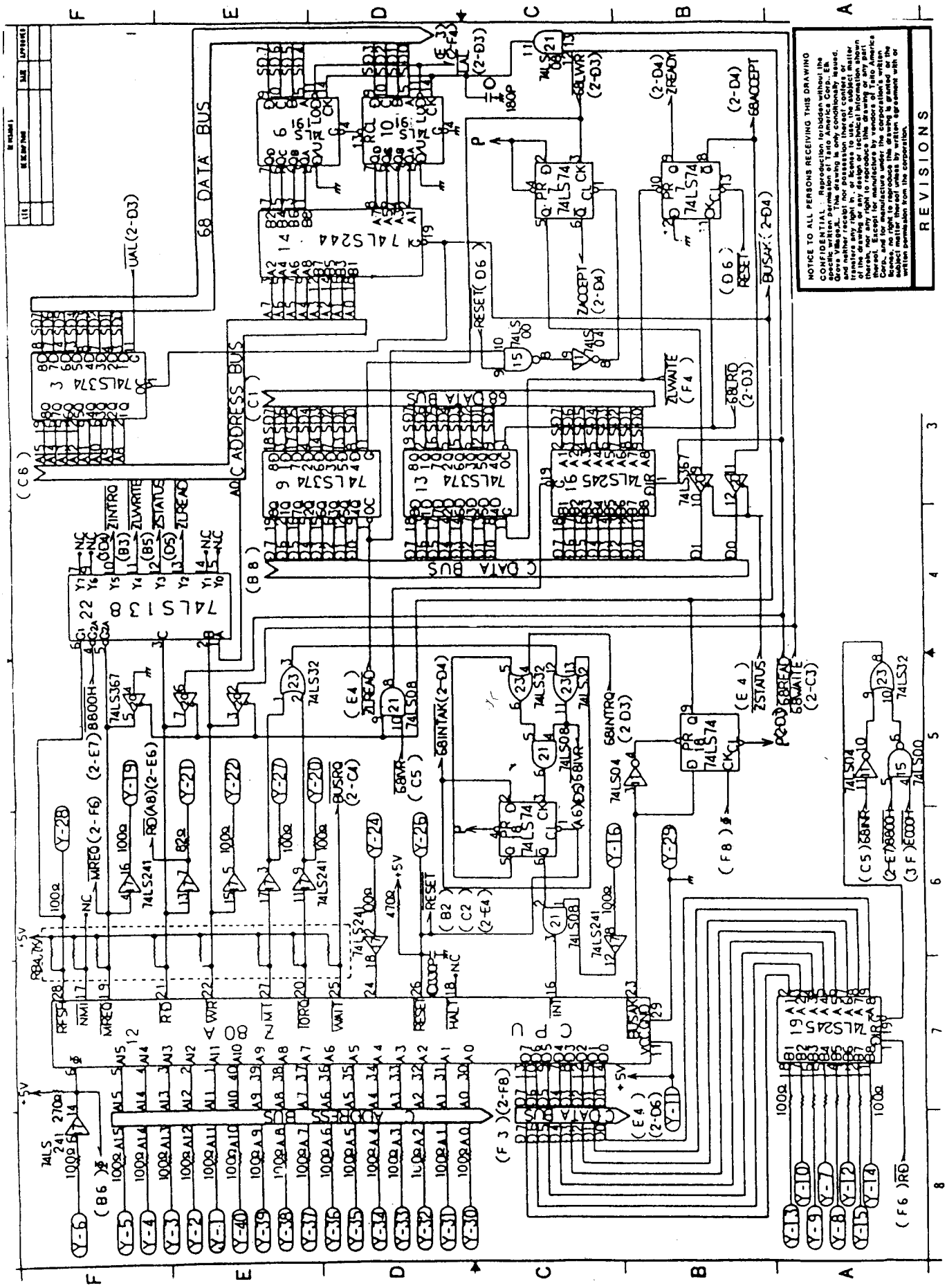
68 DATA BUS
ADDRESS BUS
DATA BUS
REVISIONS
NOTICE TO ALL PERSONS RECEIVING THIS DRAWING
CONFIDENTIAL. Reproduction forbidden without the specific written permission of Taito America Corp. Ell. Copyright. This drawing is only conditionally issued, and neither receipt nor possession thereof confers or transfers any right in, or license to use, the subject matter of the drawing or any rights to manufacture thereby shown or to reproduce it except in accordance with the terms of the written agreement between Taito America Corp. and the manufacturer under the corporation's written license, no right to reproduce the drawing is granted. The subject matter shown is the property of Taito America Corp. and for manufacture under the corporation's written license, no right to reproduce the drawing or any part thereof. Except for manufacture by vendors of Taito America Corp., and for manufacture under the corporation's written license, no right to reproduce the drawing is granted. The subject matter shown is the property of Taito America Corp.

SECURITY BOARD SCHEMATIC 2 of 2

FIGURE 26

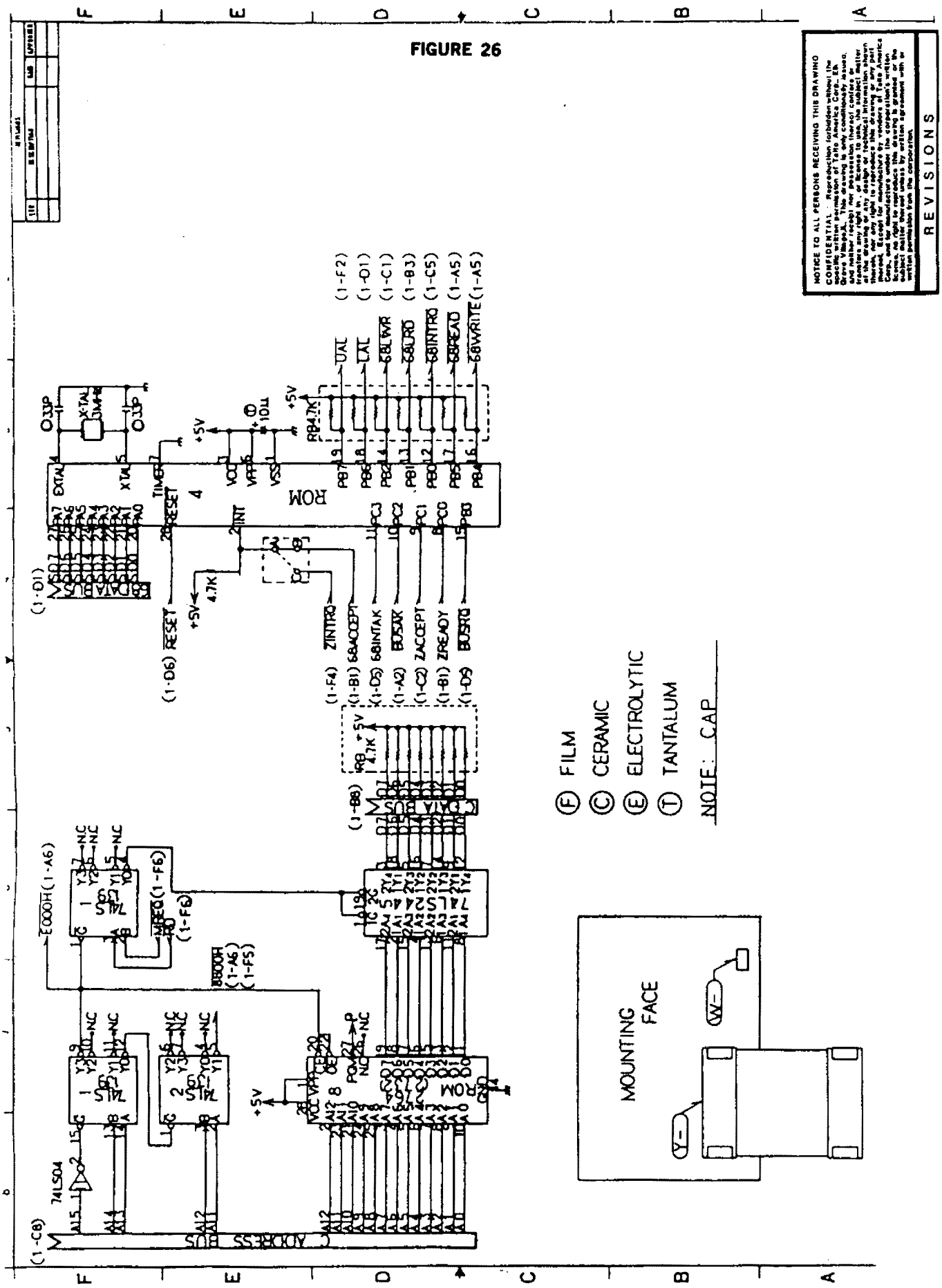

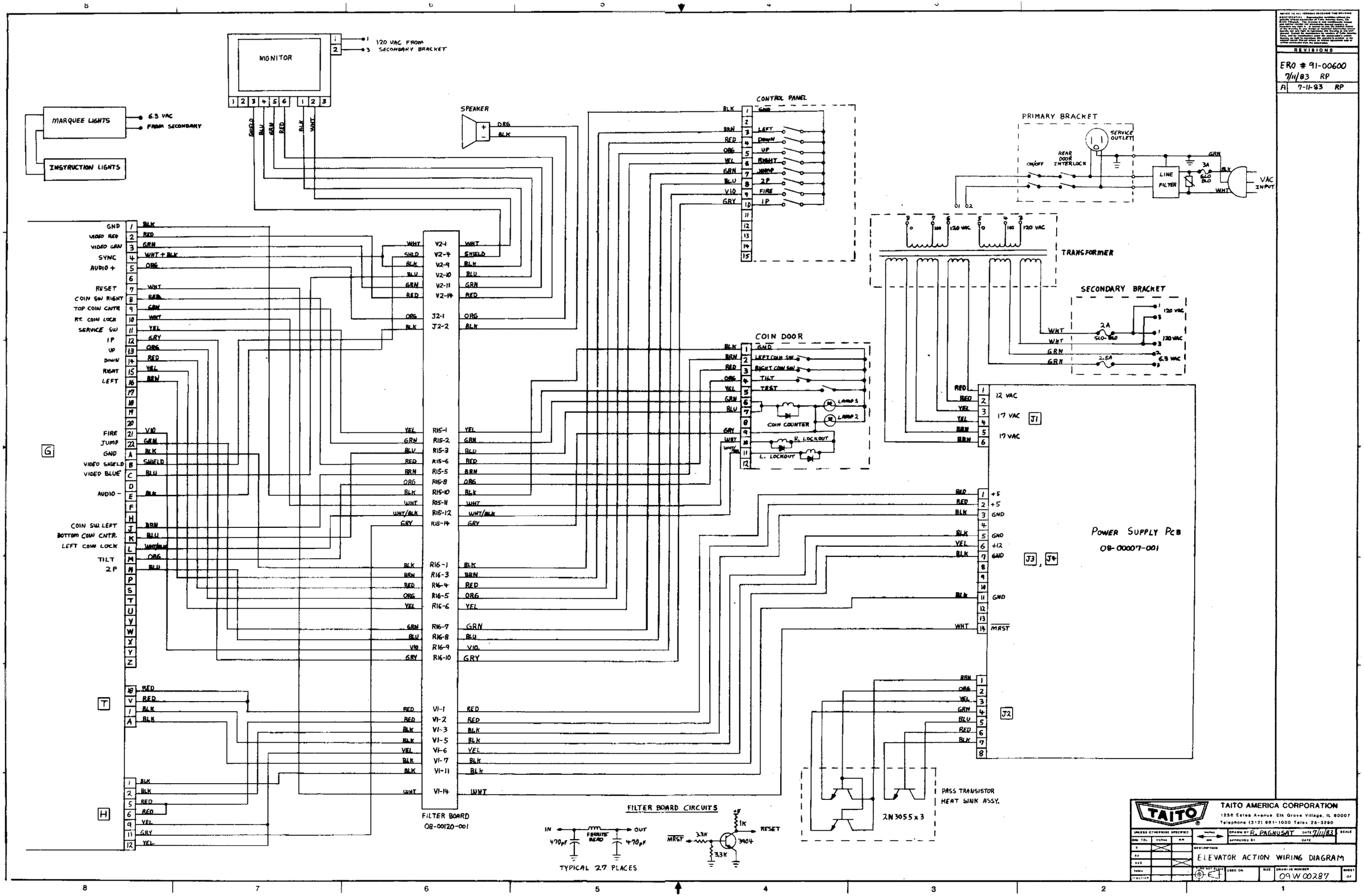

REVISIONS

ERO # 91-00600
7/11/83 RP
A 7-11-83 RP

TAITO AMERICA CORPORATION
1256 Estes Avenue, Elk Grove Village, IL 60007
Telephone (312) 981-1000 Telex 25-3290

DRAWN BY R. PAGNUSAT DATE 7/11/83
APPROVED BY DATE

DESCRIPTION
ELEVATOR ACTION WIRING DIAGRAM

DRAWING NUMBER 09W00287

WARRANTY

TAITO AMERICA CORPORATION warrants that its printed circuit boards and parts are free from defects in material and workmanship under nomal use and service for a period of ninety (90) days from the date of shipment. Seller warrants that its monitors are free from defects in material and workmanship under normal use for a period of thirty (30) days from the date of shipment.
The factory also warrants all socketed parts for a period of ninety (90) days when furnished with the game serial number.
If the above products fail to conform to this Warranty Taito America Corporation has the option to repair, replace, or credit the Buyer's account.
The Buyer must notify Taito America Corporation in writing upon finding the defective product. Buyer must also return the defective product prepaid to Taito America Corporation's factory located in Elk Grove Village, Illinois.
If Taito America Corporation determines upon examining the returned product that damage was caused by accident, misuse, neglect, modification, or improper repair or testing, this Warranty will be void.
In no event will Taito America Corporation be held for loss of profits to Buyer.



TAITO AMERICA CORPORATION
1256 Estes Avenue, Elk Grove Village, IL 60007
Telephone (312) 981-1000 Telex 25-3290