
G-LOC
AIR BATTLE
LOSS OF CONSCIOUSNESS BY G FORCE
SEGA

G-LOC AIR BATTLE

Loss Of Consciousness By G Force

Select the course and take off!

- **BEGINNER:** Training course for beginners.
- **MEDIUM:** After training practice, go into actual battle.
- **EXPERT:** Skillful players can engage in aerial dogfights.

Destroy enemy aircraft as per instructions!

When time is up, the game is over.

Missiles remaining when the mission is over will be taken into the next timer calculation.





SEGA®

© SEGA 1990

422-0336

1ST PRINTING-AR

SEGA®

G-LOC AIR BATTLE

LOSS OF CONSCIOUSNESS BY G FORCE

OWNER'S MANUAL

DELUXE TYPE


SEGA ENTERPRISES
SU-27
MiG-29
F-14
F-15
F-16
F-18
SU-24
SU-25
MiG-23
MiG-31
F-117
SU-35
F-22
SU-26
SU-34
SU-37
MiG-25
MiG-27
MiG-33
F-111
F-19
F-20
F-23
F-24
F-25
F-26
F-27
F-28
F-29
F-30
F-31
F-32
F-33
F-34
F-35
F-36
F-37
F-38
F-39
F-40
F-41
F-42
F-43
F-44
F-45
F-46
F-47
F-48
F-49
F-50
F-51
F-52
F-53
F-54
F-55
F-56
F-57
F-58
F-59
F-60
F-61
F-62
F-63
F-64
F-65
F-66
F-67
F-68
F-69
F-70
F-71
F-72
F-73
F-74
F-75
F-76
F-77
F-78
F-79
F-80
F-81
F-82
F-83
F-84
F-85
F-86
F-87
F-88
F-89
F-90
F-91
F-92
F-93
F-94
F-95
F-96
F-97
F-98
F-99
F-100
F-101
F-102
F-103
F-104
F-105
F-106
F-107
F-108
F-109
F-110
F-111
F-112
F-113
F-114
F-115
F-116
F-117
F-118
F-119
F-120
F-121
F-122
F-123
F-124
F-125
F-126
F-127
F-128
F-129
F-130
F-131
F-132
F-133
F-134
F-135
F-136
F-137
F-138
F-139
F-140
F-141
F-142
F-143
F-144
F-145
F-146
F-147
F-148
F-149
F-150
F-151
F-152
F-153
F-154
F-155
F-156
F-157
F-158
F-159
F-160
F-161
F-162
F-163
F-164
F-165
F-166
F-167
F-168
F-169
F-170
F-171
F-172
F-173
F-174
F-175
F-176
F-177
F-178
F-179
F-180
F-181
F-182
F-183
F-184
F-185
F-186
F-187
F-188
F-189
F-190
F-191
F-192
F-193
F-194
F-195
F-196
F-197
F-198
F-199
F-200
F-201
F-202
F-203
F-204
F-205
F-206
F-207
F-208
F-209
F-210
F-211
F-212
F-213
F-214
F-215
F-216
F-217
F-218
F-219
F-220
F-221
F-222
F-223
F-224
F-225
F-226
F-227
F-228
F-229
F-230
F-231
F-232
F-233
F-234
F-235
F-236
F-237
F-238
F-239
F-240
F-241
F-242
F-243
F-244
F-245
F-246
F-247
F-248
F-249
F-250
F-251
F-252
F-253
F-254
F-255
F-256
F-257
F-258
F-259
F-260
F-261
F-262
F-263
F-264
F-265
F-266
F-267
F-268
F-269
F-270
F-271
F-272
F-273
F-274
F-275
F-276
F-277
F-278
F-279
F-280
F-281
F-282
F-283
F-284
F-285
F-286
F-287
F-288
F-289
F-290
F-291
F-292
F-293
F-294
F-295
F-296
F-297
F-298
F-299
F-300
F-301
F-302
F-303
F-304
F-305
F-306
F-307
F-308
F-309
F-310
F-311
F-312
F-313
F-314
F-315
F-316
F-317
F-318
F-319
F-320
F-321
F-322
F-323
F-324
F-325
F-326
F-327
F-328
F-329
F-330
F-331
F-332
F-333
F-334
F-335
F-336
F-337
F-338
F-339
F-340
F-341
F-342
F-343
F-344
F-345
F-346
F-347
F-348
F-349
F-350
F-351
F-352
F-353
F-354
F-355
F-356
F-357
F-358
F-359
F-360
F-361
F-362
F-363
F-364
F-365
F-366
F-367
F-368
F-369
F-370
F-371
F-372
F-373
F-374
F-375
F-376
F-377
F-378
F-379
F-380
F-381
F-382
F-383
F-384
F-385
F-386
F-387
F-388
F-389
F-390
F-391
F-392
F-393
F-394
F-395
F-396
F-397
F-398
F-399
F-400
F-401
F-402
F-403
F-404
F-405
F-406
F-407
F-408
F-409
F-410
F-411
F-412
F-413
F-414
F-415
F-416
F-417
F-418
F-419
F-420
F-421
F-422
F-423
F-424
F-425
F-426
F-427
F-428
F-429
F-430
F-431
F-432
F-433
F-434
F-435
F-436
F-437
F-438
F-439
F-440
F-441
F-442
F-443
F-444
F-445
F-446
F-447
F-448
F-449
F-450
F-451
F-452
F-453
F-454
F-455
F-456
F-457
F-458
F-459
F-460
F-461
F-462
F-463
F-464
F-465
F-466
F-467
F-468
F-469
F-470
F-471
F-472
F-473
F-474
F-475
F-476
F-477
F-478
F-479
F-480
F-481
F-482
F-483
F-484
F-485
F-486
F-487
F-488
F-489
F-490
F-491
F-492
F-493
F-494
F-495
F-496
F-497
F-498
F-499
F-500
F-501
F-502
F-503
F-504
F-505
F-506
F-507
F-508
F-509
F-510
F-511
F-512
F-513
F-514
F-515
F-516
F-517
F-518
F-519
F-520
F-521
F-522
F-523
F-524
F-525
F-526
F-527
F-528
F-529
F-530
F-531
F-532
F-533
F-534
F-535
F-536
F-537
F-538
F-539
F-540
F-541
F-542
F-543
F-544
F-545
F-546
F-547
F-548
F-549
F-550
F-551
F-552
F-553
F-554
F-555
F-556
F-557
F-558
F-559
F-560
F-561
F-562
F-563
F-564
F-565
F-566
F-567
F-568
F-569
F-570
F-571
F-572
F-573
F-574
F-575
F-576
F-577
F-578
F-579
F-580
F-581
F-582
F-583
F-584
F-585
F-586
F-587
F-588
F-589
F-590
F-591
F-592
F-593
F-594
F-595
F-596
F-597
F-598
F-599
F-600
F-601
F-602
F-603
F-604
F-605
F-606
F-607
F-608
F-609
F-610
F-611
F-612
F-613
F-614
F-615
F-616
F-617
F-618
F-619
F-620
F-621
F-622
F-623
F-624
F-625
F-626
F-627
F-628
F-629
F-630
F-631
F-632
F-633
F-634
F-635
F-636
F-637
F-638
F-639
F-640
F-641
F-642
F-643
F-644
F-645
F-646
F-647
F-648
F-649
F-650
F-651
F-652
F-653
F-654
F-655
F-656
F-657
F-658
F-659
F-660
F-661
F-662
F-663
F-664
F-665
F-666
F-667
F-668
F-669
F-670
F-671
F-672
F-673
F-674
F-675
F-676
F-677
F-678
F-679
F-680
F-681
F-682
F-683
F-684
F-685
F-686
F-687
F-688
F-689
F-690
F-691
F-692
F-693
F-694
F-695
F-696
F-697
F-698
F-699
F-700
F-701
F-702
F-703
F-704
F-705
F-706
F-707
F-708
F-709
F-710
F-711
F-712
F-713
F-714
F-715
F-716
F-717
F-718
F-719
F-720
F-721
F-722
F-723
F-724
F-725
F-726
F-727
F-728
F-729
F-730
F-731
F-732
F-733
F-734
F-735
F-736
F-737
F-738
F-739
F-740
F-741
F-742
F-743
F-744
F-745
F-746
F-747
F-748
F-749
F-750
F-751
F-752
F-753
F-754
F-755
F-756
F-757
F-758
F-759
F-760
F-761
F-762
F-763
F-764
F-765
F-766
F-767
F-768
F-769
F-770
F-771
F-772
F-773
F-774
F-775
F-776
F-777
F-778
F-779
F-780
F-781
F-782
F-783
F-784
F-785
F-786
F-787
F-788
F-789
F-790
F-791
F-792
F-793
F-794
F-795
F-796
F-797
F-798
F-799
F-800
F-801
F-802
F-803
F-804
F-805
F-806
F-807
F-808
F-809
F-810
F-811
F-812
F-813
F-814
F-815
F-816
F-817
F-818
F-819
F-820
F-821
F-822
F-823
F-824
F-825
F-826
F-827
F-828
F-829
F-830
F-831
F-832
F-833
F-834
F-835
F-836
F-837
F-838
F-839
F-840
F-841
F-842
F-843
F-844
F-845
F-846
F-847
F-848
F-849
F-850
F-851
F-852
F-853
F-854
F-855
F-856
F-857
F-858
F-859
F-860
F-861
F-862
F-863
F-864
F-865
F-866
F-867
F-868
F-869
F-870
F-871
F-872
F-873
F-874
F-875
F-876
F-877
F-878
F-879
F-880
F-881
F-882
F-883
F-884
F-885
F-886
F-887
F-888
F-889
F-890
F-891
F-892
F-893
F-894
F-895
F-896
F-897
F-898
F-899
F-900
F-901
F-902
F-903
F-904
F-905
F-906
F-907
F-908
F-909
F-910
F-911
F-912
F-913
F-914
F-915
F-916
F-917
F-918
F-919
F-920
F-921
F-922
F-923
F-924
F-925
F-926
F-927
F-928
F-929
F-930
F-931
F-932
F-933
F-934
F-935
F-936
F-937
F-938
F-939
F-940
F-941
F-942
F-943
F-944
F-945
F-946
F-947
F-948
F-949
F-950
F-951
F-952
F-953
F-954
F-955
F-956
F-957
F-958
F-959
F-960
F-961
F-962
F-963
F-964
F-965
F-966
F-967
F-968
F-969
F-970
F-971
F-972
F-973
F-974
F-975
F-976
F-977
F-978
F-979
F-980
F-981
F-982
F-983
F-984
F-985
F-986
F-987
F-988
F-989
F-990
F-991
F-992
F-993
F-994
F-995
F-996
F-997
F-998
F-999
F-1000
SU-1
SU-2
SU-3
SU-4
SU-5
SU-6
SU-7
SU-8
SU-9
SU-10
SU-11
SU-12
SU-13
SU-14
SU-15
SU-16
SU-17
SU-18
SU-19
SU-20
SU-21
SU-22
SU-23
SU-24
SU-25
SU-26
SU-27
SU-28
SU-29
SU-30
SU-31
SU-32
SU-33
SU-34
SU-35
SU-36
SU-37
SU-38
SU-39
SU-40
SU-41
SU-42
SU-43
SU-44
SU-45
SU-46
SU-47
SU-48
SU-49
SU-50
SU-51
SU-52
SU-53
SU-54
SU-55
SU-56
SU-57
SU-58
SU-59
SU-60
SU-61
SU-62
SU-63
SU-64
SU-65
SU-66
SU-67
SU-68
SU-69
SU-70
SU-71
SU-72
SU-73
SU-74
SU-75
SU-76
SU-77
SU-78
SU-79
SU-80
SU-81
SU-82
SU-83
SU-84
SU-85
SU-86
SU-87
SU-88
SU-89
SU-90
SU-91
SU-92
SU-93
SU-94
SU-95
SU-96
SU-97
SU-98
SU-99
SU-100
MiG-1
MiG-2
MiG-3
MiG-4
MiG-5
MiG-6
MiG-7
MiG-8
MiG-9
MiG-10
MiG-11
MiG-12
MiG-13
MiG-14
MiG-15
MiG-16
MiG-17
MiG-18
MiG-19
MiG-20
MiG-21
MiG-22
MiG-23
MiG-24
MiG-25
MiG-26
MiG-27
MiG-28
MiG-29
MiG-30
MiG-31
MiG-32
MiG-33
MiG-34
MiG-35
MiG-36
MiG-37
MiG-38
MiG-39
MiG-40
MiG-41
MiG-42
MiG-43
MiG-44
MiG-45
MiG-46
MiG-47
MiG-48
MiG-49
MiG-50
MiG-51
MiG-52
MiG-53
MiG-54
MiG-55
MiG-56
MiG-57
MiG-58
MiG-59
MiG-60
MiG-61
MiG-62
MiG-63
MiG-64
MiG-65
MiG-66
MiG-67
MiG-68
MiG-69
MiG-70
MiG-71
MiG-72
MiG-73
MiG-74
MiG-75
MiG-76
MiG-77
MiG-78
MiG-79
MiG-80
MiG-81
MiG-82
MiG-83
MiG-84
MiG-85
MiG-86
MiG-87
MiG-88
MiG-89
MiG-90
MiG-91
MiG-92
MiG-93
MiG-94
MiG-95
MiG-96
MiG-97
MiG-98
MiG-99
MiG-100
F-1
F-2
F-3
F-4
F-5
F-6
F-7
F-8
F-9
F-10
F-11
F-12
F-13
F-14
F-15
F-16
F-17
F-18
F-19
F-20
F-21
F-22

TABLE OF CONTENTS

INTRODUCTION OF THE OWNER'S MANUAL

1. HANDLING PRECAUTIONS 1
2. PREVENTION OF COUNTERFEITING AND CONVERSION 2
3. PRECAUTIONS CONCERNING THE PLACE OF INSTALLATION 3
4. SAFETY MEASURES 4
5. NAME OF PARTS ..... 5~ 6
6. REMOVING THE COIN CHUTE TOWER 7
7. REMOVING THE MONOCOQUE ..... 8~ 9
8. SW UNIT 10
9. AC UNIT 11
10. CRANK UNIT'S VR ADJUSTMENT 12
11. REMOVING THE MECHANISM UNIT AND MOTOR ..... 13~14
12. ADJUSTING THE MECHANISM LIMIT SWITCH 15
13. ADJUSTMENT OF THE V BELT AND REPLACING THE MOTOR BRUSH 16
14. REMOVING THE CONTROLLER 17
15. CONTROLLER'S VR ADJUSTMENT 18
16. REMOVING THE THROTTLE COVER AND THROTTLE UNIT 19
17. THROTTLE ADJUSTMENT 20
18. REPLACING THE THROTTLE SWITCH 21
19. CLEANING THE MONITOR AND REPLACING THE FLUORESCENT LAMP 22
20. 20 INCH MONITOR 23
21. PERIODICAL INSPECTION 24
22. TEST MODE ..... 25~34
23. DIP SWITCH SETTING 35
24. ROM LOCATIONS ..... 36~39
25. PARTS LIST ..... 40~90
26. WIRING DIAGRAM ..... 91~92

SPECIFICATIONS

• INSTALLATION SPACE	: 1200mm (47.3in) (W) × 1800mm (70.9in) (O)
• HEIGHT	: 1870mm (73.5in)
• POWER	: 680W
• C.R.T	: 20INCH
• WEIGHT	: 310kg (683.6lds.)

NOTE : Descriptions herin contained may be subject to improvement changes without notice.

INTRODUCTION OF THE OWNER'S MANUAL

SEGA ENTERPRISES, LTD., supported by its high electronic technology of LSIs, microprocessors, etc. and a wealth of experience, has for more than 30 years been supplying various innovative and popular game machines to the world market. This OWNER'S manual is intended to provide detailed comments together with all the necessary information covering the operation in general of electronic assemblies, electromechanicals servicing control, spare parts, etc. as regards the G-L.O.C a new SEGA product. The manual is intended for those who have knowledge of electricity and technical expertise especially in ICs, CRTs, microprocessors, etc. Carefully read so as to acquire sufficient knowledge before working on the machine. Should there be a malfunction, non-technical personnel should under no circumstance touch the interior system.

1. HANDLING PRECAUTIONS

When installing or inspecting, be very careful of the following points and pay attention to ensure that the player can enjoy the game safely.

- o Be sure to turn the power off before working on the machine.
- o To insert or pull out the plug quickly is dangerous.
- o It is necessary to make sure that the power cord or the grounding wire is not exposed on the road, etc. in a manner so as to be dangerous. Make sure that grounding connections are made safely at the position where so specified.
- o Do not use any fuse that does not meet the specified rating.
- o Make complete connections for the IC board and other connecters. Insufficient insertion is very dangerous.

Also, for the IC board circuit inspections, only the logic tone is allowed. The use of a tester is not permitted, so be careful in this regard. After confirming that there are no irregularities, turn the power ON.

2. PREVENTION OF COUNTERFEITING AND CONVERSION

LABELLING

To prevent counterfeits and conversions, the following labels are put on all the SEGA products. When handling such goods, be sure to confirm the labels. They are used to prevent illegal acts such as the unauthorized copying of the products and the printed circuit boards thereof or carrying on business by manufacturing similar merchandise or by converting, selling or using such products or printed circuit boards.

ORIGINAL SEAL

The following seal is put on the machines manufactured by SEGA.



LICENSE SEAL

The following seal is put on the kits, such as the printed circuit boards, of SEGA products.



COPYRIGHT NOTICE

This SEGA product has the copyright notice as follows:

© SEGA 1990

This signifies that this work was disclosed in 1990 and is the property of SEGA ENTERPRISES, LTD.

3. PRECAUTIONS CONCERNING THE PLACE OF INSTALLATION

THE G-L.O.C. DELUXE TYPE is an indoor game machine. Install in environmental temperature from 5°C (41°F) to 40°C (104°F). Absolutely do not install it outside. Even indoors, avoid installing in places mentioned below so as to ensure proper usage:

- o Places subject to rain or water leakage, or condensation due to humidity.
- o In the proximity of an indoor swimming pool and/or shower.
- o Places subject to direct sunlight.
- o Places subject to heat sources from heating units, etc., or hot air.
- o Vicinity of highly inflammable/volatile chemicals or hazardous matter.
- o Sloped surfaces.
- o Vicinity of anti-disaster facilities such us fire exits and fire extinguishers.
- o Places subject to any type of violent impact.
- o Dusty places.

INSTALLATION OF THE G-L.O.C. DELUXE TYPE

◎ Use an independent outlet for the power supply.
(The breaker may break when the maximum current is consumed if the outlet is simultaneously used for the power source of other machines.)

◎ When using an extension cord, use one with a specified rating or higher.

	AC 120V	AC 220V	AC 240V
RATED CURRENT	10.5 A	6.7 A	6.9 A

For installation, make doubly sure that attention be paid to the above points.

4. SAFETY MEASURES

In order to ensure the safety of the customers while playing, this machine is designed in a manner so that any dangerous situation can be evaded. When playing, be sure to use the seat belt.

① EMERGENCY STOP button:

When this is pushed during game play, the seat position returns as it was at the time of starting and the cabinet movements stop until GAME OVER.

② Photosensor:

When the photosensor detects a certain object, the seat first becomes level and then will be raised upwards. If it no longer detects the object, the cabinet starts moving after several seconds.

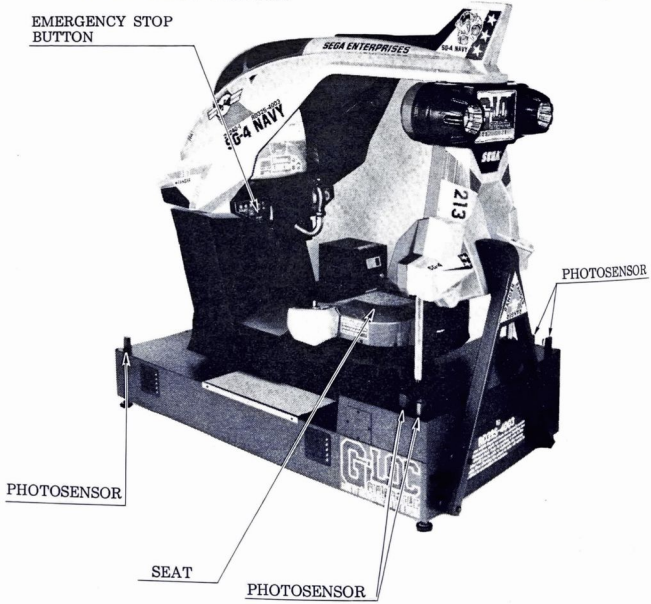

5. NAME OF PARTS



HOOD
GLC−1002

20 INCH MONITOR
(200−5090
200−5095)

CONTROLLER
GLC−2000

COIN CHUTE TOWER
GLC−0500

PILLAR
GLC−0003

THROTTLE
GLC−2100

GAME BD G−L.O.C.
834−7300−03
834−7300−04
834−7300−05
} U.S.A.
834−7300−06
834−7300−07
834−7300−08

MECHANISM BASE
GLC−3001

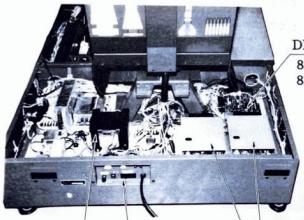

DRIVE BD
839−0340
839−0340−01

POWER SUPPLY
GLC−4000

AC UNIT
GLC−3300

MOTOR DRIVER
400−5117

TOOLS & ACCESSORIES

PART NO.	Q/U	DESCRIPTION
008-0410	10	TMP PRF SCR TH M4×10
008-0420	5	TMP PRF SCR TH M4×20
008-0510	10	TMP PRF SCR TH M5×10
008-0520	5	TMP PRF SCR TH M5×20
090-0044	1	GREASE NET 300g
125-0011	1	COMPRESSION SPRING
220-5130	1	VOL CONT B-5K OHM
421-6094	2	STICKER CAUTION ENG
421-6482-01	2	STICKER CAUTION ENG
421-7048	1	STICKER CAUTION KEEP HANDS OFF
509-0058	1	SWITCH MICRO TYPE
509-5319	1	SW PUSH BUTTON 1T YELLOW
509-5324-01	1	SW PB 1M RED W/O RING & CASE
540-0006-01	1	WRENCH FOR TAMP PRF SCR M4
540-0007-01	1	WRENCH FOR TAMP PRF SCR M5
540-0015-01	1	WRENCH FOR TAMP PRF SCR M6
540-0027	1	L-WRENCH FOR HEX SOC 2mm
601-6150	4	BRUSH FOR MOTOR
TX-1317	2	EXT. SPRING
TX-1330	2	EXT. SPRING
NO. 1027	1	SCHEMATIC DIAGRAM SEGA G-L.O.C. DX.

6. REMOVING THE COIN CHUTE TOWER

① Take out the CASHBOX and remove the 4 HEXAGON BOLTS.

② Disconnect the 4 CONNECTORs (Yellow 4P, Red 9P, Red 6P, Brown 2P)

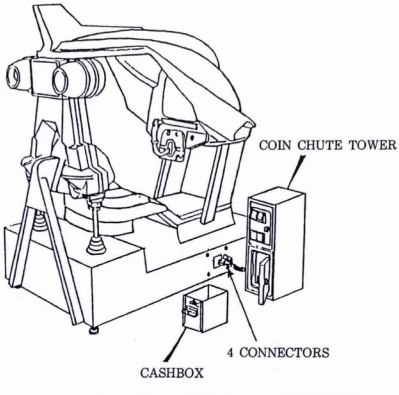

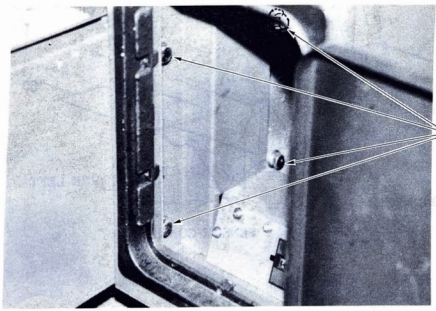

7. REMOVING THE MONOCOQUE

① Take off COVER LEFT and COVER RIGHT by removing TAMPERPROOF SCREWS M4 X 10 (9 in all).
At this time, disconnect the SENSOR CONNECTOR (Yellow 3P, one each).

② Disconnect the 9 CONNECTORS.

③ Take off the NUT (M22).

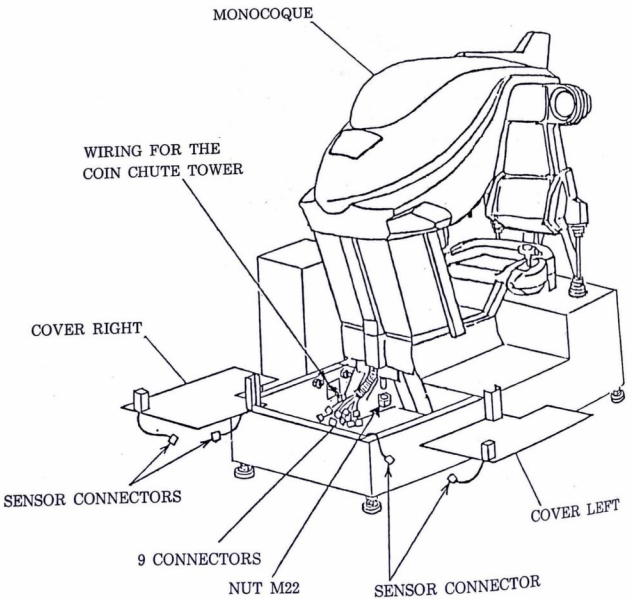

④ Remove the PILLAR by taking off the 4 HEXAGON BOLTS black (M10 X 80).

⑤ Remove the GUIDE ROLLER by taking off the NUT (M10).

⑥ Remove SEAT REAR by taking off the 8 TAMPERPROOF SCREWS (M4 X 12). Remove 4 each of FLATHEAD SCREWS black (M4 X 16) which secure the right and left BOOTS.

⑦ Take off one each (left, right) NUT (M10) which fasten the ROD END, and the MONOCOQUE can be removed.

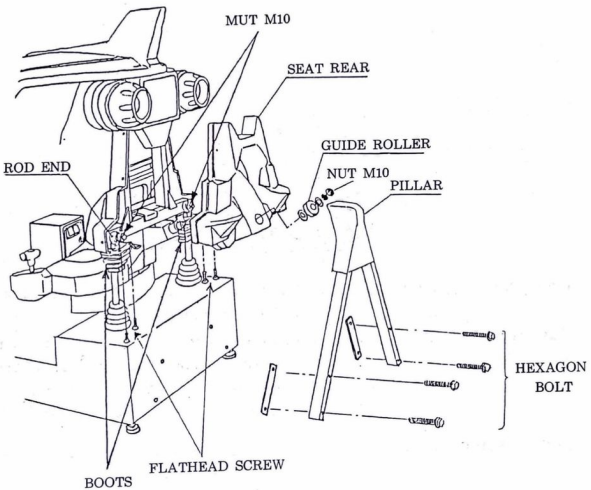

8. SW UNIT

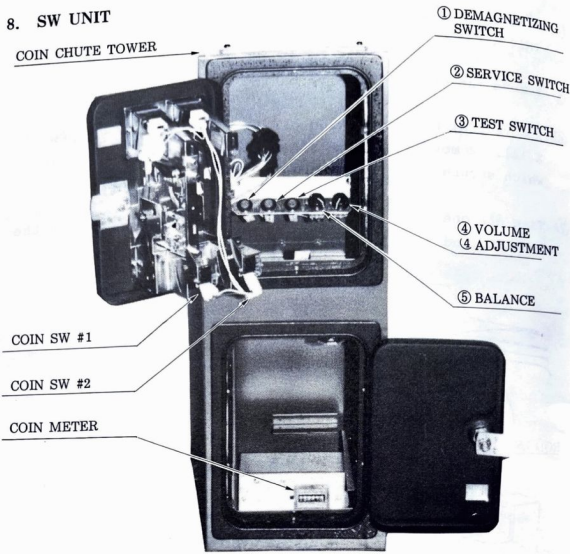

① DEMAGNETIZING SWITCH ..... Used for removing the on-screen color uneveness.

②SERVICE SWITCH ..... Used for the purpose of servicing and increasing the credits without registering on the meter (this allows you to check the game).

③TEST SWITCH ..... For the operation of this switch, see SELF-TEST.

④VOLUME ADJUSTMENT ..... Used for adjusting the volume of the SPEAKER.

⑤ BALANCE ..... Used for adjusting the balance.

9. AC UNIT

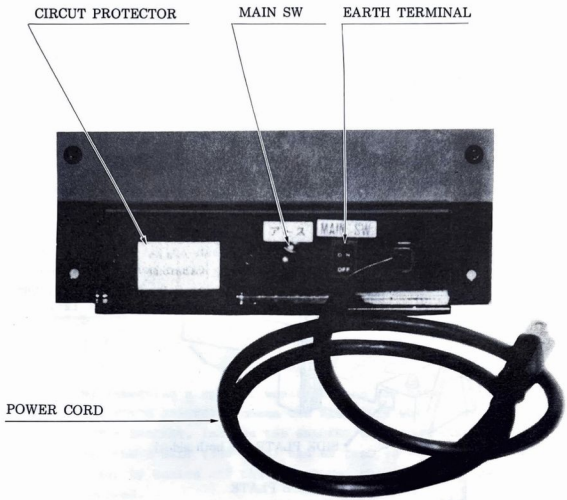

* When machine malfunctioning occurs, the CIRCUIT PROTECTOR to goes OFF and game play will no longer be possible.

First remove the cause of such malfunction and then restore the CIRCUIT PROTECTOR back to its original state.

10. CRANK UNIT'S VR ADJUSTMENT

In the STANDBY condition with no one on the machine, cause the MOTOR TEST mode of the SELF-TEST (refer to TEST MODE) to appear, and the CRANK UNIT'S V.R. value will be displayed. At this time, make adjustments to 10H～20H.
When adjustments are needed, remove the base's SIDE PLATE (one each on both sides) by taking off the 4 TAMPERPROOF SCREWS (M4 X 10).

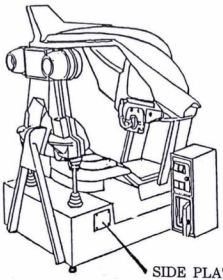

SIDE PLATE (on both sides)

Loosen the 2 PANHEAD SCREWS (M4 X 12) to adjust the installation position of GEAR 60. Backlash adjustment can be made at the fixed position of the BRACKET's V.R. by loosening the 2 PANHEAD SCREWs (M6 X 12).

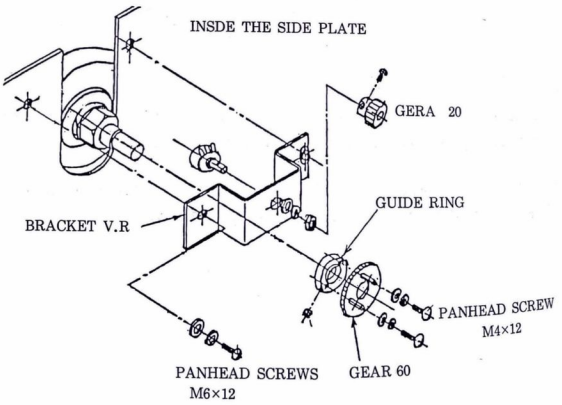

11. REMOVING THE MECHANISM UNIT AND MOTOR

① Take off COVER CENTER LEFT (GLC-3005) or COVER CENTER RIGHT (GLC-3006).

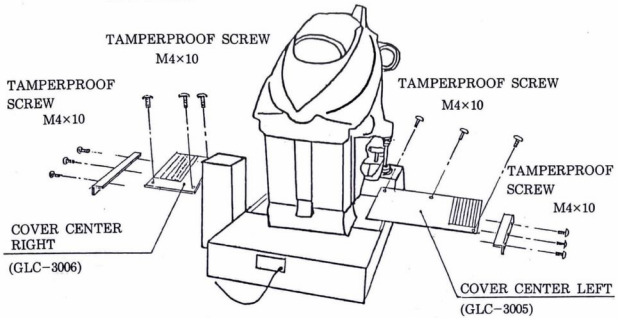

② By inserting a ratchet wrench in the gap between the BASE and MOTOR BRACKET, loosen the M10 BOLTs which fasten the MOTOR BRACKET, incline the BRACKET to the MECHANISM side, and the V BELT (350-5198) can be removed from the PULLEY. Also, by taking off the M10 BOLTs, the MOTOR UNIT can be removed.

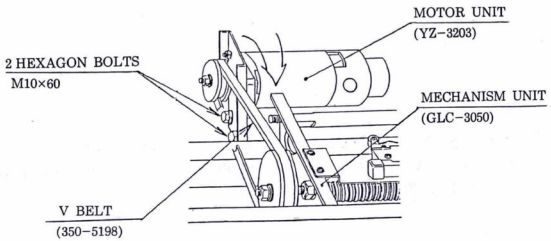

③ Take off the HEXAGON NUT (M8) which fastens the ROD END to the MOVING PLATE (GLC-3052)

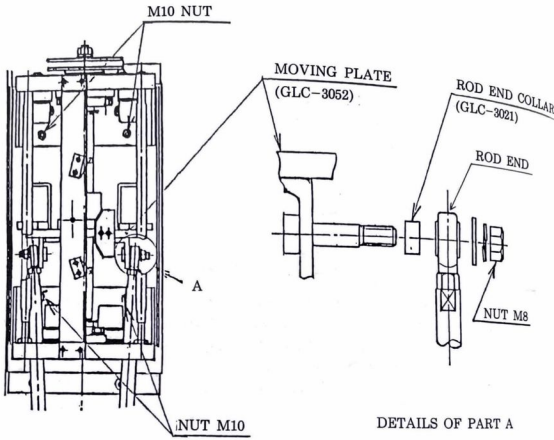

④ Finally, take off the 4 (M10) NUTs which fasten the MECHANISM UNIT and disconnect the CONNECTOR to remove the MECHANISM UNIT.

12. ADJUSTING THE MECHANISM LIMIT SWITCH

Make adjustment of the LIMIT SWITCH in a manner so that it goes ON when the MOVING PLATE (GLC-3052) comes to a position 6～9 mm before RUBBER STOPPER (601-5472).

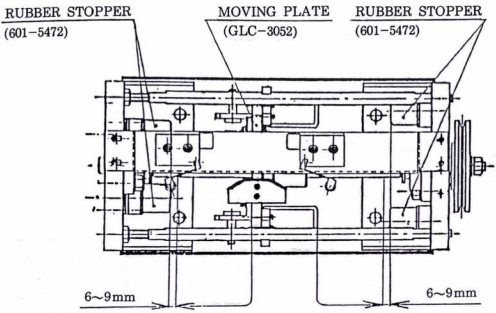

13. ADJUSTMENT OF THE V BELT AND REPLACING THE MOTOR BRUSH

Power for this machine is transmitted by the V belt. The belt, if it slips or is torn, will not work properly and also is very dangerous. Regularly check as to the tension, wear, and deterioration of the belt and make the necessary adjustments and replacements ahead of time.

ADJUSTMENT OF BELT TENTION

* Before making adjustments of the belt tension, be sure that the power is OFF.

For belt tension adjustments, make sure that the belt has an approximate slack of 10 mm when applying a forefinger against the middle part in between the 2 pulleys.

o Loosen the 2 HEXAGON BOLTS which fasten the MOTOR BRACKET, adjust the BRACKET'S fixed position and make adjustment of the BELT.

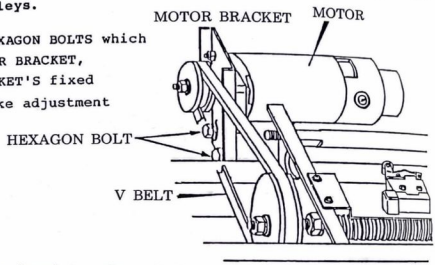

Replace the motor brush as shown below.

Normally, replacement once in six months is recommended. Make sure that both the 2 brushes are replaced.

① To remove the cap, turn it by using a driver, etc.

② Take the brush out for replacement.

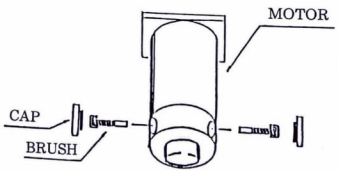

o Replace the brush when it wears out up to this line.

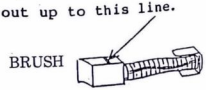

14. REMOVING THE CONTROLLER

By taking off the 2 TAMPERPROOF SCREWS FRONT (M6 X 35) and the 4 HEXAGON BOLTS UNDERSIDE (M8 X 35), pull the CONTROLLER toward you and remove it by disconnecting the 4 CONNECTORs (white 4P, yellow 3P, yellow 4P and green 1P).

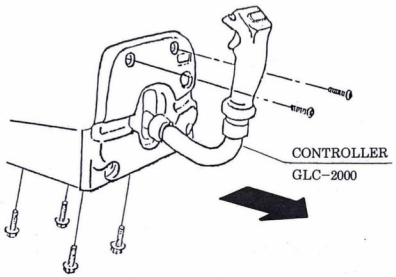

When making the V.R. adjustment, however, it is not necessary to disconnect the CONNECTORs.

15. CONTROLLER'S VR ADJUSTMENT

First, have the "INPUT TEST" of the TEST MODE appear on the monitor screen (refer to the explanations of the SWITCH UNIT).

① Adjustments in horizontal direction can be made by loosening SCREWS "C" of GEAR "C." With the GRIP being positioned in the center, make adjustment so that the monitor display will indicate 80H ± 2H.
Then, with the GRIP being inclined to the right, make adjustment to C0H or higher, and with the GRIP being inclined to the left, make adjustment to 40H or lower.
Backlash adjustment can be made by loosening NUTs "A" which fasten the BRACKET of V.R. "A" and by moving the BRACKET position up and down.

② With the CONTROLLER being installed in the machine and its installation angle as is, adjustments in the vertical direction can be made by loosening SCREWS "D" which fasten GEAR "D." Fasten when the monitor display shows 80H ± 2H.
Then, with the GRIP being lifted up, make adjustment to B8H or higher, and with the GRIP being lowered, to 45H or lower.
Make backlash adjustments by loosening NUTs "B" which fasten the BRACKET of V.R. "B."

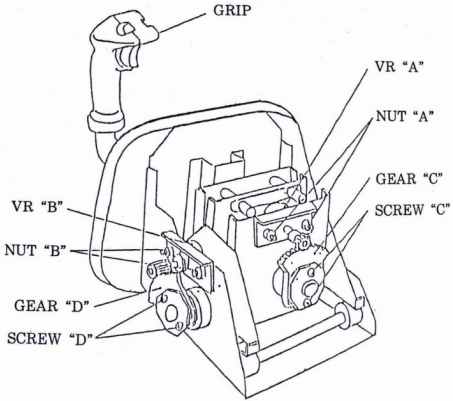

16. REMOVING THE THROTTLE COVER AND THROTTLE UNIT

Removing the THROTTLE COVER

The THROTTLE COVER can be removed by taking off a total of 7 TAMPERPROOF SCREWS, i.e., 3 TAMPERPROOF SCREWS (M4 X 10) on the side of THROTTLE COVER (GLC-2109) and the 4 TAMPERPROOF SCREWS (M4 X 16) of the DESIGN PLATE (GLC-2114).

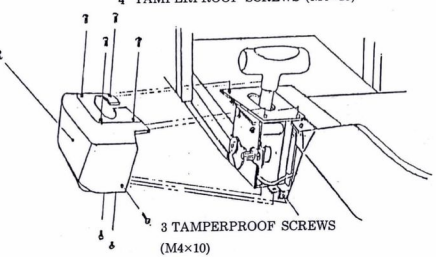

Removing the THROTTLE UNIT

The THROTTLE UNIT can be removed by taking off the 6 PANHEAD SCREWS (M5 X 10) and by disconnecting the CONNECTORS (2P RED, 3P RED)

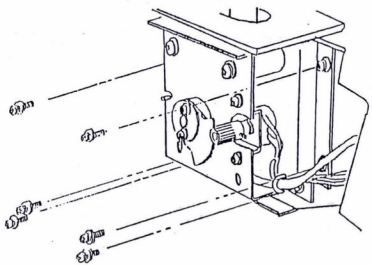

17. THROTTLE ADJUSTMENT

With the THROTTLE LEVER in an as is free condition, display the screen in the SELF-TEST mode

At this time, if the variable value is 30H (+0~-4H), it is OK.

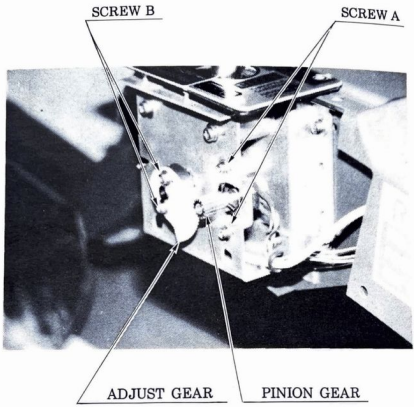

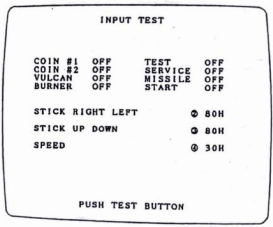

ADJUSTMENT PROCEDURE

1) Loosen SCREW A that fasten the V.R. BRACKET resulting in the BRACKET moving and disengaging the PINION GEAR and ADJUST GEAR.

2) At this time, turn the V.R. shaft and make adjustments in a manner so that the variable value 3 becomes 30H(+0~-4H).

3) In the case where fine adjustments are necessary, loosen the ADJUST GEAR'S SCREW B and make adjustment.

18. REPLACING THE THROTTLE SWITCH

In the INPUT TEST mode, if the BURNER does not go ON even when the THROTTLE SWITCH is pushed, replace the THROTTLE SWITCH by using the following procedure:

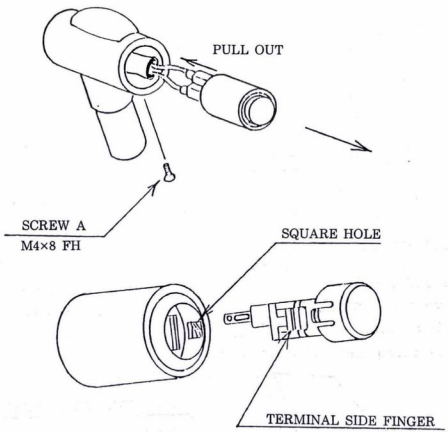

REPLACING PROCEDURE

1) Take off SCREW A which secures the SWITCH COLLAR.

2) Pull out the PUSH SWITCH together with the SWITCH COLLAR.

3) Pull out the PUSH SWITCH'S FASTON and while pushing in the terminal side's FINGER, remove the PUSH SWITCH.

4) Install the SPARE PARTS (509-5324-01) in the direction as shown.

5) Assemble it in the procedure opposite from the above.

NOTE: After replacing the switch, if the BURNER in the INPUT TEST does not go ON, then, check for wiring, CONNECTORS, etc.

19. CLEANING THE MONITOR AND REPLACING THE FLUORESCENT LAMP

Cleaning the MONITOR

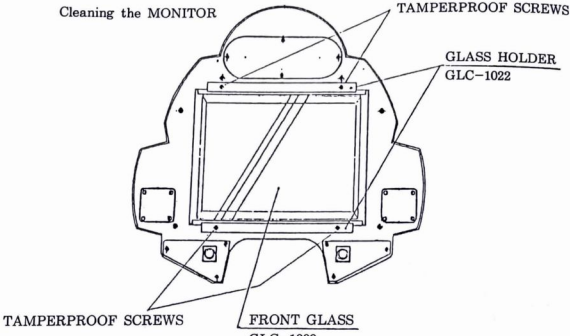

Take off 2 TAMPERPROOF SCREWS (M4 X 30) from each side and remove the 2 GLASS HOLDERS. The FRONT GLASS can be removed to clean the monitor's CRT.

Replacing the FLUORESCENT LAMP

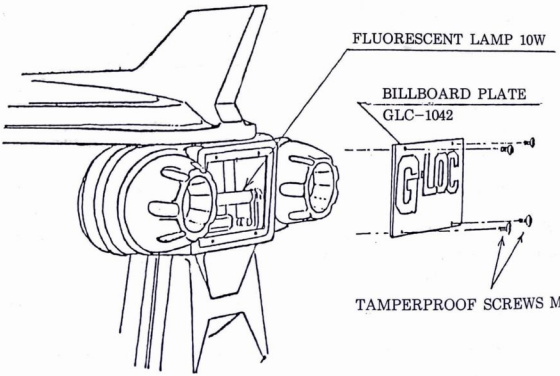

Take off the 4 TAMPERPROOF SCREWS (M4 X 12) and remove the BILLBOARD PLATE to replace the FLUORESCENT LAMP.

20. 20 INCH MONITOR

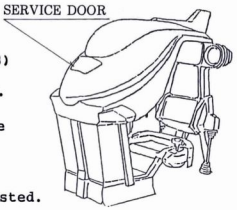

Take off the SERVICE DOOR (GLC-1028) from the front portion of the HOOD.

It can be removed by taking off the 8 TAMPERPROOF SCREWS (M4 X 12).

This enables the monitor to be adjusted.

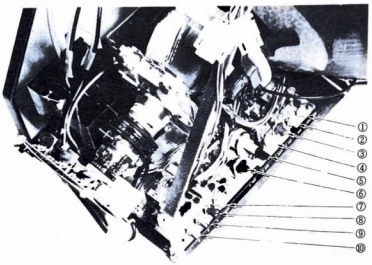

① V. HOLD
② V. SIZE
③ V. POSI
④ H. HOLD
⑤ H. SIZE
⑥ H. POSITION
⑦ BRIGHT
⑧ B. GAIN
⑨ G. GAIN
⑩ R. GAIN

21. PERIODICAL INSPECTION

Periodical greasing of the mobile parts are required.
Apply grease in accordance with the following instructions:
Normally, replacement once in 2 months is recommended.

Lubricate the MECHANISM UNIT and the CRANK UNIT as per the illustration.

Ⓐ ROD END

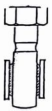

Apply grease to the surfaces of the inner ring (diagonally lined portion as per the illustration).

Ⓑ BALL SCREW

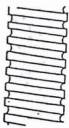

Apply grease to the screw surfaces by hand or by using a spatula.

Ⓒ ADJUST SHAFT



Apply grease to the ADJUST SHAFT

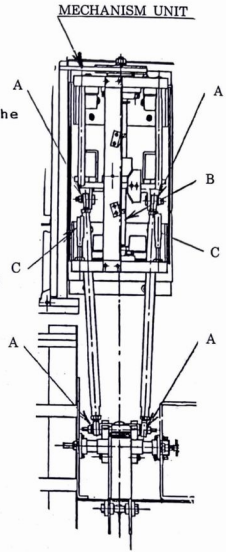

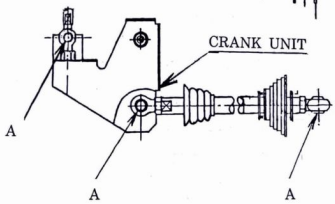

When lubricating, so as not to cause any malfunction, make sure that no foreign matter such as dust, etc. gets into the grease.

22. TEST MODE

This test mainly checks the operation of the game PCB's, discovers defects if any, and also enables the monitor colors to be adjusted and the audio to be checked, etc.

1. Selection of TEST ITEMS

(1) Push the TEST SW to cause the following TEST ITEM MENU to appear:

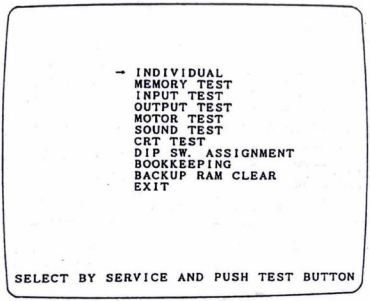

(2) By pushing the SERVICE button, bring the arrow mark "→" to the desired item and press the TEST button.

(3) When the test has been completed, bring "→" to EXIT and push the TEST button.

Bring "→" to "INDIVIDUAL" and push the TEST button to change it to "CONTINUE."
Bringing "→" to "CONTINUE" and pushing the TEST button without pressing the SERVICE button will change the screen sequentially.

2. MEMORY TEST

Checks the PCB's MEMORY ICs.
When the IC is in good operating condition, "GOOD" will be indicated. If there exists any malfunctioning of the IC's, "BAD" will be indicated.

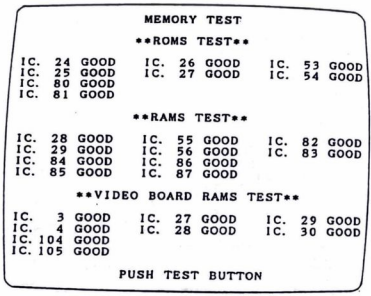

3. INPUT TEST

Indicates the condition of each switch and POTENTIOMETER.

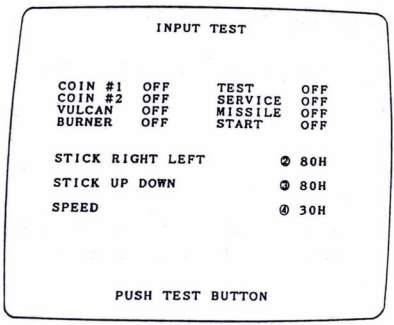

① Indicates the condition of each switch. Operate each switch. When the "OFF" condition is changed to "ON," the corresponding switch is in good working order.

② It is satisfactory if data values increase when the handle grip is moved to the right, decrease when it is moved to the left, and indicate "80H" when released.



③ It is satisfactory if data values increase when the handle grip is moved upward, decrease when it is moved downward, and indicate "80H" when released.

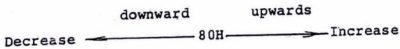

④ It is satisfactory if the data values increase when the THROTTLE LEVER is moved forward and indicate "30H" when released.

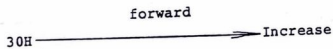

4. OUTPUT TEST

THE START LAMP and DANGER LAMP will flash.

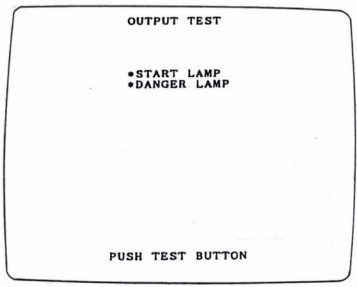

5. MOTOR TEST

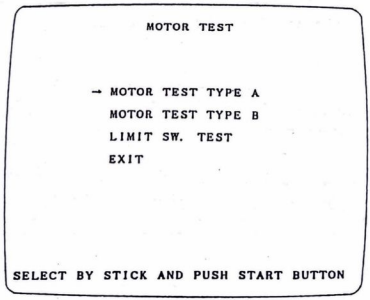

Moving the handle causes the "→" to move.
Bring the "→" to the desired item and press the START button.

(1). MOTOR TEST TYPE A

The cabinet can be moved by using the handle grip.
Select the desired motor speed by operating the handle grip's missile button.
By using the handle grip, press the VULCAN SW. to move the cabinet up to the position which was specified.

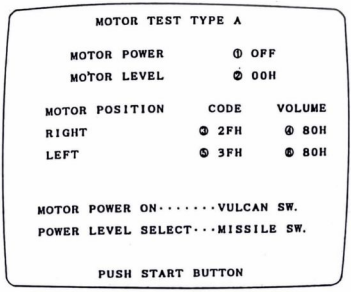

① Press the Vulcan SW. to cause the display to go "ON," and the cabinet will start to move.

② Motor Speed
Can be selected from among the 8 levels (00H～07H).

③ This is the Communi cations Code to drive the right-hand motor. By moving the handle, if the value varies, it is satisfactory.

④ Present position of the right-hand motor (the right-hand V.R. value)

⑤ This is the Communications Code to drive the left-hand motor. By moving the handle, if the value varies, it is satisfactory.

⑥ Present position of the left-hand motor (the left-hand V.R. value)

(2). MOTOR TEST TYPE B

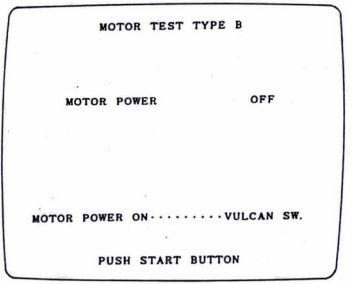

Pressing the Vulcan SW. causes the cabinet to move up and down, thus enabling each part to be checked. If there is any malfunctioning, that particular portion will be displayed on the screen.

(3)、LIMIT SW. TEST

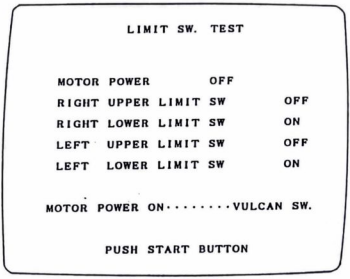

Press the Vulcan SW. to cause the cabinet to move up and down, thus enabling each limit switch to be checked.

6. SOUND TEST

Moving the handle causes the "→" to move.
Bring the "→" to the desired item and press the START button.

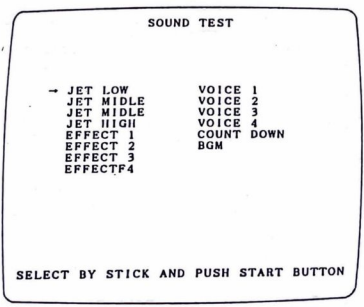

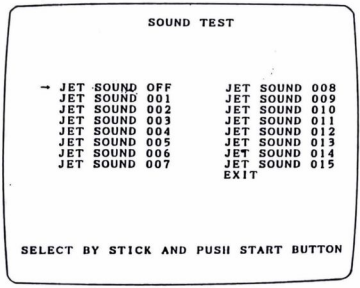

Press the START button to cause the next screen to appear.

By using the handle, move the "→" and press the START button to perform the sound check.

Bring the "→" to "EXIT" and press the START button to return the screen to the previous one.

7. **CRT TEST**

Monitor Adjustment Check

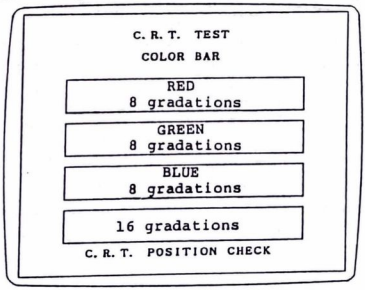

① Checks the C.R.T. position. Make sure that the on-screen corners are consistent and then make size adjustments.

② RGB color check

(The color becomes brighter from the right to the left.)

③ Brightness check

[Becomes brighter from the right (black) to the left (white).]

8. DIP SW ASSIGNMENT

The following shows the assignment of DIP SW A and B.

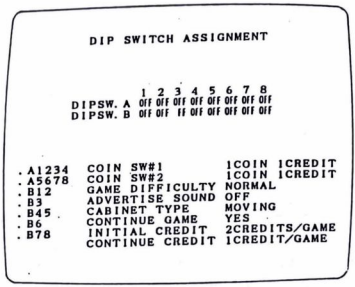

DIP SW A : Setting the COIN SW

DIP SW B : Setting the game difficulty, etc.

For details, refer to DIP SWITCHES.

9. BOOKKEEPING

Displays such data as the number of game plays, game play time, etc. Push the SERVICE button to cause the following screen to appear :

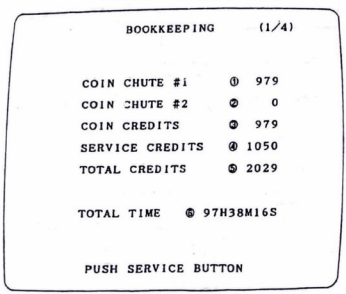

① Number of coins put in COIN CHUTE 1.
② Number of coins put in COIN CHUTE 2.
③ Number of coin credits.
④ Number of credits obtained by using the SERVICE SW.
⑤ Sum of ③ and ④
⑥ Total time during which the machine was energized.

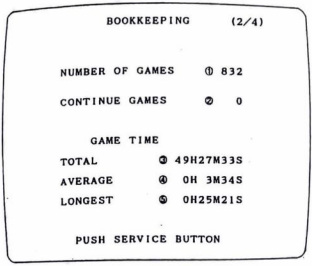

Displays the data of all courses and each course.

Screen (2/4)
Total of all courses

Screen (3/4)
BEGINNER
MEDIUM

Screen (4/4)
EXPERT

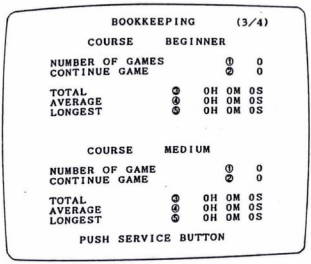

① Total number of game plays

② Total number of CONTINUE game plays

③ Total game play time

④ Average game play time

⑤ Longest game play time

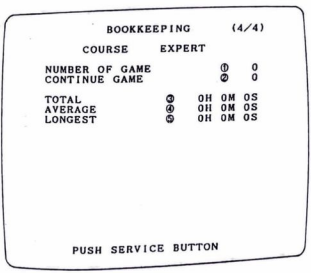

10. BACKUP RAM CLEAR

The BOOKKEEPING data can be cleared. When clearing, bring "→" to "YES" and when not clearing, to "NO," by using the SERVICE SW, and then push the TEST button

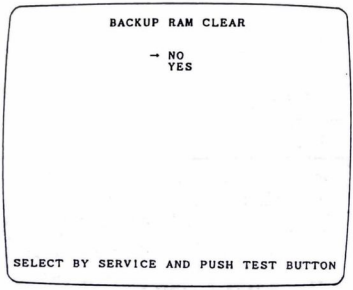

23. DIP SWITCH SETTING

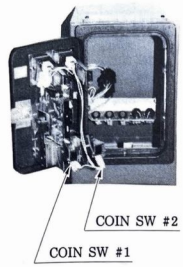

COIN/CREDIT OPTION SW. SETTING

DIP SW. A

		1	2	3	4	5	6	7	8
1 COIN	1 CREDIT	OFF	OFF	OFF	OFF	OFF	OFF	OFF	OFF
1 COIN	2 CREDITS	ON	OFF	OFF	OFF	ON	OFF	OFF	OFF
1 COIN	3 CREDITS	OFF	ON	OFF	OFF	OFF	ON	OFF	OFF
1 COIN	4 CREDITS	ON	ON	OFF	OFF	ON	ON	OFF	OFF
1 COIN	5 CREDITS	OFF	OFF	ON	OFF	OFF	OFF	ON	OFF
1 COIN	6 CREDITS	ON	OFF	ON	OFF	ON	OFF	ON	OFF
2 COINS	1 CREDIT	OFF	ON	ON	OFF	OFF	ON	ON	OFF
3 COINS	1 CREDIT	ON	ON	ON	OFF	ON	ON	ON	OFF
4 COINS	1 CREDIT	OFF	OFF	OFF	ON	OFF	OFF	OFF	ON
2 COINS	3 CREDITS	ON	OFF	OFF	ON	ON	OFF	OFF	ON
2 COINS	1 CREDIT								
4 COINS	2 CREDITS	OFF	ON	OFF	ON	OFF	ON	OFF	ON
5 COINS	3 CREDITS								
6 COINS	4 CREDITS								
2 COINS	1 CREDIT	ON	ON	OFF	ON	ON	ON	OFF	ON
4 COINS	3 CREDITS								
1 COIN	1 CREDIT								
2 COINS	2 CREDITS								
3 COINS	3 CREDITS	OFF	OFF	ON	ON	OFF	OFF	ON	ON
4 COINS	4 CREDITS								
5 COINS	6 CREDITS								
1 COIN	1 CREDIT								
2 COINS	2 CREDITS								
3 COINS	3 CREDITS	ON	OFF	ON	ON	ON	OFF	ON	ON
4 COINS	5 CREDITS								
1 COIN	1 CREDIT	OFF	ON	ON	ON	OFF	ON	ON	ON
2 COINS	3 CREDITS								
NOT USED		ON	ON	ON	ON	ON	ON	ON	ON
		COIN SW #1				COIN SW #2			

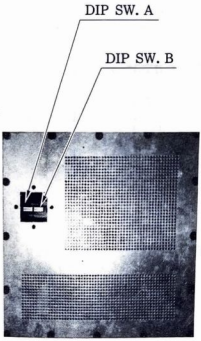

GAME OPTION SW. SETTING

DIP SW. B

		1	2	3	4	5	6	7	8
GAME DIFFICULTY	NORMAL	OFF	OFF						
	EASY	ON	OFF						
	HARD	OFF	ON						
	HARDEST	ON	ON						
ADVERTISE SOUND	OFF			OFF					
	ON			ON					
CABINET TYPE	MOVING				OFF	OFF			
	COCKPIT				ON	OFF			
	UPRIGHT				OFF	ON			
	SIT DOWN								
CONTINUE GAME	YES						OFF		
	NO						ON		
INITIAL CREDIT	CONTINUE								
2	1							OFF	OFF
3	2							ON	OFF
1	1							OFF	ON
4	3							ON	ON

24. ROM LOCATIONS

(1) 834 – 7300 –~ GAME BD G–L.O.C.

FOR U.S.A.		FOR EUROPE & ASIA	
834–7300–03	837–7301–01 CPU BD 837–7302 VIDEO BD	834–7300–06	837–7301–02 CPU BD 837–7302 VIDEO BD
834–7300–04	837–7301–01 CPU BD 837–7403 VIDEO BD	834–7300–07	837–7301–02 CPU BD 837–7403 VIDEO BD
834–7300–05	837–7301–01 CPU BD 837–7402 VIDEO BD	834–7300–08	837–7301–02 CPU BD 837–7402 VIDEO BD

837 – 7301 CPU BD G–L.O.C.

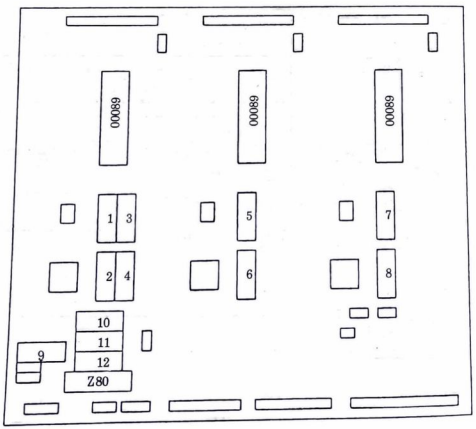

837 – 7302 VIDEO BD G–L.O.C.

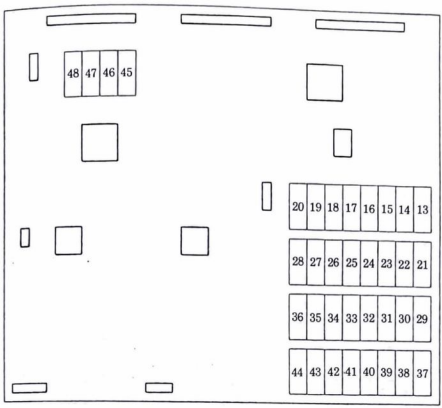

837 – 7402 VIDEO BD G–L.O.C.

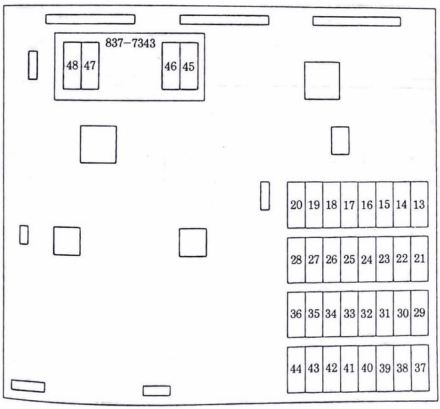

837 – 7403 VIDEO BD G–L.O.C.

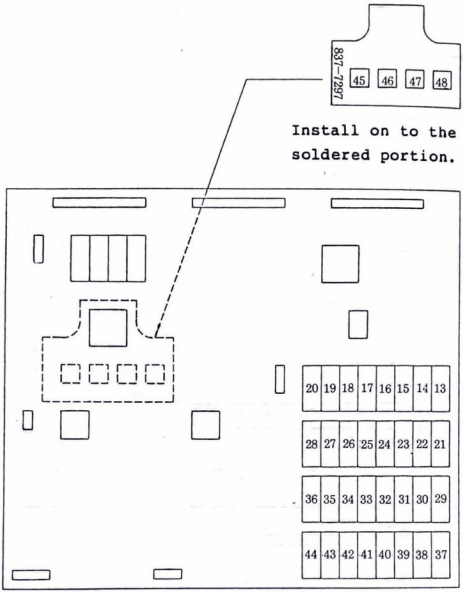

* This machine utilizes a game board comprised of the 837-7301 CPU BD and either one of the above-mentioned 3 video BDs.

834 – 7300 –~ GAME BD G-L.O.C.

834–7301–~ IC LOCATION			ROM NUMBER	MAIN WORK		
				CPU BD		
1	IC	24	EPR – 13169	MAIN PROGRAM FOR U.S.A.	1 M	834 7301–01
2	IC	25	EPR – 13170		1 M	
1	IC	24	EPR – 13171	MAIN PROGRAM FOR EXPORT	1 M	834 7301–02
2	IC	25	EPR – 13172		1 M	
3	IC	26	EPR – 13027	MAIN PROGRAM	1 M	COMMON USAGE
4	IC	27	EPR – 13028		1 M	
5	IC	53	EPR – 13029		1 M	
6	IC	54	EPR – 13030		1 M	
7	IC	80	EPR – 13031		1 M	
8	IC	81	EPR – 13032		1 M	
9	IC	102	EPR – 13033	SOUND PROG	512	
10	IC	105	MPR – 13034	SOUND DATA	4 M	
11	IC	106	MPR – 13035		4 M	
12	IC	107	MPR – 13036		4 M	
				VIDEO BD		
13	IC	60	MPR – 13041	OBJECT	4 M	837–7403 COMMON USAGE
14	IC	61	MPR – 13042		4 M	
15	IC	62	MPR – 13043		4 M	
16	IC	63	MPR – 13044		4 M	
17	IC	64	MPR – 13045		4 M	
18	IC	65	MPR – 13046		4 M	
19	IC	66	MPR – 13047		4 M	
20	IC	67	MPR – 13048		4 M	
21	IC	68	MPR – 13049		4 M	
22	IC	69	MPR – 13050		4 M	
23	IC	70	MPR – 13051		4 M	
24	IC	71	MPR – 13052		4 M	
25	IC	72	MPR – 13053		4 M	
26	IC	73	MPR – 13054		4 M	837–7402
27	IC	74	MPR – 13055		4 M	
28	IC	75	MPR – 13056		4 M	
29	IC	79	MPR – 13057		4 M	
30	IC	80	MPR – 13058		4 M	
31	IC	81	MPR – 13059		4 M	
32	IC	82	MPR – 13060		4 M	
33	IC	83	MPR – 13061		4 M	
34	IC	84	MPR – 13062		4 M	
35	IC	85	MPR – 13063		4 M	
36	IC	86	MPR – 13064		4 M	
37	IC	107	MPR – 13065		4 M	
38	IC	108	MPR – 13066		4 M	
39	IC	109	MPR – 13067		4 M	
40	IC	110	MPR – 13068		4 M	
41	IC	111	MPR – 13069		4 M	
42	IC	112	MPR – 13070		4 M	
43	IC	113	MPR – 13071		4 M	
44	IC	114	MPR – 13072		4 M	837–7302
45	IC	14	MPR – 13037	LINE OBJ	4 M	837–7302
46	IC	15	MPR – 13038		4 M	
47	IC	16	MPR – 13039		4 M	
48	IC	17	MPR – 13040		4 M	
837–7297				FLAT PIGGY		
45	IC	1	MPR – 13037 – F	LINE OBJ	4 M	837–7403
46	IC	2	MPR – 13038 – F		4 M	
47	IC	3	MPR – 13039 – F		4 M	
48	IC	4	MPR – 13040 – F		4 M	
837–7343				PIGY BD		
45	IC	14	MPR – 13037	LINE OBJ	4 M	837–7402
46	IC	15	MPR – 13038		4 M	
47	IC	16	MPR – 13039		4 M	
48	IC	17	MPR – 13040		4 M	

25. PARTS LIST

① TOP ASSY G-L.O.C. DX. (GLC-0000) (D-1/4)

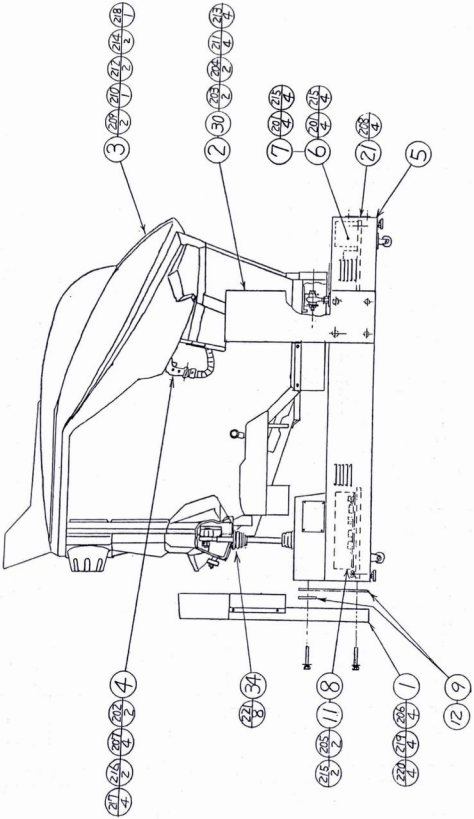

① TOP ASSY G-L.O.C. DX. (GLC-0000)

(D-2/4)

ITEM NO.	PART NO.	DESCRIPTION	NOTE
1	GLC-0001	ASSY PILLAR	
2	GLC-0500	ASSY COIN CHUTE TOWER	
3	GLC-1000	ASSY MONOCOQUE	
4	GLC-2000	ASSY CONTROLER	
5	GLC-3000	ASSY MECHANISM & BASE	
6	GLC-4000	ASSY PWR SPLY DX.	
7	GLC-4100	ASSY MOTOR DRIVER	
8	GLC-0002	ASSY SHIELD CASE	
9	GLC-0010	ADJUST PLATE A	
10	420-5935-03	OWNERS MANUAL DX. G-LOC DX. ENG.	
	834-7300-03/04/05	GAME BD G-LOC FOR USA	
	834-7300-06/07/08	GAME BD G-LOC FOR EXPORT	
12	GLC-0011	ADJUST PLATE B	
13	SGM-2675	POLYETHYLENE BAG 240×370	
14	SGM-3901	POLYETHYLENE COVER 1100×1750×1700	
15			
16	421-6594	STICKER SERIAL NO. INFO	
17	421-6709	STICKER SERVICE INSTR ENG	
18	421-6671	STICKER DANGER HIGH VOLTAGE	
19			
20			
21	117-5111	PLATE. ELEC. SPEC.	
22	421-5800-121	ORIGINAL SEAL G-LOC	
	1027	SCHEMATIC DIAGRAM SEGA G-LOC DX	

① TOP ASSY G-L.O.C. DX. (GLC-0000)

ITEM NO.	PART NO.	DESCRIPTION		NOTE
23	421-6642-91	ADJUST INSTR SH COLOR DISPLAY		
24	421-7669	ADJUST INSTR SH G-LOC DX.		
25	421-7670-06	STICKER APPLICATION UTILITY		
26	421-6241	STICKER DANGER ENG		
27	422-7010-01	STICKER CAUTION ENG		
28	220-5254	KEY MASTER FOR 220-5253		
29	SGB-1035X	KEY BAG		
30	422-0338-01	PLAY INSTR SH G-LOC DX ENG		
31	421-7677-01	STICKER SELECT THE COURSE ENG		
32				
33	429-0042	DISDLAY BOARD G-LOC		
34	GLC-0016	BOOT HOLDER		
35	421-7681-01	STICKER CONTINUE ENG		
201	000-0525-S	M SCR PH W/S	M5×25	
202	029-0079	TMP PRF SCR TH	M6×35	
203	030-0830	HEX BLT	M8×30	
204	030-0850	HEX BLT	M8×50	
205	032-0520	WNG BLT	M5×20	
206	039-0039	HEX BLT BLK	M10×80	
207	039-0098	HEX BLT BLK W/S	M8×35	
208	047-0001	RVT OPEN TYPE	3.2×4.4	
209	050-0010	HEX NUT	M10	
210	059-0054	HEX NUT P=1.5 #1	M22	
211	060-0008	FLT WSHR	M8	
212	060-0010	FLT WSHR	M10	
213	061-0008	SPR WSHR	M8	

① TOP ASSY G-L.O.C. DX. (GLC-0000)

(D-4/4)

ITEM NO.	PART NO.	DESCRIPTION		NOTE
214	061-0010	SPR WSHR	M10	
215	069-0001	FLT WSHR	5.5-20×1.6	
216	069-0035	FLT WSHR BLK	M6	
217	069-0048	FLT WSHR BLK	8.5×22×1.6	
218	069-0059	SPR WSHR	M22	
219	069-0061	FLT WSHR BLK	M10	
220	069-0063	SPR WSHR BLK	M10	
221	029-0272	M SCR FH BLK	M4×16	

② ASSY PILLAR (GLC-0001)

(D-1/2)

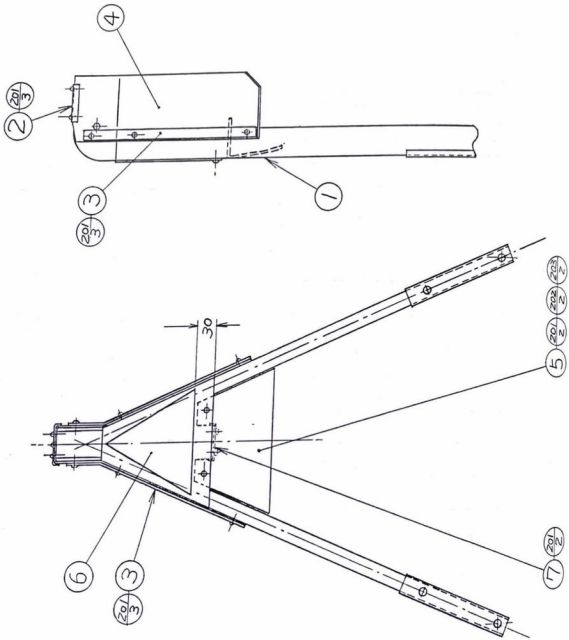

② ASSY PILLAR (GLC-0001)

ITEM NO.	PART NO.	DESCRIPTION	NOTE
1	GLC-0003	PILLAR	
2	GLC-0004	HOLDER A	
3	GLC-0005	HOLDER B	
4	GLC-0006	GUARD SHEET A	
5	GLC-0007	GUARD SHEET B	
6	421-7676	STICKER RANGER LARGE	
7	GLC-0015	HOLDER C	
201	008-0510	TMP PRF SCR TH M5×10	
202	051-0005	FLG NUT M5	
203	069-0001	FLT WSHR 5.5-20×1.6	

③ ASSY SHIELD CASE (GLC-0002) (D-1/2)

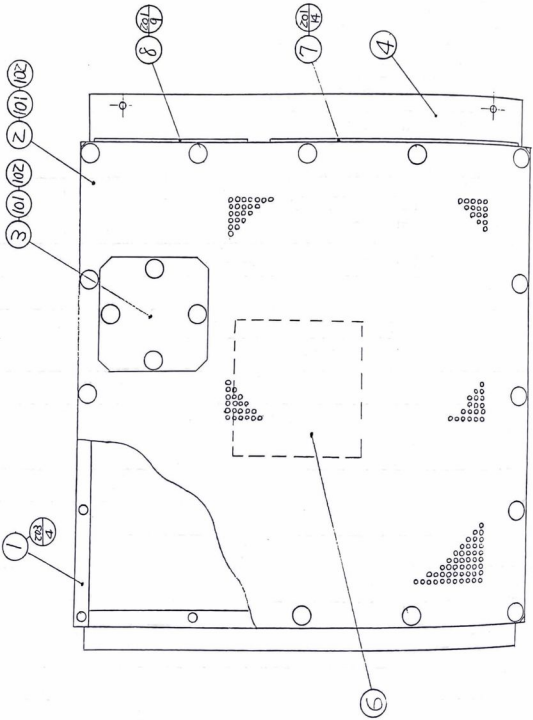

③ ASSY SHIELD CASE (GLC-0002)

(D-2/2)

ITEM NO.	PART NO.	DESCRIPTION	NOTE
1	POW-0005	SHIELD CASE	
2	POW-0006	SHIELD CASE LID	
3	POW-0007	DIP SWITCH LID	
4	GLC-0017	BASE SHIELD CASE	
6	POW-0015	PAD	
7	839-0335	FILTER BD A G-L. O. C	
8	839-0336	FILTER BD B G-L. O. C	
101	280-5079	NYLATCH GROMMET	
102	280-5080	NYLATCH PLUNGER	
201	010-0308-F	S-TITE SCR PH M3×8	
203	000-0412-FS	M SCR PH W/FS M4×12	

④ ASSY COIN CHUTE TOWER (GLC-0500)

(D-1/3)

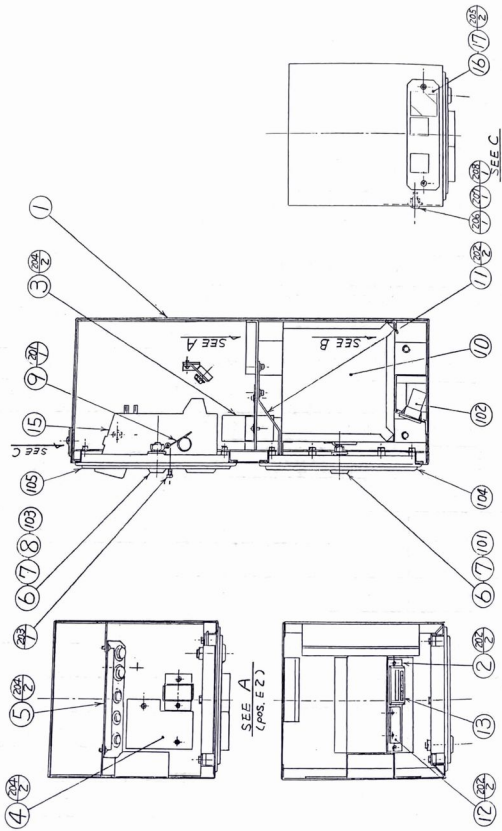

④ ASSY COIN CHUTE TOWER (GLC-0500) (D-2/3)

ITEM NO.	PART NO.	DESCRIPTION	NOTE
1	GLC-0501	COIN CHUTE TOWER	
2	GLC-0502	COIN METER PLATE	
3	GLC-0503	COIN CHUTE LOWER	
4			
5	GLC-0505	SW UNIT	
6	DP-1167	TNG LKG	
7	HN-1050	SPACER RING	
8			
9	109-0045	KEY HOLDER	
10	KR-1607X	CASH BOX	
11	KR-1608	LOCK BRACKET	
12			
13	421-6591-01	STICKER COIN METER	
14			
15	421-7501-02	STICKER 6.3V 0.15A	
16	KR-1403	DENOMINATION PLATE	
17	MX-1103	DENOMINATION SHEET	
	MX-1103	DENOMINATION SHEET	
101	220-5046-91	MAGNETIC LOCK W/KEY	
102	220-5064	MAG CNTR 6 DIG DC5V	
103	220-5253	MAGNETIC LOCK MASTER W/O KEY	
104	220-5220	CASH BOX DOOR	
105	220-5282	ASSY COIN CHUTE DOOR	
106	601-0460	TIE BELT 85mm	
107	280-0425	CORD CLAMP ϕ10	

④ ASSY COIN CHUTE TOWER (GLC-0500)

(D-3/3)

ITEM NO.	PART NO.	DESCRIPTION	NOTE
108	280-5008	CORD CLAMP φ15	
109	280-5009	CORD CLAMP φ21	
201	000-0306-F	M SCR PH W/F M3×6	
202	000-0410-FS	M SCR PH W/FS M4×10	
204	010-0408-F	S-TITE SCR PH W/F M4×8	
205	008-0410	TMP PRF SCR TH M4×10	
206	039-0095	CRG BLT BLK M6×15	
207	051-0006	FLG NUT M6	
208	060-0010	FLT WSHR M10	

⑤ SW UNIT (GLC-0505)

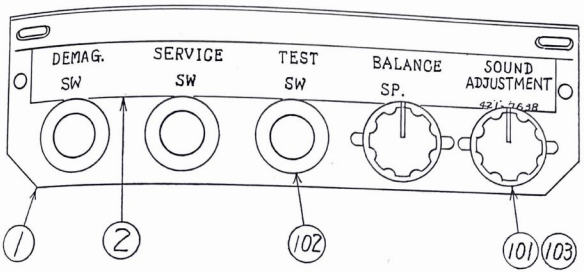

ITEM NO.	PART NO.	DESCRIPTION	NOTE
1	KR-1405	SW BRACKET	
2	421-7638	STICKER SW UNIT	
101	220-5179	VOL CONT B-5K OHM	
102	509-5028	SW PB 1 M	
103	601-0042	KNOB 22㎜	

⑥ ASSY MONOCOQUE (GLC-1000)

(D-1/6)

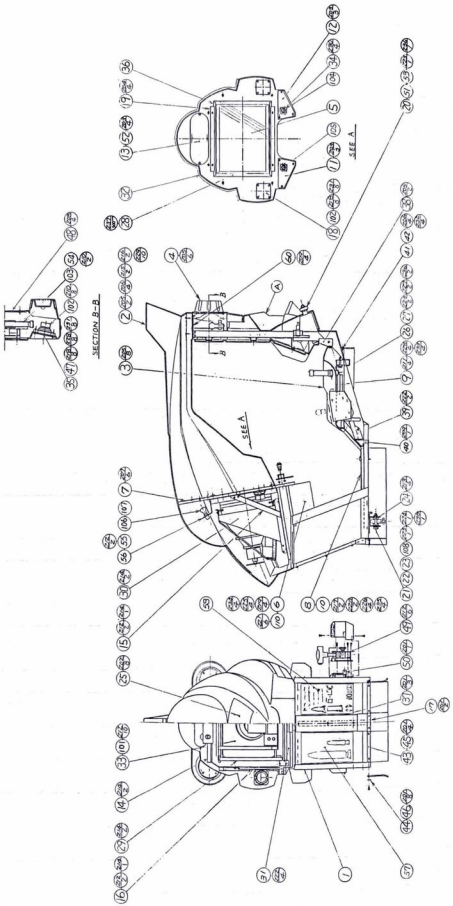

⑥ ASSY MONOCOQUE (GLC-1000)

(D-2/6)

ITEM NO.	PART NO.	DESCRIPTION	NOTE
1	GLC-1001	SHASSIS	
2	GLC-1002	HOOD	
3	GLC-1003	SEAT	
4	GLC-1004	ASSY SEAT	
5	GLC-1008	FRONT GLASS	
6	GLC-1009	ASSY MONITOR BASE	
7	GLC-1010	FRONT PANEL	
8	GLC-1011	FLOOR BASE	
9	GLC-1012	SEAT BASE	
10	GLC-1013	FLOOR MAT	
11	GLC-1014-01	DESIGN PLATE L ENG	
12	GLC-1015	DESIGN PLATE R	
13	GLC-1016	LAMP COVER	
14	GLC-1017	PANEL SUPPORT	
15	GLC-1018	SUPPORT BRACKET L	
16	GLC-1019	SUPPORT BRACKET R	
17	GLC-1020	PROTECTOR CENTER	
18	GLC-1021	SP COVER	
19	GLC-1022	GLASS HOLDER	
20	GLC-1023	GUIDE ROLLER	
21	GLC-1024	SPACER A	
22	GLC-1025	SPACER B	
23	GLC-1026	SHOULDER SCREW	
24	GLC-1027	STUD	
25	GLC-1028	SERVICE DOOR	
26	RH-1104	SEAT BELT	

⑥ ASSY MONOCOQUE (GLC-1000)

(D-3/6)

ITEM NO.	PART NO.	DESCRIPTION	NOTE
27	TX-1050	SHOULDER SCREW	
28	TB-3003	TV MASK 20	
29	SLC-1074	BRACKET MONITOR 20" R	
30	SLC-1075	BRACKET MONITOR 20" L	
31	JI-1025	SUPPORT BRACKET	
32	GLC-1029	PACKING	
33	TY-1019X	BRACKET TV	
34	117-5164	START PLATE 37×42	
35	KR-1013	GUARD PLATE φ137	
36	GLC-1030	EDGE	
37	GLC-1031	WIRE COVER A	
38	GLC-1032	WIRE COVER B	
39	GLC-1033	WIRE COVER C	
40	GLC-1034	WIRE COVER D	
41	GLC-1035	SKIRT REAR	
42	GLC-1036	PROTECTOR REAR	
43	GLC-1037	PROTECTOR FRONT	
44	GLC-1038	PROTECTOR SIDE	
45	GLC-1039	SKIRT FRONT	
46	GLC-1040	SKIRT SIDE	
47	GLC-1041	BAFFLE BOARD	
48	GLC-1042	BILLBOARD PLATE DX	
49	GLC-2100	ASSY THROTTLE	
50	GLC-1043	BRACKET COVER	
51	GLC-1044	SPACER RING	
52	GLC-1045	SPECIAL WASHER 4.2-10×1	

⑥ ASSY MONOCOQUE (GLC-1000)

ITEM NO.	PART NO.	DESCRIPTION	NOTE
53	GLC-1046	SPECIAL WASHER 10.2-40×2	
54	421-7501-15	STICKER FL 10W	
55	421-7501-03	STICKER 110V 10W	
56	GLC-1540	LAMP BRACKET C	
57	421-7673	STICKER MISSILES	
58	421-7674	STICKER AMMUNITION	
60	GLC-1048	HOOD BRACKET	
101	200-5090	ASSY CLR DSPL 20 TYPE 100V	
	200-5095	ASSY CLR DSPL 20 TYPE 100V	
102	130-5051	SPEAKER 16Ω 10W φ90	
103	390-5276-10-02	ASSY FL UNIT 10W SD	
104	509-5218	PUSH BUTTON SWITCH IT YELLOW W/L AMD	
105	509-5329	PUSH BUTTON SW 1T RED	
106	390-5157	LAMP 110V 10W	
107	214-0111	LAMP SOCKET W/WIRE	
108	111-0019	ROD END φ22	
110	280-5008	CORD CLAMP φ15	
111	601-6476	FREE BUSH 6.2t	
201	008-0410	TMP PRF SCR TH M4×10	
202	008-0412	TMP PRF SCR TH M4×12	
203	008-0420	TMP PRF SCR TH M4×20	
204	008-0430	TMP PRF SCR TH M4×30	
205	008-0510	TMP PRF SCR TH M5×10	

⑥ ASSY MONOCOQUE (GLC-1000)

ITEM NO.	PART NO.	DESCRIPTION	NOTE
206	008-0520	TMP PRF SCR TH M5×20	
207	008-0525	TMP PRF SCR TH M5×25	
208	029-0119	TMP PRF SCR TH CHROME M4×12	
209	000-0410-FS	M SCR PH W/FS M4×10	
210	000-0416-FS	M SCR PH W/FS M4×16	
211	000-0425	M SCR PH M4×25	
212	000-0510-FS	M SCR PH W/FS M5×10	
213	000-0516-FS	M SCR PH W/FS M5×16	
214	000-0525-FS	M SCR PH W/FS M5×25	
215	029-0314	M SCR TH BLK M5×50	
216	029-0315	M SCR TH BLK M5×60	
217	029-0313	BTN HD SCR HEX SKT BLK M8×30	
218	031-0430-B	CRG BLT BLK M4×30	
219	030-0625	HEX BLT M6×25	
220	039-0037	HEX BLT BLK M8×30	
221	005-3113-F	W SCR RH W/F 3.1×13	
222	010-0408-F	S-TITE SCR PH W/F M4×8	
223	050-0010	HEX NUT M10	
224	059-0054	HEX NUT P=1.5 #1 M22	
225	060-0006	FLT WSHR M6	
226	060-0008	FLT WSHR M8	
227	060-0010	FLT WSHR M10	
228	069-0007	FLT WSHR 4.4-16×1.6	
229	069-0064	FLT WSHR BLK 5.5-20×1.6	
230	051-0003	FLG NUT M3	
231	051-0004	FLG NUT M4	

⑥ ASSY MONOCOQUE (GLC-1000)

ITEM NO.	PART NO.	DESCRIPTION		NOTE
232	051-0005	FLG NUT	M5	
233	061-0004	SPR WSHR	M4	
234	061-0006	SPR WSHR	M6	
235	061-0008	SPR WSHR	M8	
236	061-0010	SPR WSHR	M10	

⑦ ASSY SEAT (GLC−1004)

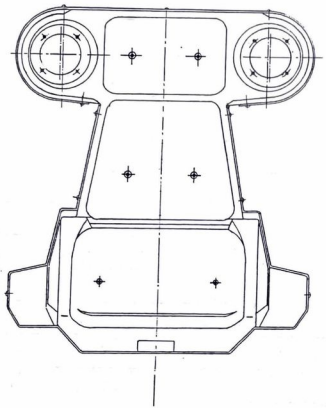

ITEM NO.	PART NO.	DESCRIPTION	NOTE
1	GLC−1005	SEAT FRONT	
2	GLC−1006	SEAT REAR	
3	GLC−1007	JET	
201	008−0412	TMP PRF SCR TH M4×12	
202	029−0119	TMP PRF SCR TH CHROME M4×12	

⑧ ASSY MONITOR BASE (GLC-1009)

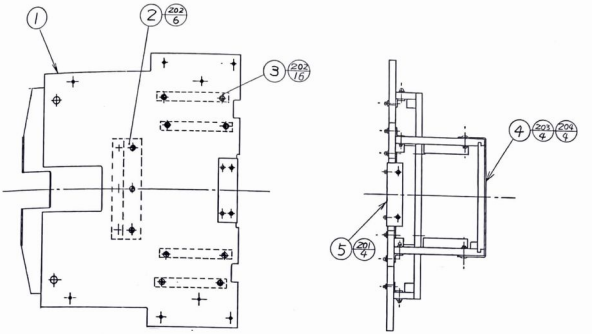

ITEM NO.	PART NO.	DESCRIPTION	NOTE
1	GLC-1009-A	MONITOR BASE	
2	GLC-1009-B	SUPPORT BRACKET A	
3	GLC-1009-C	SUPPORT BRACKET B	
4	GLC-1009-D	PROTECTOR	
5	TX-1040	BRACKET	
201	000-0420-S	M SCR PH W/S M4×20	
202	000-0525-FS	M SCR PH W/FS M5×25	
203	031-0525-B	CRG BLT BLK M5×25	
204	051-0005	FLG NUT M5	

⑨ ASSY CONTROLLER (GLC-2000)

(D-1/4)

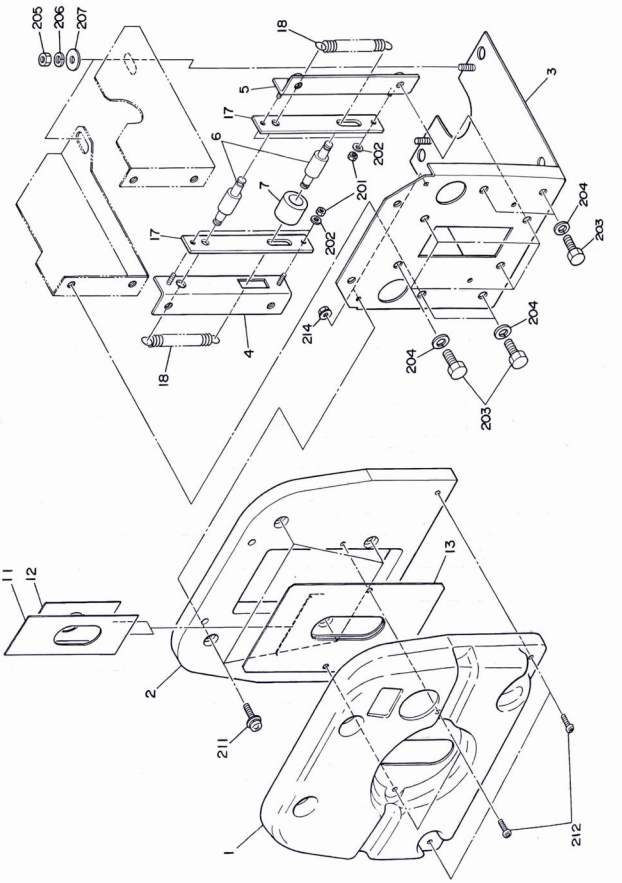

⑨ ASSY CONTROLLER (GLC-2000)

(D-2/4)

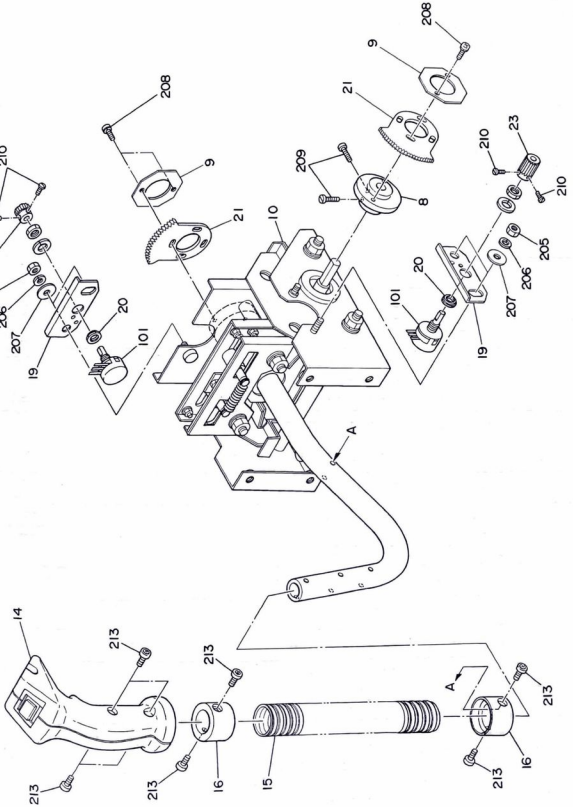

⑨ ASSY CONTROLLER (GLC-2000)

ITEM NO.	PART NO.	DESCRIPTION	NOTE
1	GLC-2001	CONTROL PANEL	
2	GLC-2002	CONTROL PANEL BASE	
3	GLC-2003	MAIN BASE	
4	GLC-2009	LEFT PROTECTOR	
5	GLC-2010	RIGHT PROTECTOR	
6	GLC-2011	CENTERING SHAFT	
7	GLC-2012	CENTERING PIPE	
8	GLC-2013	GUIDE RING 46	
9	GLC-2014	SET PLATE	
10	GLC-2015	SUB ASSY CONTROLLER	
11	GLC-2021	SLIDE PLATE A	
12	GLC-2022	SLIDE PLATE B	
13	GLC-2023	PLATE HOLDER	
14	GLC-2030	ASSY HANDLE GRIP	
15	TX-1309	PROTECT TUBE	
16	TX-1310	HOLDER A	
17	TX-1327	SIDE PLATE	
18	TX-1330	EXT. SPRING	
19	GUN-2621	VOLUME BRACKET	
20	GUN-2623	VOLUME RING	
21	601-6450	GEAR 110	
22	601-6451	GEAR 20, L=14	
23	601-5410	GEAR 15, ϕ6	
101	220-5130	VOL CONT B-5K OHM	
102	280-0425	CORD CLAMP ϕ10	

⑨ ASSY CONTROLLER (GLC-2000)

ITEM NO.	PART NO.	DESCRIPTION	NOTE
103	280-5008	CORD CLAMP ϕ15	
201	054-0004	U NUT M4	
202	060-0004	FLT WSHR M4	
203	030-0820	HEX BLT M8×20	
204	061-0008	SPR WSHR M8	
205	050-0006	HEX NUT M6	
206	061-0006	SPR WSHR M6	
207	069-0002	FLT WSHR 6.5-19×1.2	
208	000-0412-S	M SCR PH W/S M4×12	
209	028-0021	SET SCR PH SPECIAL M4×16	
210	028-0003	SET SCR PH SPECIAL M3×8	
211	000-0520-FS	M SCR PH W/FS M5×20	
212	008-0416	TMP PRF SCR TH M4×16	
213	029-0310	TMP PRF SCR PH CRM M5×10	
214	051-0005	FLG NUT M5	
215	090-0012	SCREW LOCK	
216	090-0013	GREASE	

⑩ SUB ASSY CONTROLLER (GLC-2015)

(D-1/2)

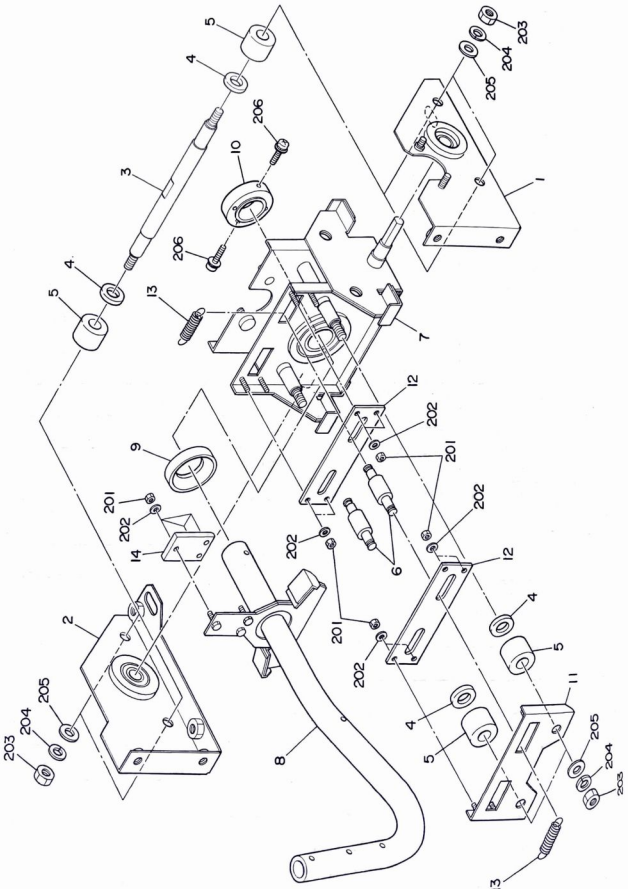

⑩ SUB ASSY CONTROLLER (GLC-2015) (D-2/2)

ITEM NO.	PART NO.	DESCRIPTION	NOTE
1	GLC-2004	LEFT CASING	
2	GLC-2005	RIGHT CASING	
3	GLC-2006	STOPPER SHAFT	
4	GLC-2007	STOPPER RING	
5	GLC-2008	BUMPER	
6	GLC-2011	CENTERING SHAFT	
7	GLC-2016	MECHANISM CASING	
8	GLC-2017	HANDLE SHAFT	
9	GLC-2018	FRONT SPACER	
10	GLC-2019	REAR SPACER	
11	GLC-2020	FRONT PROTECTOR	
12	TX-1315	PLATE	
13	TX-1317	EXT. SPRING	
14	TX-1319	CENTER PLATE	
201	054-0004	U NUT M4	
202	060-0004	FLT WSHR M4	
203	050-0008	HEX NUT M8	
204	061-0008	SPR WSHR M8	
205	060-0008	FLT WSHR M8	
206	000-0520-FS	M SCR PH W/FS M5×20	

⑪ ASSY HANDLE GRIP (GLC-2030)

(D-1/2)

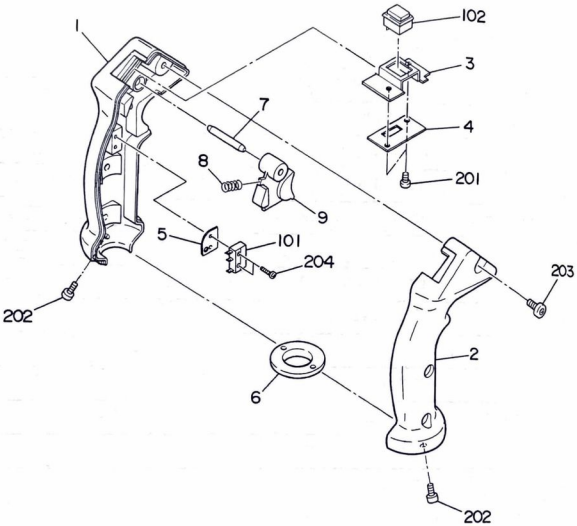

⑪ ASSY HANDLE GRIP (GLC-2030)

ITEM NO.	PART NO.	DESCRIPTION	NOTE
1	GLC-2031	HANDLE GRIP RIGHT	
2	GLC-2032	HANDLE GRIP LEFT	
3	GLC-2033	SW BRACKET	
4	GLC-2034	PLATE	
5	GLC-2035	WIRE PLATE	
6	GLC-2036	STOPPER	
7	123-5062	SHAFT TRIGGER	
8	125-0011	COMPRESSION SPRING	
9	253-5331	TRIGGER	
101	509-0058	SWITCH MICRO TYPE	
102	509-5319	SW PUSH BUTTON IT YELLOW	
103	310-5029-F10	SUMITUBE F F 10㎜	
104	601-0460	TIE BELT 85㎜	
201	000-0306-S	M SCR PH W/S M3×6	
202	029-0309	M SCR PH CRM M4×10	
203	029-0310	TMP PRF SCR PH CRM M5×10	
204	029-0312	M SCR PH M2×12	
205	090-0042	GLUE SCREW LOCK	
	090-0012	SCREW LOCK	

⑫ ASSY THROTTLE (GLC-2100) (D-1/2)

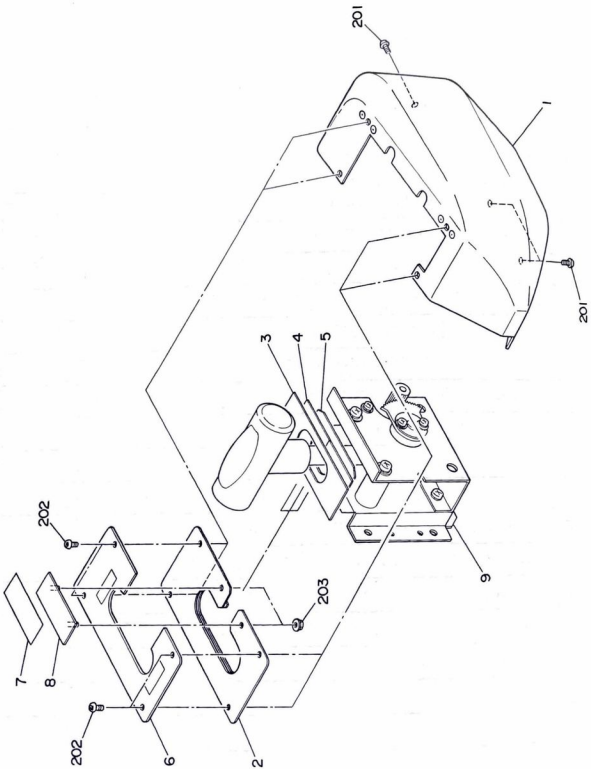

⑫ ASSY THROTTLE (GLC-2100)

(D-2/2)

ITEM NO.	PART NO.	DESCRIPTION	NOTE
1	GLC-2109	COVER THROTTLE	
2	GLC-2110	GUIDE COVER	
3	GLC-2111	COVER A	
4	GLC-2112	COVER B	
5	GLC-2113	COVER C	
6	GLC-2114	DESIGN PLATE A	
7	GLC-2115	DESIGN PLATE B	
8	GLC-2116	PLATE COVER	
9	GLC-2150	ASSY THROTTLE MECHA	
201	008-0410	TMP PRF SCR TH M4×10	
202	008-0416	TMP PRF SCR TH M4×16	
203	051-0004	FLG NUT M4	

⑬ ASSY THROTTLE MECHA (GLC-2150) (D-1/3)

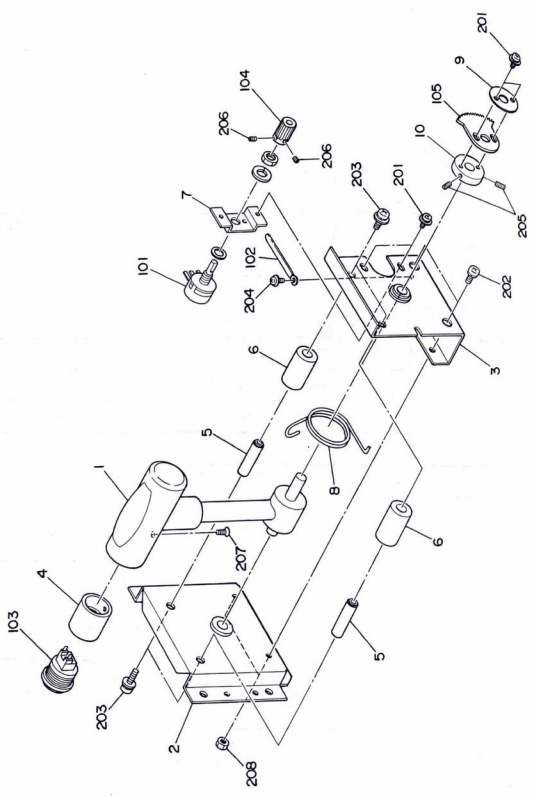

⑬ ASSY THROTTLE MECHA (GLC-2150) (D-2/3)

ITEM NO.	PART NO.	DESCRIPTION	NOTE
1	GLC-2101X	THROTTLE LEVER	
2	GLC-2102	BASE BRKT A	
3	GLC-2103	BASE BRKT B	
4	GLC-2104	SW COLLAR	
5	GLC-2105	STOPPER POST	
6	GLC-2106	RUBBER STOPPER	
7	GLC-2107	VR BRRT	
8	GLC-2108	TORTION SPRING	
9	GLC-2122	GEAR PLATE	
10	JI-3113	GUIDE RING	
101	220-5130	VOL CONT B-5KOHM	
102	280-0419	HARNESS LUG	
103	509-5323-01	SW PB IM RED W/O RING	
104	601-5410	GEAR 15 ϕ6	
105	601-6005	ADJUST GEAR	
201	000-0412-FS	M SCR PH W/FS M4×12	
202	000-0514-S	M SCR PH W/S M5×14	
203	000-0514-FS	M SCR PH W/FS M5×14	
204	010-0308-F	S-TITE SCR PH W/F M3×8	
205	028-0021	SET SCR PH SPCL M4×16	
206	028-0040	SET SCR HEX SKT CUP M3×6	
207	029-0226	M SCR FH BLK M4×8	
208	054-0005	U-NUT M5	
209	090-0002	GLUE, CEMEDINE NO.3000RS	

⑬ ASSY THROTTLE MECHA (GLC-2150) (D-3/3)

ITEM NO.	PART NO.	DESCRIPTION	NOTE
210	090-0012	SCREW LOCK	
211	090-0013	GREASE	

⑭ ASSY MECHANISM & BASE (GLC-3000) (D-1/5)

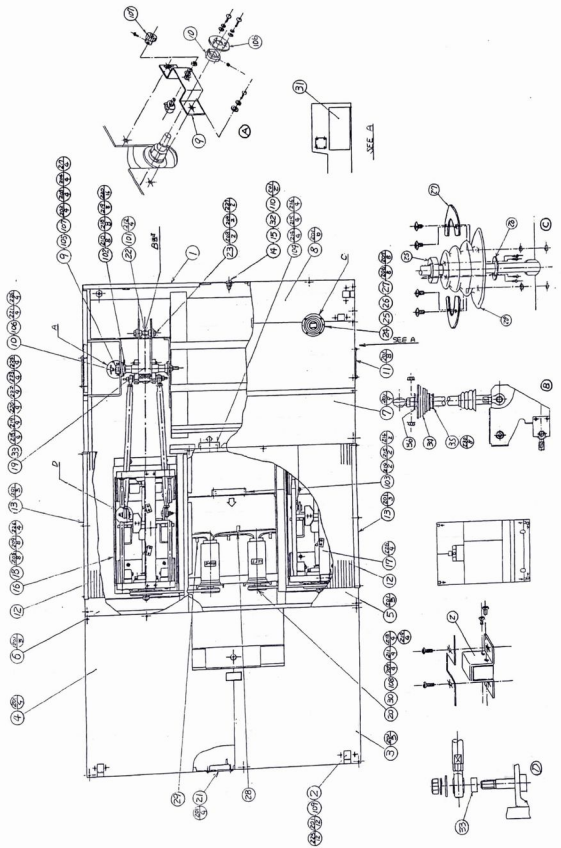

⑭ ASSY MECHANISM & BASE (GLC-3000) (D-2/5)

ITEM NO.	PART NO.	DESCRIPTION	NOTE
1	GLC-3001	BASE	
2	GLC-3002	SENSOR BRKT	
3	GLC-3003	COVER LEFT	
4	GLC-3004	COVER RIGHT	
5	GLC-3005	COVER CENTER LEFT	
6	GLC-3006	COVER CENTER RIGHT	
7	GLC-3007	REAR COVER A	
8	GLC-3008	REAR COVER B	
9	GLC-3009	BRKT VR	
10	GLC-3010	GUIDE RING	
11	GLC-3011	SIDE PCATE	
12	GLC-3012	FLOOR MAT	
13	GLC-3013	CORNER BRKT	
14	GLC-3014	SERVICE DOOR	
15	DP-1167	TNG LKG	
16	GLC-3050	ASSY MECHANISM	
17	GLC-3100	LIMIT SW ASSY LEFT	
18	GLC-3110	LIMIT SW ASSY RIGHT	
19	GLC-3130	ASSY CRANK	
20	YZ-3203	ASSY MOTOR	
21	GLC-3300	AC UNIT	
22	GLC-3015	PUSH ROD	
23	GLC-3016	ROD SCREW	
24	GLC-3017	ROD BOOT	
25	GLC-3018	ROD GUIDE	
26	GLC-3019	GUIDE PLATE	

⑭ ASSY MECHANISM & BASE (GLC-3000) (D-3/5)

ITEM NO.	PART NO.	DESCRIPTION	NOTE
27	GLC-3020	COUER PLATE	
28	421-7662	STICKER LEFT	
29	421-7661	STICKER RIGHT	
30	421-7663	STICKER R-L MOTOR	
31	421-7671	STICKER G-LOC	
32	421-7672	STICKER PUTTING A COIN	
33	GLC-3021	ROD END COLLAR	
34	GLC-3022	ROD BOOT UPPER	
35	GLC-3023	BOOT HOLDER UPPER	
36	GLC-3024	ROD GUIDE UPPER	
101	111-0018	ROD END ϕ18	
102	100-5031	BEARING UNIT	
103	260-0035	FAN MOTOR AC100	
104	260-0011-02	AXAL FAN AC100V 50～60Hz	
105	220-5130	VOL CONT B-5K OHM	
106	601-6109	GEAR 60	
107	601-6451	GEAR 20, L=14	
108	350-5198	V BELT	
109	370-5019	BEAM SENSOR	
110	220-5253	MAGNETIC LOCK MASTER W/O KEY	
111	280-5009	CORD CLAMP ϕ21	
112	280-5122	CORD CLAMP	
113	280-5169	CORD CLAMP TL-20S	
201	008-0410	TMP PRF SCR TH M4×10	

⑭ ASSY MECHANISM & BASE (GLC-3000) (D-4/5)

ITEM NO.	PART NO.	DESCRIPTION	NOTE
202	029-0035	M SCR PH M6×12	
203	060-0006	FLT WSHR M6	
204	061-0006	SPR WSHR M6	
206	008-0416	TMP PRF SCR TH M4×16	
207	012-0412	TAP SCR PH M4×12	
208	050-0010	HEX NUT M10	
209	065-0010	SPR WSHR M10	
210	039-0096	HEX BLT M14×40	
211	039-0022	HEX BLT M10×60	
212	059-0020	HEX NUT M18	
213	060-0010	FLT WSHR M10	
214	000-0450	M SCR PH M4×50	
215	060-0004	FLT WSHR M4	
216	061-0004	SPR WSHR M4	
217	028-0003	SET SCR PH SPCL M3×8	
218	059-0016	HEX NUT M14	
219	069-0045	FLT WSHR M14	
220	069-0019	SPR WSHR M14	
221	028-0019	SET SCR HEX SKT CP UNBR M4×8	
222	050-0008	HEX NUT M8	
223	060-0008	FLT WSHR M8	
224	061-0008	SPR WSHR M8	
225	008-0420	TMP PRF SCR TH M4×20	
226	000-0412-FS	M SCR PH W/FS M4×12	
227	069-0010	FLT WSHR 10.3-22.2×2	
228	090-0012	SCREW LOCK	

⑭ ASSY MECHANISM & BASE (GLC-3000) (D-5/5)

ITEM NO.	PART NO.	DESCRIPTION	NOTE
229	090-0013	GREASE	
230	051-0003	FLG NUT M3	

⑮ ASSY MECHANISM (GLC-3050)

(D-1/3)

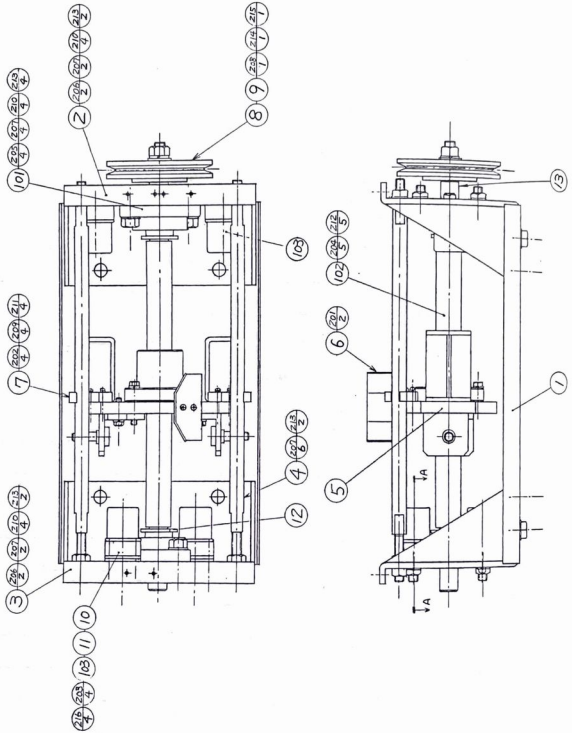

⑮ ASSY MECHANISM (GLC-3050)

ITEM NO.	PART NO.	DESCRIPTION	NOTE
1	YZ-3101	MECHA BASE	
2	YZ-3102	SIDE PLATE	
3	GLC-3051	SIDE PLATE G	
4	YZ-3103	ADJUST SHAFT	
5	GLC-3052	MOVING PLATE	
6	GLC-3053	ACTUATER	
7	YZ-3109	SHAFT GUIDE	
8	KR-3005X	DRIVEN PULLEY	
9	RH-3311	KEY	
10	GLC-3054	STOPPER SPACER	
11	GLC-3055	ADJUST RING	
12	RH-3313	BEARING SPACER	
13	YZ-3116	THRUST COLLAR	
101	100-5025	BEARING UNIT	
102	350-5081	BALL SCREW	
103	601-5472	RUBBER STOPPER	
201	000-0412-FS	M SCR PH W/FS M4×12	
202	000-0430	M SCR PH M4×30	
203	030-0520	HEX BLT M5×20	
204	030-0630	HEX BLT M6×30	
205	039-0013	HEX BLT M10×40	
206	039-0021	HEX BLT M10×25	
207	050-0010	HEX NUT M10	
208	059-0017	HEX NUT M12	

⑮ ASSY MECHANISM (GLC-3050)

(D-3/3)

ITEM NO.	PART NO.	DESCRIPTION	NOTE
209	060-0004	FLT WSHR M4	
210	060-0010	FLT WSHR M10	
211	061-0004	SPR WSHR M4	
212	061-0006	SPR WSHR M6	
213	061-0010	SPR WSHR M10	
214	061-0012	SPR WSHR M12	
215	069-0020	FLT WSHR M12	
216	061-0005	SPR WSHR M5	
217	090-0012	SCREW LOCK	
218	090-0013	GREASE	

⑯ LIMIT SW ASSY LEFT (GLC-3100)

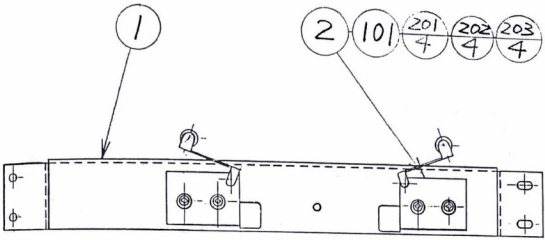

ITEM NO.	PART NO.	DESCRIPTION	NOTE
1	GLC-3101	LIMIT SW BRACKET	
2	KR-3023	LIMIT SW NUT PLATE	
101	509-5199	SW MICRO TYPE	
201	000-0430	M SCR PH M4×30	
202	060-0004	FLT WSHR M4	
203	061-0004	SPR WSHR M4	

⑰ LIMIT SW ASSY RIGHT (GLC-3110)

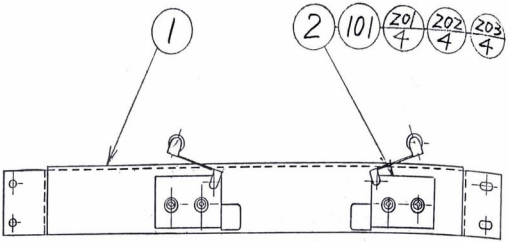

ITEM NO.	PART NO.	DESCRIPTION	NOTE
1	GLC-3101	LIMIT SW BRACKET	
2	KR-3023	LIMIT SW NUT PLATE	
101	509-5199	SW MICRO TYPE	
201	000-0430	M SCR PH M4×30	
202	060-0004	FLT WSHR M4	
203	061-0004	SPR WSHR M4	

⑱ ASSY CRANK (GLC-3130)

(D-1/2)

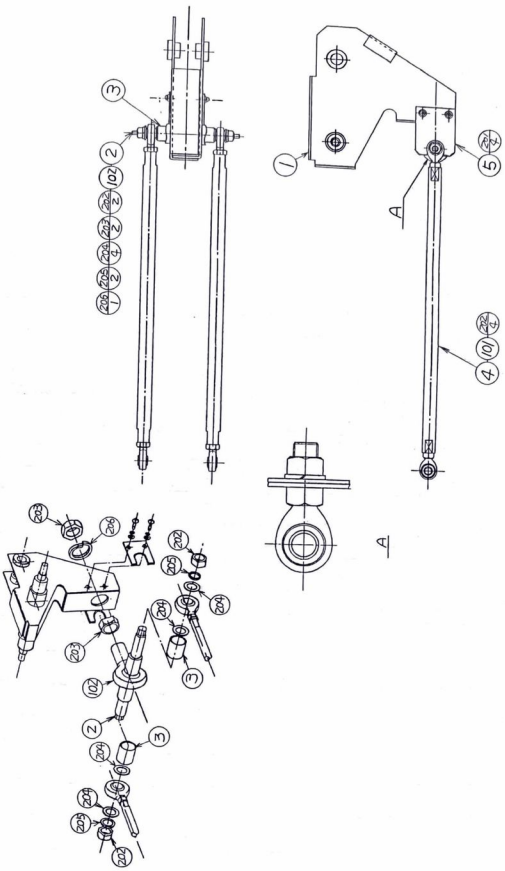
3
2
10
23
23
23
23
23
23
1
2
20
20
20

⑱ ASSY CRANK (GLC-3130)

ITEM NO.	PART NO.	DESCRIPTION		NOTE
1	GLC-3131	CRANK		
2	GLC-3132	JOINT SHAFT		
3	GLC-3133	J. SHAFT COLLAR		
4	GLC-3134	PARALLEL ROD		
5	GLC-3135	GUIDE J. SHAFT		
101	111-0010	ROD END ϕ10		
102	111-0018	ROD END ϕ18		
201	000-0512-FS	M SCR PH W/FS	M5×12	
202	050-0010	HEX NUT	M10	
203	059-0020	HEX NUT	M18 (P=1.5)	
204	060-0010	FLT WSHR	M10	
205	061-0010	SPR WSHR	M10	
206	069-0034	SPR WSHR	M18	
207	090-0012	SCREW LOCK		
208	090-0013	GREASE		

⑲ AC UNIT (GLC-3300)

(D-1/2)

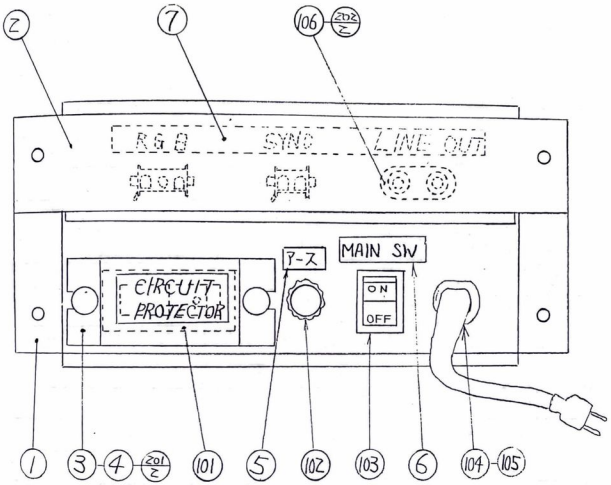

⑲ AC UNIT (GLC-3300)

ITEM NO.	PART NO.	DESCRIPTION	NOTE
1	GLC-3301	AC BRACKET	
2	GLC-3302	AC UNIT COVER	
3	GLC-3303	CP COVER	
4	421-7468	STICKER C.P	
5	421-6516	STICKER EARTH	
6	421-6950	STICKER MAIN SW	
7	421-7665	STICKER LINE OUT	
101	512-5016-01	CIRCUIT PROTECTOR NRLY 1100-7.5A (200~240V AREA)	
102	280-0417	TERM. BINPING POST BLACK	
103	509-5325	SW ROCKER TYPE 1M	
104	280-5134-6N14	BUSHING STRAIN RELIEF 6N14	
105	600-0110 600-5007	CABLE & PLUG ASSY W/-F- L=2.5M W/EARTH (USA ONLY) CABLE & PLUG ASSY W/EARTH (200~240V AREA)	
106	210-5037	2P PHONO JACK	
201	008-0408	TMP PRF SCR TH M4×8	
202	051-0003	FLG NUT M3	

⑳ ASSY PWR SPLY DX (GLC-4000)

(D-1/2)

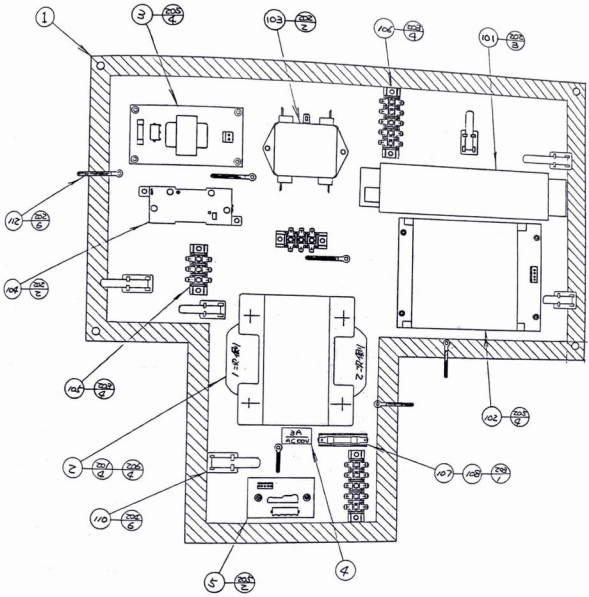

⑳ ASSY PWR SPLY DX (GLC-4000)

ITEM NO.	PART NO.	DESCRIPTION	NOTE
1	GLC-4001	WOODEN BASE A	
2	560-5167	PWR XFMR 90-240V 100V, 18.5V	
3	839-0339	RECT BD +5V～24V	
4	421-7628	STICKER FUSE INSTR 3A 100V	
5	839-0233-02	SSR AC 2A DC 5V BD	
101	400-5089	SW REGU AC 90-240V +5V 12A	
102	601-6227-02	PWR AMP W/SW REGU 12V 5A	
103	270-5032	NOISE FILTER 20A	
104	450-5048	SSR AC 20A	
105	117-5172	TERMINAL PLATE 3P	
106	117-5167	TERMINAL 5P-2P×2 SHORT	
107	514-5028	FUSE HOLDER 1P W/COVER	
108	514-5036-3000	FUSE 6.4φ×30 3A 125V	
110	280-5008	CORD CLAMP φ15	
112	280-0419	HARNESS LUG	
113	601-0460	PLASTIC TIEBELT 85㎜	
201	000-0516-FS	M SCR PH W/FS M5×16	
202	005-3113-F	W SCR RH W/F 3.1×13	
203	005-3516	W SCR RH 3.5×16	
204	006-3110	W SCR FH 3.1×10	
205	029-0173	W SCR RH 2.7×25	
206	069-0001	FLT WSHR 5.5-20×1.6	

(21) ASSY MOTOR DRIVER (GLC-4100) (D-1/2)

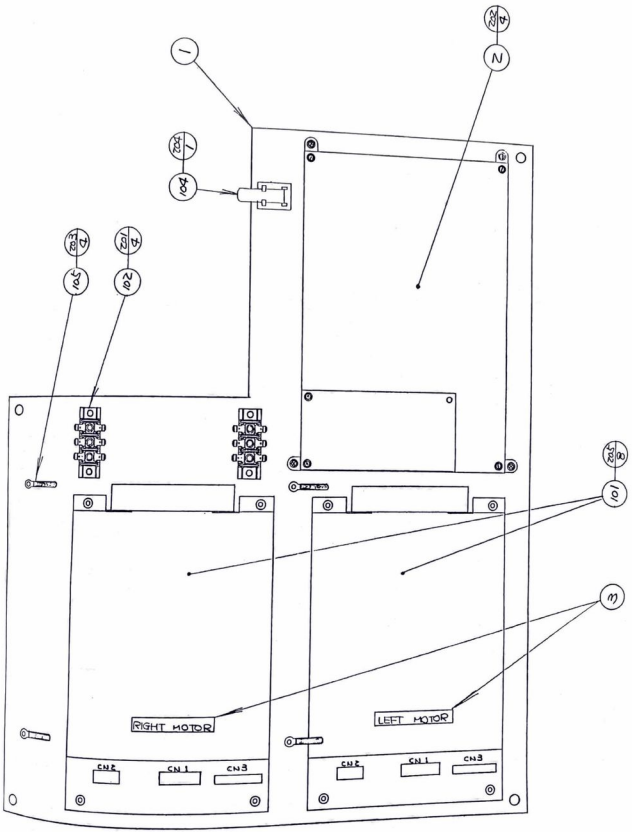

㉑ ASSY MOTOR DRIVER (GLC-4100)

ITEM NO.	PART NO.	DESCRIPTION	NOTE
1	GLC-4002	WOODEN BASE B	
2	839-0340	DRIVE BD G-L.O.C	
	839-0340-01	DRIVE BD G-L.O.C.	
3	421-7663	STICKER R-L MOTOR	
101	400-5117	DC MOTOR DRIVER	
102	117-5172	TERMINAL PLATE 3P	
104	280-5008	CORD CLAMP ϕ15	
105	280-0419	HARNESS LUG	
106	601-0460	PLASTIC TIE BELT 85㎜	
201	005-3516	W SCR RH 3.5×16	
202	006-3113	W SCR FH 3.1×13	
203	005-3113-F	W SCR RH W/F 3.1×13	
204	006-3110	W SCR FH 3.1×10	
205	029-0173	W SCR RH 2.7×25	

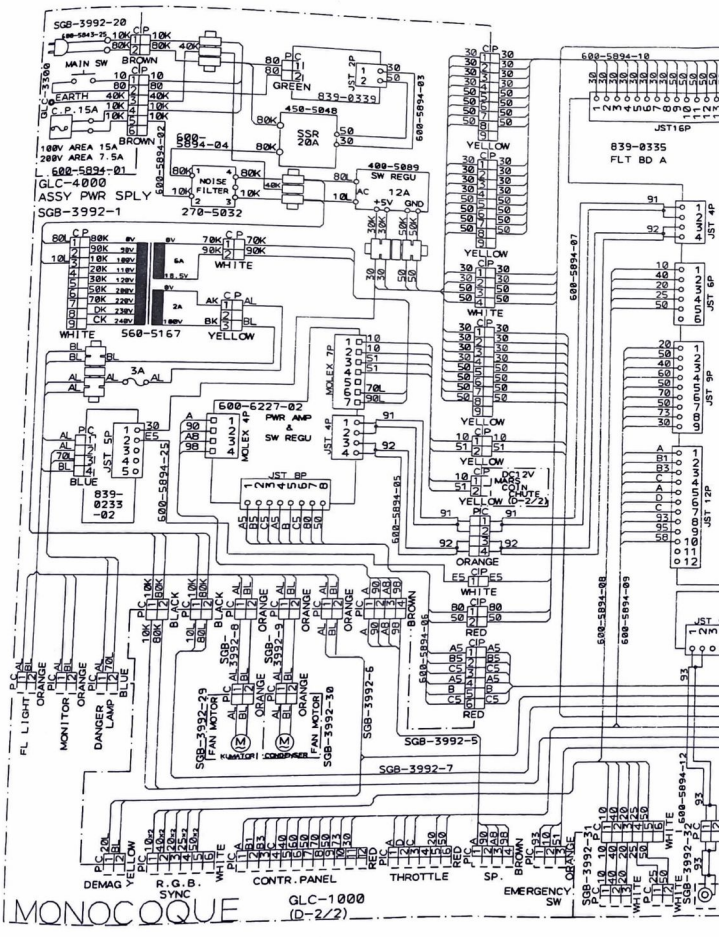
SGB-3992-20
MAIN SW
BROWN
EARTH
C.P. 15A
100V AREA 15A
200V AREA 7.5A
600-5894-01
GLC-4000
ASSY PWR SPLY
SGB-3992-1
GREEN
839-0339
450-5048
SSR
20A
600-5894-03
600-5894-04
NOISE FILTER
270-5032
400-5089
SW REGU
AC 12A
+5V GND
WHITE
560-5167
YELLOW
600-6227-02
PWR AMP & SW REGU
MOLEX 4P
JST 4P
JST 7P
JST 8P
JST SP
839-0233-02
600-5894-25
600-5894-95
600-5894-96
600-5894-07
600-5894-10
JST16P
839-0335
FLT BD A
JST 4P
JST 6P
JST 9P
JST 12P
MASC12V
CONN
CHUTE
YELLOW (D-2/2)
ORANGE
WHITE
RED
BROWN
SGB-3992-29
FAN MOTOR
SGB-3992-30
FAN MOTOR
SGB-3992-6
SGB-3992-5
SGB-3992-7
SGB-3992-31
SGB-3992-32
600-5894-12
FL LIGHT
MONITOR
DANGER LAMP
DEMAG
R.G.B. SYNC
CONTR. PANEL
THROTTLE
SP.
EMERGENCY SW
MONOCOQUE
GLC-1000
(D-2/2)

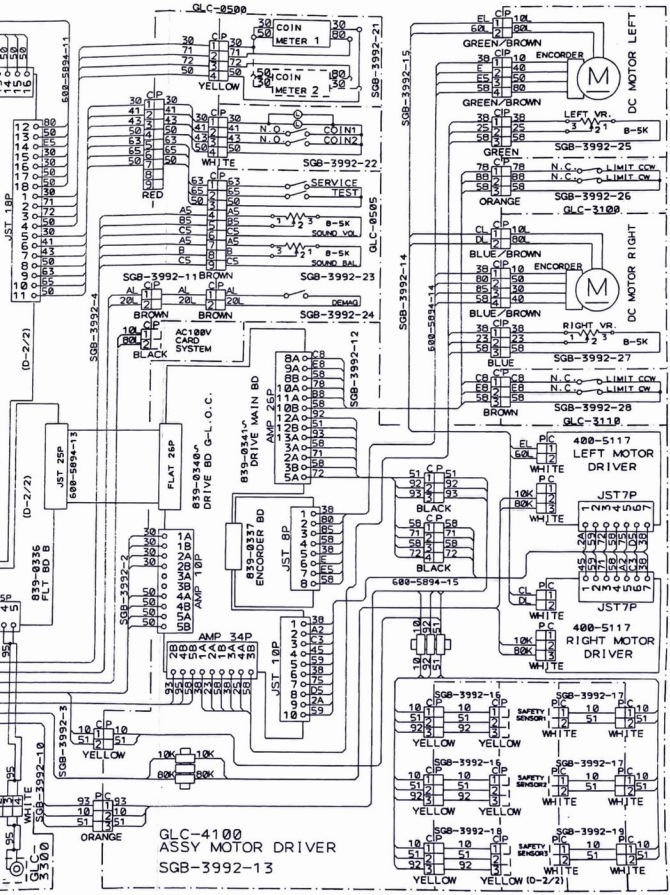

26. WIRING DIAGRAM (D-1/2)

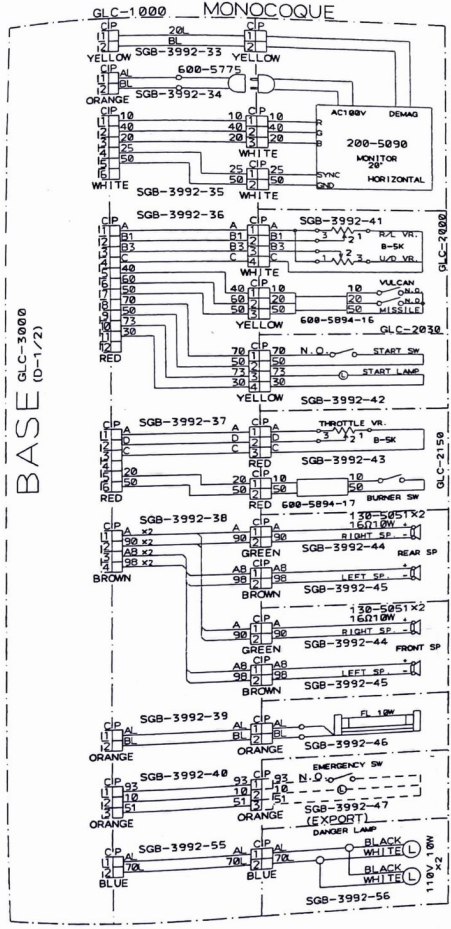
GLC-1000 MONOCOQUE
BASE GLC-3000 (D-1/2)
SGB-3992-33
SGB-3992-34
SGB-3992-35
SGB-3992-36
SGB-3992-37
SGB-3992-38
SGB-3992-39
SGB-3992-40
SGB-3992-55
600-5775
200-5030
MONITOR 20"
HORIZONTAL
WHITE
YELLOW
ORANGE
RED
BROWN
GREEN
BLUE
600-5894-16
GLC-2030
SGB-3992-41
SGB-3992-42
SGB-3992-43
600-5894-17
GLC-2150
SGB-3992-44
SGB-3992-45
SGB-3992-46
SGB-3992-47 (EXPORT)
SGB-3992-56
GLC-2000
R/L VR. B-5K
U/D VR.
VULCAN
MISSILE
START SW
START LAMP
THROTTLE VR. B-5K
BURNER SW
REAR SP
FRONT SP
LEFT SP.
RIGHT SP.
FL 12W
EMERGENCY SW
DANGER LAMP
BLACK WHITE
B39-0355 FLT BD A (D-1/2)
600-5894-18
600-5894-19
600-5894-20
600-5894-21
600-5894-22
BURNER SW
VULCAN SW
MISSILE SW
START SW
START LAMP
COIN METER1
COIN METER2
COIN SW1
COIN SW2
SERVICE SW
TEST SW
SOUND MUTE
DANGER LAMP
Vcc
R/L VR.
U/D VR.
THROTTLE VR
RIGHT MOTOR
LEFT MOTOR
91 SOUND LEFT
92 SOUND RIGHT
RED
GREEN
BLUE
SYNC

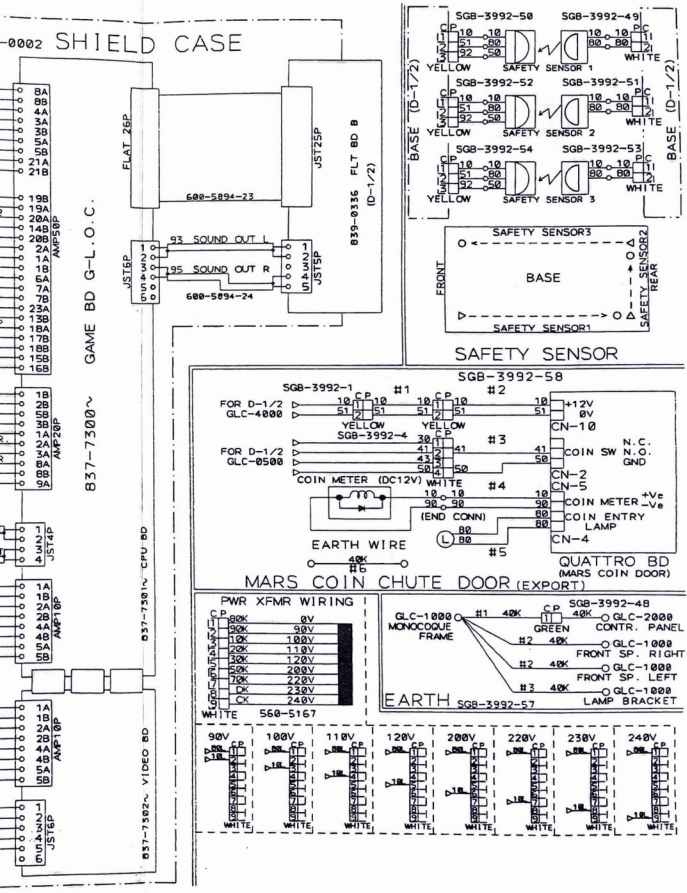

26. WIRING DIAGRAM (D-2/2)

DIP SW. SETTING

COIN/CREDIT OPTION SW. SETTING — DIP SW. A

		1	2	3	4	5	6	7	8
1 COIN	1 CREDIT	OFF	OFF	OFF	OFF	OFF	OFF	OFF	OFF
1 COIN	2 CREDITS	ON	OFF	OFF	OFF	ON	OFF	OFF	OFF
1 COIN	3 CREDITS	OFF	ON	OFF	OFF	OFF	ON	OFF	OFF
1 COIN	4 CREDITS	ON	ON	OFF	OFF	ON	ON	OFF	OFF
1 COIN	5 CREDITS	OFF	OFF	ON	OFF	OFF	OFF	ON	OFF
1 COIN	6 CREDITS	ON	OFF	ON	OFF	ON	OFF	ON	OFF
2 COINS	1 CREDIT	OFF	ON	ON	OFF	OFF	ON	ON	OFF
3 COINS	1 CREDIT	ON	ON	ON	OFF	ON	ON	ON	OFF
4 COINS	1 CREDIT	OFF	OFF	OFF	ON	OFF	OFF	OFF	ON
2 COINS	3 CREDITS	ON	OFF	OFF	ON	ON	OFF	OFF	ON
2 COINS	1 CREDIT								
4 COINS	2 CREDITS	OFF	ON	OFF	ON	OFF	ON	OFF	ON
5 COINS	3 CREDITS								
6 COINS	4 CREDITS								
2 COINS	1 CREDIT	ON	ON	OFF	ON	ON	ON	OFF	ON
4 COINS	3 CREDITS								
1 COIN	1 CREDIT								
2 COINS	2 CREDITS								
3 COINS	3 CREDITS	OFF	OFF	ON	ON	OFF	OFF	ON	ON
4 COINS	4 CREDITS								
5 COINS	6 CREDITS								
1 COIN	1 CREDIT								
2 COINS	2 CREDITS	ON	OFF	ON	ON	ON	OFF	ON	ON
3 COINS	3 CREDITS								
4 COINS	5 CREDITS								
1 COIN	1 CREDIT	OFF	ON	ON	ON	OFF	ON	ON	ON
2 COINS	3 CREDITS								
NOT USED		ON	ON	ON	ON	ON	ON	ON	ON
		COIN SW #1				COIN SW #2			

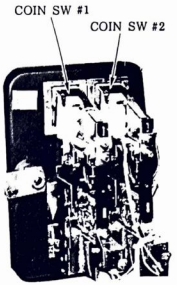

GAME OPTION SW. SETTING — DIP SW. B

		1	2	3	4	5	6	7	8
GAME DIFFICULTY	NORMAL	OFF	OFF						
	EASY	ON	OFF						
	HARD	OFF	ON						
	HARDEST	ON	ON						
ADVERTISE SOUND	OFF			OFF					
	ON			ON					
CABINET TYPE	MOVING				OFF	OFF			
	COCKPIT				ON	OFF			
	UPRIGHT								
	SIT DOWN				OFF	ON			
	NOT USED				ON	ON			
CONTINUE GAME	YES						OFF		
	NO						ON		
INITIAL CREDIT	CONTINUE CREDIT								
2	1							OFF	OFF
3	2							ON	OFF
1	1							OFF	ON
4	3							ON	ON

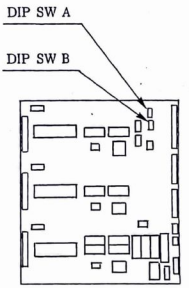

1 ST PRINTING

SEGA®

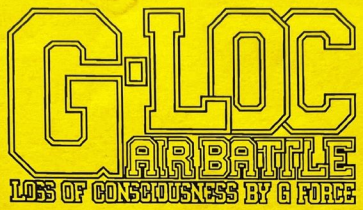

Owners Manual Supplement

SEGA ENTERPRISES,INC.

Manual No. 999-0021-02

Control Adjustment

CONTROLLER'S V.R. ADJUSTMENT

```
DIAGNOSTIC VER. 1.00
INPUT TEST

COIN #1  OFF      START    OFF
COIN #2  OFF      SERVICE  OFF

VULCAN OFF
MISSILE OFF
BURNER OFF

STICK RIGHT LEFT  80H  (1)
STICK UP DOWN     80H  (2)
SPEED             30H  (3)

PUSH TEST BUTTON
```

With the CONTROLLER in an "as is" free condition, display the screen in the SELF-TEST mode.

(1) CONTROLLER'S LEFT / RIGHT DIRECTIONS

(2) CONTROLLER'S UP / DOWN DIRECTIONS

(3) SPEED UP / DOWN

ADJUSTMENTS IN LEFT / RIGHT DIRECTIONS

1) Loosen the 6 SCREWS "A" which are shown by the arrow marks in Fig. 1, and detach the SIDE BRACKET from the CONTROLLER UNIT in a manner as shown in Fig. 2.

2) Loosen the two SCREWS "B" which secure the V.R. BRACKET and disengage the ADJUST GEAR and PINION GEAR. At this time, turn the V.R.shaft so that the variable value 1 becomes 80H, and make backlash adjustments.

3) In the case where fine adjustments are necessary, secure the V.R. BRACKET, loosen the ADJUST GEAR'S SCREW "C" and make adjustment in a manner so that the variable value 1 becomes 80H 4H.

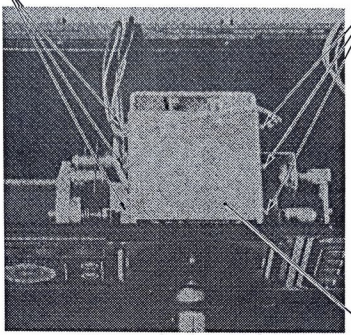
Screw "A"
000-0408-FS
M4 x 8
Screw "A"
000-0408-FS
M4 x 8
GLC-2212
Slide Bracket

Fig. 1

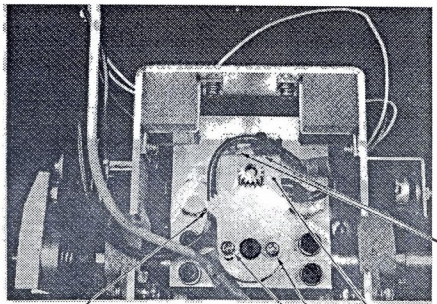
Screw "B"
000-0408-FS
M4 x 8
JI-3113
Adjust Gear
GLC-2210
Volume Bracket A
Screw "C"
000-0412-FS
M4 x 12

Fig. 2

ADJUSTMENT IN UP / DOWN DIRECTION

1) As shown in Fig. 3, loosen the 2 SCREWS "A" which fasten the V.R. BRACKET, and disengage the ADJUST GEAR and PINION GEAR. At this time, turn the V.R. shaft so that the variable value 2 becomes 80H, and make backlash adjustments.

2) In the case where fine adjustments are necessary, first secure the V.R. BRACKET, then loosen the ADJUST GEAR'S SCREW "B" and make adjustments in a manner so that the variable value 2 becomes 80H 4H.

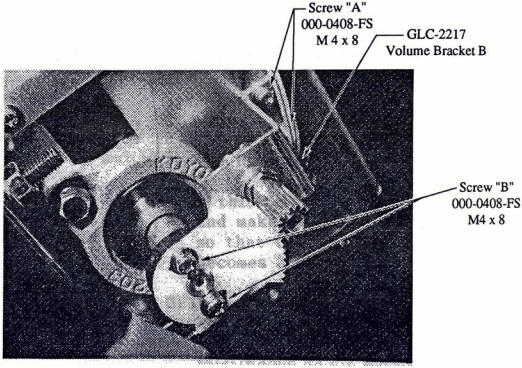

Fig. 3

THROTTLE ADJUSTMENT

With the THROTTLE LEVER in a "as is", free condition, display the screen in the SELF TEST mode.

At this time, if the variable value is 30H, it is OK.

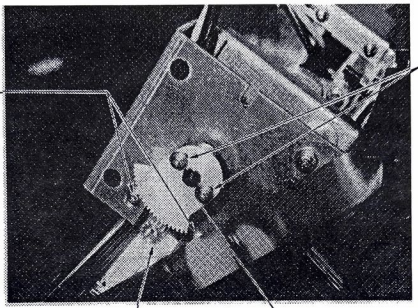

INPUT TEST

COIN #1	OFF	START	OFF
COIN #2	OFF	SERVICE	OFF
VULCAN	OFF		
MISSILE	OFF		
BURNER	OFF		
STICK RIGHT LEFT			80H (1)
STICK UP DOWN			80H (2)
SPEED			30H (3)

PUSH TEST BUTTON

ADJUSTMENT PROCEDURE

1) Loosen SCREW "A" that fasten the V.R. BRACKET resulting in the BRACKET moving and disengaging the PINION GEAR and ADJUST GEAR.

2) At this time, turn the V.R. shaft and make adjustments in a manner so that the variable value (3) becomes 30H.

3) In the case where fine adjustments are necessary, loosen the ADJUST GEAR'S SCREW "B" and make adjustment. (ALLOWABLE RANGE 2EH~30H)

REPLACING THE THROTTLE SWITCH

In the INPUT TEST mode, if the BURNER does not go ON even when the THROTTLE SWITCH is pushed, replace the THROTTLE SWITCH by using the following procedure:

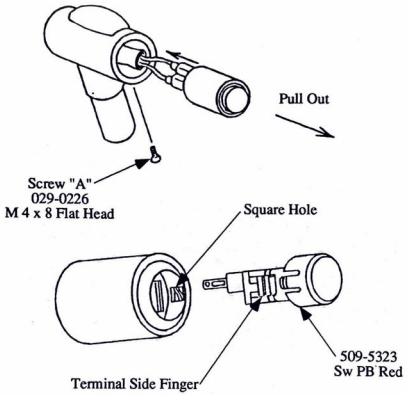

REPLACING PROCEDURE

1) Take off SCREW "A" which secures the SWITCH COLLAR.

2) Pull out the PUSH SWITCH together with the SWITCH COLLAR.

3) Pull out the PUSH SWITCH FASTON and while pushing in the terminal side's FINGER, remove the PUSH SWITCH.

4) Install the SPARE PARTS (509-5323-01) in the direction as shown.

5) Assemble it in the procedure opposite from the above.

NOTE: After replacing the switch, if the BURNER in the INPUT TEST does not go ON, then check for wiring, CONNECTORS, etc.

PCB ROM
&
DIP Switch

I.C. Board

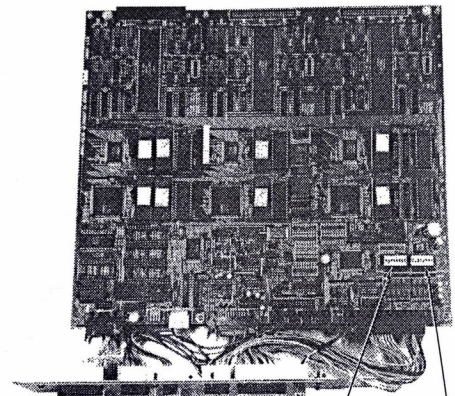

WARNING: TURN OFF POWER BEFORE PLUGGING IN OR REMOVING CONNECTORS.

ROM LOCATIONS

(1) 834 – 7300 –~ GAME BD G–L.O.C.

IC BOARD ORGANIZE

834–7300–06 < 837–7301–02 CPU BD
837 – 7302 VIDEO BD

834–7300–07 < 837–7301–02 CPU BD
837 – 7403 VIDEO BD

834–7300–08 < 837–7301–02 CPU BD
837 – 7402 VIDEO BD

837 – 7301 CPU BD G–L.O.C.

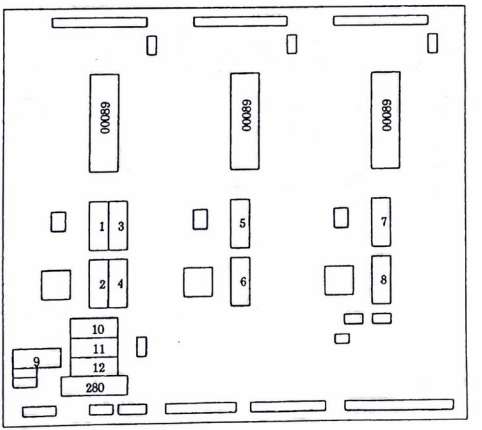

837 – 7302 VIDEO BD G–L.O.C.

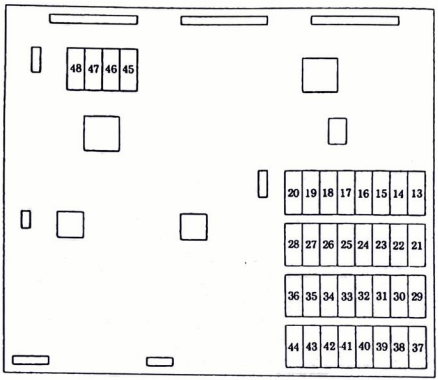

837 – 7402 VIDEO BD G–L.O.C.

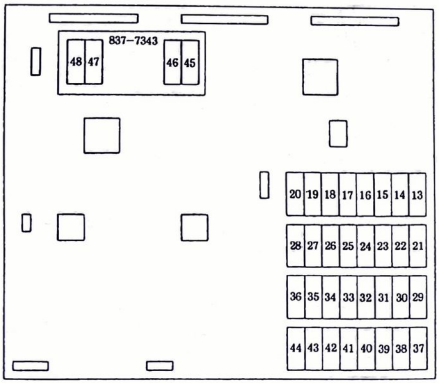

837 – 7403 VIDEO BD G–L.O.C.

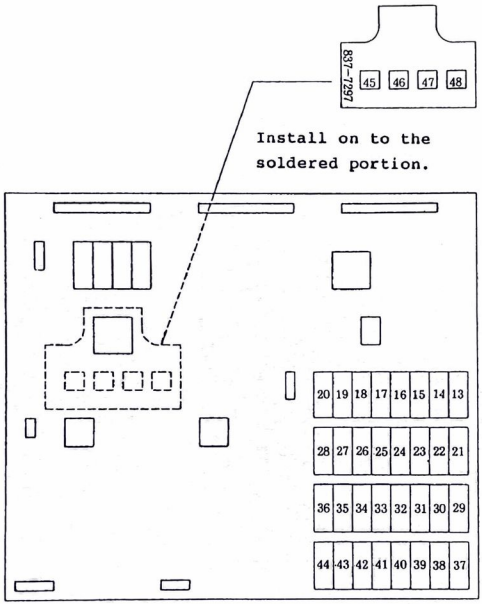

* This machine utilizes a game board comprised of the 837-7301 CPU BD and either one of the above-mentioned 3 video BDs.

834 – 7300 –~ GAME BD G–L.O.C.

837–7301			CPU BD		
IC LOCATION			ROM NUMBER	MAIN WORK	CAPACITY
1	IC	24	EPR – 13171	MAIN PROGRAM	1 M
2	IC	25	EPR – 13172		1 M
3	IC	26	EPR – 13027		1 M
4	IC	27	EPR – 13028		1 M
5	IC	53	EPR – 13029		1 M
6	IC	54	EPR – 13030		1 M
7	IC	80	EPR – 13031		1 M
8	IC	81	EPR – 13032		1 M
9	IC	102	EPR – 13033	SOUND PROG	512
10	IC	105	MPR – 13034	SOUND DATA	4 M
11	IC	106	MPR – 13035		4 M
12	IC	107	MPR – 13036		4 M

			VIDEO BD		CAPACITY	
13	IC	60	MPR – 13041	OBJECT	4 M	837–7403
14	IC	61	MPR – 13042		4 M	
15	IC	62	MPR – 13043		4 M	
16	IC	63	MPR – 13044		4 M	
17	IC	64	MPR – 13045		4 M	
18	IC	65	MPR – 13046		4 M	
19	IC	66	MPR – 13047		4 M	
20	IC	67	MPR – 13048		4 M	
21	IC	68	MPR – 13049		4 M	
22	IC	69	MPR – 13050		4 M	
23	IC	70	MPR – 13051		4 M	
24	IC	71	MPR – 13052		4 M	
25	IC	72	MPR – 13053		4 M	
26	IC	73	MPR – 13054		4 M	
27	IC	74	MPR – 13055		4 M	837–7402 COMMON
28	IC	75	MPR – 13056		4 M	
29	IC	79	MPR – 13057		4 M	
30	IC	80	MPR – 13058		4 M	
31	IC	81	MPR – 13059		4 M	
32	IC	82	MPR – 13060		4 M	
33	IC	83	MPR – 13061		4 M	
34	IC	84	MPR – 13062		4 M	
35	IC	85	MPR – 13063		4 M	
36	IC	86	MPR – 13064		4 M	
37	IC	107	MPR – 13065		4 M	
38	IC	108	MPR – 13066		4 M	837–7302
39	IC	109	MPR – 13067		4 M	
40	IC	110	MPR – 13068		4 M	
41	IC	111	MPR – 13069		4 M	
42	IC	112	MPR – 13070		4 M	
43	IC	113	MPR – 13071		4 M	
44	IC	114	MPR – 13072		4 M	
45	IC	14	MPR – 13037	LINE OBJ	4 M	837–7302
46	IC	15	MPR – 13038		4 M	
47	IC	16	MPR – 13039		4 M	
48	IC	17	MPR – 13040		4 M	

837–7297			FLAT PIGGY		CAPACITY	
45	IC	1	MPR – 13037 – F	LINE OBJ	4 M	837–7403
46	IC	2	MPR – 13038 – F		4 M	
47	IC	3	MPR – 13039 – F		4 M	
48	IC	4	MPR – 13040 – F		4 M	

837–7343			PIGY BD		CAPACITY	
45	IC	14	MPR – 13037	LINE OBJ	4 M	837–7402
46	IC	15	MPR – 13038		4 M	
47	IC	16	MPR – 13039		4 M	
48	IC	17	MPR – 13040		4 M	

G LOC

DIP SWITCH ASSIGNMENT

COIN / CREDIT OPTION SWITCH SETTING								DIP SW #1	
OPTION		1	2	3	4	5	6	7	8
1 COIN	1 CREDIT	OFF	OFF	OFF	OFF	OFF	OFF	OFF	OFF
1 COIN	2 CREDITS	ON	OFF	OFF	OFF	ON	OFF	OFF	OFF
1 COIN	3 CREDITS	OFF	ON	OFF	OFF	OFF	ON	OFF	OFF
1 COIN	4 CREDITS	ON	ON	OFF	OFF	ON	ON	OFF	OFF
1 COIN	5 CREDITS	OFF	OFF	ON	OFF	OFF	OFF	ON	OFF
1 COIN	6 CREDITS	ON	OFF	ON	OFF	ON	OFF	ON	OFF
2 COINS	1 CREDIT	OFF	ON	ON	OFF	OFF	ON	ON	OFF
3 COINS	1 CREDIT	ON	ON	ON	OFF	ON	ON	ON	OFF
4 COINS	1 CREDIT	OFF	OFF	OFF	ON	OFF	OFF	OFF	ON
2 COINS	3 CREDITS	ON	OFF	OFF	ON	ON	OFF	OFF	ON
2 COINS	1 CREDIT 4 COINS 2 CREDITS 5 COINS 3 CREDITS 6 COINS 4 CREDITS	OFF	ON	OFF	ON	OFF	ON	OFF	ON
2 COINS	1 CREDIT 4 COINS 3 CREDITS	ON	ON	OFF	ON	ON	ON	OFF	ON
1 COIN	1 CREDIT 2 COINS 2 CREDITS 3 COINS 3 CREDITS 4 COINS 4 CREDITS 5 COINS 6 CREDITS	OFF	OFF	ON	ON	OFF	OFF	ON	ON
1 COIN	1 CREDIT 2 COINS 2 CREDITS 3 COINS 3 CREDITS 4 COINS 5 CREDITS	ON	OFF	ON	ON	ON	OFF	ON	ON
1 COIN	1 CREDIT 2 COINS 3 CREDITS	OFF	ON	ON	ON	OFF	ON	ON	ON
NOT USED		ON	ON	ON	ON	ON	ON	ON	ON
		COIN SW #1				COIN SW #2			

GAME OPTION SWITCH SETTINGS								DIP SW #2	
OPTION		1	2	3	4	5	6	7	8
GAME DIFFICULTY	NORMAL	OFF	OFF						
	EASY	ON	OFF						
	HARD	OFF	ON						
	HARDEST	ON	ON						
ADVERTISE SOUND				OFF					
				ON					
GAME TYPE	MOVING				OFF	OFF			
	COCKPIT				ON	OFF			
	UPRIGHT/SIT DOWN				OFF	ON			
	NOT USED				ON	ON			
CONTINUE GAME	YES						OFF		
	NO						ON		
INITIAL/ CONTINUE	2 / 1 CREDIT							OFF	OFF
	3 / 2 CREDITS							ON	OFF
	1 / 1 CREDIT							OFF	ON
	4 / 3 CREDITS							ON	ON

Self Test

TEST MODE

This test mainly checks the operation of the game PCB's, discovers defects if any, and also enables the monitor colors to be adjusted and the audio to be checked, etc.

1. Selection of TEST ITEMS

(1) Push the TEST SW to cause the following TEST ITEM MENU to appear:

```
—>  INDIVIDUAL
    MEMORY TEST
    INPUT TEST
    OUTPUT TEST
    MOTOR TEST
    SOUND TEST
    CRT TEST
    DIP SW. ASSIGNMENT
    BOOKKEEPING
    BACKUP RAM CLEAR
    EXIT


SELECT BY SERVICE AND PUSH TEST BUTTON
```

(2) By pushing the SERVICE button, bring the arrow mark "—>" to the desired item and press the TEST button.

(3) When the test has been completed, bring "—>" to EXIT and push the TEST button.

Bring "—>" to "INDIVIDUAL" and push the TEST button to change it to "CONTINUE." Bringing "—>" to "CONTINUE" and pushing the TEST button without pressing the SERVICE button will change the screen sequentially.

MEMORY TEST

Checks the PCB's MEMORY IC's. When the IC is in good operating condition, "GOOD" will be indicated. If there exists any malfunctioning of the IC's, "BAD" will be indicated.

MEMORY TEST
ROM TEST

IC. 24 GOOD	IC. 26 GOOD	IC. 53 GOOD
IC. 25 GOOD	IC. 27 GOOD	IC. 54 GOOD
IC. 80 GOOD		
IC. 81 GOOD		

RAM TEST

IC. 28 GOOD	IC. 55 GOOD	IC. 82 GOOD
IC. 29 GOOD	IC. 56 GOOD	IC. 83 GOOD
IC. 84 GOOD	IC. 86 GOOD	
IC. 85 GOOD	IC. 87 GOOD	

VIDEO BOARD RAM TEST

IC. 3 GOOD	IC. 27 GOOD	IC. 29 GOOD
IC. 4 GOOD	IC. 28 GOOD	IC. 30 GOOD
IC.104 GOOD		
IC.105 GOOD		

PUSH TEST BUTTON

INPUT TEST

Indicates the condition of each switch and POTENTIOMETER.

INPUT TEST

COIN #1	OFF	TEST	OFF
COIN #2	OFF	SERVICE	OFF
VULCAN	OFF	MISSILE	OFF
BURNER	OFF	START	OFF

STICK RIGHT LEFT (2) 80H

STICK UP DOWN (3) 80H

SPEED (4) 30H

PUSH TEST BUTTON

(1) Indicates the condition of each switch. Operate each switch. When the "OFF" condition is changed to "ON," the corresponding switch is in good working order.

(2) It is satisfactory if data values increase when the handle grip is moved to the right, decrease when it is moved to the left, and indicate "80H" when released.



(3) It is satisfactory if data values increase when the handle grip is moved upward, decrease when it is moved downward, and indicate "80H" when released.

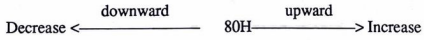

(4) It is satisfactory if the data values increase when the THROTTLE LEVER is moved forward and indicate "30H" when released.

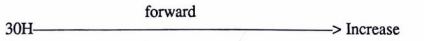

OUTPUT TEST

THE START LAMP and DANGER LAMP will flash.

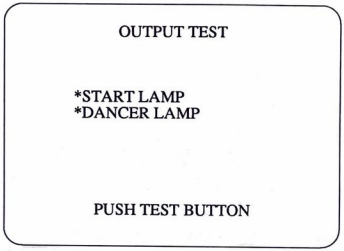

SOUND TEST

By pushing the SERVICE button, bring the "—>" to the desired position and push the TEST button.

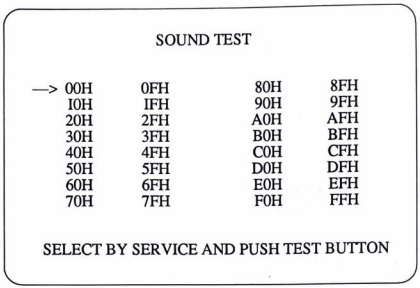

Push the TEST button to cause the following screen to appear. The sound check can be carried out by pushing the SERVICE button to bring "—>" to the desired position and then pressing the TEST button.

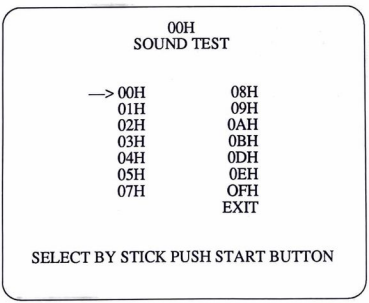

To return to the previous screen, bring "—>" to "EXIT" and push the TEST button.

00H ~ 0FH	SOUND EFFECT	80H ~ 8FH	VOICE
10H ~ 1FH		90H ~ 9FH	B.G.M
20H ~ 2FH		A0H ~ AFH	SOUND EFFECT
30H ~ 3FH		B0H ~ BFH	
40H ~ 4FH		C0H ~ CFH	VOICE
50H ~ 5FH		D0H ~ DFH	
60H ~ 6FH		E0H ~ EFH	
70H ~ 7FH		F0H ~ FFH	

CRT TEST

Monitor Adjustment Check

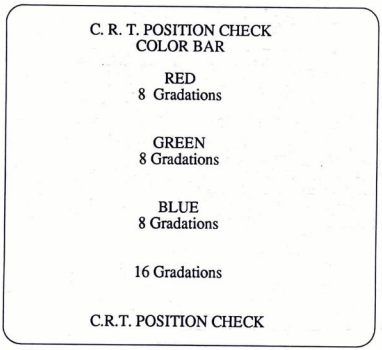

(1) Checks the C.R.T. position. Make sure that the on-screen corners are consistent and then make size adjustments.

(2) RGB color check
(The color becomes brighter from the right to the left.)

(3) Brightness check
Becomes brighter from the right (black) to the left (white).

DIP SW ASSIGNMENT

The following shows the assignment of DIP SW A and B.

DIP SWITCH ASSIGNMENT

	1	2	3	4	5	6	7	8
DIP SW A	OFF	OFF	OFF	OFF	OFF	OFF	OFF	OFF
DIP SW B	OFF	OFF	ON	OFF	OFF	OFF	ON	OFF

.A1234	COIN SW #1	1 COIN 1 CREDIT
.A5678	COIN SW #2	1 COIN 1 CREDIT
.B12	GAME DIFFICULTY	NORMAL
.B3	ADVERTISE SOUND	OFF
.B4		
.B5	CABINET TYPE	MOVING
.B6	CONTINUE GAME	YES
.B78	INITIAL CREDIT	2 CREDITS/GAME
	CONTINUE CREDIT	1 CREDIT/GAME

DIP SW A : Setting the COIN SW

DIP SW B : Setting the game difficulty, etc.

For details, refer to DIP SWITCHES.

BOOKKEEPING

Displays such data as the number of game plays, game play time, etc. Push the SERVICE button to cause the following screen to appear :

BOOKKEEPING (1/4)

COIN CHUTE #1	(1)	979
COIN CHUTE #2	(2)	0
COIN CREDITS	(3)	979
SERVICE CREDITS	(4)	1050
TOTAL CREDITS	(5)	2029
TOTAL TIME	(6)	97H 38M 16S

PUSH SERVICE BUTTON

(1) Number of coins put in COIN CHUTE 1

(2) Number of coins put in COIN CHUTE 2

(3) Number of coin credits

(4) Number of credits obtained by using the SERVICE SW

(5) Sum of (3) and (4)

(6) Total time during which the machine was energized

BOOKKEEPING (2/4)

NUMBER OF GAMES	(1)	832
CONTINUE GAMES	(2)	0

GAME TIMES

TOTAL	(3)	49H 27M 33S
AVERAGE	(4)	0H 3M 34S
LONGEST	(5)	0H 25M 21S

PUSH SERVICE BUTTON

BOOKKEEPING (3/4)

COURSE BEGINNER

NUMBER OF GAMES	(1)	0
CONTINUE CAME	(2)	0
TOTAL	(3)	0H 0M 0S
AVERAGE	(4)	0H 0M 0S
LONGEST	(5)	0H 0M 0S

COURSE MEDIUM

NUMBER OF GAMES	(1)	0
CONTINUE CAME	(2)	0
TOTAL	(3)	0H 0M 0S
AVERAGE	(4)	0H 0M 0S
LONGEST	(5)	0H 0M 0S

PUSH SERVICE BUTTON

BOOKKEEPING (4/4)

COURSE EXPERT

NUMBER OF GAMES	(1)	0
CONTINUE CAME	(2)	0
TOTAL	(3)	0H 0M 0S
AVERAGE	(4)	0H 0M 0S
LONGEST	(5)	0H 0M 0S

PUSH SERVICE BUTTON

Displays the data of all courses and each course.

Screen (2/4)

Total of all courses

Screen (3/4)

BEGINNER
MEDIUM

Screen (4/4)

EXPERT

(1) Total number of game plays

(2) Total number of CONTINUE game plays

(3) Total game play time

(4) Average game play time

(5) Longest game play time

BACKUP RAM CLEAR

The BOOKKEEPING data can be cleared. When clearing, bring "—>" to "YES" and when not clearing, to "NO, " by using the SERVICE SW, and then push the TEST button.

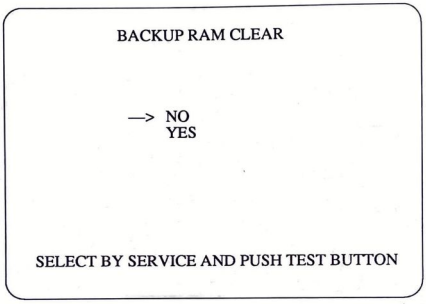

Parts List

GLC-2200 (1/5)

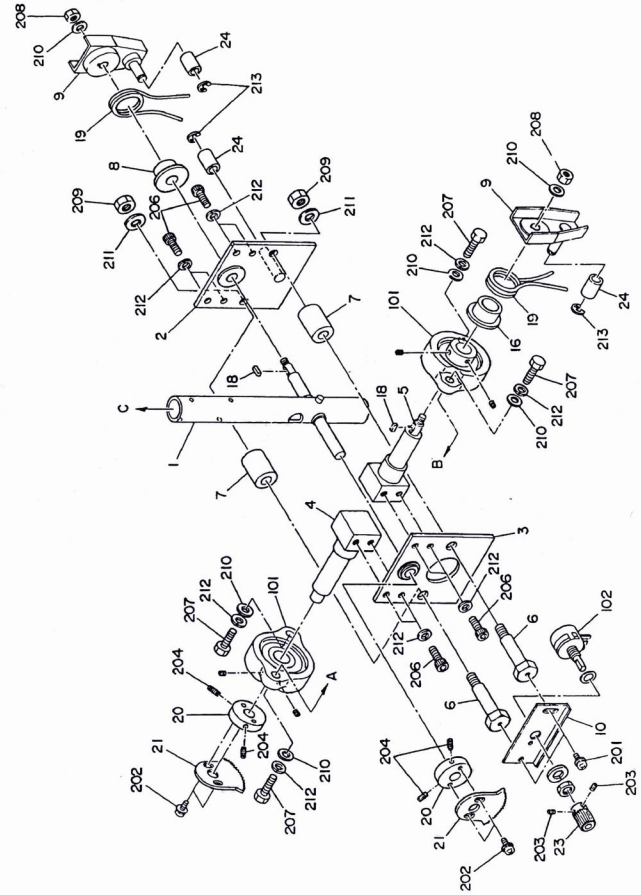
208
210
9
19
24
213
8
209
211
206
212
2
7
18
C
1
5
B
A
101
16
207
4
3
6
102
10
201
203
23
20
21
202
204

GLC-2200 (2/5)

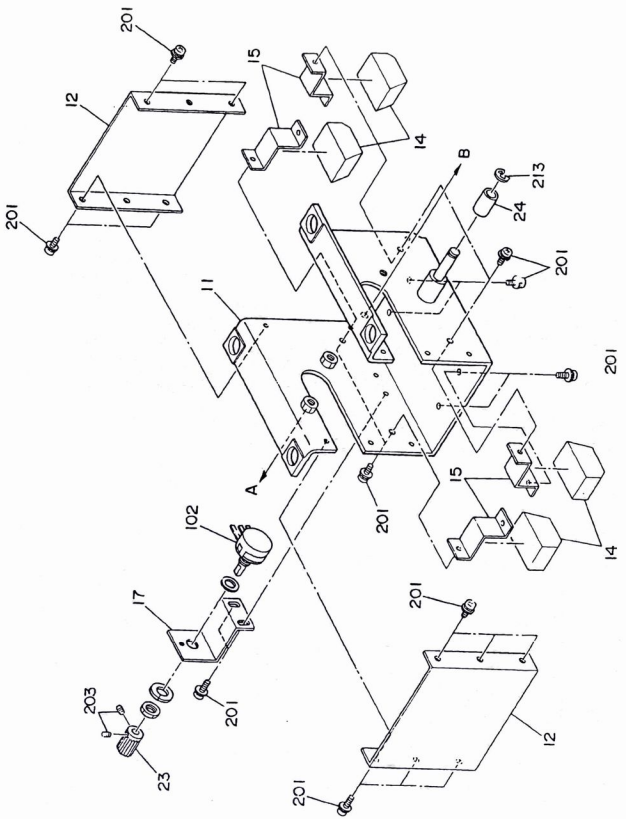

GLC-2200 (3GLC-2200 (4/5)/

GLC-2200 (4/5)

ITEM NO.	PART NO.	DESCRIPTION	NOTE
1	GLC-2201	HANDLE PIPE	
2	GLC-2202	RIGHT RLATE	
3	GLC-2203	LEFT PLATE	
4	GLC-2204	RIGHT SHAFT	
5	GLC-2205	LEFT SHAFT	
6	GLC-2206	STOPPER SCREW	
7	GLC-2207	STOPPER	
8	GLC-2208	SPACER A	
9	GLC-2209	SWING ARM	
10	GLC-2210	VOLUME BRACKET A	
11	GLC-2211	MAIN BASE	
12	GLC-2212	SIDE BRACKET	
14	GLC-2214	BUMPER B	
15	GLC-2215	BUMPER BRACKET	
16	GLC-2216	SPACER B	
17	GLC-2217	VOLUME BRACKET B	
18	GLC-2218	KEY 3×3×7	
19	GLC-2219	TORSION SPRING	
20	JI-3113	GUIDE RING	
21	601-6005	ADJUST GEAR	
22	GLC-2030	ASSY HANDLE GRIP	
23	601-5410	GEAR 15 ø6	
24	GLC-2220	RUBBER PIPE	
25	GLC-2221	MASK PLATE	
26	GLC-2222	SUB MASK	
27	GLC-2223	MASK	

GLC-2200 (5/5)

ITEM NO.	PART NO.	DESCRIPTION	NOTE
101	100-5116	BEARING ø15	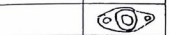
102	220-5130	VOL CONT B-5K OHM	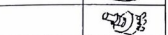
201	000-0408-FS	M SCR PH W/FS M4×8	
202	000-0412-FS	M SCR PH W/FS M4×12	
203	028-0002	SET SCR PH SPCL M3×6	
204	028-0008	SET SCR PH SPCL M4×12	
205	029-0052	TMP PRF SCR PH M5×10	
206	029-0283	HEX SKT H CAP SCR BLK M6×16	
207	030-0625	HEX BLT M6×25	
208	054-0006	U-NUT M6	
209	054-0008	U-NUT M8	
210	060-0006	FLT WSHR M6	
211	060-0008	FLT WSHR M8	
212	061-0006	SPR WSHR M6	
213	065-0006	E-RING 6mm	