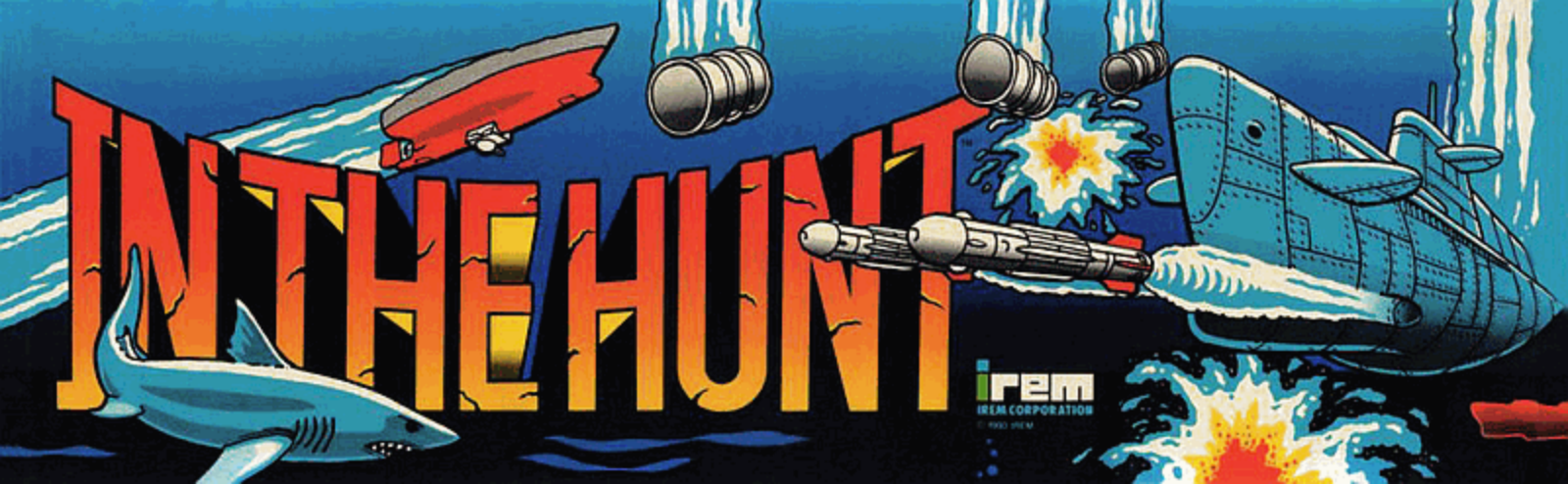
IN THE HUNT
irem
IREM CORPORATION

irem
IREM CORPORATION

# IN THE HUNT™





FIRE



MISSILE

TWO CAN PLAY SIMULTANEOUSLY BY JOINING IN AT ANY TIME.



DEFEAT ENEMIES TO OBTAIN POWER-UP ITEMS.







TREASURE BALLS ARE RELEASED FROM CAPSULES - COLLECT FOR BONUS POINTS.



IREM AMERICA
CORPORATION

# IN THE HUNT



## OWNERS MANUAL

# VIDEO GAME OPERATOR:

## Don't Get Involved In A Federal Crime. Don't Buy Or Operate Copy Or Unauthorized Boards In Your Games.

# Warning



*Every operator who buys or operates a counterfeit or unauthorized board (imported or domestic) is contributing to the end of our industry and committing a FEDERAL CRIME.*

*New criminal laws have recently been enacted that provide for maximum penalties of $250,000 or five years in prison or both, per offense. EACH GAME IS A SEPARATE OFFENSE.*




**WARNING**

Federal law provides severe civil and criminal penalties for the unauthorized reproduction, distribution, or exhibition of copyrighted motion picture works and video games.

The Federal Bureau of Investigation investigates allegations of criminal copyright infringement.

*If you have any information about any unauthorized games in the United States, contact your local FBI or,*

American Amusement Machine Association

205 The Strand
Suite 3
Alexandria, Virginia 22314
(703) 548-8044

All information will be treated in confidence.

# SAFETY

The following topics should be carefully studied to insure maximum reliability and safety for both serviceman and customer. Shock Hazard: The high voltage on the monitor may be very dangerous. Extreme caution must be used when working with or around the monitors. Be certain that the grounding strap is attached to the monitor frame. The picture tube in the monitor is also a hazard and should be handled with care. Do not strike, scratch, or subject the tube to more than moderate pressure as it may implode serious injury from flying glass. Be certain that the control panel, power supply monitor, and coin door are all properly grounded to the ground wire inside the line cord. Do not remove ground prong off plug end.

# PARTS LIST

1-Manual
1 - Marquee Art
1 - In the Hunt PCB
1 - Control Panel Overlay
1 - FCC Label

**IREM AMERICA CORPORATION®**

8335 154th Avenue NE
Redmond, WA 98052
(206) 882-1093
FAX (206) 883-8038

**FOR SERVICE CONTACT:**

Your authorized Irem America Corporation® Distributor
or
**SUMMIT SERVICE**
2274 University Avenue
St. Paul, MN 55114
(612) 645-9077

# WARRANTY REPAIRS

Irem America Corporation PCB have a 90 day warranty from date of shipment. This includes all failures except those caused by the installer such as miswiring.

All PCB must be returned by an authorized Irem America Corporation distributor. A Return Material Authorization must be obtained from Summit Service prior to returning material. A Purchase Order must also be given to Summit Service at this time. The package must be clearly marked with the RMA number.

10. Disassemble the control panel of all the hardware. Do not remove the old panel overlay. Determine where to place the new joystick and buttons if they must be repositioned. Then, cut new holes.

    **NOTE: If you are going to use plexiglass over the control panel, we suggest that you use a good 1/8" polycarbonate with a scratch resistant coating. We recommend GENERAL ELECTRIC LEXAN MR5 with margard or TUFFAK CM-2. These do not crack or break with abuse.**

    Cut and drill plex as needed. Remove the old control panel overlay carefully and apply the new overlay on top of the old glue. Use an **Exacto** knife to cut out any button or bolt holes. Apply necessary decals over appropriate buttons. Now assemble the control panel.

11. Bolt the control panel to the cabinet. Now connect the appropriate wires to the correct switches. Connect the 1 player and 2 player start wires.

12. Be sure to install the FCC stickers on the back of the cabinet.

13. Power up the game. Look over your installation for errors, and then apply power, listening for unusual sounds. Check for smoke or sparks. If everything is okay, wire tie all wires to form a nice, neat wiring harness. Clean the cabinet inside and out. Measure the +5 volts on the furthest point from the edge connector and adjust 5 volts to 5.05 volts. Use a tinted plex over the monitor is there are burns in the screen. We suggest bronze or grey tinted plex. Touch up the cabinet with fresh paint, and then repair all cabinet dents or chips, using an auto body product called **Duraglass.** This is similar to bondo. You can consult your local auto body shop or auto parts supplier for this product, as well as advice on how to use it.

14. Be sure your ground plug is good. All metal exposed to the player must be grounded (coin door, control panel, etc.) including all metal inside exposed.

# P.C. BOARD SPECIFICATIONS

**POWER SUPPLY:**

Voltage 5V ± 5%
12V ± 10%

Ampere 5V MAX. 5A
12V MAX. 1A

**MONITOR INTERFACE:**

| | |
|---|---|
| Video Signals | TTL Positive |
| Sync Signals | TTL Negative (Composite Sync) |
| Horizontal Frequency | 15.723KHz |
| H.Period | 63.6 μs |
| H.Blank | 15.6 μs |
| H.Sync Pulse | 6.0 μa |
| Vertical Frequency | 60.0Hz |
| V.Period | 16.663ms |
| V.Blank | 1.40ms |
| V.Sync Pulse | 318 μs |

| TOLERABLE | WHILE OPERATING | IN STORAGE |
|---|---|---|
| TEMPERATURE RANGE | 0 TO 50°C | -5 TO 60°C |
| RELATIVE HUMIDITY | 20 TO 70% | NO MORE THAN 80% |
| VIBRATION RANGE | NO MORE THAN 0.5G | NO MORE THAN 1.0G |
| TOLERANCE FOR FALLING | NO MORE THAN 0 cm | (When Packed) NO MORE THAN 50cm |

## IN THE HUNT®
## JAMMA EDGE CONNECTOR CABLE

| COMPONENT SIDE | | | SOLDER SIDE | | |
|---|---|---|---|---|---|
| FUNCTION | COLOR | POS | POS | COLOR | FUNCTION |
| GROUND | BLK | 1 | A | BLK | GROUND |
| GROUND | BLK | 2 | B | BLK | GROUND |
| +5 VOLTS | RED | 3 | C | RED | +5 VOLTS |
| +5 VOLTS | RED | 4 | D | RED | +5 VOLTS |
| | BRN | 5 | E | BRN | |
| +12 VOLTS | BLU | 6 | F | BLU | +12 VOLTS |
| PREVENT | | 7 | H | | PREVENT |
| COIN 1 | BLU/BRN | 8 | J | WHT/PUR | COIN 2 |
| GROUND | | 9 | K | | GROUND |
| AUDIO POS + | WHT/BLK | 10 | L | BLK | AUDIO NEG - |
| N.C. | | 11 | M | | N.C. |
| VIDEO RED | RED | 12 | N | GRN | VIDEO GRN |
| VIDEO BLU | BLU | 13 | P | WHT | VIDEO SYNC* |
| VIDEO GND | BLK | 14 | R | BRN/WHT | SERV. SW. |
| N.C. | YEL | 15 | S | WHT/BRN | N.C. |
| COIN INPUT 1 | WHT/YEL | 16 | T | GRN/YEL | COIN INPUT 2 |
| START 1 | PNK/BLK | 17 | U | RED/BLK | START 2 |
| 1 P UP | ORG/BLU | 18 | V | BRN/BLU | 2 P UP |
| 1 P DOWN | GRN/ORG | 19 | W | ORG/WHT | 2 P DOWN |
| 1 P LEFT | GRN/BLU | 20 | X | ORG/GRN | 2 P LEFT |
| 1 P RIGHT | RED/YEL | 21 | Y | WHT/ORG | 2 P RIGHT |
| 1 P SW A Forward Attack | RED/WHT | 22 | Z | BRN/BLK | 2 P SW A Forward Attack |
| 1 P SW B Up/Down Attack | WHT/RED | 23 | a | YEL/WHT | 2 P SW B Up/Down Attack |
| N.C. | YEL/BLK | 24 | b | BRN/GRN | N.C. |
| N.C. | | 25 | c | | N.C. |
| N.C. | | 26 | d | | N.C. |
| GROUND | BLK | 27 | e | BLK | GROUND |
| GROUND | BLK | 28 | f | BLK | GROUND |
| | | | | | |

* Video sync composite negative

* Use a horizontally positioned CRT monitor and two 8-way joysticks, each with two push button switches.

## KD/DYNAMO — UNIVERSAL VIDEO WIRING
## 56 PIN EDGE CONN. PIN-OUT CHART
## (JAMMA COMPATIBLE)

| COMPONENT SIDE | | | SOLDER SIDE | | |
|---|---|---|---|---|---|
| FUNCTION | COLOR | POS | POS | COLOR | FUNCTION |
| GROUND | BLK | 1 | A | BLK | GROUND |
| GROUND | BLK | 2 | B | BLK | GROUND |
| +5 VOLTS | RED | 3 | C | RED | +5 VOLTS |
| +5 VOLTS | RED | 4 | D | RED | +5 VOLTS |
| -5 VOLTS | WHITE | 5 | E | WHITE | -5 VOLTS |
| +12 VOLTS | YELLOW | 6 | F | YELLOW | +12 VOLTS |
| KEY | | 7 | H | | KEY |
| COIN 1 | BRN | 8 | J | | COIN 2 |
| COIN LOCK 1 | RED | 9 | K | | COIN LOCK 2 |
| SP (+) | WHT | 10 | L | WHT/BLK | SP (-) |
| N.C. | BLUE-OPTION | 11 | M | OP. BLU/BLK | N.C. |
| VIDEO RED | RED | 12 | N | GRN | VIDEO GRN |
| VIDEO BLU | BLU | 13 | P | GRAY | VIDEO SYNC* |
| VIDEO GND | BLK | 14 | R | RED/BLACK | SERV. SW. |
| TEST SW. | BROWN | 15 | S | OP. BRN/BLK | TILT SW. |
| COIN SW. 1 | WHITE | 16 | T | | COIN SW. 2 |
| START 1 | GRAY | 17 | U | WHITE/GRAY | START 2 |
| 1 P UP | VIOLET | 18 | V | WHITE/VIOLET | 2 P UP |
| 1 P DOWN | BLUE | 19 | W | WHITE/BLUE | 2 P DOWN |
| 1 P LEFT | GREEN | 20 | X | WHITE/GREEN | 2 P LEFT |
| 1 P RIGHT | YELLOW | 21 | Y | WHT/YELLOW | 2 P RIGHT |
| 1 P PUSH 1 | ORANGE | 22 | Z | WHT/ORANGE | 2 P PUSH 1 |
| 1 P PUSH 2 | RED | 23 | a | WHITE/RED | 2 P PUSH 2 |
| 1 P PUSH 3 | BROWN | 24 | b | WHT/BROWN | 2 P PUSH 3 |
| N.C. | BLUE/WHT | 25 | c | GREEN/WHT | N.C. |
| N.C. | RED/WHT | 26 | d | YELLOW/WHT | N.C. |
| GROUND | BLK | 27 | e | BLK | GROUND |
| GROUND | BLK-OPTION | 28 | f | BLK-OPTION | GROUND |
| | | | | | |

* Video sync composite negative

# IN THE HUNT® DIP SWITCH SPECIFICATIONS

**DIP SWITCH 1**

| | | 1 | 2 | 3 | 4 | 5 | 6 | 7 | 8 |
|---|---|---|---|---|---|---|---|---|---|
| NUMBER OF LIVES GIVEN AT START | 3 | OFF | OFF | | | | | | |
| | 2 | ON | OFF | | | | | | |
| | 4 | OFF | ON | | | | | | |
| | 5 | ON | ON | | | | | | |
| DIFFICULTY | NORMAL | | | OFF | OFF | | | | |
| | EASY | | | ON | OFF | | | | |
| | HARD | | | OFF | ON | | | | |
| | VERY EASY | | | ON | ON | | | | |
| SOUND IN ATTRACTING MODE | NO | | | | | | | OFF | |
| | YES | | | | | | | ON | |
| DIAGNOSTIC TEST | NO | | | | | | | | OFF |
| | YES | | | | | | | | ON |

**DIP SWITCH 2**

| | | | 1 | 2 | 3 | 4 | 5 | 6 | 7 | 8 |
|---|---|---|---|---|---|---|---|---|---|---|
| FLIP PICTURE | | NO | OFF | | | | | | | |
| | | YES | ON | | | | | | | |
| CABINET TYPE | | NOT USED | | | | | | | | |
| | | NOT USED | | | | | | | | |
| COIN CHUTES | | NOT USED | | | | | | | | |
| | | NOT USED | | | | | | | | |
| | COIN MODE 1 | 1 COIN / 1 PLAY | | | | OFF | OFF | OFF | OFF | OFF |
| | | 2 COINS / 1 PLAY | | | | OFF | ON | OFF | OFF | OFF |
| | | 3 COINS / 1 PLAY | | | | OFF | OFF | ON | OFF | OFF |
| | | 4 COINS / 1 PLAY | | | | OFF | ON | ON | OFF | OFF |
| | | 5 COINS / 1 PLAY | | | | OFF | OFF | OFF | ON | OFF |
| | | 6 COINS / 1 PLAY | | | | OFF | ON | OFF | ON | OFF |
| | | 1 COIN / 2 PLAYS | | | | OFF | OFF | ON | ON | OFF |
| | | 1 COIN / 3 PLAYS | | | | OFF | ON | ON | ON | OFF |
| | | 1 COIN / 4 PLAYS | | | | OFF | OFF | OFF | OFF | ON |
| | | 1 COIN / 5 PLAYS | | | | OFF | ON | OFF | OFF | ON |
| | | 1 COIN / 6 PLAYS | | | | OFF | OFF | ON | OFF | ON |
| | | 2 COINS / 3 PLAYS | | | | OFF | ON | ON | OFF | ON |
| | | 3 COINS / 2 PLAYS | | | | OFF | OFF | OFF | ON | ON |
| | | 4 COINS / 3 PLAYS | | | | OFF | ON | OFF | ON | ON |
| | | 1 COIN CONTINUE | | | | OFF | OFF | ON | ON | ON |
| | | FREE PLAY | | | | OFF | ON | ON | ON | ON |
| | COIN MODE 2 | * A 1 COIN / 1 PLAY | | | | ON | OFF | OFF | | |
| | | * A 2 COINS / 1 PLAY | | | | ON | ON | OFF | | |
| | | * A 3 COINS / 1 PLAY | | | | ON | OFF | ON | | |
| | | * A 5 COINS / 1 PLAY | | | | ON | ON | ON | | |
| | | ** B 1 COIN / 2 PLAYS | | | | ON | | | OFF | OFF |
| | | ** B 1 COIN / 3 PLAYS | | | | ON | | | ON | OFF |
| | | ** B 1 COIN / 5 PLAYS | | | | ON | | | OFF | ON |
| | | ** B 1 COIN / 6 PLAYS | | | | ON | | | ON | ON |

* COIN CHUTE A **COIN CHUTE B

- Please turn off the power switch before changing the DIP SW setting, or the change may not take effect.
- Continue Coin is the mode which starts the game with 2 coins, but continues it with 1 coin alone. When this mode is set, no other coin modes can be set.
- Dip SW 3 is not in use.

**1. Monitor Sync**

If your monitor does not have dual polarity positions for sync, you may use on of the following methods to get your game going.

CURE 1: Install a simple one I.C. Circuit on your logic board. This I.C. may be "piggy backed" on to another 7404 series chip for power by bending up all but the two power pins so that they are parallel to the top surface of the new I.C. and then connecting the power pins only to the existing chip. *(See Fig. 1)* Next connect the sync wires as shown in Fig. 2. *(Note: Figure 2 shows a hookup for either **composite** or **separate** syncs.)*

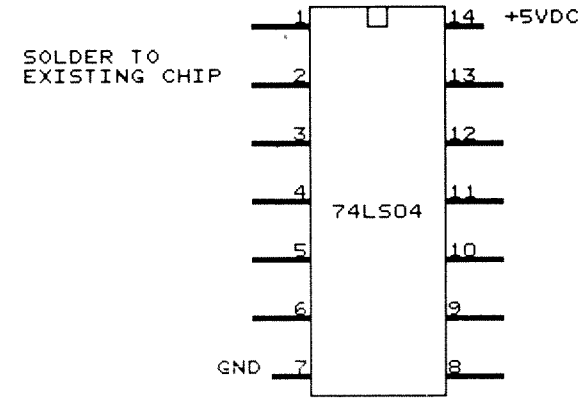


FIG. 1

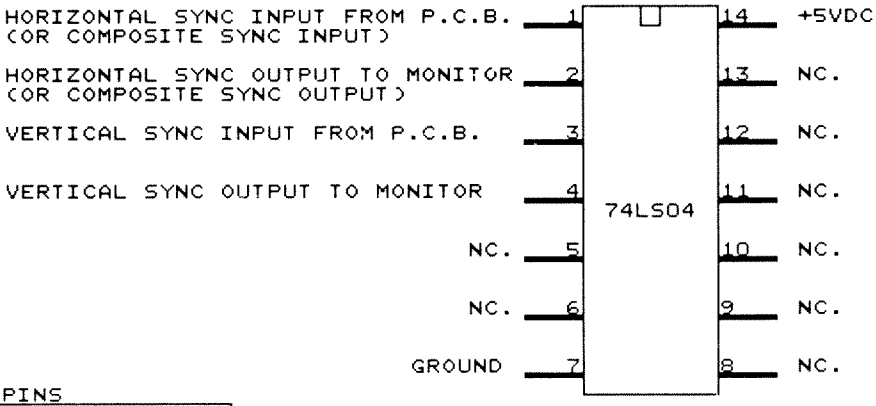


FIG. 2

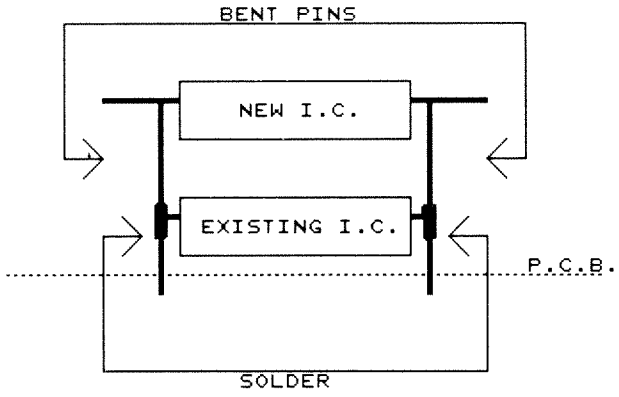


CURE 2: Used for Wells-Gardner Video-Sync boards with positive sync connections only. *(Vertical mount board 85x14 OB.)*

Cut the traces on the solder side of the board between input pins 5 & 6 to the unbanded *(anode)* ends of diodes X201 & X202.

Add MPSA 56 transistor as follows:

Collector to anode leads of diodes X201 & X202. Base pins 5 & 6 of the video input connector. Emitter to cathode *(banded)* lead of zener diode ZD201.

Insert a 1N4148 diode - cathode to the emitter of the MPSA56 and anode to the base. *(See Fig. 3)*

FIG. 3

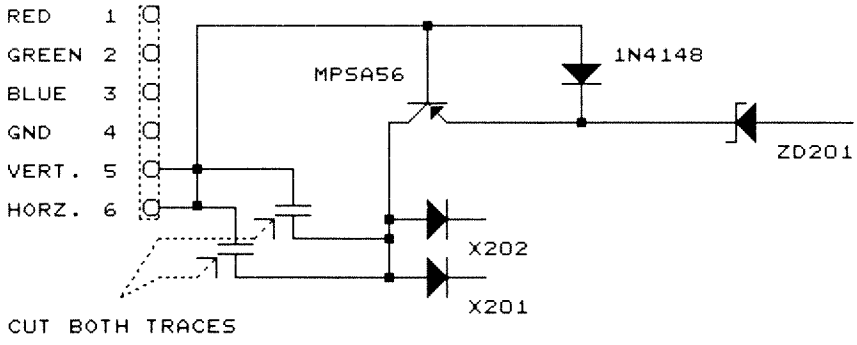

**2. Horizontal Tearing**

CAUSE: The negative sync signal of most logic sets are slightly different than the GO7-CBO monitor negative sync inputs. The result of this mismatch is a horizontal "wave" or "curl".

CURE 1: On the monitor deflection board, replace C303 with a 10uf 25V radial lead capacitor with the positive lead towards the collector of X305. *(CAUTION: be sure to check this step as the original cap is not polarized.)* Then replace C501 with the cap removed from the C303 location.

CURE 2: Connect 1N4148 fast-switching diodes across both the positive and negative sync inputs to the monitor. *(See Fig. 4)* NOTE: Both diodes must be installed or you will not have vertical stability.

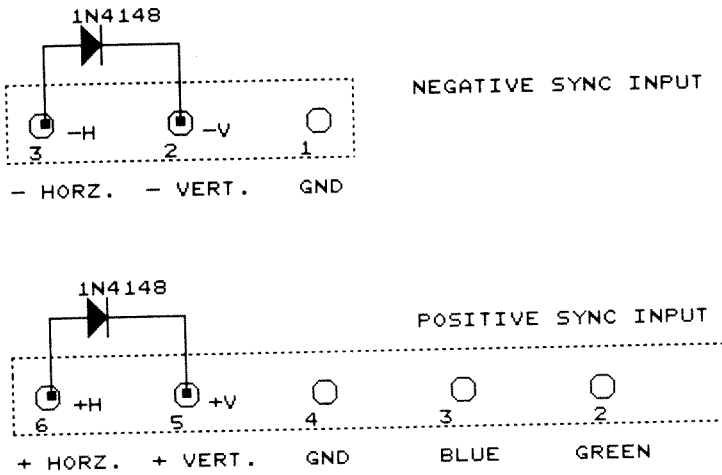


FIG. 4

CURE 3: Join negative sync inputs J2 and J3 together with a jumper. Locate W102 and install a jumper from W102 to either J2 or J3.

CURE 4: For Wells-Gardner K4600 series monitors.
Replace C356 (4 7uf 25V) on the Horizontal/vertical board *(vertically mounted board nearest the flyback transformer)* and center the horizontal hold pot. Turn L351 for the best horizontal stability and fine-tune with the horizontal width pot.

## COIN COUNTER DIAGRAM

If only one coin counter is to be used install two diodes in the following manner:

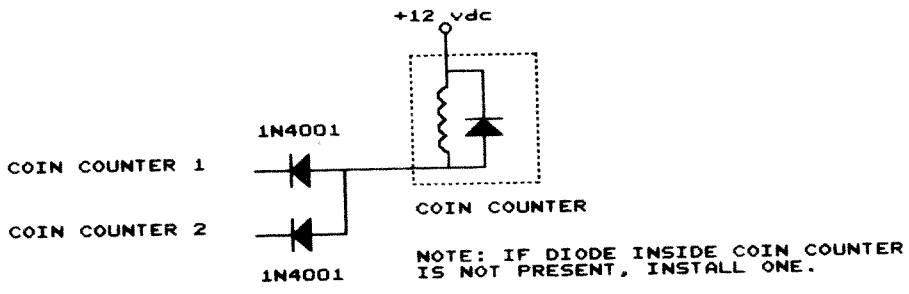

# IN THE HUNT® DIP SWITCH SPECIFICATIONS

**DIP SWITCH 1**

| | | 1 | 2 | 3 | 4 | 5 | 6 | 7 | 8 |
|---|---|---|---|---|---|---|---|---|---|
| NUMBER OF LIVES GIVEN AT START | 3 | OFF | OFF | | | | | | |
| | 2 | ON | OFF | | | | | | |
| | 4 | OFF | ON | | | | | | |
| | 5 | ON | ON | | | | | | |
| DIFFICULTY | NORMAL | | | OFF | OFF | | | | |
| | EASY | | | ON | OFF | | | | |
| | HARD | | | OFF | ON | | | | |
| | VERY EASY | | | ON | ON | | | | |
| SOUND IN ATTRACTING MODE | NO | | | | | | | OFF | |
| | YES | | | | | | | ON | |
| DIAGNOSTIC TEST | NO | | | | | | | | OFF |
| | YES | | | | | | | | ON |

**DIP SWITCH 2**

| | | | 1 | 2 | 3 | 4 | 5 | 6 | 7 | 8 |
|---|---|---|---|---|---|---|---|---|---|---|
| FLIP PICTURE | NO | | OFF | | | | | | | |
| | YES | | ON | | | | | | | |
| CABINET TYPE | NOT USED | | | | | | | | | |
| | NOT USED | | | | | | | | | |
| COIN CHUTES | NOT USED | | | | | | | | | |
| | NOT USED | | | | | | | | | |
| COIN MODE 1 | 1 COIN / 1 PLAY | | | | | OFF | OFF | OFF | OFF | OFF |
| | 2 COINS / 1 PLAY | | | | | OFF | ON | OFF | OFF | OFF |
| | 3 COINS / 1 PLAY | | | | | OFF | OFF | ON | OFF | OFF |
| | 4 COINS / 1 PLAY | | | | | OFF | ON | ON | OFF | OFF |
| | 5 COINS / 1 PLAY | | | | | OFF | OFF | OFF | ON | OFF |
| | 6 COINS / 1 PLAY | | | | | OFF | ON | OFF | ON | OFF |
| | 1 COIN / 2 PLAYS | | | | | OFF | OFF | ON | ON | OFF |
| | 1 COIN / 3 PLAYS | | | | | OFF | ON | ON | ON | OFF |
| | 1 COIN / 4 PLAYS | | | | | OFF | OFF | OFF | OFF | ON |
| | 1 COIN / 5 PLAYS | | | | | OFF | ON | OFF | OFF | ON |
| | 1 COIN / 6 PLAYS | | | | | OFF | OFF | ON | OFF | ON |
| | 2 COINS / 3 PLAYS | | | | | OFF | ON | ON | OFF | ON |
| | 3 COINS / 2 PLAYS | | | | | OFF | OFF | OFF | ON | ON |
| | 4 COINS / 3 PLAYS | | | | | OFF | ON | OFF | ON | ON |
| | 1 COIN CONTINUE | | | | | OFF | OFF | ON | ON | ON |
| | FREE PLAY | | | | | OFF | ON | ON | ON | ON |
| COIN MODE 2 | 1 COIN / 1 PLAY | * A | | | | ON | OFF | OFF | | |
| | 2 COINS / 1 PLAY | | | | | ON | ON | OFF | | |
| | 3 COINS / 1 PLAY | | | | | ON | OFF | ON | | |
| | 5 COINS / 1 PLAY | | | | | ON | ON | ON | | |
| | 1 COIN / 2 PLAYS | ** B | | | | ON | | | OFF | OFF |
| | 1 COIN / 3 PLAYS | | | | | ON | | | ON | OFF |
| | 1 COIN / 5 PLAYS | | | | | ON | | | OFF | ON |
| | 1 COIN / 6 PLAYS | | | | | ON | | | ON | ON |

* COIN CHUTE A **COIN CHUTE B

- Please turn off the power switch before changing the DIP SW setting, or the change may not take effect.
- Continue Coin is the mode which starts the game with 2 coins, but continues it with 1 coin alone. When this mode is set, no other coin modes can be set.
- Dip SW 3 is not in use.

# Diagnostic Test

## (1) Test Items

The following tests are made:

1 RAM Test
2 ROM Test
3 I/O PORT Test
4 DIP Switch Test
5 SOUND Test
6 CHARACTER Test
7 COLOR Test
8 CROSS HATCH Test

As soon as the number 8 of the DIP Switch 1 is turned "ON" and the Power Switch is switched on, the Test 1 and 2 are started.

To finish the Tests, turn off the Power Switch and then the number 8 of the DIP Switch 1 to "OFF".

## (2) Test Procedures

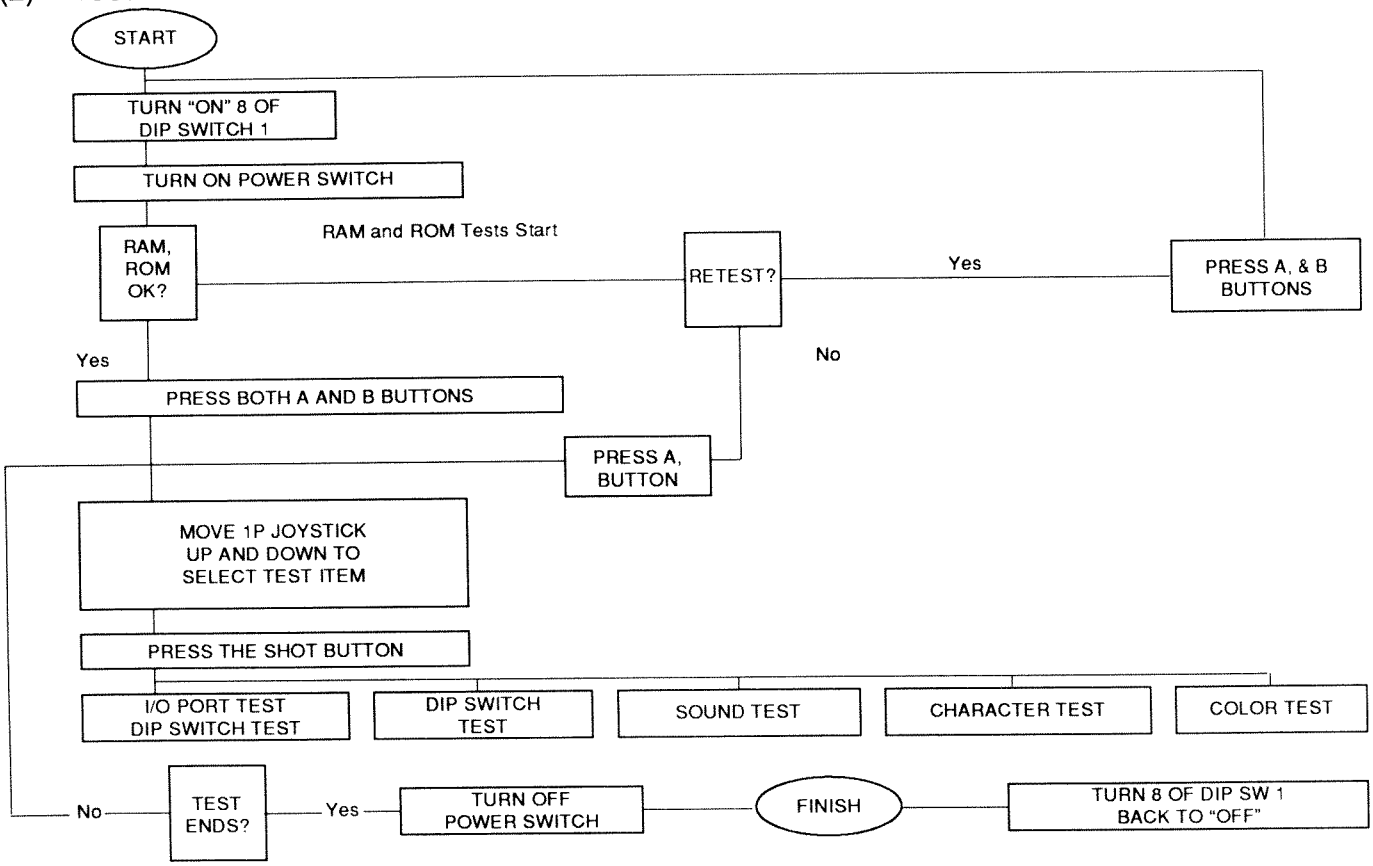


## (3) RAM and ROM TEST

Although the picture does not appear on the screen and only verious patterns appear on it for a while after turning on the power switch, RAM's for the picture are being tested during this time. If RAM's are found OK by the test, "RAM OK" and "ROM OK" will be displayed on the screen.

If RAM(s) is (are) not good, "RAM NG □" will appear on the screen.

The figure following the "RAM NG" indicates the location of the defective RAM.

00 WORK RAM (BYTE)
01 WORK RAM (WORD)
02 V_RAM A (WORD)
03 V_RAM B (WORD)
04 V_RAM C (WORD)
05 V_RAM D (WORD)
06 RASTER SCROLL RAM A (WORD)
07 RASTER SCROLL RAM B (WORD)
08 RASTER SCROLL RAM C (WORD)
09 PALLETE BUFFER BANK 0 (WORD)
10 PALLETE BUFFER BANK 1 (WORD)
11 PALLETE BUFFER BANK 2 (WORD)
12 PALLETE BUFFER BANK 3 (WORD)
13 OBJECT BUFFER BANK 0 (WORD)
14 OBJECT BUFFER BANK 1 (WORD)
15 PALLETE RAM BANK 0 (WORD)
22 PALLETE RAM BANK 7
23 OBJECT RAM (WORD)

If ROM(s) is(are) defective, "ROM NG □" will appear on the screen.

When RAM's and ROM's are found all good after completing this RAM and ROM TEST, you can move over to the next test item by pressing the 1P and 2P start buttons.

In case any RAM(s) or ROM(s) is(are) found faulty after completing the RAM and ROM TEST, press the 1P start button to repeat the test. Press the 2P start button to go to the next test.

### (4) Display of the Test Items

The following test items are shown so that you may select a test item you want by moving the 1P joystick up and down:

1. I/O
2. SOUND
3. CHARACTER
4. COLOR
5. CROSS HATCH
6. OPTION
7. EXIT

Press the Shot button to get the test indicated in red started. Press the 1P and 2P start buttons to end the same test. Press the 1P start button to start "OPTION" test.

### (5) I/O Port Test

The status when each joystick button, and coin is turned "ON" is shown.

| | 8 | 7 | 6 | 5 | 4 | 3 | 2 | 1 | 8 | 7 | 6 | 5 | 4 | 3 | 2 | 1 |
|---|---|---|---|---|---|---|---|---|---|---|---|---|---|---|---|---|
| IN PORT 1 | 0 | 0 | 0 | 0 | 0 | 0 | 0 | 0 | 0 | 0 | 0 | 0 | 0 | 0 | 0 | 0 |
| IN PORT 2 | 0 | 0 | 0 | 0 | 0 | 0 | 0 | 0 | 0 | 0 | 0 | 0 | 0 | 0 | 0 | 0 |
| IN PORT 3 | 0 | 0 | 0 | 0 | 0 | 0 | 0 | 0 | 0 | 0 | 0 | 0 | 0 | 0 | 0 | 0 |
| DIP SWITCH | 0 | 0 | 0 | 0 | 0 | 0 | 0 | 0 | 1 | 0 | 0 | 0 | 0 | 0 | 0 | 0 |

(0-OFF, 1-ON)

### (6) Sound Test

The screen shows the number of each sound and the test is made about whether the corresponding sound is given. Push down the 1P joystick to move over to the next sound's test. To check the same sound, press button A for 1P.

### (7) Character Test

The player character is displayed in the center of the screen.

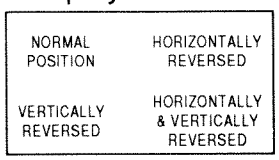


Make sure that the character is shown in four different positions, each vertically and horizontally reversed, as shown on the left.

### (8) Color Test

By moving down the 1P joystick, the test can be advanced like
1—2—3—4—5—6—7—8—9—10—1, test of colors, balance and distortion on the monitor screen.

1 The whole screen shows only blue color.
2 The whole screen shows only red color.
3 The whole screen shows only magenta color.
4 The whole screen shows only green color.
5 The whole screen shows only cyan color.
6 The whole screen shows only yellow color.
7 The whole screen shows only white color.
8 Figure A is displayed on the screen.
9. Figure B is displayed on the screen.
10. Figure C is displayed on the screen.

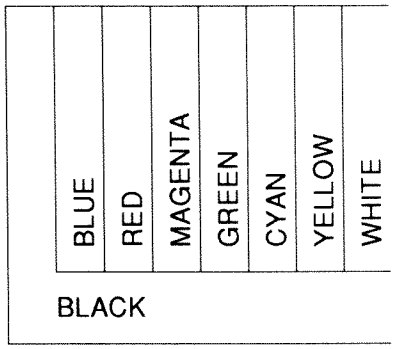


### (9) Cross Hatch Test

The white lines represent CROSS HATCH PATTERN on the screen.

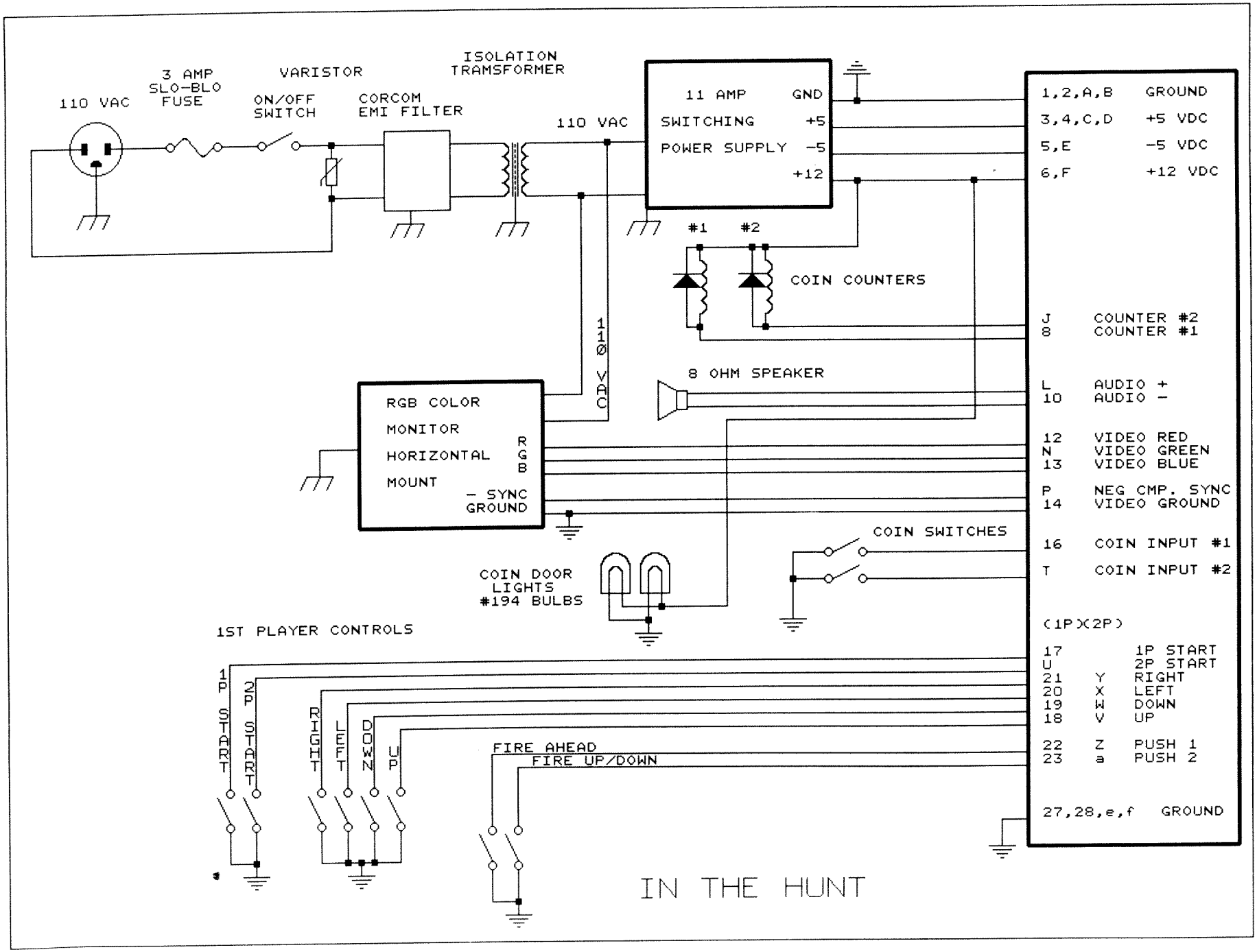
110 VAC
3 AMP SLO-BLO FUSE
VARISTOR
ON/OFF SWITCH
CORCOM EMI FILTER
ISOLATION TRAMSFORMER
110 VAC
11 AMP SWITCHING POWER SUPPLY
GND
+5
-5
+12
1,2,A,B GROUND
3,4,C,D +5 VDC
5,E -5 VDC
6,F +12 VDC
#1
#2
COIN COUNTERS
J COUNTER #2
8 COUNTER #1
110 VAC
8 OHM SPEAKER
L AUDIO +
10 AUDIO -
RGB COLOR MONITOR HORIZONTAL MOUNT
R
G
B
- SYNC
GROUND
12 VIDEO RED
N VIDEO GREEN
13 VIDEO BLUE
P NEG CMP. SYNC
14 VIDEO GROUND
COIN SWITCHES
16 COIN INPUT #1
T COIN INPUT #2
COIN DOOR LIGHTS #194 BULBS
1ST PLAYER CONTROLS
(1P)(2P)
17 1P START
U 2P START
21 Y RIGHT
20 X LEFT
19 W DOWN
18 V UP
1P START
2P START
RIGHT
LEFT
DOWN
UP
FIRE AHEAD
FIRE UP/DOWN
22 Z PUSH 1
23 a PUSH 2
27,28,e,f GROUND
IN THE HUNT