
ATARI
MILLIPEDE
ATARI

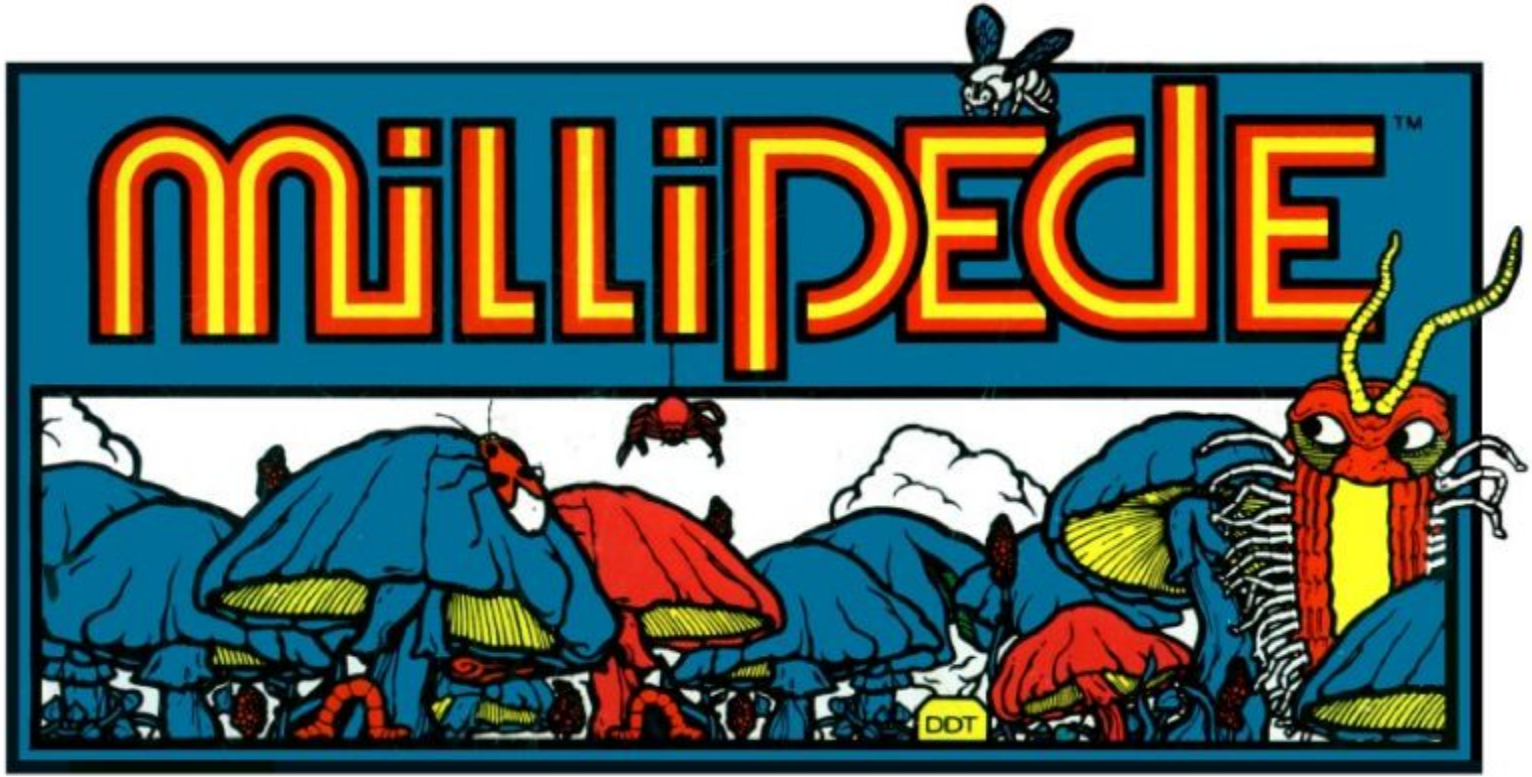
MILLIPEDE
DDT

INSTRUCTIONS

- Shoot to destroy advancing creatures for points.
- Collisions with any creature will destroy you.
- In a two player game, players alternate until supply of lives is exhausted.
- Hold fire button down for repeat fire.
- Shoot DDT bombs to set off poisonous cloud. Any insect destroyed by this cloud is worth 3 times its normal value.

SCORING

	Spider	300, 600, 900, 1200 points
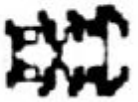	Earwig	1000 points
	Dragonfly	500 points
	Mosquito	400 points
	Beetle	300 points
	Bee	200 points
	Inchworm	100 points
	Millipede Head	100 points
	Millipede Body	10 points
	DDT Bomb	800 points
	Mushroom	1 point

INSTRUCTIONS

- Shoot to destroy advancing creatures for points.
- Collisions with any creature will destroy you.
- In a two player game, players alternate until supply of lives is exhausted.
- Hold fire button down for repeat fire.
- Shoot DDT bombs to set off poisonous cloud. Any insect destroyed by this cloud is worth 3 times its normal value.

SCORING

	Spider	300, 600, 900, 1200 points
	Earwig	1000 points
	DDT Bomb	800 points
	Dragonfly	500 points
	Mosquito	400 points
	Beetle	300 points
	Bee	200 points
	Inchworm	100 points
	Millipede Head	100 points
	Millipede Body	10 points
	Mushroom	1 point

TM-217
1st printing

ATARI®

MILLIPEDE

Operation, Maintenance, and Service Manual

Complete with Illustrated Parts Lists

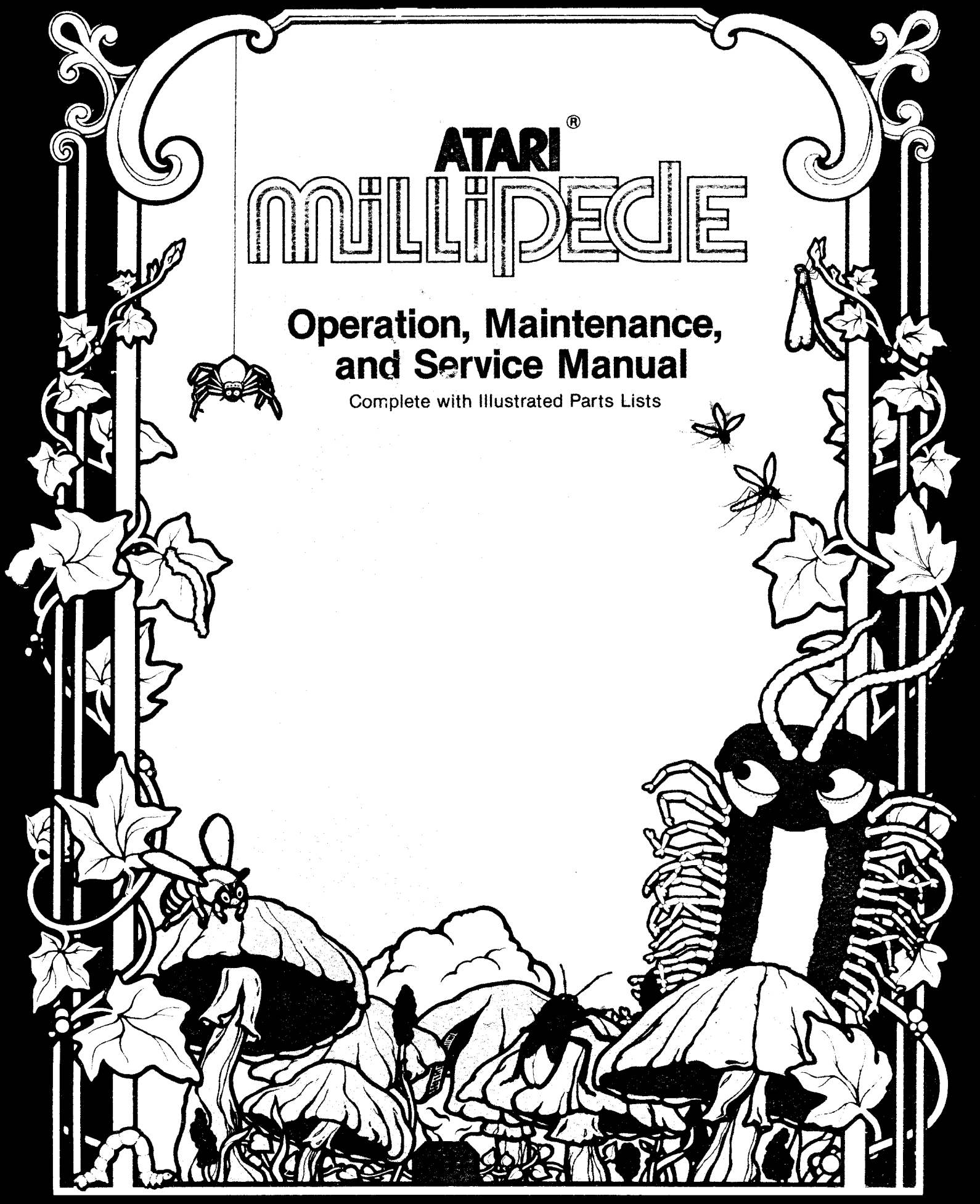

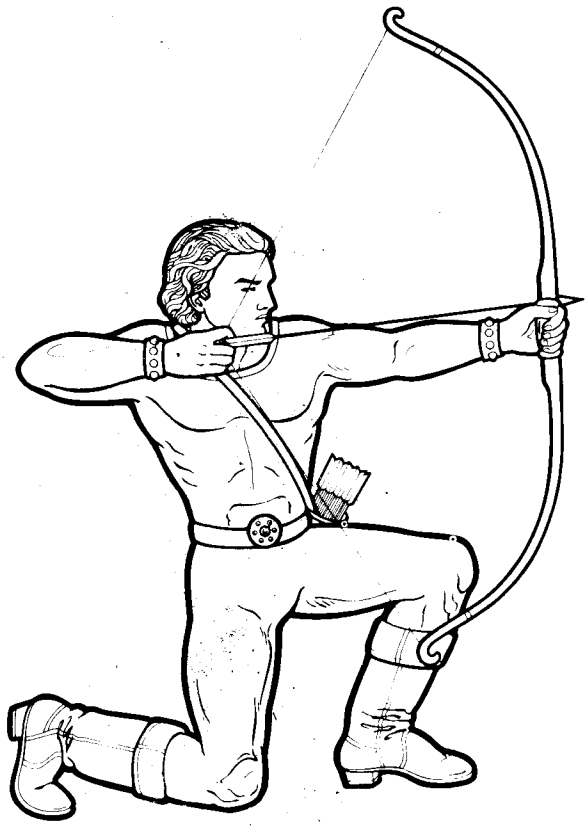

ATARI® MILLIPEDE™

Operation, Maintenance, and Service Manual

© ATARI INC. 1982

© **1982 by Atari,Inc.** **All rights reserved.**

No part of this publication may be reproduced by any mechanical, photographic, or electronic process, or in the form of a phonographic recording, nor may it be stored in a retrieval system, transmitted, or otherwise copied for public or private use, without permission from the publisher.

The Millipede™ game play, all graphic designs, this technical manual, its accompanying schematic diagrams, and the display manual are protected by the U.S. Copyright Act of 1976.

This Act provides for increased penalties for violating federal copyright laws. Courts ***can impound*** infringing articles while legal action is pending. If infringers are convicted, courts can ***order destruction*** of the infringing articles.

In addition, the Act provides for payment of statutory damages of up to $50,000 in certain cases. Infringers may also have to pay costs and attorneys' fees, fines up to $25,000, and face an imprisonment of up to one year.

Atari will aggressively enforce its copyrights against any infringers. ***We will use all legal means*** to immediately halt any manufacture, distribution, or operation of a copy of video games made by us. Anyone who purchases such copies risks forfeiting such a game.

Published by:
ATARI, INC.
790 Sycamore Drive
P.O. Box 906
Milpitas, California 95035

Lithographed in the U.S.A. **10L**

Notice Regarding Non-ATARI Parts

WARNING

Use of non-ATARI parts or modifications of your ATARI® game circuitry may adversely affect the safety of your game, and may cause injury to you and your players.

You may void the game warranty (printed on the inside back cover of this manual) if you do any of the following:

- substitute non-ATARI parts in the game
- modify or alter any circuits in the game by using kits or parts *not* supplied by Atari.



to licensed communications services is not permitted by the Federal Communications Commission (FCC).

If you suspect interference from an ATARI® game at your location, check the following:

- all green ground wires in the game are properly connected as shown in the the game wiring diagram
- the power cord is properly plugged into a **grounded** 3-wire outlet
- the game PCB is properly installed within the Electromagnetic Interference (EMI) cage
- the EMI Shield PCB is properly installed and in series with the game PCB harness.

Refer to Figure 3-13 to make sure that the game PCB and the Shield PCB are correctly installed.

If you are still unable to solve the interference problem, please contact ATARI Customer Service. See the inside front cover for service in your area.

Table of Contents

1 Set-Up Procedures

A. New Features 1-3
B. Inspecting the Game 1-3
C. Space and Power Requirements 1-3
   1. Installation Requirements 1-4
   2. Selecting the Voltage Plug 1-4
D. Locating the Switches 1-4
   1. On/Off Switch 1-4
   2. Utility Panel Switches 1-4
   3. Option Switches 1-4
E. Setting the Option Switches 1-5
F. Performing the Initial Self-Test 1-7
G. Game Play 1-8
   1. Demonstration Mode 1-8
   2. Attract Mode 1-8
   3. Select Mode 1-9
   4. Play Mode 1-9
   5. High-Score Mode 1-10
   6. Hints for Game Play 1-10

2 Self-Test Procedure

A. Comments on Troubleshooting 2-2
B. Performing the Self-Test 2-2

3 Maintenance, Repair, and Parts

A. Cabinet-Mounted Assemblies 3-2
B. Control Panel 3-6
C. Fluorescent Tube, Speaker and Attraction Panel 3-11
D. Video Display 3-15
E. Utility Panel 3-18
F. Coin Door 3-19
G. Printed-Circuit Boards 3-22
H. Power Supply Assembly 3-33

List of Illustrations

Figure 1-1	Game Overview, Upright Cabinet	1-2
Figure 1-2	Location of Game Switches	1-4
Figure 1-3	Self-Test Display	1-7
Figure 2-1	Self-Test Screen 1—Test Passes	2-2
Figure 2-2	Self-Test Screen 1—Test Fails	2-3
Figure 2-3	Self-Test Screen 2	2-4
Figure 2-4	Self-Test Screen 3	2-4
	Illustrated Parts Lists	
Figure 3-1	Cabinet-Mounted Assemblies, Upright Cabinet	3-2
Figure 3-2	Cabinet-Mounted Assemblies, Ireland-Built Cabinet	3-4
Figure 3-3	Control Panel	3-6
Figure 3-4	Control Panel Assembly	3-7
Figure 3-5	Midi-Trak-Ball™ Assembly	3-9
Figure 3-6	Fluorescent Tube and Attraction Panel, Upright Cabinet	3-11
Figure 3-7	Removing the Speaker, Upright Cabinet	3-12
Figure 3-8	Fluorescent Tube, Speaker, and Attraction Panel, Ireland-Built Cabinet	3-13
Figure 3-9	Video Display, Upright Cabinet	3-15
Figure 3-10	Video Display, Ireland-Built Cabinet	3-16
Figure 3-11	Utility Panel Assembly	3-18
Figure 3-12	Vertically Mounted Coin Door	3-19
Figure 3-13	Removing the Printed-Circuit Boards	3-22
Figure 3-14	Millipede™ Game Printed-Circuit Board Assembly	3-24
Figure 3-15	Regulator/Audio II Printed-Circuit Board Assembly	3-30
Figure 3-16	Power Supply Assembly	3-33

List of Tables

Table 1-1	Switch Settings for Price Options	1-5
Table 1-2	Switch Settings for Play Options	1-6
Table 1-3	Switch Settings for Special Options	1-6
Table 1-4	Self-Test Procedure	1-8
Table 1-5	Millipede™ Scoring	1-10
Table 2-1	Locating the Failed RAM	2-3
Table 2-2	Locating the Failed ROM	2-3

NOTICE

This equipment generates, uses, and can radiate radio frequency energy and if not installed and used in accordance with the instruction manual, may cause interference to radio communications. It has been tested and found to comply with the limits for a Class A computing device pursuant to Subpart J of Part 15 of FCC Rules, which are designed to provide reasonable protection against such interference when operated in a commercial environment. Operation of this equipment in a residential area is likely to cause interference in which case the user, at his own expense, will be required to take whatever measures may be required to correct the interference.

Set-Up Procedures



How to Use this Manual

This manual, written for game operators and service technicians, describes the Millipede™ game. The manual contains information about the *Upright* and *Ireland-Built* Millipede™ cabinets.

Whenever information is unique to the *Upright* cabinet, this symbol appears: 1

Whenever information is unique to the *Ireland-Built* cabinet, this symbol appears: ♣

Chapter 1 describes new features, game setup, settings of option switches, self-test procedures, and game play.

Chapter 2 contains self-test procedures.

Chapter 3 details maintenance, repair, and parts information.

In addition, schematic diagrams of the game circuitry are included with this manual.

Figures 1-1 and 3-1 illustrate the game cabinet. Italicized lettering on these figures refers you to other places in the manual for information about specific cabinet parts.

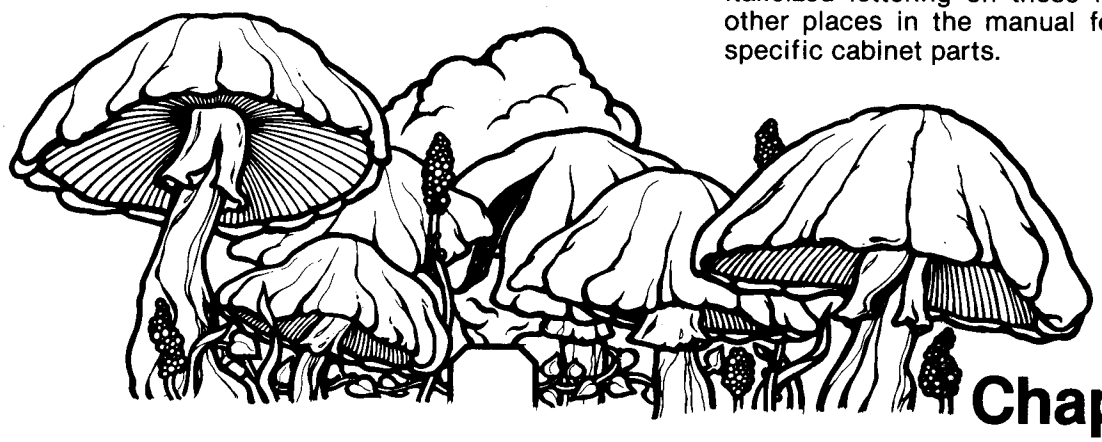

Chapter 1

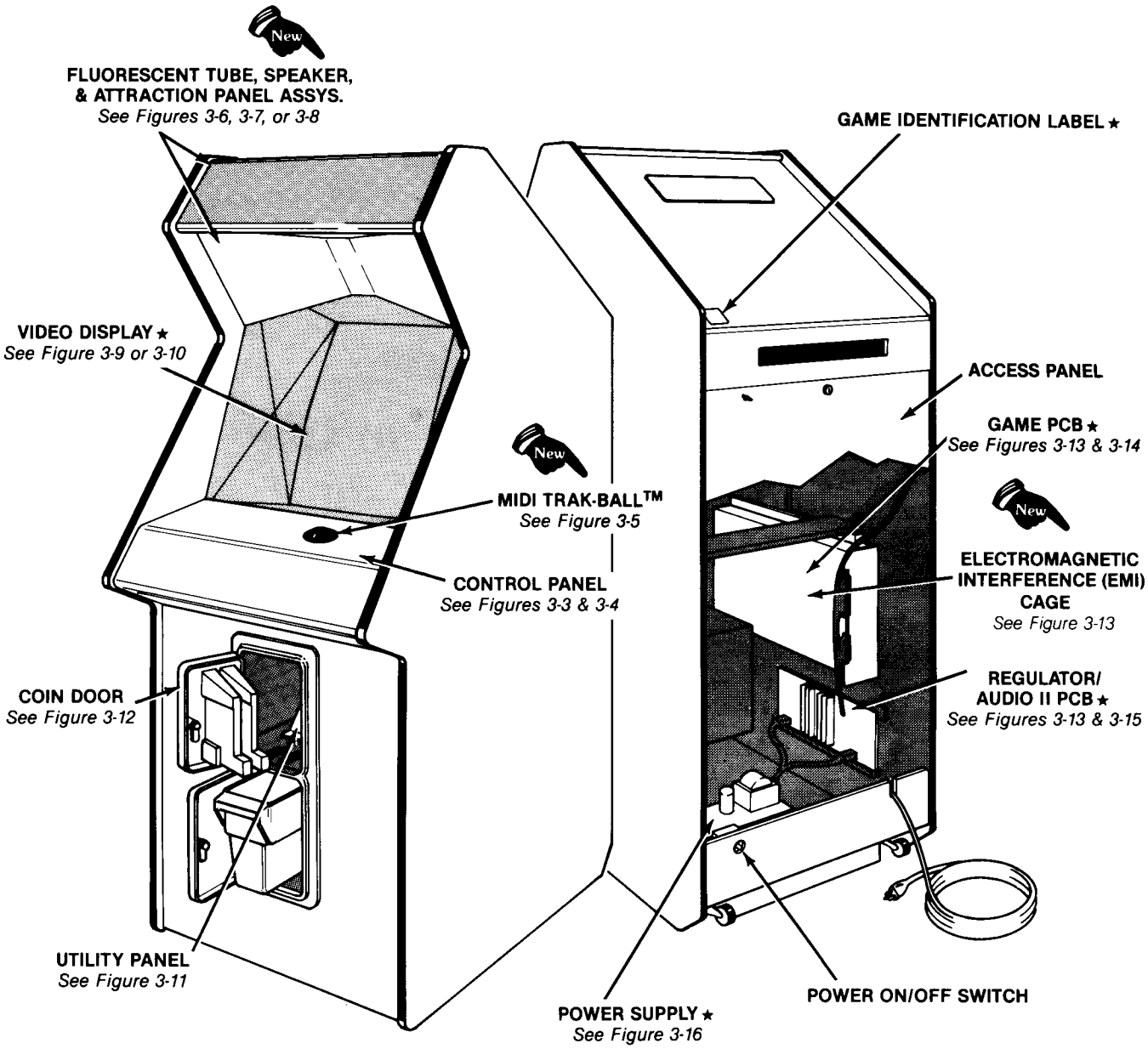

WARNING

SHOCK HAZARD

Connect this game only to a grounded 3-wire outlet. If you have only a 2-wire outlet, we recommend you hire a licensed electrician to install a grounded outlet. **Players may receive an electric shock** if this game is not properly grounded!

★ *Item with a serial number label*

Figure 1-1 Game Overview
Upright Cabinet

A. New Features

The Millipede™ game has four new features. Even if you are familiar with ATARI® games, you should note these important differences:

1. **Midi Trak-Ball™.** The popular Trak-Ball™ assembly has been enlarged and simplified. The housing for this new control is a molded plastic frame with two parts. Smooth action of the Midi Trak-Ball™ improves player accuracy.
2. **Molded Coin Box.** This game has a lightweight, one-piece molded-plastic coin box with handles on both ends for easy carrying.
3. **Dual Speaker Assembly—Upright Cabinet.** The two eight-ohm speakers are positioned so that the game audio envelops the player.
4. **Electromagnetic Interference (EMI) Cage—Upright Cabinet.** Starting on December 1, 1982, the game PCB will be mounted inside this cage, thus reducing electromagnetic interference to television and radio receivers.

New features and all other major parts of the game are illustrated in Figure 1-1. Throughout this manual, wherever one of these new features is mentioned, you will see this symbol: 

B. Inspecting the Game

Please inspect your game carefully to ensure that it was delivered to you in good condition.

WARNING

To avoid electrical shock, do not plug in the game until the procedures in Sections B and C have been completed!

1. Examine the exterior of the game cabinet for dents, chips, or broken parts.
2. Remove the screws that were used as extra security to seal the rear access panel. Unlock and open this panel and the coin door; inspect the interior of the game as follows:
   a. Ensure that all plug-in connectors (on the game harness) are firmly plugged in. Replug any connectors found unplugged. **Do not force connectors together.** The connectors are keyed so they only fit in the proper orientation. **A reversed edge connector may damage a PCB** and will void your warranty.
   b. Ensure that all plug-in integrated circuits on the PCB are firmly plugged into their sockets.
   c. Remove the tie-wrap that secures the coiled power cord inside the cabinet. Inspect the power cord for any cuts or dents in the insulation. Repair or replace it as required. Place the square black plastic strain-relief plate in the wood slot at the bottom of the rear panel opening.
   d. Note the game serial number. It is printed on a label on the back of the cabinet. Verify that the same serial number is also on the Millipede™ game PCB, Regulator/Audio II PCB, power supply, and video display. See *Figure 1-1* for locations of the serial-numbered components. Please mention this serial number whenever you call your distributor for service.
   e. Inspect major subassemblies, such as the power supply, control panel, and video display. Make sure that they are mounted securely.

WARNING

To avoid electrical shock, do not touch internal parts of the display with your hands or with metal objects held in your hands!

C. Space and Power Requirements

WARNING

SHOCK HAZARD

This game should only be connected to a grounded 3-wire outlet. If you have only a 2-wire outlet, we recommend you hire a licensed electrician to install a grounded outlet. *Players may receive an electric shock* if this game is not properly grounded!

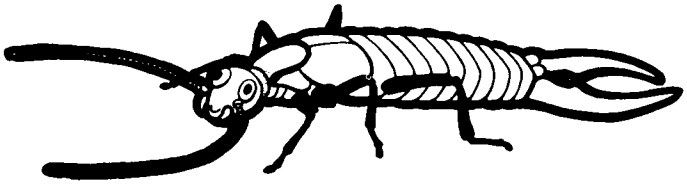

1. Installation Requirements

Power	150 W
Temperature	0 to 38°C (32 to 100°F)
Humidity	Not over 95% relative
Upright Cabinet	
Space Required	62 x 85 cm (25 ½ x 33 ¾ in.)
Game Height	186 cm (73 in.)
Ireland-Built Cabinet	
Space Required	60 x 68 cm (24 x 27 in.)
Game Height	170 cm (67 in.)

2. Selecting the Voltage Plug

The power supply used in this game operates on the line voltage of almost any country in the world. The power supply comes with either one, two, or three separate voltage-selection plugs. Plug voltages and wire colors are 100 VAC (violet wire color), 120 VAC (yellow wire color), 220 VAC (blue wire color), and 240 VAC (brown wire color).

Before plugging in your game, check your line voltage. Next, check the wire color on the voltage selection plug that is plugged into your power supply. Make sure the voltage selection plug is correct for the voltage of your location (see *Figure 3-16*). Now, plug the game into a grounded 3-wire outlet.

D. Locating the Switches

1. On/Off Switch

The power on/off switch is located on the back of the cabinet on the lower left side (see *Figure 1-2*).

2. Utility Panel Switches

The volume control, self-test switch, coin counter(s), and auxiliary coin switch are located on the utility panel (inside the upper coin door). Refer to *Figure 1-2*. Use the volume control to adjust game audio. Use the self-test switch to place the game in the Self-Test Mode. Use the coin switch to credit the game without activating a coin counter.

3. Option Switches

Option switches are located on the game PCB (see *Figure 1-2*).

- Price options are at PCB location B5.
- Play options are at PCB location D5.
- Special options are at PCB location P8.

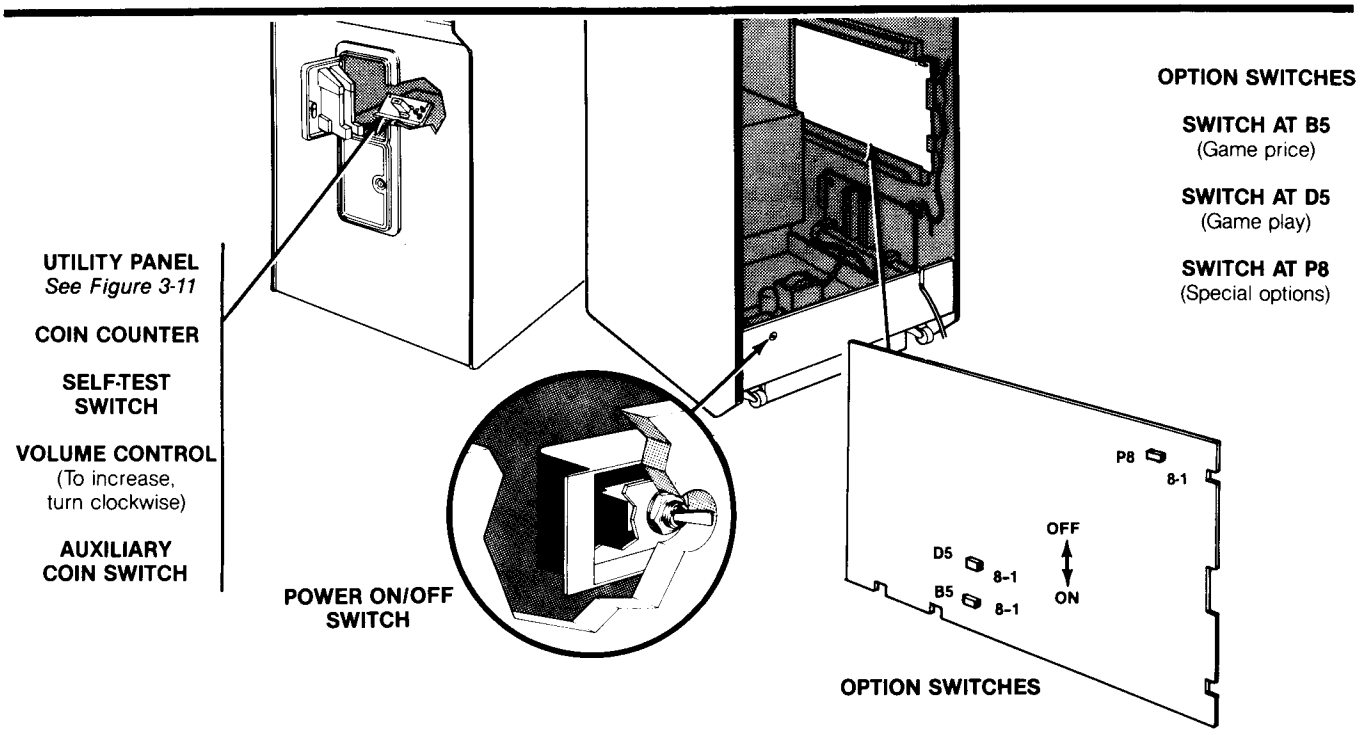

Figure 1-2 Location of Game Switches

E. Setting the Option Switches

Tables 1-1, 1-2, and 1-3 contain settings of the game option switches. Options preset at the factory are shown by the ◄ symbols. However, you may change the settings according to your individual needs.

To verify option switch settings, set the self-test switch to the ***on*** position. Compare the information on the screen to the option switch settings listed in the Table 1, Table 2, and Table 3. Then set the self-test switch to the ***off*** position.

Table 1-1 describes the switch settings for options relating to game price, coin mechanism multipliers, and bonus play. These switches are on the game PCB at location B5.

The *multipliers* (switches 3-5) determine the value of the coin mechanisms to the game's logic. A *coin mechanism* is a device on the inside of the coin door that inspects the coin to determine if the correct coin has been inserted. After this inspection, the mechanism either accepts or rejects the coin. The coin door has two mechanisms.

The basic unit of measurement is a coin worth $.25 or 1 DM, which equals a multiplier of x1. For example, if you have a 2 DM/1 DM coin door, you may want to set the left multiplier at x2 and the right multiplier at x1.

You may offer *bonus play* for certain combinations of coins inserted. For example, with the game set at $.25 per play, players who deposit four successive $.25 coins before pressing the start switch can receive a bonus play. The bonus feature encourages players to insert more money than the minimum $.25 required for one game.

Table 1-1 Switch Settings for Price Options

Settings of 8-Toggle Switch on Millipede™ PCB *(at B5)*								
8	7	6	5	4	3	2	1	Option
On	On					Off	Off	Demonstration Mode
On	Off	On						For every 3 coins inserted, logic adds 1 more coin
On	Off	Off						For every 5 coins inserted, logic adds 1 more coin
Off	On	On						For every 4 coins inserted, logic adds 2 more coins
Off	On	Off						For every 4 coins inserted, logic adds 1 more coin
Off	Off	On						For every 2 coins inserted, logic adds 1 more coin
Off	Off	Off						No Bonus Coins ◄
			Off					Left coin mechanism x 1 ◄
			On					Left coin mechanism x 2
				Off	Off			Right coin mechanism x 1 ◄
				Off	On			Right coin mechanism x 4
				On	Off			Right coin mechanism x 5
				On	On			Right coin mechanism x 6
						On	On	2 coins for 1 credit
						On	Off	1 coin for 1 credit ◄
						Off	On	1 coin for 2 credits
						Off	Off	Free Play

◄*Manufacturer's recommended settings*

Table 1-2 details switch settings for Select Mode, game difficulty, number of lives, and bonus life options. The switches are on the game PCB at location D5.

The Select Mode (switch 8 at location D5 is *off*) allows a player to start a game immediately after finishing a game at an advanced level of play. He receives bonus points for successfully completing play at that level. The maximum level that the player may select will be the bonus level below the last level achieved. For example, if the player scores 46,000 points, and the bonus life setting is at 15,000 (switch 5 is *on* and switch 6 is *off*), his last bonus was at 45,000. Therefore, he may select a starting score of 0, 15,000, or 30,000 points.

In the easy **spider** setting (switch 7 is *off*), the spider moves slowly for the first 10,000 points. In the hard spider setting (switch 7 is *on*) the spider moves slowly for the first 5,000 points. After the point value is reached, the spider moves rapidly.

In the easy **beetle** setting (switch 2 is *off*), the beetle moves slowly until 400,000 points, and four beetles appear in each wave after 500,000 points. In the hard beetle setting (switch 2 is *on*), the beetle moves slowly until 300,000 points, and four beetles appear in each wave after 350,000 points.

In the easy **millipede head** setting (switch 1 is *off*), millipede heads enter from the sides of the screen at timed intervals. In the hard millipede head setting (switch 1 is *on*), millipede heads enter from the sides of the screen faster than in the easy setting.

Table 1-2 Switch Settings for Play Options

Settings of 8-Toggle Switch on Millipede™ PCB *(at D5)*								
8	7	6	5	4	3	2	1	Option
Off								Select Mode ◄
On								No Select Mode
	Off							Easy spider ◄
	On							Hard spider
		Off	Off					Bonus life every 12,000 points
		Off	On					Bonus life every 15,000 points ◄
		On	Off					Bonus life every 20,000 points
		On	On					No bonus life
				Off	Off			2 lives per game
				Off	On			3 lives per game ◄
				On	Off			4 lives per game
				On	On			5 lives per game
						Off		Easy beetle ◄
						On		Hard beetle
							Off	Easy millipede head ◄
							On	Hard millipede head

◄*Manufacturer's recommended settings*

Table 1-3 details option settings for coin counters, minimum credits, Select Mode starting scores, and language. The switches are on the game PCB at location P8.

You may choose the Select Mode starting score with switches 3 and 4. Make sure to enable the Select Mode by setting switch 8 at PCB location D5 to is *off*. The starting scores you may choose are 0, the amount of the bonus life setting, or multiples of the bonus. For example, with the bonus life setting at 15,000 points and the Select Mode starting score at 3 x bonus life level, the player may choose a starting score of 0, 15,000, 30,000 and 45,000 points.

Table 1-3 Switch Settings for Special Options

Settings of 8-Toggle Switch on Millipede™ PCB *(at P8)*								
8	7	6	5	4	3	2	1	Option
On								1 coin counter
Off								2 coin counters
	On							1 credit minimum ◄
	Off							2 credit minimum
								Select Mode Starting Score
		Not used	*Not used*	On	On			0 points
				On	Off			0 and bonus life level
				Off	On			0, bonus life level, and 2 x bonus life level ◄
				Off	Off			0, bonus life level, and 2 x bonus life level, and 3 x bonus life level
						On	On	English ◄
						On	Off	German
						Off	On	French
						Off	Off	Spanish

◄*Manufacturer's recommended settings*

F. Performing the Initial Self-Test

This game will test itself and provide data to show that the game's circuitry and controls are operating properly. The data is provided on the video display and speaker. No additional equipment is necessary.

We suggest you perform the self-test procedure when you first set up the game, any time you collect money from the game, when you change game options, or when you suspect game failure.

Wait at least 10 seconds after playing a game before switching to the Self-Test Mode. Otherwise, you may erase the top three scores in the high-score table or distort the statistics. All credits will be cancelled when you switch to self-test.

Refer to *Figure 1-2* to locate the self-test switch and option switches. Set the self-test switch to the *on* position (see *Figure 1-3*) to see the Self-Test Display in the Self-Test Mode. To end the Self-Test Mode, set the self-test switch to the *off* position.

The complete self-test procedure is explained in *Chapter 2, B. Self-Test Procedure*. If a part of the test described in Table 1-4 fails, refer to Chapter 2.

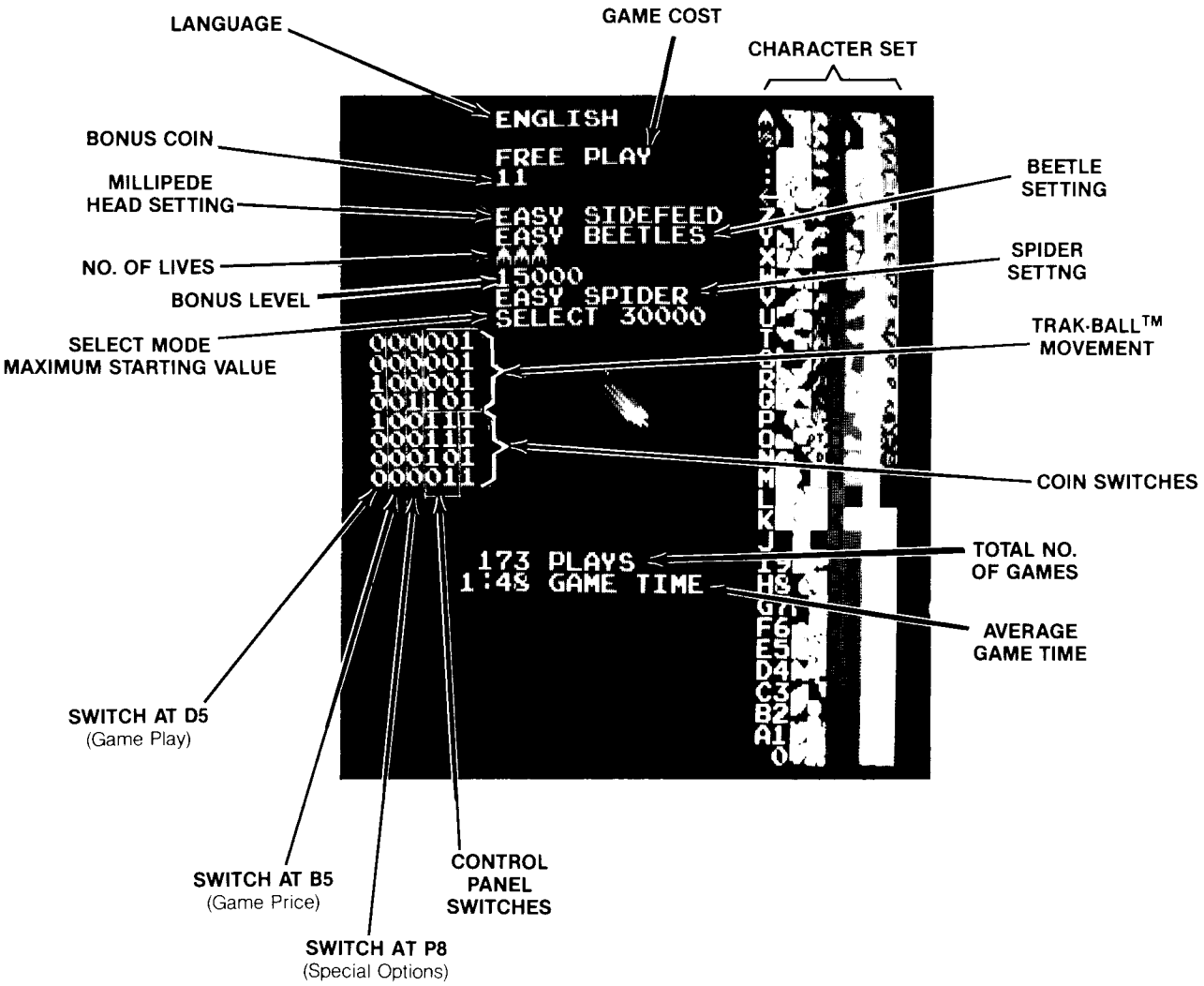

Figure 1-3 Self-Test Display

Table 1-4 Self-Test Procedure

Instruction	Test Passes
1. Set the self-test switch to *on* (see *Figure 1-2*). All credits will be cancelled.	The self-test display appears. RAMs and ROMs are tested. The start LEDs remain on during the test. If the screen is different from the self-test display, or if there are sounds, refer to *Chapter 2, Self-Test Procedure.*
2. Press each control panel and auxiliary coin switches. Insert coins into both coin slots (coins will not be counted on the coin counter).	When you press a switch, the appropriate 1 changes to 0 on the screen and you will hear a high tone. If the test fails refer to *Chapter 2.*
3. Roll the Midi Trak-Ball.™	A motion object picture moves around on the screen in directions corresponding to the Midi Trak-Ball.™ If the test fails, refer to *Chapter 2.*
4. Press the 1-player start switch at least 64 times.	Each time you press the 1-player start switch, the motion object changes shape. If test fails refer to *Chapter 2.*
5. Press the 1-player start switch eight times.	You will hear a high tone each time you press the 1-player start switch. If the test fails refer to *Chapter 2.*
6. Observe 16 blocks of color in the character set on right side of the screen.	Each of the 16 block should contain a different color. If test fails refer to *Chapter 2.*
7. Press and hold the 2-player start switch and press the FIRE switch.	Playfield objects change color with each press of the FIRE switch. If test fails refer to *Chapter 2.*
8. Roll the Midi Trak-Ball™ and press 2-player start switch 16 times.	Each time you roll the Midi Trak Ball™ and press 2-player start switch a motion object is moved from the diagonal group of objects in the center of the screen and placed in a new location on the screen. Test for 16 motion objects in this manner. If test fails refer to *Chapter 2.*
9. To **erase the EAROM** (erases the high-score table and game statistics), simultaneously press both start switches and FIRE.	The message *EA FF* appears in the upper left corner of the screen. The message remains on the self-test screen until the next game is completed.
10. To end the test, set the self-test switch to *off.*	

G. Game Play

Millipede™ is a one- or two-player game with a color raster-scan video display. The game action takes place on a playfield filled with mushrooms, flowers, and deadly DDT bombs. The player tries to destroy a variety of insects that drop from the top of the screen or enter from the sides of the screen. The object of the game is to shoot and destroy as many objects as possible for a high point score.

Player controls consist of a Midi Trak-Ball™ and a FIRE pushbutton. The Midi Trak-Ball™ controls a bow-shaped shooter. The shooter moves left, right, up, or down but stays in the bottom fifth of the screen. When the player presses FIRE, the shooter emits an arrow that travels upward. The player may fire one or many arrows (by pressing the FIRE button constantly). But only one arrow will appear on the screen at a time.

A player may start a game at an advanced level of play and receive bonus points for starting play at that level. Refer to *Section 3* and see *Table 1-2* and *Table 1-3* for this option setting.

Millipede™ has six possible modes of operation: Demonstration, Attract, Select, Play, High-Score, and Self-Test. Self-Test is a special mode for checking the game switches and computer functions. You may enter the Self-Test Mode from any other mode. However, all credits will be cancelled.

1. Demonstration Mode

To enter the Demonstration Mode, set switches 1 and 2 *off* and 7 and 8 to *on* at PCB location B5. In this mode all insects are harmless except the spider. Thus, to see all the game action, the player must destroy the spider. To exit this mode, reset the switches to your specifications (see *Table 1-1*).

2. Attract Mode

The Attract Mode begins when you set the power on/off switch to *on*, or after a Play, High-Score Mode, or Self-Test. Two pictures alternate in the Attract Mode. The high-score table is displayed in the center of each screen. The eight highest scores and players' initials appear in this table. One picture displays various messages, the high-score table, and segments of simulated game play showing game characters. The score(s) of the previous player(s) and the highest score for the game are at the top of the screen.

In the middle of the screen are messages relating to the cost of the game, bonus life, and credits (if any). If you select the option of two credits for one play (see *Table 1-1*) and a player inserts one credit, the message *2 CREDIT MINIMUM* flashes on the

screen until the player inserts enough credits for game play. A "credit" is defined as the cost for each player to play one game. The copyright message is at the bottom of the screen.

In the background is the simulated game play of a moderately skilled player. The player's shooter moves in the bottom fifth of the screen, shooting and destroying mushrooms and various insect characters. Periodically the shooter is destroyed when an insect hits the shooter.

The other picture in the Attract Mode has ten boxes, each containing a different insect target. In addition, a field of mushrooms appears in one box, and the shooter destroying DDT bombs appears in another box.

When enough credit(s) is inserted for a 1- or 2-player game, the appropriate 1- or 2-player LED flashes. When the player presses the flashing LED start button, the Select Mode begins.

3. Select Mode

This mode begins when an LED start button is pressed. The Select Mode allows a player to start a game at an advanced level of play and to receive bonus points for starting play at that level. (See *Table 1-2* and *Table 1-3* for option switch settings for this mode.) For example, if the bonus setting is at 20,000 points, the player may start with 0, 20,000, 40,000, or 60,000 points. If the bonus setting is at 15,000 points, the player may start with 0, 15,000, 30,000, or 45,000 points.

After playing a game, a player has 30 seconds to start the next game at a higher level. The maximum level which the player may select will be the bonus level below the last level achieved. For example, if the player scores 56,000 points, and bonus setting is at 15,000, his last bonus was at 45,000. Therefore, he may select a starting score of 0, 15,000 or 30,000. The bonus level will never be more than 300,000 points.

In the Select Mode the player has 10 seconds to select the bonus level. *TIME* on the screen decreases from *9*. The previous game score(s) and high-score are at the top of the screen. Instructions on the screen tell the player to select a starting score. Below the instructions are up to four starting scores, depending on the select mode starting values (see *Table 1-3*). The player rolls the Midi Trak-Ball™ to the right or left to increase or decrease the score and find his starting score. Then he presses FIRE to complete his selection. At the bottom of the screen is a message showing the next bonus level.

4. Play Mode

The Play Mode begins when the Select Mode ends. The Play Mode ends when the player's last shooter is destroyed. The player's score(s) and the number of remaining lives are displayed at the top of the screen. The next bonus level is displayed at the bottom of the screen.

Game play begins with a playfield of randomly placed mushrooms and DDT bombs. A millipede enters at the top center of the screen and starts snaking its way across the screen. The millipede changes direction when it runs into a fixed object in the playfield (mushroom, DDT bomb, flower, or another insect), or when it reaches the side boundaries of the playfield.

When a segment of the millipede is shot, it is destroyed and a mushroom appears where that segment was shot. When shot, the millipede breaks into two smaller millipedes, each with its own head. When a millipede reaches the bottom of the screen, it will stay in the bottom fifth of the screen. New millipede heads enter the playfield, thus increasing the difficulty of game play.

If a millipede reaches the bottom of the screen without being shot, it releases its tail. This tail changes into a new head.

A round of play ends when all millipede segments are destroyed. The screen then scrolls down one line. When the millipede with only four segments enters from the top of the screen, the screen will scroll down every two seconds. The only way a player can stop the scrolling screen is to shoot a DDT bomb or destroy the entire millipede. The screen scrolls up when a mosquito is shot.

It takes four shots to destroy a mushroom. After a period of time, the entire playfield of mushrooms changes. Some mushrooms die and new mushrooms grow where there were none before. A mushroom next to a DDT bomb becomes poisoned. When a millipede runs into a poisoned mushroom, two things happen. His head changes color, and he changes direction and falls vertically to the bottom of the screen.

DDT bombs explode when hit by an arrow. Any object near the bomb is engulfed by the explosion. Insects are worth more than normal if they are destroyed by the explosion (see *Table 1-5*).

Spiders appear in any round. They move in a random pattern on the bottom third of the screen. As the player's score increases, the range of the spider decreases, until it is confined to the bottom fifth of the screen. Also, more spiders enter as the game progresses. A spider destroys any mushroom or

flower it moves over. The player earns 300, 600, or 900 points for destroying the spider, depending on the distance the shooter and the spider are from each other. Depending on a special option switch setting, the spider moves slowly until a player reaches a specific score, and then it speeds up (see *Table 1-2*). If the player's shooter and a spider collide, both are destroyed.

When a millipede with fewer than eleven segments appears, an earwig enters the screen. As the player earns more points, the earwig's speed increases. If an earwig passes over a mushroom, it poisons the mushroom. Earwigs are worth 1,000 points when destroyed.

When a millipede with fewer than ten segments appears, a dragonfly enters at the top of the screen. The dragonfly moves in a zig-zag pattern and its speed increases as the player's score increases. As the dragonfly moves, it leaves a trail of mushrooms behind. Dragonflies are worth 500 points when destroyed.

When a millipede with fewer than nine segments appears, a mosquito enters at the top of the screen and flies in a diagonal pattern. The mosquito's speed increases as the player's score increases. Mosquitos are worth 400 points when destroyed.

Beetles appear randomly after the first round. They enter from the sides of the screen near the bottom, travel down to the bottom of the screen, and walk at least half way across the bottom. Then the beetle travels up and exits at the side of the screen. If a beetle passes over a mushroom, the mushroom changes into a flower. Flowers cannot be destroyed by the beetle. Depending on an option switch setting (see *Table 1-2*), the number of beetles appearing on the screen and the speed of the beetles increase as the player's score increases. When a beetle is destroyed, the screen scrolls down one row. Beetles are worth 300 points.

Bees may fall from the top of the screen during any round. As the bee falls, it leaves a trail of mushrooms behind. The first time the player shoots a bee, it speeds up. The second shot destroys a bee. Bees have a value of 200 points when destroyed.

An inchworm may appear when a millipede with fewer that eleven segments appears. The inchworm travels from one side of the screen to the other side. It moves slowly until the player's score reaches 80,000 points. Then it speeds up. If the player destroys the inchworm, all insects will slow down for about three and one-half seconds. The inchworm is worth 100 points when destroyed.

After a millipede of one, three, five, seven, or eleven segments has been destroyed, an insect bombing raid occurs. A raid may have only bees, dragonflies, mosquitos, or a mixture of all three. When the insect is shot, a point value appears on the screen in its place. With each additional insect hit, 100 points will be added to the previous value, up to 1000 points.

Table 1-5 Millipede Scoring

Object	Points
Spider	300, 600, 900, 1200
Earwig	1000
DDT Bomb	800
Dragonfly	500
Mosquito	400
Beetle	300
Bee	200
Inchworm	100
Millipede Head	100
Milipede Body	10
Mushroom	1

5. High-Score Mode

The High-Score Mode begins when a player has earned one of the eight highest scores. The player has two minutes to enter his initials. A player rotates the Midi-Trak-Ball™ left or right to locate his initial. He presses FIRE to select his initials and transfer the initials and score into the high-score table.

To reset the high-score table, switch the game *off* and then *on*, or set the self-test switch *on* and *off* (the latter will not erase the three highest scores.) To erase the three highest scores, refer to Section F in this chapter.

6. Hints for Game Play

- Destroy mushrooms near the bottom of the screen.
- Destroy the DDT bomb when the Millipede is beside it.
- When a millipede hits a poisoned mushroom, it changes direction and falls vertically. Anticipate the place the millipede will fall, because shooting it as it falls destroys all its segments.

Self-Test Procedure

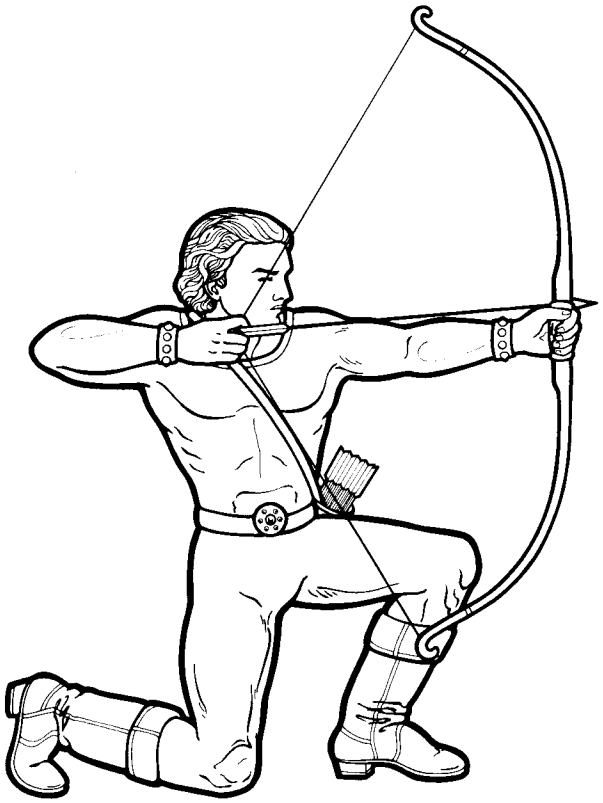

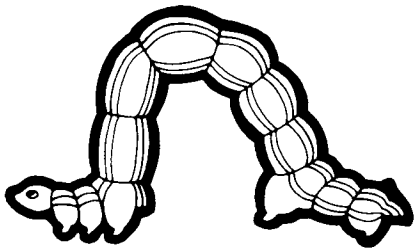

The following self-test procedures should be performed by a qualified electronic technician.

This game tests itself when the self-test switch is set to the *on* position. If there is a failure, the game produces audiovisual aids to help you find the failing portion of the game. The self-test procedure included in Chapter 1 will help you decide if the game is or is not working properly.



Chapter 2

A. Comments on Troubleshooting

When troubleshooting, first determine the symptom(s) of the failure. After determining the symptom, look over the wiring diagram and determine what assemblies could cause the failure. Could it be caused by the power supply, Regulator/Audio II printed-circuit board (PCB), or the video display?

The next step is to check all harness wires and connectors to the suspected assembly. If you find no harness or connector problem, substitute an assembly known to be good for the suspected failing assembly. If the game functions properly, you have successfully isolated the failure. If it doesn't, repeat the procedure with another assembly.

When you have isolated the failing assembly, you must troubleshoot that assembly and make the necessary repairs. If the video display fails, we suggest that a qualified video display technician handle the troubleshooting and repair.

Be sure to refer to *The Book—A Guide to Electronic Game Operation and Servicing*, published by Atari, Inc., whenever you need help with the techniques, tools, and terminology associated with coin-operated electronic games.

To effectively troubleshoot a game PCB, learn as much as you can about the PCB. The diagrams in the *Schematic Package* (included with the game) show the functions of the circuitry. Again, while troubleshooting the PCB, first determine the symptom of the failure, then locate the suspected area on the schematic diagram.

SELF-TEST SCREEN 1—Test Passes:

If the test passes, the screen displays the picture in Figure 2-1—Test Passes. See *Chapter 1, Section F, Performing the Initial Self-Test* for a complete description of this picture. To see self-test screen two, set the self-test switch to *off.* Simultaneously press the self-test switch and the auxiliary coin switch. To see self-test screen three, press the auxiliary coin switch.



Figure 2-1 Self-Test Screen 1—Test Passes

B. Performing the Self-Test

This game will test itself and provide data to show that the game's circuitry and controls are operating properly. The data is provided on the video display and speaker. No additional equipment is necessary.

To switch to the Self-Test Mode, set the self-test switch, located on the utility panel, to the *on* position.

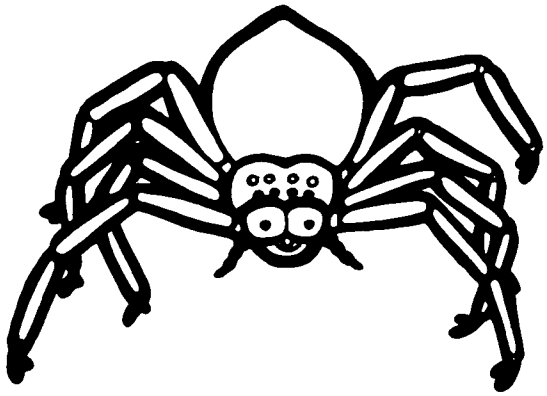

SELF-TEST SCREEN 1—Test Fails:

RAM failure is indicated by a blank or "garbage"-filled screen and a number of tones. Count the tones to determine the failed RAM. The tone number and matching RAM location are shown in Table 2-1. The number of tones continue to repeat.

Replace the failed RAM and restart the test (set the self-test switch to *off,* and then to *on*).

Table 2-1 Locating the Failed RAM

Number of Tones	Failed RAM Location on Game PCB
1	F2
2	E2
3	M2
4	N4
5	L2
6	M4
7	K2
8	L4
9	J2
10	K4

ROM failure is indicated by two groups of alphanumeric characters in the upper left corner of the screen (see *Figure 2-2*). The group at the far left indicates the location of the failed ROM/PROM. Ignore the group at the right of the ROM number. The failed ROM and its location are listed in Table 2-2.

Table 2-2 Location of Failed ROM

Screen Display	Failed ROM Location on Game PCB
R1	M/N1
R2	L1
R3	J/K1
R4	H1
EA	P2
P0	D4
P1	B4

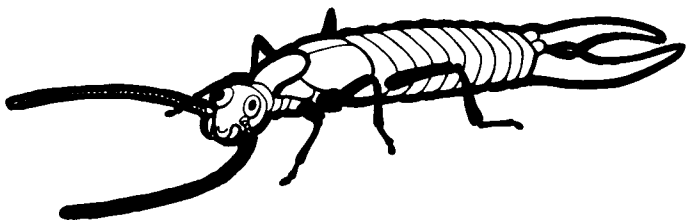



Figure 2-2 Self-Test Screen 1—Test Fails

SWITCH failure is indicated by the appropriate *1* not changing to a *0* on the screen when you press a switch. There may be a constant tone, or no tone at all. Check if the volume control is turned off. Or check the switch, loose harness or connector wires, or the custom audio I/O chip. Troubleshoot using the information in *Chapter 3, Section B,* and the game schematics.

MIDI TRAK-BALL™ failure is indicated by no movement or jerky movement of the player's shooter when you roll the Midi Trak-Ball™. If the cursor fails to move, or if movement is reversed or jerky, suspect the Midi Trak-Ball™ or the harness (see *Figure 3-5*).

SOUND failure is indicated by the absence of any sound when any of the control panel or coin switches are pressed. Press the 1-player start switch 8 times to test all 8 channels. No increase in volume or change in pitch, or no tone when you press and hold the 2-player start switch and press the 1-player start switch, indicates failure. Suspect the volume control on the utility panel, the custom I/O chips, or troubleshoot using the game schematics.

COLOR failure is indicated by no color change in the background or playfield objects. Background color should change when you press the 1-player start switch. Playfield objects should change when you press the 2-player start switch. Troubleshoot using the game schematics and the video display manual.

MOVING OBJECT failure is indicated when the object represented as the shooter does not change shape each time you press the 1-player start switch. Press the 1-player start switch 64 times to see all shapes. Suspect the EPROM may be bad, or troubleshoot using the game schematics.

To see self-test screen two, set the self-test switch to *off*, then simultaneously press the auxiliary coin switch and the self-test switch.

SELF-TEST SCREEN 2:

This screen displays 64 rectangles, each with varying intensities of red and blue (see *Figure 2-3*). The column on the left edge of the screen should show eight shades of blue from black at the bottom to bright blue at the top. The bottom row should show eight shades of red from black at the left to bright red at the right. The remainder of the screen shows blends of red and blue. Adjust the color guns (see the video display manual) so the lower left corner is black and the other corners are bright blue and red.

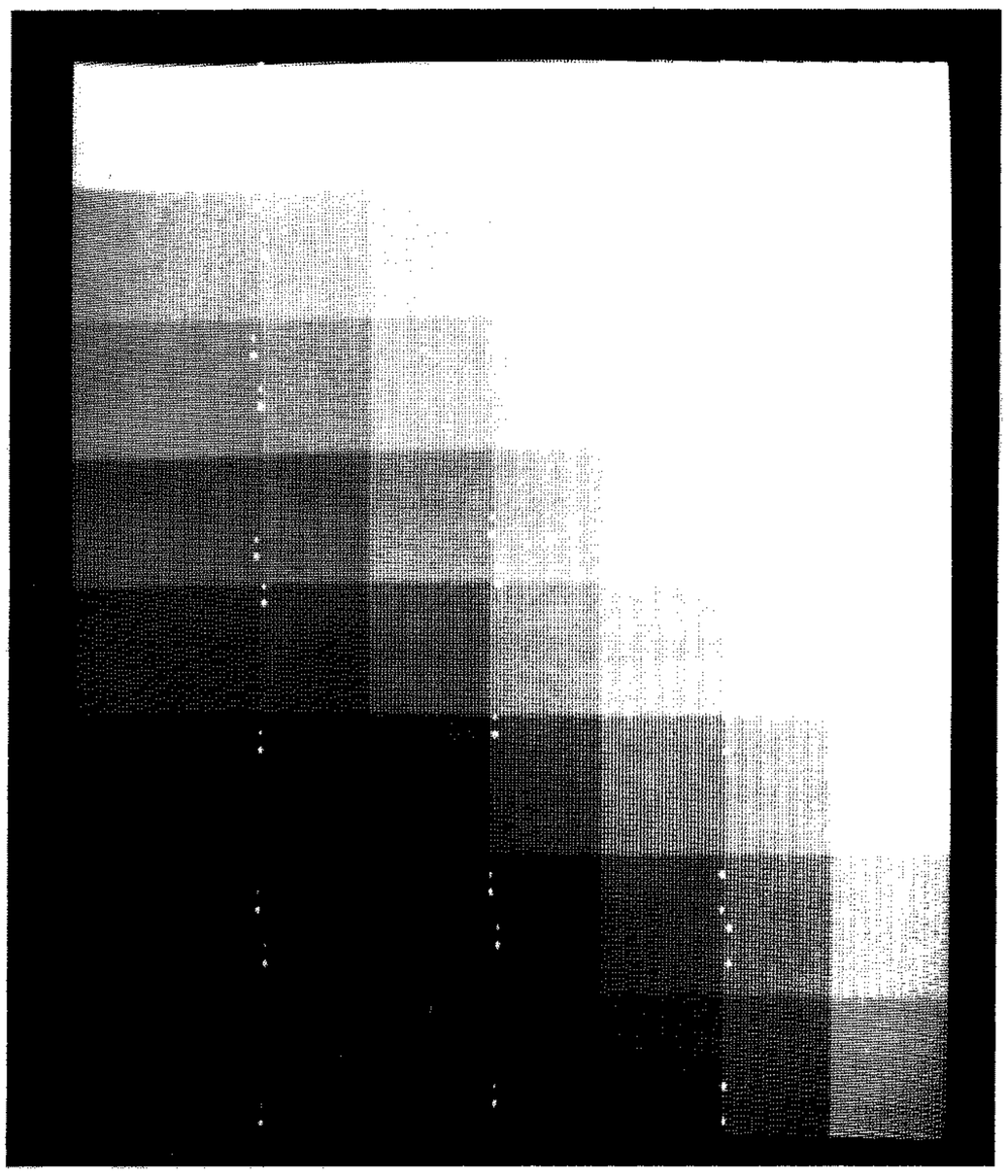

Figure 2-3 Self-Test Screen 2

Press FIRE and the screen displays 64 intensities of green. The lower left corner should be dark green. Press FIRE again, and the green becomes more intense. Press FIRE a third time, and the green becomes even more intense. The upper right corner should now be white.

SELF-TEST SCREEN 3:

Press the auxiliary coin switch and the screen displays a test pattern with white dots on a black background (see *Figure 2-4).* Troubleshoot convergence using to the video display manual.

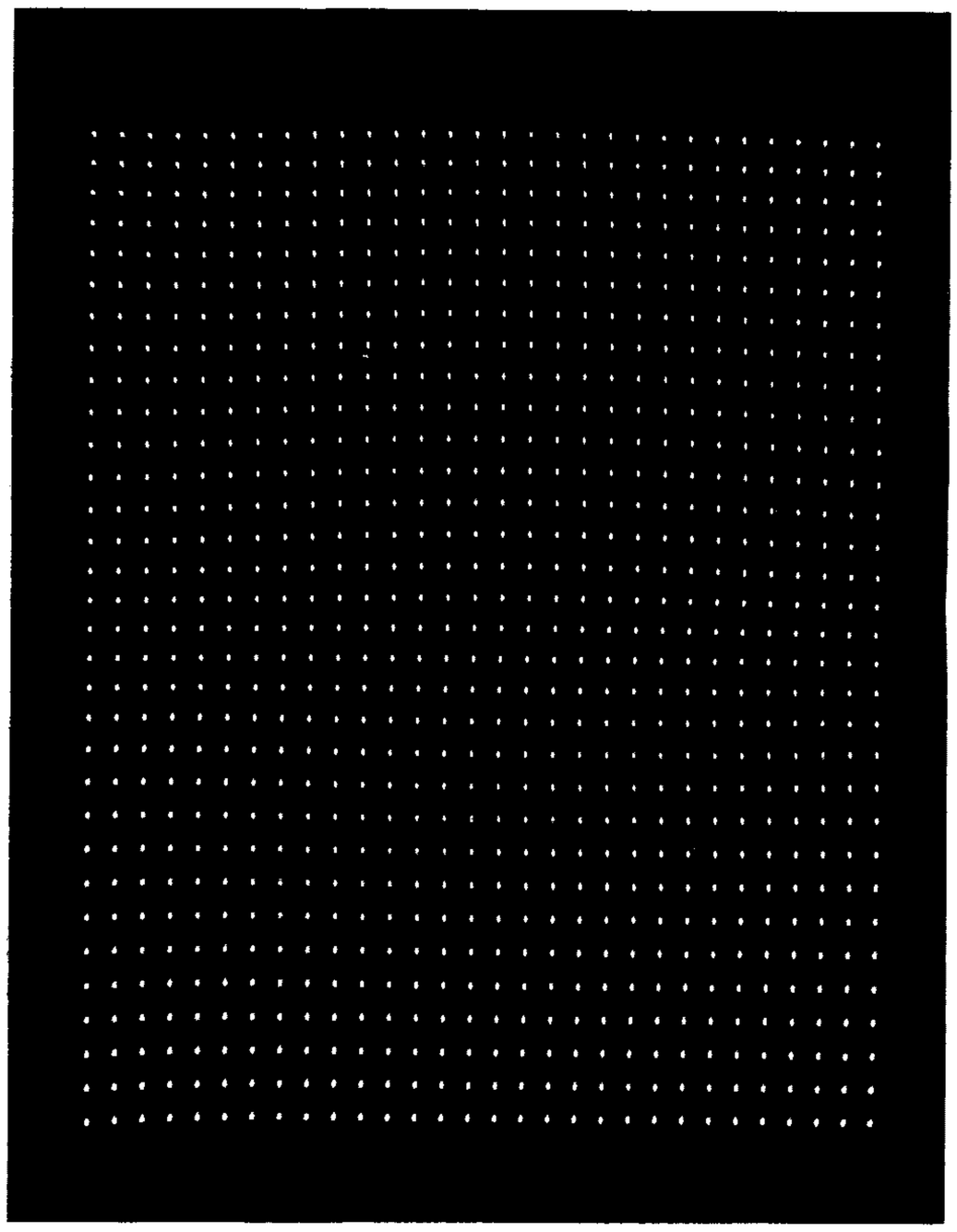

Figure 2-4 Self-Test Screen 3

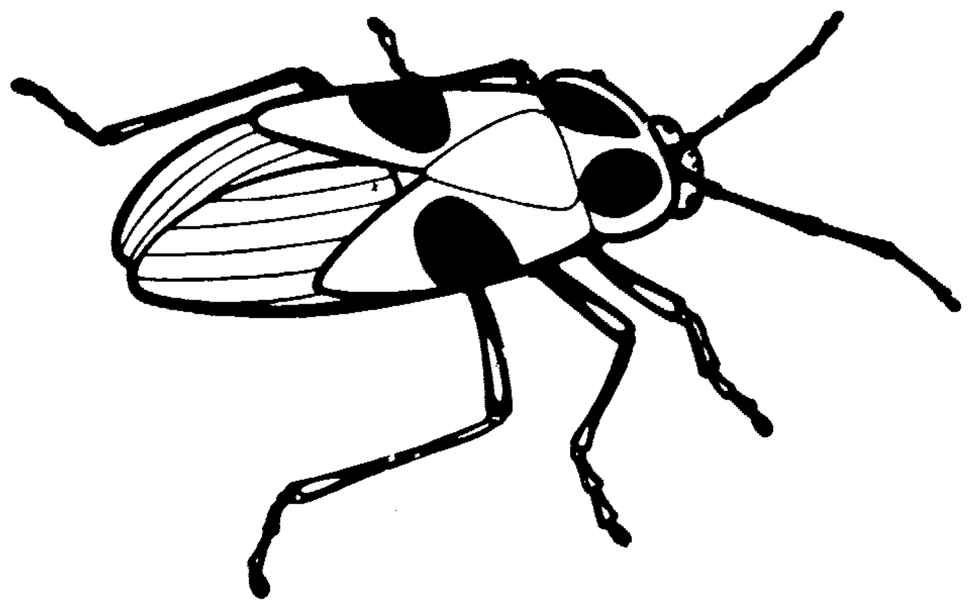

Maintenance, Repair, and Parts



This chapter details maintenance and repair information and provides information you need to order parts for your game. Common hardware (screws, nuts, washers, bolts, etc.) has been deleted from most of the parts lists. However, there is a parts list for the hardware needed to mount the printed circuit boards (PCBs) to the cabinet.

The printed circuit board (PCB) parts lists are arranged in alphabetical order by component. Each component subsection is sorted by reference designator. Other parts lists are arranged alphanumerically by Atari part number. In these parts lists, all A-prefix numbers come first. Following these are numbers in sequence evaluated up to the hyphen, namely 00- through 99-, then 000598-through approximately 201000-.

When ordering parts, please give the part number, part name, number of this manual, and serial number of your game. This will aid in filling your order rapidly and correctly. We hope the results will be less downtime and more profit from your game.

Atari Customer Service numbers are listed on the inside front cover of this manual.

Chapter 3

A. Cabinet-Mounted Assemblies

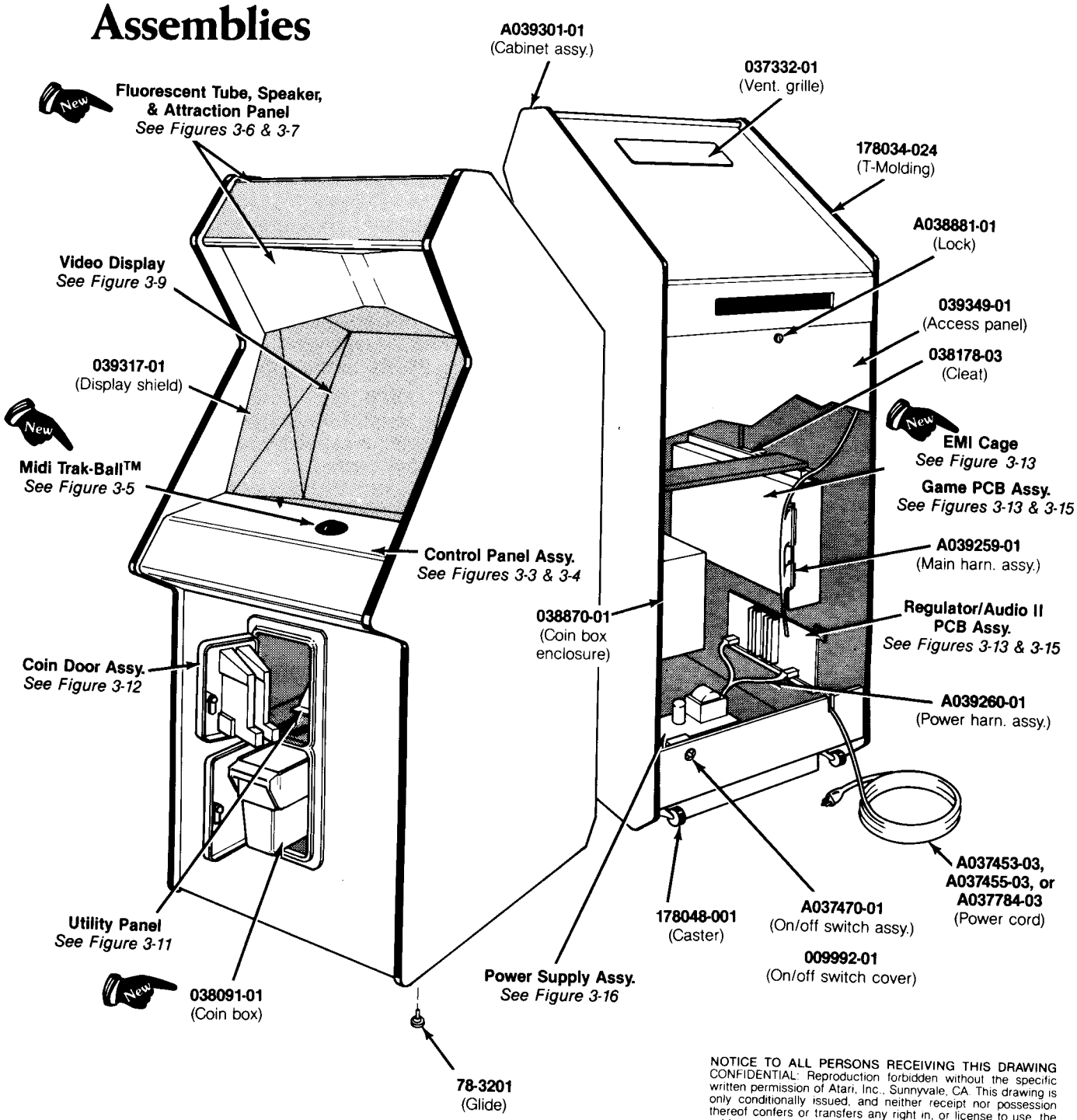

NOTICE TO ALL PERSONS RECEIVING THIS DRAWING CONFIDENTIAL: Reproduction forbidden without the specific written permission of Atari, Inc., Sunnyvale, CA. This drawing is only conditionally issued, and neither receipt nor possession thereof confers or transfers any right in, or license to use, the subject matter of the drawing or any design or technical information shown thereon, nor any right to reproduce this drawing or any part thereof. Except for manufacture by vendors of Atari, Inc., and for manufacture under the corporation's written license, no right to reproduce this drawing is granted or the subject matter thereof unless by written agreement with or written permission from the corporation.

Figure 3-1 Cabinet-Mounted Assemblies
Upright Cabinet A039300-01 A

Cabinet-Mounted Assemblies
Upright Cabinet
Parts List

Assemblies and components in the following parts list are shown in Figure 3-1.

Part No.	*Description*
A037453-03	Strain-Relief Power Cord *(U.S. and Canada)*
A037455-03	Strain-Relief Power Cord *(Australia and New Zealand)*
A037470-01	Power On/Off Switch/Mounting Plate Assembly
A037701-01	EMI Cage Assembly
A037784-03	Strain-Relief Power Cord *(United Kingdom, Ireland, Lebanon, Saudi Arabia, India, Hong Kong, Singapore, Egypt, Nigeria, Republic of South Africa, Zimbabwe)*
A038881-01	Lock Assembly *(for rear access panel) Acceptable substitute is part no. A038881-03*
A039259-01	Main Harness Assembly
A039260-01	Power Harness Assembly
A039301-01	Cabinet Assembly *(includes glides and PCB retainers, but not the rear access panel)*
A039502-01	Electromagnetic Interference (EMI) Shield PCB Assembly
	The following four items are the technical information supplements to this game:
SP-217	Millipede Schematic Package
ST-217-01	Millipede Label with Self-Test Procedure and Option Switch Settings
TM-217	Millipede Operation, Maintenance, and Service Manual
TM-220	Service Manual for 19-Inch Matsushita Color Raster-Scan Display *(use with part no. 139003-1004) Acceptable substitute is TM-160, use with part no. 92-049*
78-6900402	Vinyl Foam Single-Coated Adhesive Tape, ¼-Inch Wide x ⅛-Inch Thick *(not shown)*
78-3201	Adjustable Glide
009992-01	On/Off Switch Cover
037332-01	Ventilation Grille
038091-01	Molded Coin Box
038178-03	Dual-Slotted PCB Cleat
038870-01	Metal Coin Box Enclosure
039317-01	Video Display Shield
039349-01	Rear Access Panel *(does not include lock)*
178013-001	Spring Draw Latch *(not shown)*
178034-024	¾-Inch Black Plastic T-Molding
178048-001	2-Inch Rigid Caster

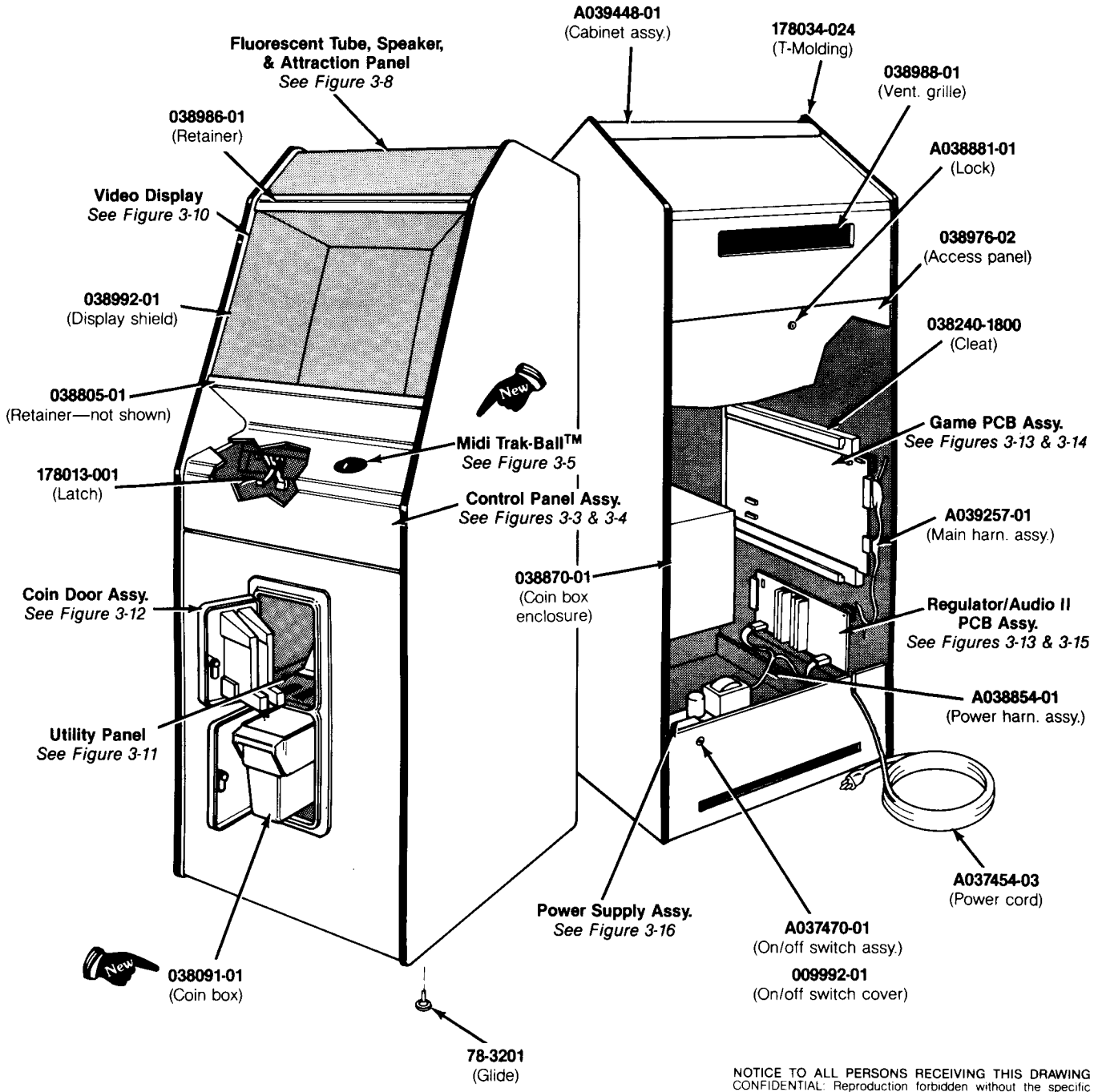

NOTICE TO ALL PERSONS RECEIVING THIS DRAWING CONFIDENTIAL: Reproduction forbidden without the specific written permission of Atari, Inc., Sunnyvale, CA. This drawing is only conditionally issued, and neither receipt nor possession thereof confers or transfers any right in, or license to use, the subject matter of the drawing or any design or technical information shown thereon, nor any right to reproduce this drawing or any part thereof. Except for manufacture by vendors of Atari, Inc., and for manufacture under the corporation's written license, no right to reproduce this drawing is granted or the subject matter thereof unless by written agreement with or written permission from the corporation.

Figure 3-2 Cabinet-Mounted Assemblies
Ireland-Built Cabinet A039440-01 & -02 A

Cabinet-Mounted Assemblies
Ireland-Built Cabinet
Parts List

Assemblies and components in the following parts list are shown in Figure 3-2.

Part No.	*Description*
A037454-03	Strain-Relief Power Cord *(Austria, Belgium, Chile, Denmark, Finland, France, Germany, Greece, Indonesia, Italy, Netherlands, Norway, Spain, Sweden, and Uruguay)*
A037470-01	Power On/Off Switch/Mounting Plate Assembly
A038854-01	Power Harness Assembly
A038881-01	Lock Assembly *(for rear access panel)*
A039257-01	Main Harness Assembly
A039448-01	Cabinet Assembly *(includes glides and PCB retainers, but not the rear access panel)*
	The following four items are the technical information supplements to this game:
SP-217	Millipede Schematic Package
ST-217-01	Millipede Label with Self-Test Procedure and Option Switch Settings
TM-217	Millipede Operation, Maintenance, and Service Manual
TM-220	Service Manual for 19-Inch Matsushita Color Raster-Scan Display *(use with part no. 139003-1004) Acceptable substitute is TM-160, use with part no. 92-049*
78-3201	Adjustable Glide
78-6900402	Vinyl Foam Single-Coated Adhesive Tape, ¼-Inch Wide x ⅛-Inch Thick *(not shown)*
009992-01	On/Off Switch Cover
038091-01 New	Molded Coin Box
038240-1800	Printed Circuit Board Cleat
038770-01	Metal Coin Box Enclosure *Acceptable substitute is part no. 038781-01*
038790-01	Front Video Display Support Bracket *(not shown)*
038805-01	Display Shield Retainer *(not shown)*
038976-02	Rear Access Panel *(does not include lock)*
038986-01	Attraction Panel Retainer
038988-01	Ventilation Grille
038992-01	Display Shield
039009-01	Rear Video Display Support Bracket *(not shown)*
178013-002	Spring Draw Latch
178034-024	¾-Inch Black Plastic T-Molding

B. Control Panel

WARNING

Switch the game to *off* before you remove or repair any switch on the control panel.

Opening the Control Panel:

1. Unlock and open the coin door (see *Figure 3-3*). Reach up through the opening to the top of the control panel and release the spring-draw latches. For the *Ireland-Built* cabinet, remove the two button-head screws that secure the top of the panel to the cabinet.
2. Close the coin door.
3. Lift the control panel at the top edge and tilt it toward you. The control panel on the *Upright* cabinet has foam tape on it. Make sure the tape is in good condition.

Repairing the Leaf Switch:*

1. Adjust the leaf switches for a narrow gap. When a switch button is pressed, the resulting wiping action of the cross-bar contacts provides a self-cleaning feature. **Do not burnish the contacts.** To clean them, use electrical contact cleaner.
2. To remove a leaf switch, disconnect the wires and remove the screw with a Phillips-head screwdriver.
3. To remove the switch button, turn the nut with a wrench in a counterclockwise direction from inside the control panel. The ring on the outside of the control panel should not spin.
4. Replace the switch, reconnect the harness wires as shown in the *Schematic Package, Game Wiring Diagram.* Make sure the colored wires are routed to their matching colored tabs on the switch.

Repairing the LED Start Switches:*

These switches have a very low failure rate. If you suspect switch failure, test it using the following directions.

Testing the LED Switch*:

1. Disconnect the wires from the switch.
2. Attach the leads of an ohmmeter to the normally open and common contacts.
3. Check the contacts (push and release the switch button) for closed and open continuity.
4. If the contacts do not operate sharply or always remain closed or open, replace the switch.

Replacing the LED Switch*:

1. Disconnect the wires from the switch.
2. Turn the switch counterclockwise while holding the black cone-shaped bushing on the outside of the control panel.
3. Install a new switch using the reverse procedure.
4. Reconnect the wires as shown in *Figure 3-3.*

Circled numbers match numbered instructions. Disassemble in the order indicated.

**not shown in illustration*

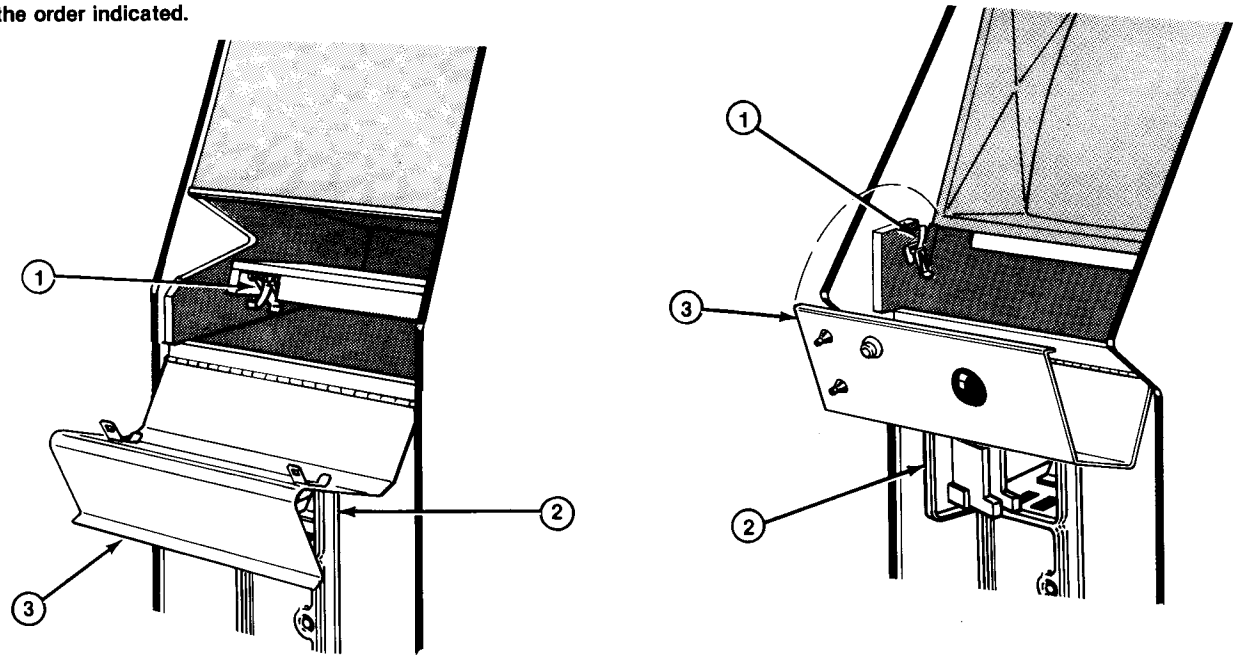

Figure 3-3 Control Panel

⚠ WARNING ⚠

Players may receive an electric shock if this control panel is not properly grounded! After servicing any parts on the panel, make sure that the ground wire is firmly attached to the metal tab on the inside of the control panel.

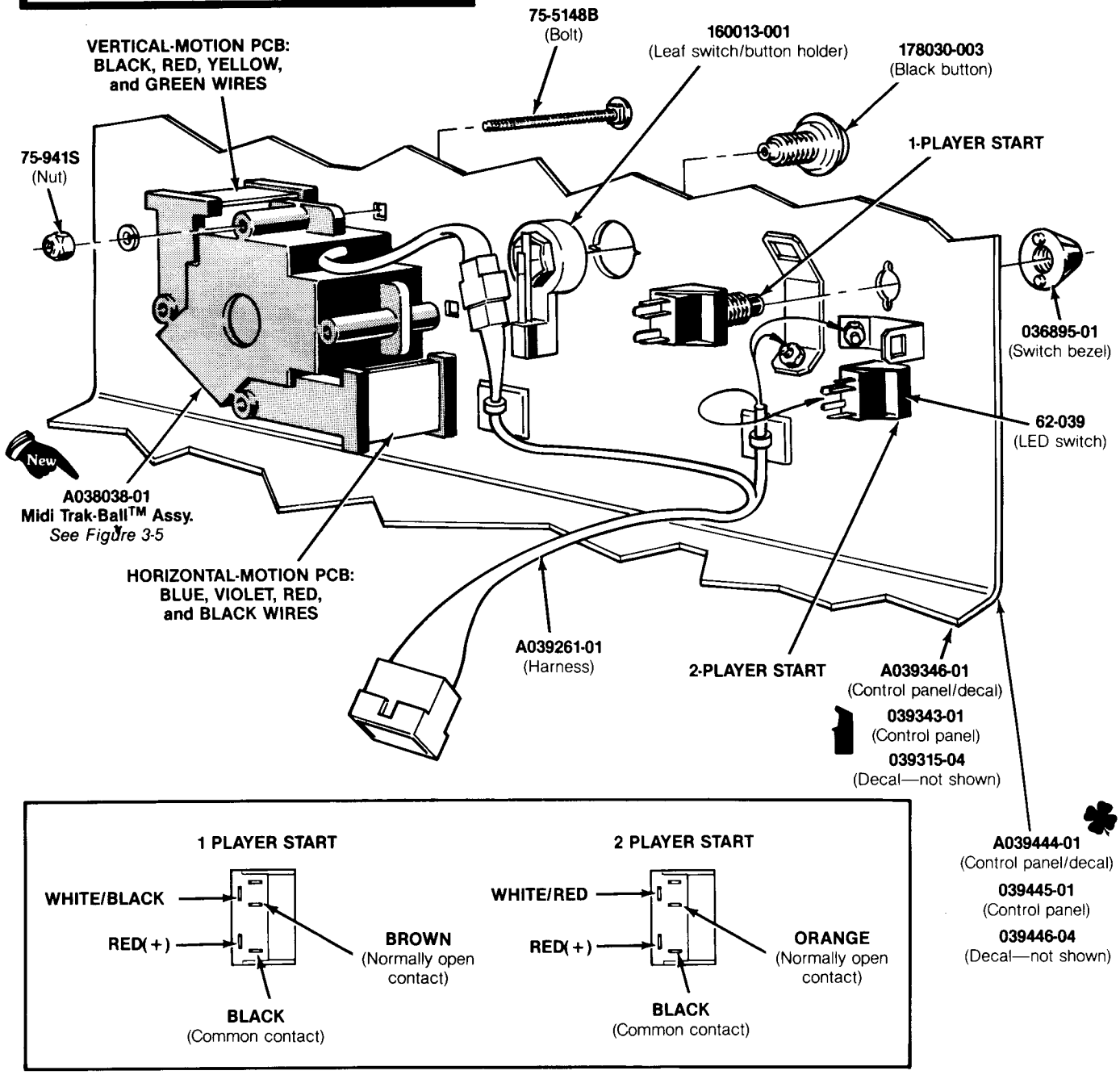

Figure 3-4 Control Panel Assembly
Upright Cabinet A039308-01 A
Ireland-Built Cabinet A039443-01 A

Control Panel Assembly Parts List

Assemblies and components in the following parts list are shown in Figure 3-4.

Part No.	*Description*
	Upright Cabinet
A039346-01	Control Panel with Decal
78-6900402	Vinyl Foam Single-Coated Adhesive Tape, ¼-Inch Wide x ⅛-Inch Thick *(not shown—24 inches required)*
039315-04	Control Panel Decal *(not shown)*
039343-01	Control Panel
	Ireland-Built Cabinet
A039444-01	Control Panel with Decal
039445-01	Control Panel
039446-04	Control Panel Decal *(not shown)*
	Upright and Ireland-Built Cabinets
A038038-01	Midi Trak-Ball™ Assembly
A039261-01	Control Panel Harness Assembly
62-039	SPDT Momentary Pushbutton Start Switch with Red Light-Emitting Diode
75-941S	#10-24 Self-Locking Nut
75-5148B	#10-24 Black Carriage Bolt
036895-01	Black Molded Switch Bezel
160013-001	Leaf Switch and Button Holder *(leaf switch only is part no. 160012-001)*
178030-003	Black Pushbutton Assembly

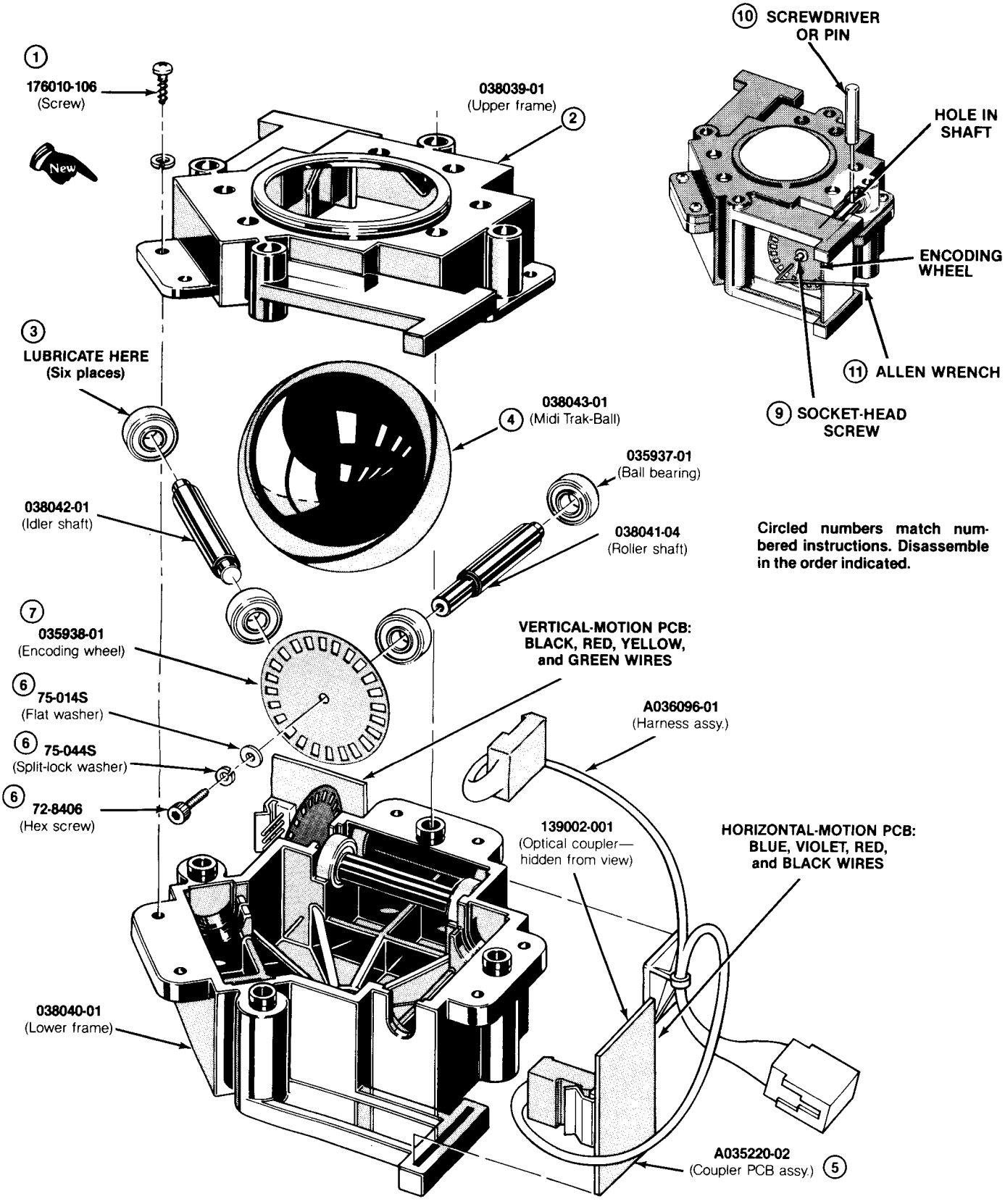

Figure 3-5 Midi Trak-Ball™ Assembly A038038-01 A

WARNING

Switch the game to *off* before removing or repairing the Midi Trak-Ball.

Lubricating the Midi Trak-Ball™

1. Remove the entire Midi Trak-Ball™ assembly from the control panel (see *Figure 3-4*). Remove the six screws that secure the upper and lower frames together (see *Figure 3-5*).
2. Lift off the top frame.
3. Lubricate each of the six ball bearings with two drops of a light-duty oil, such as 3-in-One oil. Lubricate the bearings approximately every three months or 6,000 credits (credits are counted on the coin counter).

Removing the Midi Trak-Ball™, Coupler PCB, and Encoding Wheel:

4. Follow steps 1 and 2 above. Then remove the Midi Trak-Ball™.
5. Lift the PCB out of its slot. Carefully disconnect the red connector and remove the PCB.
6. Remove the socket-head screw, flat washer, and split-lock washer that secure the encoding wheel.
7. Remove the encoding wheel.
8. Reassemble and reinstall in reverse order.

NOTE

When you replace the PCB, make sure that the metal encoding wheel is not bent or damaged. It should turn freely between the two halves of the radial optical coupler.

Adjusting the Midi Trak-Ball™ Control:

9. When you tighten the encoding wheel, rotate the socket-head screw on the end of the roller shaft until a hole in the shaft is visible through the hole in the top of the frame.
10. Insert a 3/10-inch diameter pin or screwdriver through the hole in the shaft.
11. Tighten the socket-head screw with an Allen wrench.

Midi Trak-Ball™ Assembly Parts List

Part No.	*Description*
A035220-02	Coupler PCB Assembly *(includes Radial Optical Coupler)*
A036096-01	Harness Assembly
72-8406	#4-40 x ⅜-Inch, Hex Socket-Head Steel Machine Screw
75-014S	#4 Flat SAE-Standard, Zinc-Plated Steel Washer
75-044S	#4 Split-Lock, Zinc-Plated Steel Washer
034168-01	Label with Lubrication Instructions *(not shown)*
035937-01	Ball Bearing *(6 per assembly)*
035938-01	Etched Encoding Wheel
038039-01	Upper Black Plastic Frame
038040-01	Lower Black Plastic Frame
038041-01	Roller Shaft
038042-01	Idler Shaft
038043-01	Midi-Trak-Ball *(3-inch diameter)*
139002-001	Radial Optical Coupler *(located on the Coupler PCB Assembly)*
176010-106	#8 x ⅜-Inch Cross-Recessed, Pan-Head, Zinc-Plated Steel Screw

C. Fluorescent Tube, Speaker, and Attraction Panel

WARNING

Before you remove or repair the fluorescent tube or speaker, **switch the the game to *off.***

If you drop a fluorescent tube and it breaks, *it will implode!* Shattered glass can fly six feet or more from the implosion. Use care when replacing any fluorescent tube.

Upright Cabinet

Replacing the Fluorescent Tube:

1. Remove the three screws and lock washers that secure the attraction-panel assembly to the cabinet, and remove this assembly (see *Figure 3-6*).
2. Remove the cardboard locking tab at each end of the tube. Slightly rotate the tube up or down, and carefully remove it from the tube holders.
3. Replace it with a new tube. Do not snap in the tube vigorously—*you may break it, causing an implosion!* Replace the locking tabs.
4. Check that the green ground wire is securely attached to the large metal bracket and the ballast transformer on the wood panel. If the tube is not grounded, it may not start. Reinstall in reverse order.

Upright Cabinet

Replacing the Speakers: New

1. Remove the four screws and lock washers that secure the speaker grille to the cabinet and remove the speaker grille (see *Figure 3-7*).
2. Remove the four screws that secure the speaker to the cabinet.
3. Hold the speaker securely with one hand and disconnect the two plug-in connectors on the back of the speaker. Note that the white wire (+) connects on the side marked with a painted dot. Replace the speaker and reinstall in reverse order.

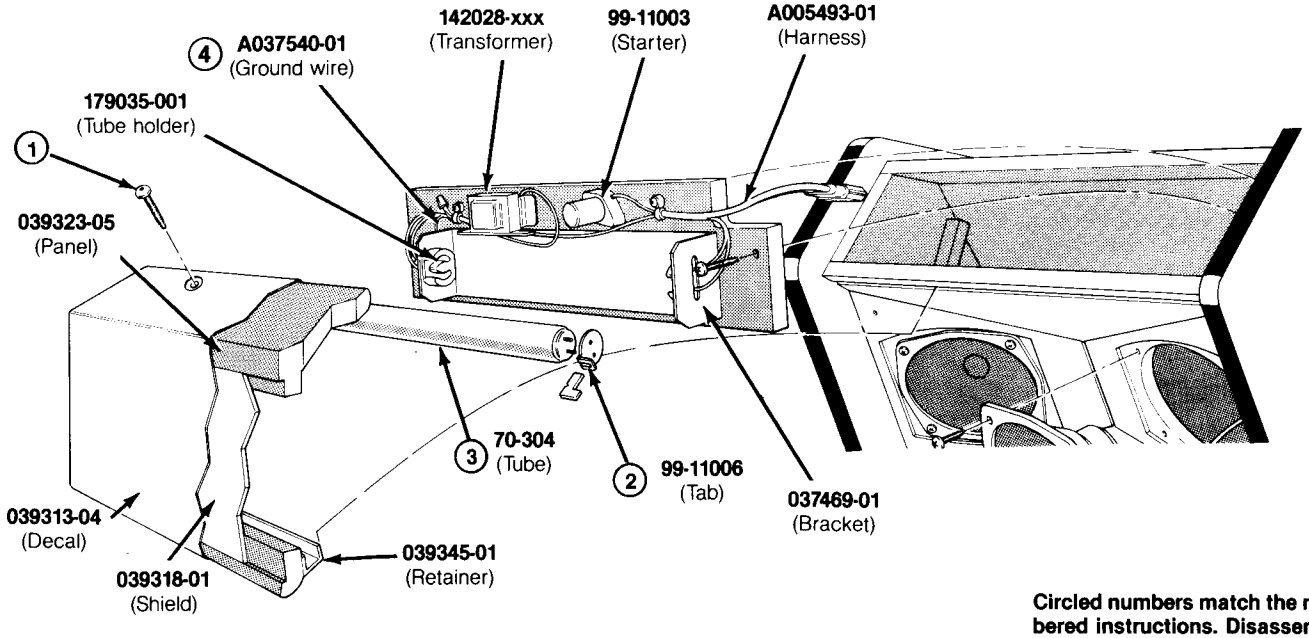

Circled numbers match the numbered instructions. Disassemble in the order indicated.

NOTE

To make sure that the fluorescent tube starts, check that the ground wire is firmly attached to the ballast transformer.

Figure 3-6 Fluorescent Tube and Attraction Panel Upright Cabinet A039305-01 A and A039307-01 A

Fluorescent Tube, Speaker, and Attraction Panel Assemblies
Upright Cabinet
Parts List

Assemblies and components in the following parts lists are shown in Figures 3-6 and 3-7

Part No.	*Description*
A005493-01	Fluorescent Tube Harness Assembly
A037540-01	Ground Wire with Ring Lug
70-304	18-Inch, 15 W, Cool White Fluorescent Tube
78-6900402	Vinyl Foam Single-Coated Adhesive Tape, ¼-Inch Wide x ⅛-Inch Thick *(24 inches required)*
79-561816P	Spring-Connector Wire Nut for 16- to 18-Gauge Wires
99-11003	Fluorescent Tube Starter
99-11006	Fluorescent Tube Locking Tab *(tab consists of two pieces)*
99-11009	Starter Socket
037469-01	Steel Tube Bracket
039313-04	Attraction Panel Decal
039314-04	Speaker Grille Decal
039318-01	Attraction Panel Shield
039323-05	Attraction Panel *(does not include shield or decal)*
039344-01	Speaker Grille
039345-01	Attraction Panel Retainer
148001-017	6 x 9-Inch Oval, 8-Ohm, 6-Ounce, Shielded High-Fidelity Speaker
142028-001	60 Hz, 118 V, Ballast Transformer *(used on A038504-01 assembly)*
142028-002	50 Hz, 118 V, Ballast Transformer *(used on A038504-02 assembly)*
179035-001	2-Pin Fluorescent Tube Holder

Circled numbers match the numbered instructions. Disassemble in the order indicated.

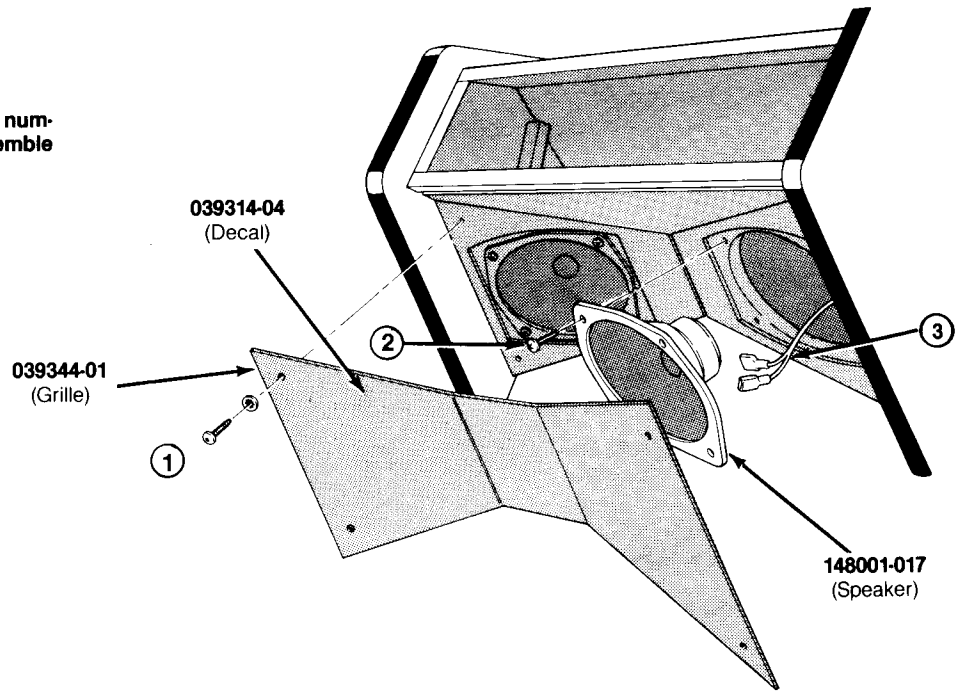

Figure 3-7 Removing the Speaker Upright Cabinet

WARNING

Before you remove or repair the fluorescent tube or speaker, **switch the the game to *off.***

If you drop a fluorescent tube and it breaks, it will implode! Shattered glass can fly six feet or more from the implosion. Use care when replacing any fluorescent tube.

Ireland-Built Cabinet

Replacing the Speaker:

1. Remove the three screws and flat washers that secure the top of the attraction panel to the cabinet (see *Figure 3-8*).
2. Grasp the panel at the top edge and pull it forward (be careful not to damage the speaker that is attached under the grille). Lift the panel up and out of the cabinet.
3. Disconnect the two speaker connectors. Note that the white wire (+) connects on the side of the speaker marked with a painted dot.
4. Remove the screws that attach the speaker to the panel. Replace the speaker. Reassemble in reverse order.

Ireland-Built Cabinet

Replacing the Fluorescent Tube:

5. Perform steps 1 and 2 above. Remove the Y-lead connectors at each end of the tube.
6. Replace with a new tube. Do not snap in the tube vigorously—*you may break it, causing an implosion!* Replace the Y-lead connectors.
7. Reassemble in reverse order.

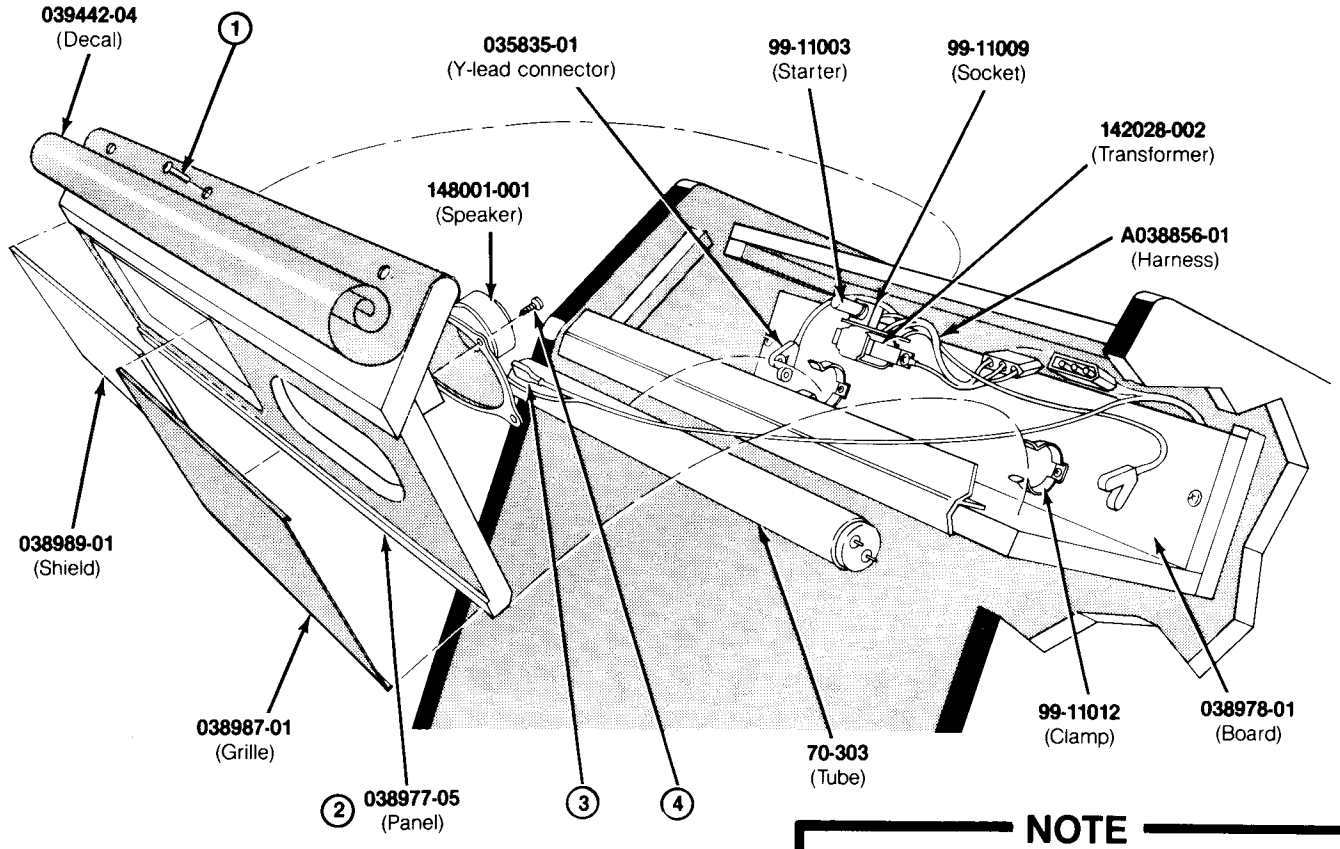

Circled numbers match numbered instructions. Disassemble in the order indicated.

NOTE

To make sure that the fluorescent tube starts, check that the ground wire is firmly attached to the ballast transformer.

Figure 3-8 Fluorescent Tube, Speaker, and Attraction Panel Ireland-Built Cabinet

Fluorescent Tube, Speaker, and Attraction Panel
Ireland-Built Cabinet
Parts List

Assemblies and components in the following parts list are shown in Figure 3-8.

Part No.	*Description*
A038856-01	Tube and Speaker Harness Assembly
70-303	18-Inch, 15-W, Cool White Fluorescent Tube
99-11003	Fluorescent Tube Starter
99-11009	Starter Socket
99-11012	1 ⅛-Inch Fluorescent Tube Clamp
035835-01	12-Inch Y-Lead Connector
039442-04	Attraction Panel Decal
038977-05	Speaker/Attraction Panel
038987-01	Speaker/Attraction Panel Grille
038989-01	Attraction Panel Shield *(does not include decal)*
142028-002	50 Hz, 118 V, Ballast Transformer
148001-001	6 x 9-Inch Oval, 4-Ohm, 6-Ounce, Shielded High-Fidelity Speaker

D. Video Display

WARNING

SHOCK HAZARD

The following procedure should only be performed by a *qualified service technician.* Before removing or repairing the video display, **switch the game to *off.*** As an extra precaution, we highly recommend you **discharge the high voltage** from the picture tube.

High voltages may exist in any video display, even with power disconnected. Use extreme caution and do not touch electrical parts of the display with your hands or with metal objects in your hands!

IMPLOSION HAZARD

If you drop the display and the picture tube breaks, *it will implode!* Shattered glass and the yoke can fly six feet or more from the implosion. Use care when replacing any display.

Upright Cabinet

Removing the Video Display:

1. From the back of the cabinet, open the rear access panel. Unplug the display harness connectors and disconnect the ground wire (see *Figure 3-9).*
2. Remove the hardware that secures the display chassis to the rear bracket.
3. Open the control panel (see *Figure 3-3).*
4. Grasp the video display shield and slide it down into the cut-out area below the shield. Tilt the shield forward and lift it up and out of the cabinet.
5. Remove the cardboard bezel.
6. Remove the four sets of hardware that secure the video display to the cabinet.
7. Carefully remove the display through the front of the cabinet. Place it on a soft mat in a protected location. After servicing the display, reinstall it in reverse order.

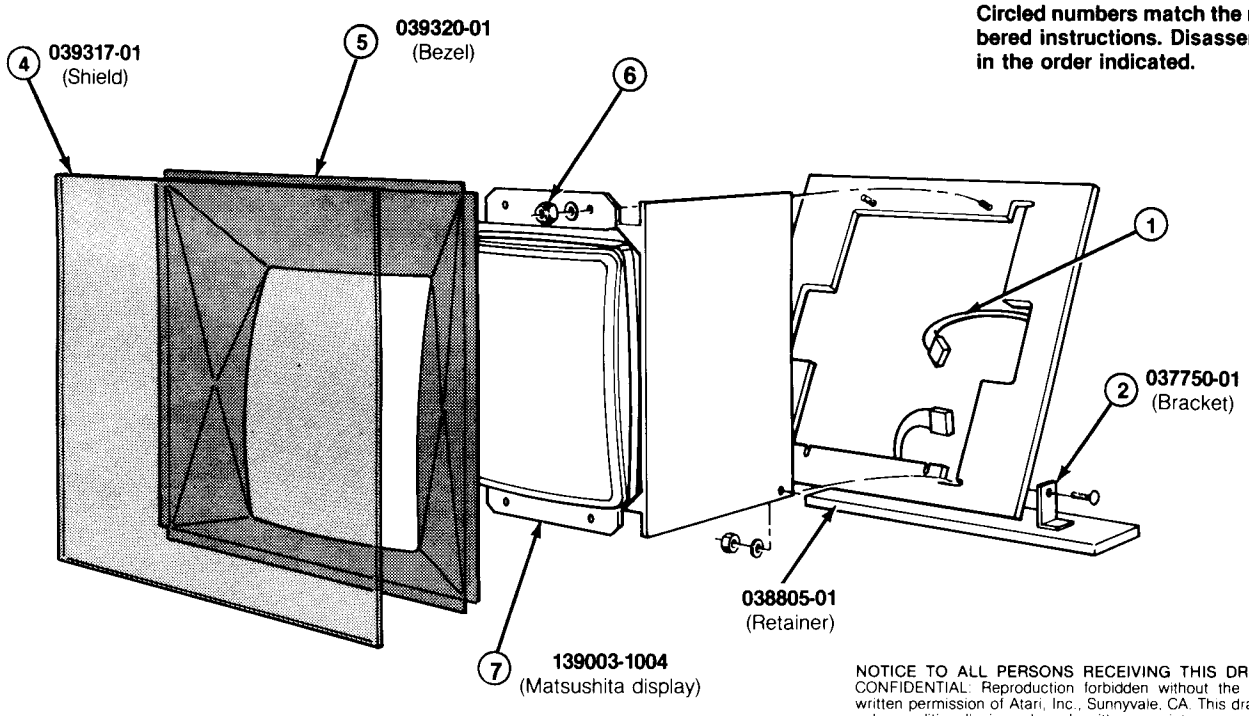

NOTICE TO ALL PERSONS RECEIVING THIS DRAWING CONFIDENTIAL: Reproduction forbidden without the specific written permission of Atari, Inc., Sunnyvale, CA. This drawing is only conditionally issued, and neither receipt nor possession thereof confers or transfers any right in, or license to use, the subject matter of the drawing or any design or technical information shown thereon, nor any right to reproduce this drawing or any part thereof. Except for manufacture by vendors of Atari, Inc., and for manufacture under the corporation's written license, no right to reproduce this drawing is granted or the subject matter thereof unless by written agreement with or written permission from the corporation.

Figure 3-9 Video Display Upright Cabinet

WARNING

The following procedure should only be performed by a *qualified service technician.* Before removing or repairing the video display, **switch the game to *off.*** As an extra precaution, we highly recommend you **discharge the high voltage** from the picture tube.

High voltages may exist in any video display, even with power disconnected. Use extreme caution and do not touch electrical parts of the display with your hands or with metal objects in your hands!

IMPLOSION HAZARD

If you drop the display and the picture tube breaks, *it will implode!* Shattered glass and the yoke can fly six feet or more from the implosion. Use care when replacing any display.

Ireland-Built Cabinet

Removing the Video Display:

1. From the back of the cabinet, open the rear access panel. Unplug the display harness connectors and disconnect the ground wire (see *Figure 3-10).*
2. Remove the hardware that secures the display chassis to the rear bracket.
3. From the front of the cabinet, open the control panel (see *Figure 3-3).*
4. Grasp the metal retainer that holds the bottom of the video display shield and slide the retainer and the shield down and out of the cabinet.
5. Remove the cardboard bezel.
6. The display is secured to the cabinet with metal brackets. Remove the four sets of hardware that secure the display to these brackets.
7. Carefully pull the display out through the front of the cabinet. Place the display in a protected location. After servicing the display, reinstall it in reverse order.

Circled numbers match the numbered instructions. Disassemble in the order indicated.

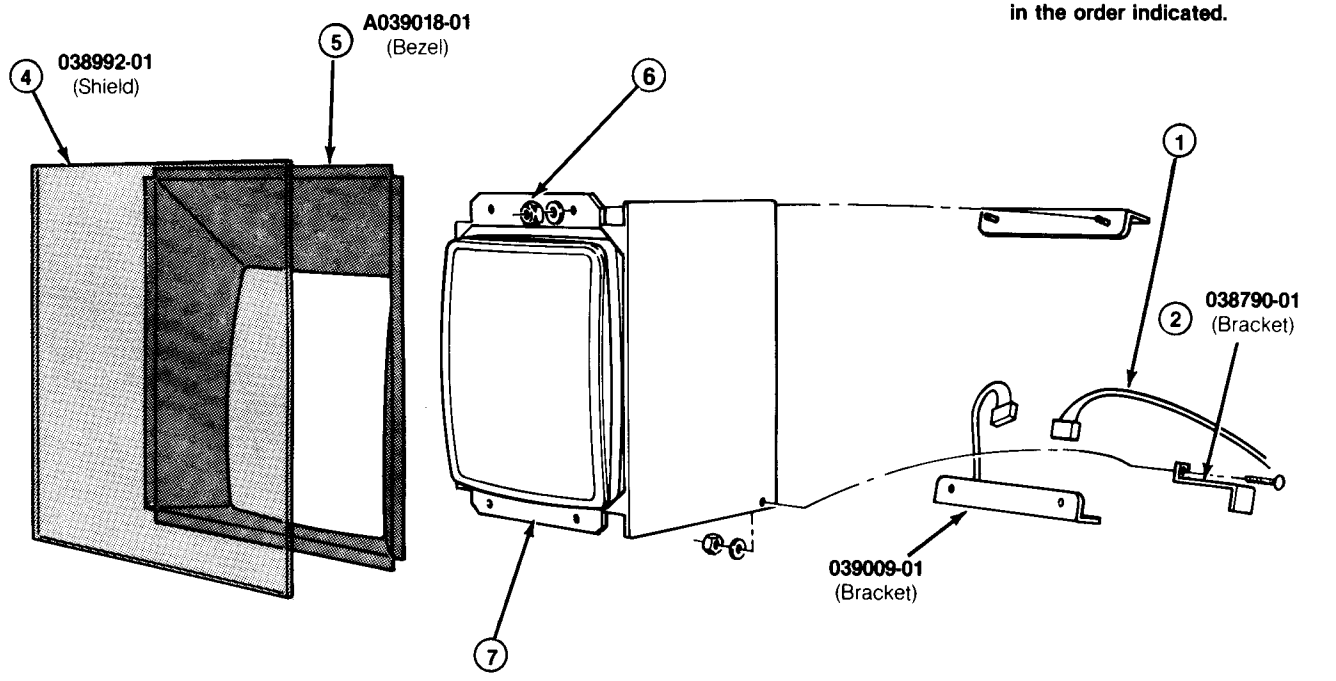

Figure 3-10 Video Display Ireland-Built Cabinet

Video Display
Upright and Ireland-Built Cabinets
Parts List

Assemblies and components in the following parts list are shown in Figures 3-9 and 3-10.

Part No.	*Description*	
	For Upright Cabinet	
037750-01	Display Support Bracket	
039317-01	Display Shield	
039320-01	Display Bezel	
139003-1004	19-Inch Matsushita Color Raster-Scan Display	
	For Ireland-Built Cabinet	
039018-01	Display Bezel	
038790-01	Front Display Support Bracket	
038805-01	Display Shield Retainer	
038992-01	Display Shield	
039009-01	Rear Display Support Bracket	
139003-1004	19-Inch Matsushita Color Raster-Scan Display	*Acceptable substitute is part no. 92-049*

E. Utility Panel

WARNING

Before removing or repairing the utility panel, **switch the game to *off*.**

Players may receive an electric shock if the utility panel is not properly grounded! After servicing any parts on the panel, make sure that the ground wire is firmly attached to the metal screw on the back of the coin counter.

NOTE

Only the Ireland-Built cabinet has two coin counters.

The utility panel is located inside the upper coin door. This panel includes the volume control, self-test switch, auxiliary coin switch, and the coin counter(s). The coin switch is used to credit the game without activating the coin counter.

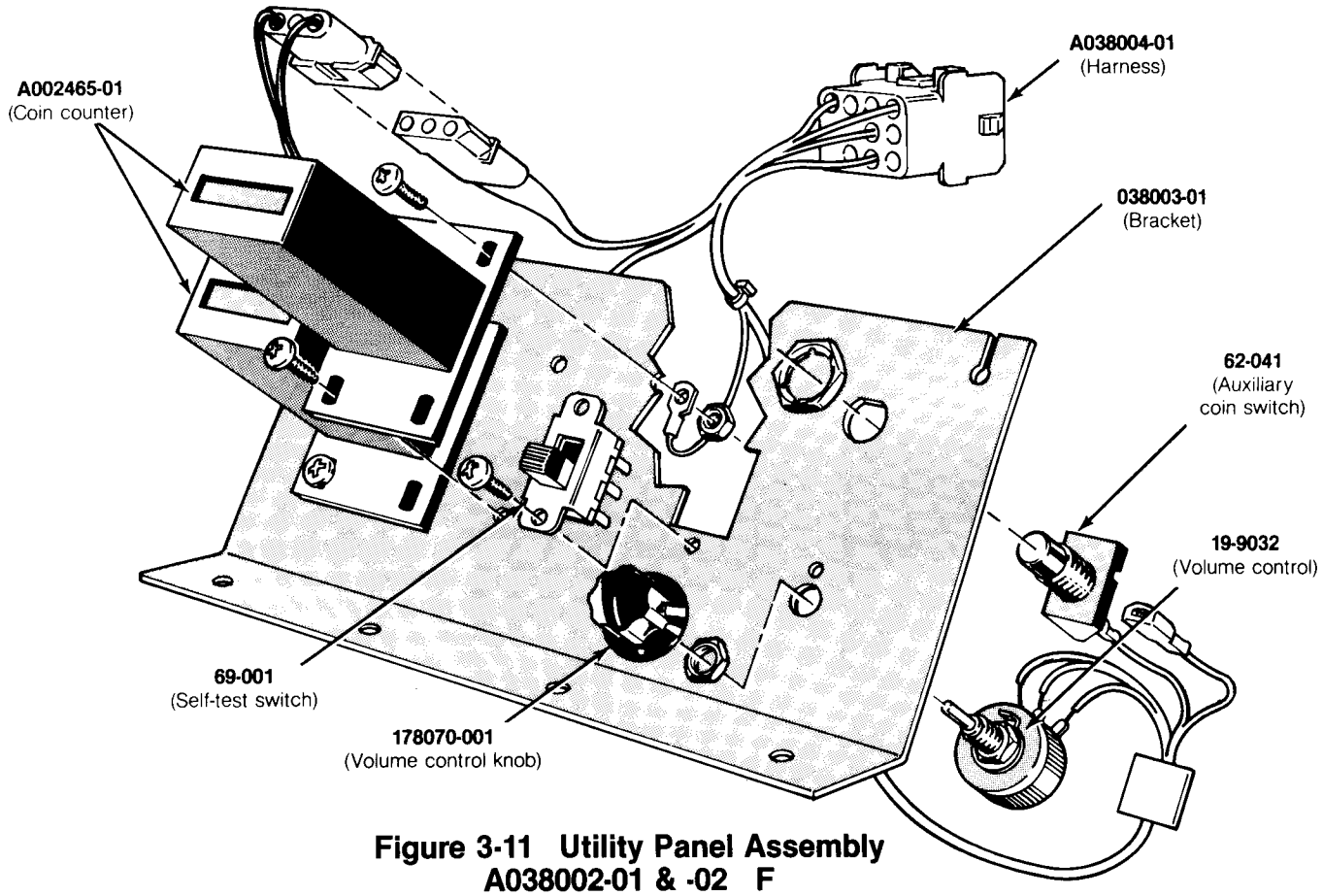

Figure 3-11 Utility Panel Assembly A038002-01 & -02 F

Parts List

Part No.	*Description*
A002465-01	6 V Coin Counter
A038004-01	Utility Panel Harness
19-9032	Volume Control
62-041	SPDT Momentary-Contact Pushbutton Auxiliary Coin Switch with Black Cap
69-001	DPDT Self-Test Switch
038003-01	Utility Panel Bracket
178070-001	Volume Control Knob

F. Coin Door

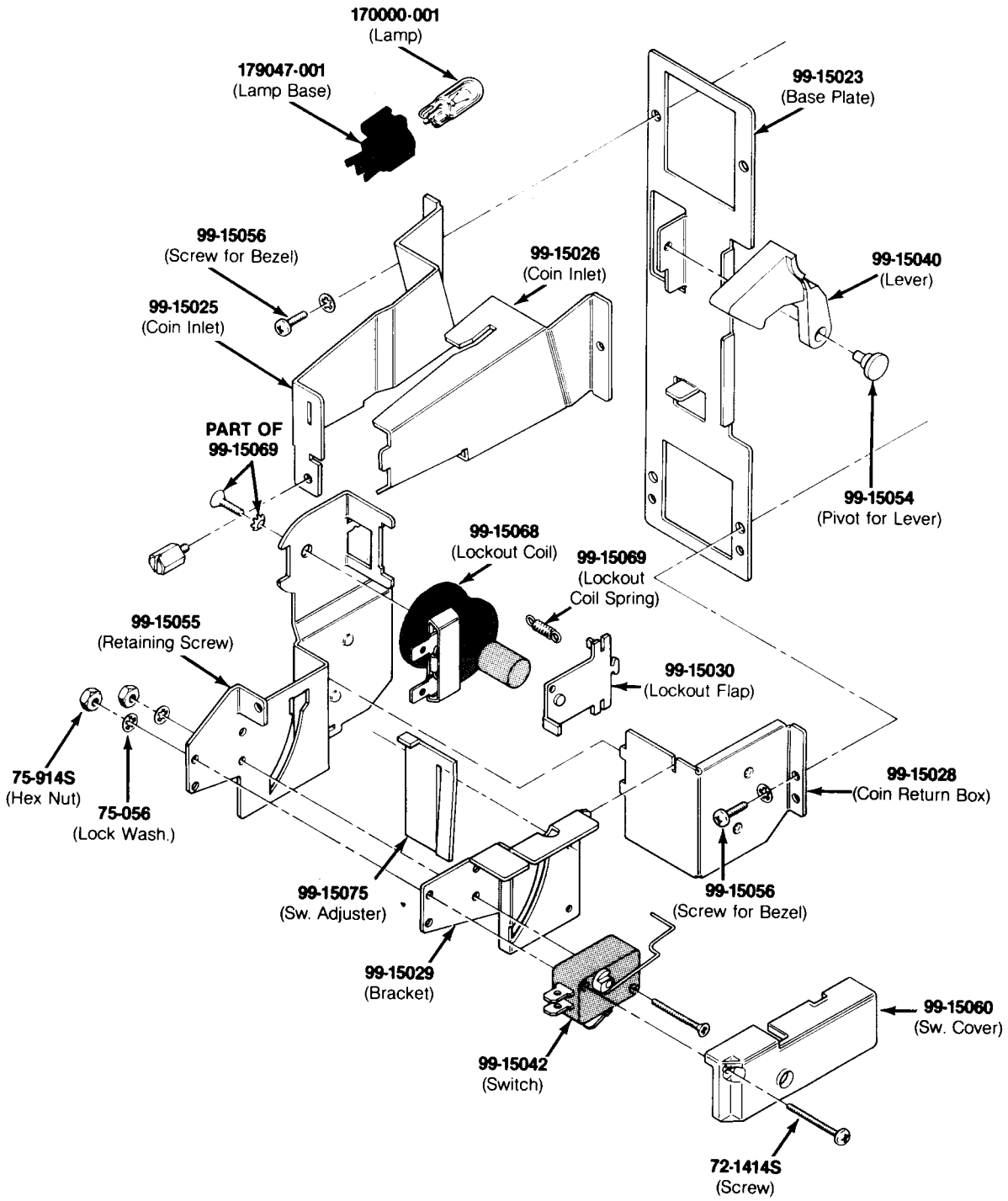

Figure 3-12 Vertically Mounted Coin Door Assembly A037619-xx D

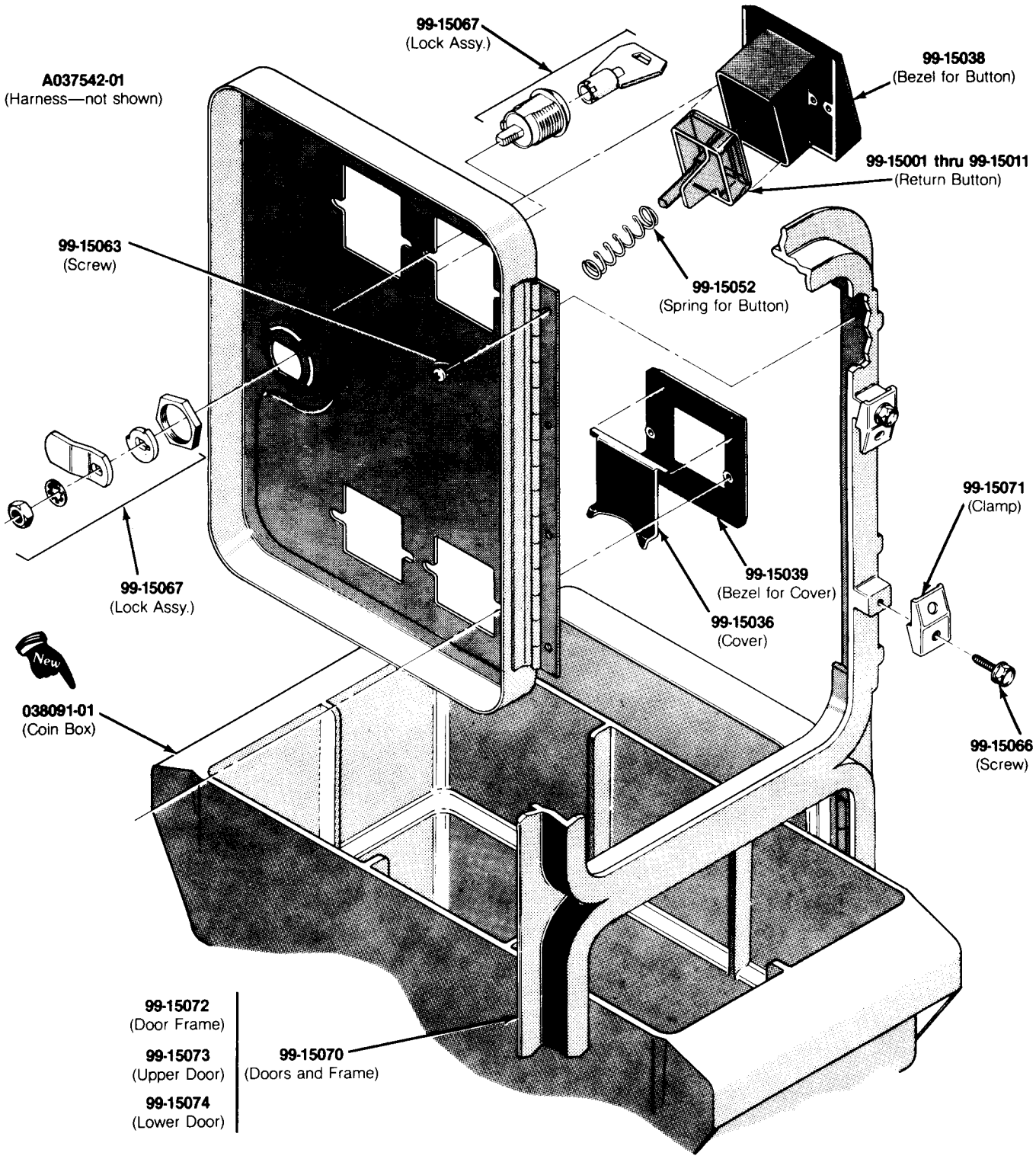

A037619-01 — U.S. 25¢/25¢ Coin Door
A037619-02 — U.S. 50¢/50¢ Coin Door
A037619-03 — Canadian 25¢/25¢ Coin Door
A037619-04 — British 10 P/10 P Coin Door
A037619-05 — British 10 P/50 P Coin Door
A037619-06 — British 20 P/50 P Coin Door
A037619-07 — Australian 20¢/20¢ Coin Door
A037619-08 — German 1 DM/1 DM Coin Door
A037619-09 — German 2 DM/1 DM Coin Door
A037619-10 — German 2 DM/5 DM Coin Door
A037619-11 — German 1 DM/5 DM Coin Door
A037619-12 — 5 Fr/5 Fr Coin Door
A037619-13 — Swiss 1 Fr/1 Fr Coin Door
A037619-14 — French 1 Fr/1 Fr Coin Door
A037619-15 — French 2 Fr/1 Fr Coin Door
A037619-16 — Swedish 1 Kr/1 Kr Coin Door
A037619-17 — Spanish 25 Pts/25 Pts Coin Door
A037619-18 — Italian 100 L/100 L Coin Door
A037619-19 — Hong Kong $1/$1 Coin Door
A037619-20 — Japanese 100Y/100Y Coin Door

Figure 3-12 Vertically Mounted Coin Door Assembly, continued
A037619-xx D

Vertically Mounted Coin Door Parts List

Assemblies and components in the following parts list are shown in Figure 3-12.

Part No.	*Description*
A037542-01	Harness Assembly
72-1414S	#4-40 × 7/8-Inch Cross-Recessed Pan-Head Steel Machine Screw
75-056	#6 Internal-Tooth Zinc-Plated Steel Lock Washer
75-914S	#4-40 Steel Machine Hex Nut
75-3414S	#4-40 × 7/8-Inch 82° Cross-Recessed Flat-Head Steel Machine Screw
99-15001	Coin Return Button with U.S. 25¢ Price Plate
99-15002	Coin Return Button with U.S. $1 Price Plate
99-15003	Coin Return Button with German 1 DM Price Plate
99-15004	Coin Return Button with German 2 DM Price Plate
99-15005	Coin Return Button with German 5 DM Price Plate
99-15006	Coin Return Button with Belgian 5 Fr Price Plate
99-15007	Coin Return Button with French 1 Fr Price Plate
99-15008	Coin Return Button with Japanese 100 Yen Price Plate
99-15009	Coin Return Button with British 10 Pence Price Plate
99-15010	Coin Return Button with Australian 20¢ Price Plate
99-15011	Coin Return Button with Italian 100 Lire Price Plate
99-15023	Base Plate
99-15025	Left Half of Coin Inlet
99-15026	Right Half of Coin Inlet
99-15027	Side Plate of Coin Return Box
99-15028	Base Plate of Coin Return Box
99-15029	Switch Bracket
99-15030	Flap for Lockout Coil *(U.S. 25¢)*
99-15036	Metal Coin Return Cover
99-15038	Bezel for Coin Return Button
99-15039	Metal Bezel for Coin Return Cover
99-15040	Coin Return Lever
99-15042	Coin Switch for U.S. 25¢
99-15052	Spring for Coin Return Button
99-15054	Pivot for Coin Return Lever
99-15055	Retaining Screw
99-15056	#4-40 × 5/16-Inch Cross-Recessed Pan-Head Steel Machine Screw
99-15060	Switch Cover
99-15063	Screw for Hinge
99-15066	Screw for Clamp
99-15067	Lock Assembly
99-15068	Lockout Coil
99-15069	Spring for Lockout Coil
99-15070	Doors and Frame
99-15071	Clamp for Frame
99-15072	Door Frame
99-15073	Upper Door
99-15074	Lower Door
99-15075	Switch Adjuster
038091-01	Coin Box *(Not included in assembly) Acceptable substitute is part number A037491-01*
170000-001	6.3V Miniature Wedge-Base Incandescent Lamp
171006-035	Metal Coin Mechanism
179047-001	Lamp Base

G. Printed-Circuit Boards

WARNING

Before you remove or repair any printed-circuit board (PCB), switch the game to *off*.

Removing the Printed-Circuit Boards:

1. Open the rear access panel.
2. The *Upright* game PCB is located inside the electromagnetic interference (EMI) cage (see *Figure 3-13*). Unplug the two edge connectors on the EMI shield PCB.
3. To remove the PCB, pull the eight nylon snap-in fasteners on the EMI shield PCB to the unlocked position. Carefully slide the shield PCB with attached game PCB straight out of its guide. Be careful not to twist the board, as this may loosen connections or components. Replace or repair as required, and reinstall the PCBs.
4. To remove the *Ireland-Built* game PCB, remove the screw and two washers that secure the PCB to the cabinet. **Carefully** slide the PCB straight out of its retainer. Be careful not to twist the board, as this may loosen connections or components. Replace or repair as required, and reinstall the PCB.
5. To remove the *Regulator/Audio II PCB,* first disconnect the five small harness connectors on this board.
6. Remove the hardware that secures the Regulator/Audio II PCB to the cabinet, and carefully remove the board from its retainer. Do not twist the board, as this may loosen connections or components. Replace or repair as required, and reinstall the PCB.

CAUTION

Make sure that the connectors on each PCB are properly plugged in. Note that they are keyed to fit only one way. If they do not slip on easily, do not force them. **A reversed connector may damage your game** and void the warranty.

7. Close and lock the rear access panel.
8. **Important:** Perform the self-test.

NOTE

The Federal Communications Commission requires that the game PCB be housed in the EMI cage with the Shield PCB attached.

Game PCB Removal from EMI Cage New

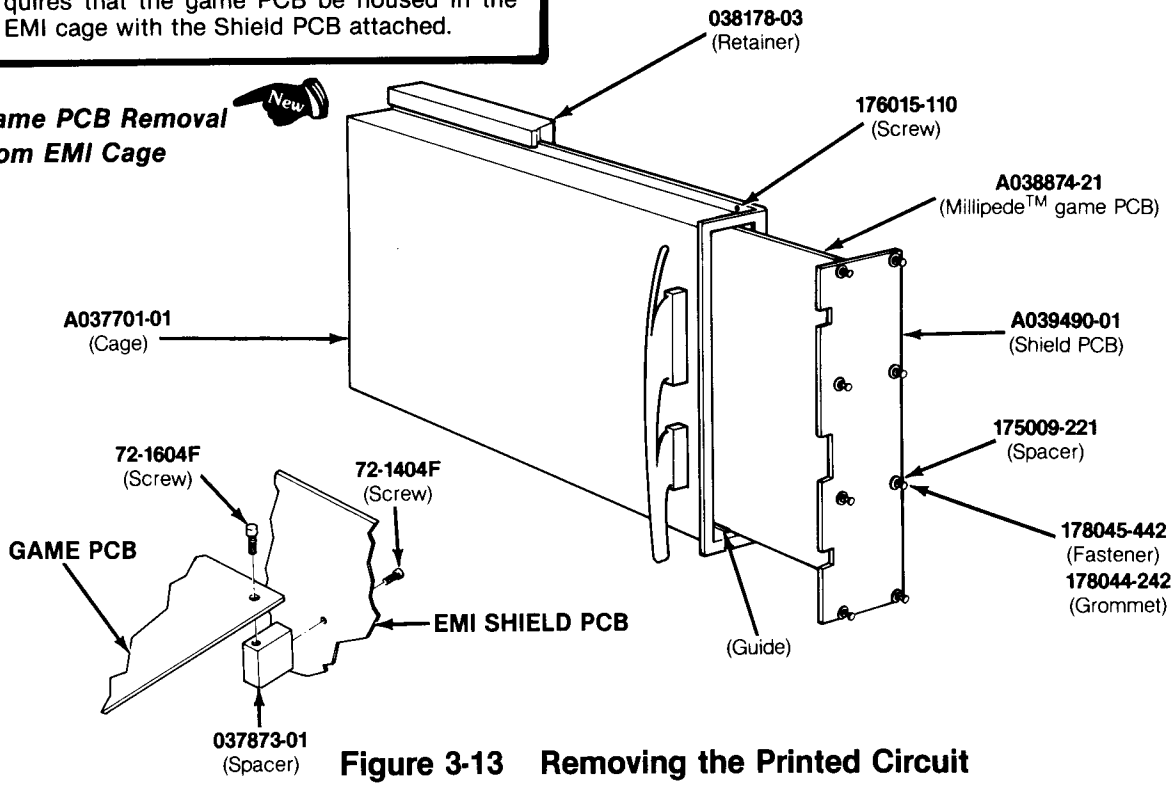

Figure 3-13 Removing the Printed Circuit Boards (PCBs)

Regulator/Audio II PCB Removal ***Game PCB Removal Without EMI Cage***

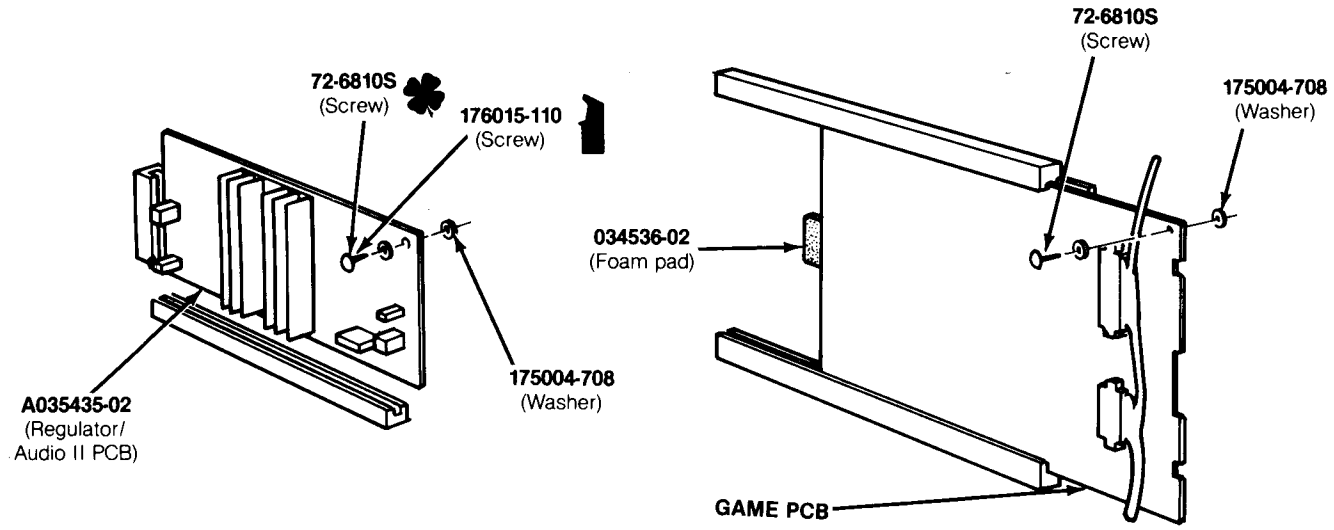

Figure 3-13 Removing the Printed Circuit Boards (PCBs)

Printed-Circuit Board Mounting Hardware Parts List

Assemblies and components in the following parts list are shown in Figure 3-13.

Part No.	*Description*
	Upright Cabinet
A037701-01	Electromagnetic Interference (EMI) Cage *(includes guide)*
A039490-01	EMI Shield PCB
72-1404F	#4-40 x ¼-Inch Cross-Recessed Steel Screw
72-1604F	#6-32 x ¼-Inch Cross-Recessed Steel Screw
037873-01	Spacer
038178-03	Dual-Slotted Retainer
175009-221	Plastic Spacer
176015-110	#10 x ⅝-Inch Cross-Recessed Pan-Head Screw
178044-242	Grommet
178045-442	Snap-In Fastener
	Plastic Guide
	Upright and Ireland-Built Cabinets
72-6810S	#8 x ⅝-Inch Cross-Recessed Pan-Head Screw
034536-02	Foam Pad
175004-708	#8 Fiber Washer

NOTICE TO ALL PERSONS RECEIVING THIS DRAWING
CONFIDENTIAL. Reproduction forbidden without the specific written permission of Atari, Inc., Sunnyvale, CA. This drawing is only conditionally issued, and neither receipt nor possession thereof confers or transfers any right in, or license to use, the subject matter of the drawing or any design or technical information shown thereon, nor any right to reproduce this drawing or any part thereof. Except for manufacture by vendors of Atari, Inc., and for manufacture under the corporation's written license, no right to reproduce this drawing is granted or the subject matter thereof unless by written agreement with or written permission from the corporation.

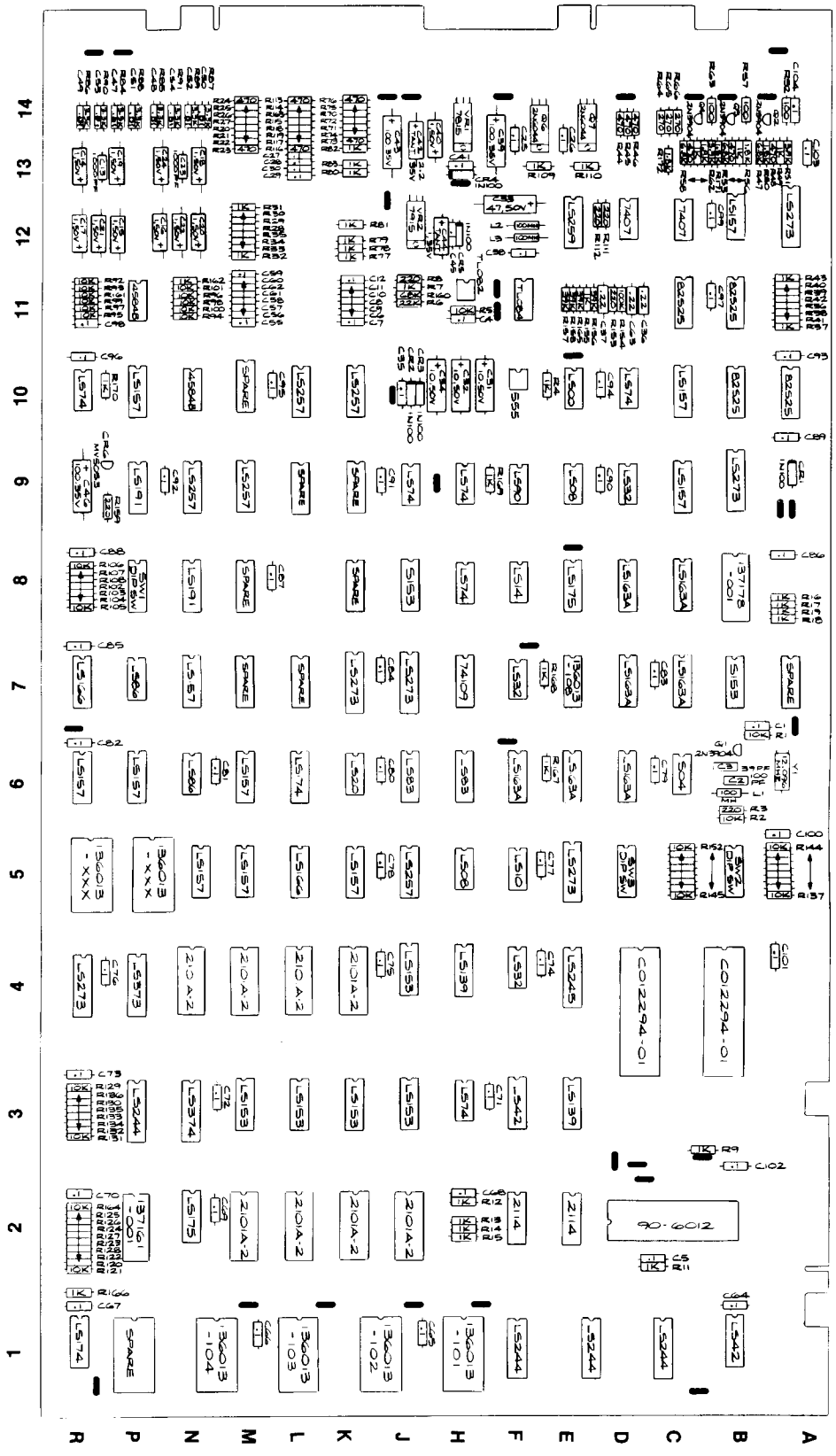
1 2 3 4 5 6 7 8 9 10 11 12 13 14
R P N M L K J H F E D C B A
90-6012
C012294-01
C012294-01
SPARE
SPARE
SPARE

Millipede™ Game Printed-Circuit Board Assembly Parts List

Designator	Description	Part No.
	Capacitors	
C1	0.1 μF, 50 V Ceramic-Disc Radial-Lead Capacitor	122002-104
C2	100 pF, 100 V, Mica Epoxy-Dipped Radial Lead Mica Capacitor	128002-101
C3	39 pF, 100 V, Epoxy-Dipped Radial Lead Mica Capacitor	128002-390
C4-C12	0.1 μF, 50 V Ceramic-Disc Radial-Lead Capacitor	122002-104
C13	1000 pF, ±20%, 50 V Minimum Ceramic Capcitor	122009-102
C14-C22	1 μF, 50 V, Aluminum Electrolytic Fixed Axial-Lead Capacitor	24-500105
C23	1000 pF, ±20%, 50 V Minimum Ceramic Capcitor	122009-102
C24	1 μF, 50 V, Aluminum Electrolytic Fixed Axial-Lead Capacitor	24-500105
C25-C30	0.1 μF, 50 V Ceramic-Disc Radial-Lead Capacitor	122002-104
C31, C32	10 μF, 50 V, Aluminum Electrolytic Fixed Axial-Lead Capacitor	24-500106
C33	47 μF, 50 V, Aluminum Electrolytic Fixed Axial-Lead Capacitor	24-500476
C34	10 μF, 50 V, Aluminum Electrolytic Fixed Axial-Lead Capacitor	24-500106
C35	0.1 μF, 50 V Ceramic-Disc Radial-Lead Capacitor	122002-104
C36, C37	0.22 μF, 25 V Ceramic-Disc Radial-Lead Capacitor	122008-224
C38	0.1 μF, 50 V Ceramic-Disc Radial-Lead Capacitor	122002-104
C39	100 μF, 35 V, Aluminum Electrolytic Fixed Axial-Lead Capacitor	24-350107
C40	1 μF, 50 V, Aluminum Electrolytic Fixed Axial-Lead Capacitor	24-500105
C41	0.1 μF, 50 V Ceramic-Disc Radial-Lead Capacitor	122002-104
C42	2.2 μF, ±20%, 35 V Tantalum Capacitor	122000-225
C43	100 μF, 35 V, Aluminum Electrolytic Fixed Axial-Lead Capacitor	24-350107
C44	1 μF, ±10%, 35 V Axial-Lead Tantalum Capacitor	29-006
C45	0.1 μF, 50 V Ceramic-Disc Radial-Lead Capacitor	122002-104
C46	100 μF, 35 V, Aluminum Electrolytic Fixed Axial-Lead Capacitor	24-350107
C47-C54	0.01 μF, 25 V Ceramic-Disc Radial-Lead Capacitor	122005-103
C55-C62	0.1 μF, 50 V Ceramic-Disc Radial-Lead Capacitor	122002-104
C63	0.22 μF, 25 V Ceramic-Disc Radial-Lead Capacitor	122008-224
C64-C104	0.1 μF, 50 V Ceramic-Disc Radial-Lead Capacitor	122002-104
	Diodes	
CR1-CR5	80 V, Type-1N100 Diode	31-1N100
CR6	Type-MV5053 Light-Emitting Diode	38-MV5053
	Integrated Circuits	
1B	Type-74LS42 Integrated Circuit	37-74LS42
1C/D, 1D/E, 1F	Type-74LS244 Integrated Circuit	37-74LS244
1R	Type-74LS174 Integrated Circuit	37-74LS174
2C	Type-6502B Microprocessor	90-6012
2N	Type-74LS175 Integrated Circuit	37-74LS175
3E	Type-74LS139 Integrated Circuit	37-74LS139
3F	Type-74LS42 Integrated Circuit	37-74LS42
3H	Type-74LS74 Integrated Circuit	37-74LS74

(Continued on next page)

Millipede™ Game Printed-Circuit Board Assembly Parts List, continued

Designator	*Description*	*Part No.*
3J-3M	Type-74LS153 Integrated Circuit	37-74LS153
3N	Type-74LS374 Integrated Circuit	37-74LS374
3P	Type-74LS244 Integrated Circuit	37-74LS244
4B	Audio I/O N-Channel MOS/LSI Custom Integrated Circuit	C012294-01
4D	Audio I/O N-Channel MOS/LSI Custom Integrated Circuit	C012294-01
4E	Type-74LS245 Integrated Circuit	37-74LS245
4F	Type-74LS32 Integrated Circuit	37-74LS32
4H	Type-74LS139 Integrated Circuit	37-74LS139
4J	Type-74LS153 Integrated Circuit	37-74LS153
4P	Type-74LS373 Integrated Circuit	37-74LS373
4R, 5E	Type-74LS273 Integrated Circuit	37-74LS273
5F	Type-74LS10 Integrated Circuit	37-74LS10
5H	Type-74LS08 Integrated Circuit	37-74LS08
5J	Type-74LS257 Integrated Circuit	37-74LS257
5K	Type-74LS157 Integrated Circuit	37-74LS157
5L	Type-74LS166 Integrated Circuit	37-74LS166
5M, 5N	Type-74LS157 Integrated Circuit	37-74LS157
6C	Type-74S04 Integrated Circuit	37-74S04
6D-6F	Type-74LS163A Integrated Circuit	37-74LS163A
6H, 6J	Type-74LS83 Integrated Circuit	37-74LS83
6K	Type-74LS20 Integrated Circuit	37-74LS20
6L	Type-74LS174 Integrated Circuit	37-74LS174
6M	Type-74LS157 Integrated Circuit	37-74LS157
6N	Type-74LS86 Integrated Circuit	37-74LS86
6P, 6R	Type-74LS157 Integrated Circuit	37-74LS157
7B	Type-74S153 Integrated Circuit	137207-001
7C, 7D	Type-74LS163A Integrated Circuit	37-74LS163A
7F	Type-74LS32 Integrated Circuit	37-74LS32
7H	Type-74109 Integrated Circuit	37-74109
7J, 7K	Type-74LS273 Integrated Circuit	37-74LS273
7N	Type-74LS157 Integrated Circuit	37-74LS157
7P	Type-74LS86 Integrated Circuit	37-74LS86
7R	Type-74LS166 Integrated Circuit	37-74LS166
8C, 8D	Type-74LS163A Integrated Circuit	37-74LS163A
8E	Type-74LS175 Integrated Circuit	37-74LS175
8F	Type-74LS14 Integrated Circuit	37-74LS14
8H	Type-74LS74 Integrated Circuit	37-74LS74
8J	Type-74S153 Integrated Circuit	137207-001
8N	Type-74LS191 Integrated Circuit	37-74LS191
9B	Type-74LS273 Integrated Circuit	37-74LS273
9C	Type-74LS157 Integrated Circuit	37-74LS157
9D	Type-74LS32 Integrated Circuit	37-74LS32
9E	Type-74LS08 Integrated Circuit	37-74LS08
9F	Type-74LS90 Integrated Circuit	37-74LS90

(Continued on next page)

Millipede™ Game Printed-Circuit Board Assembly Parts List, continued

Designator	*Description*	*Part No.*
9H, 9J	Type-74LS74 Integrated Circuit	37-74LS74
9M, 9N	Type-74LS257 Integrated Circuit	37-74LS257
9P	Type-74LS191 Integrated Circuit	37-74LS191
10C	Type-74LS157 Integrated Circuit	37-74LS157
10D	Type-74LS74 Integrated Circuit	37-74LS74
10E	Type-74LS00 Integrated Circuit	37-74LS00
10F	Type-555 Timer Integrated Circuit	37-555
10K, 10L	Type-74LS257 Integrated Circuit	37-74LS257
10N	Type-4584B Hex Schmitt Trigger Integrated Circuit	37-4584B
10P	Type-74LS157 Integrated Circuit	37-74LS157
10R	Type-74LS74 Integrated Circuit	37-74LS74
11F	Dual Operational-Amplifier Integrated Circuit	37-347
11H	Quad Operational-Amplifier Integrated Circuit	37-TL082CP
11P	Type-4584B Hex Schmitt Trigger Integrated Circuit	37-4584B
12A	Type-74LS273 Integrated Circuit	37-74LS273
12B	Type-74LS157 Integrated Circuit	37-74LS157
12C, 12D	Type-7407 Integrated Circuit	37-7407
12E	Type-74LS259 Integrated Circuit	37-74LS259
	Programmable Read-Only Memories	
1H	Erasable Programmable Read-Only Memory	136013-101
1J/K	Erasable Programmable Read-Only Memory	136013-102
1L	Erasable Programmable Read-Only Memory	136013-103
1M/N	Erasable Programmable Read-Only Memory	136013-104
7E	Programmable Read-Only Memory	136001-213
	Random-Access Memories	
2E, 2F	Random-Access Memory	90-7033
2J-2M	Random-Access Memory *Acceptable substitute is part no. 137250-002*	137250-001
4K-4N	Random-Access Memory *Acceptable substitute is part no. 137250-002*	137250-001
8B	Random-Access Memory *Acceptable substitute is part no. 137271-001*	137178-001
10A, 10B	Random-Access Memory	90-7005
11B, 11C	Random-Access Memory	90-7005
	Read-Only Memories	
2P	Electrically-Alterable Read-Only Memory	137161-001
5P	Read-Only Memory	136013-109
5R	Read-Only Memory	136013-110

(Continued on next page)

Millipede™ Game Printed-Circuit Board Assembly Parts List, continued

Designator	*Description*	*Part No.*
	Resistors	
R1, R2	10 KΩ, ±5%, ¼ W Resistor	110000-103
R3	220 Ω, ±5%, ¼ W Resistor	110000-221
R4	1 KΩ, ±5%, ¼ W Resistor	110000-102
R5	10 KΩ, ±5%, ¼ W Resistor	110000-103
R6	22 KΩ, ±5%, ¼ W Resistor	110000-223
R7	1 KΩ, ±5%, ¼ W Resistor	110000-102
R8	220 Ω, ±5%, ¼ W Resistor	110000-221
R9-R19	1 KΩ, ±5%, ¼ W Resistor	110000-102
R20-R27	470 Ω, ±5%, ¼ W Resistor	110000-471
R28-R43	1 KΩ, ±5%, ¼ W Resistor	110000-102
R44-R46	470 Ω, ±5%, ¼ W Resistor	110000-471
R47	6.8 KΩ, ±5%, ¼ W Resistor	110000-682
R48	470 Ω, ±5%, ¼ W Resistor	110000-471
R49	1 KΩ, ±5%, ¼ W Resistor	110000-102
R50, R51	1.8 KΩ, ±5%, ¼ W Resistor	110000-182
R52	100 Ω, ±5%, ¼ W Resistor	110000-101
R53	6.8 KΩ, ±5%, ¼ W Resistor	110000-682
R54	470 Ω, ±5%, ¼ W Resistor	110000-471
R55	1 KΩ, ±5%, ¼ W Resistor	110000-102
R56	1.8 KΩ, ±5%, ¼ W Resistor	110000-182
R57	100 Ω, ±5%, ¼ W Resistor	110000-101
R58	6.8 KΩ, ±5%, ¼ W Resistor	110000-682
R59	470 Ω, ±5%, ¼ W Resistor	110000-471
R60	1 KΩ, ±5%, ¼ W Resistor	110000-102
R61, R62	1.8 KΩ, ±5%, ¼ W Resistor	110000-182
R63	100 Ω, ±5%, ¼ W Resistor	110000-101
R64-R66	270 Ω, ±5%, ¼ W Resistor	110000-271
R70-R76	470 Ω, ±5%, ¼ W Resistor	110000-471
R77-R83	1 KΩ, ±5%, ¼ W Resistor	110000-102
R84-R91	3.3 KΩ, ±5%, ¼ W Resistor	110000-332
R92-R108	10 KΩ, ±5%, ¼ W Resistor	110000-103
R109, R110	1 KΩ, ±5%, ¼ W Resistor	110000-102
R111, R112	220 Ω, ±5%, ¼ W Resistor	110000-221
R113-R119	470 Ω, ±5%, ¼ W Resistor	110000-471
R120-R152	10 KΩ, ±5%, ¼ W Resistor	110000-103
R153	220 Ω, ±5%, ¼ W Resistor	110000-221
R154	100 KΩ, ±5%, ¼ W Resistor	110000-104
R155	1 KΩ, ±5%, ¼ W Resistor	110000-102
R156-R158	39 KΩ, ±5%, ¼ W Resistor	110000-393
R159	220 Ω, ±5%, ¼ W Resistor	110000-221
R160	68 KΩ, ±5%, ¼ W Resistor	110000-683
R161, R162	1 KΩ, ±5%, ¼ W Resistor	110000-102
R163	470 Ω, ±5%, ¼ W Resistor	110000-471
R164	10 KΩ, ±5%, ¼ W Resistor	110000-103

(Continued on next page)

Millipede™ Game Printed-Circuit Board Assembly Parts List, continued

Designator	*Description*	*Part No.*
R165	39 KΩ, ±5%, ¼ W Resistor	110000-393
R166-R170	1 KΩ, ±5%, ¼ W Resistor	110000-102
R171, R172	1.8 KΩ, ±5%, ¼ W Resistor	110000-182
	Sockets	
1H, 1L, 1M/N	24 Contact, Medium-Insertion-Force IC Socket	79-42C24
2C	40 Contact, Medium-Insertion-Force IC Socket	79-42C40
2P	22 Contact, Medium-Insertion-Force IC Socket	79-42C22
4B, 4D	40 Contact, Medium-Insertion-Force IC Socket	79-42C40
5P, 5R	24 Contact, Medium-Insertion-Force IC Socket	79-42C24
	Switches	
5B, 5D, 8P	8-Station, Single-Throw, Dual-Inline-Package Bit Switch	66-118P1T
	Transistors	
Q1-Q4	Type-2N3904, 60 V, 1 W, NPN Transistor	34-2N3904
Q6, Q7	Type-2N6044 Darlington NPN Transistor	34-2N6044
	Miscellaneous	
L1-L3	100 μH Inductor *Acceptable substitute is part no. 41-3003*	141002-001
VR1	Voltage Regulator	37-7815
VR2	Voltage Regulator	37-7915
Y1	12.09 MHz Crystal	144000-001
	Test Point *Acceptable substitute is part no. 020670-01*	179051-002
	Nylon Snap-In Fastener	81-4302

NOTICE TO ALL PERSONS RECEIVING THIS DRAWING CONFIDENTIAL: Reproduction forbidden without the specific written permission of Atari, Inc., Sunnyvale, CA. This drawing is only conditionally issued, and neither receipt nor possession thereof confers or transfers any right in, or license to use, the subject matter of the drawing or any design or technical information shown thereon, nor any right to reproduce this drawing or any part thereof. Except for manufacture by vendors of Atari, Inc., and for manufacture under the corporation's written license, no right to reproduce this drawing is granted or the subject matter thereof unless by written agreement with or written permission from the corporation.

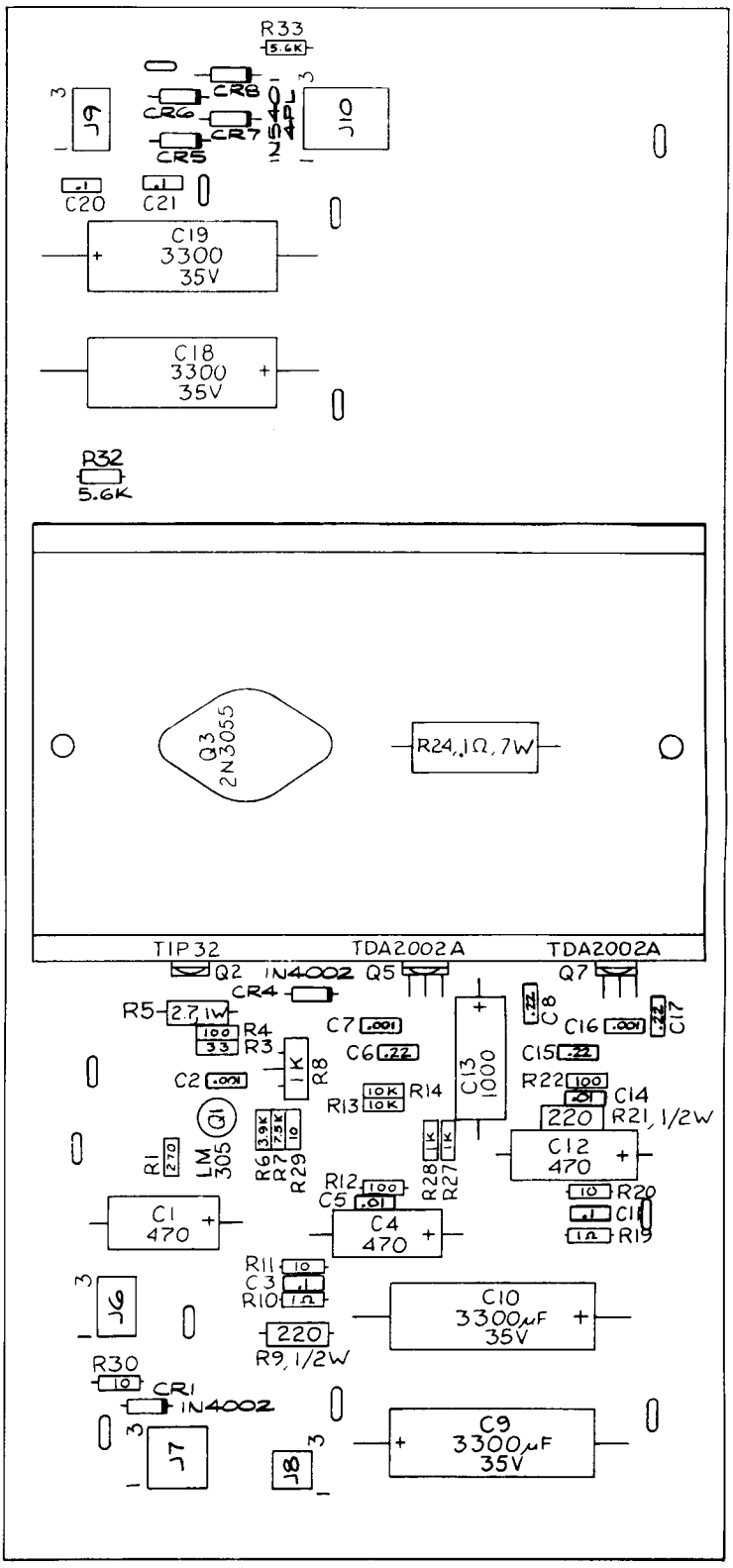

Figure 3-15 Regulator/Audio II Printed-Circuit Board Assembly A035435-04 C

Regulator/Audio II Printed-Circuit Board Assembly Parts List

Components in the following parts list are shown in Figure 3-15.

Designator	*Description*	*Part No.*
	Capacitors	
C1	470 μF, 25 V, Aluminum Electrolytic Fixed Axial-Lead Capacitor	24-250477
C2	0.001 μF, 50 V, Ceramic-Disc Axial-Lead Capacitor	122002-102
C3	0.1 μF, 50 V, Ceramic-Disc Axial-Lead Capacitor	122002-104
C4	470 μF, 25 V, Aluminum Electrolytic Fixed Axial-Lead Capacitor	24-250477
C5	0.01 μF, 25 V Minimum, Ceramic-Disc Axial-Lead Capacitor *Acceptable substitute is part no. 122005-103*	100015-103
C6	0.22 μF, 25 V, Ceramic-Disc Axial-Lead Capacitor	122004-224
C7	0.001 μF, 50 V, Ceramic-Disc Axial-Lead Capacitor	122002-102
C8	0.22 μF, 25 V, Ceramic-Disc Axial-Lead Capacitor	122004-224
C9, C10	3300 μF, 35 V, Aluminum Electrolytic Fixed Axial-Lead Capacitor	24-350338
C11	0.1 μF, 50 V, Ceramic-Disc Axial-Lead Capacitor	122002-104
C12	470 μF, 25 V, Aluminum Electrolytic Fixed Axial-Lead Capacitor	24-250477
C13	1000 μF, 25 V, Aluminum Electrolytic Fixed Axial-Lead Capacitor	24-250108
C14	0.01 μF, 25 V Minimum, Ceramic-Disc Axial-Lead Capacitor *Acceptable substitute is part no. 122005-103*	100015-103
C15	0.22 μF, 25 V, Ceramic-Disc Axial-Lead Capacitor	122004-224
C16	0.001 μF, 50 V, Ceramic-Disc Axial-Lead Capacitor	122002-102
C17	0.22 μF, 25 V, Ceramic-Disc Axial-Lead Capacitor	122004-224
C18, C19	3300 μF, 35 V, Aluminum Electrolytic Fixed Axial-Lead Capacitor	24-350338
C20, C21	0.1 μF, 50 V, Ceramic-Disc Axial-Lead Capacitor	122002-104
	Diodes	
CR1, C4	Type-1N4002, 1 A, 100 V Silicon Rectifier Diode	31-1N4002
CR5-CR8	Type-1N5401, 3 A, 100 V Silicon Rectifier Diode	31-1N5401
	Integrated Circuits	
Q1	Type-LM305, 5 V, Linear Voltage Regulator	37-LM305
Q5	Type-TDA2002A, 8 W, Linear Audio Amplifier Integrated Circuit	137151-002
Q7	Type-TDA2002A, 8 W, Linear Audio Amplifier Integrated Circuit	137151-002

(Continued on next page)

Regulator/Audio II Printed-Circuit Board Assembly Parts List, continued

Designator	*Description*	*Part No.*
	Resistors	
R1	270 Ω, ±5%, ¼ W Resistor	110000-271
R3	33 Ω, ±5%, ¼ W Resistor	110000-330
R4	100 Ω, ±5%, ¼ W Resistor	110000-101
R5	2.7 Ω, ±5%, 1 W Resistor	110009-027
R6	3.9 kΩ, ±5%, ¼ W Resistor	110000-392
R7	7.5 kΩ, ±5%, ¼ W Resistor	110000-752
R8	1 kΩ Horizontal PCB-Mounting Cermet Potentiometer *Acceptable substitute is part no. 19-315102*	119002-102
R9	220 Ω, ±5%, ½ W Resistor	110001-221
R10	1 Ω, ±5%, ¼ W Resistor	110000-010
R11	10 Ω, ±5%, ¼ W Resistor	110000-100
R12	100 Ω, ±5%, ¼ W Resistor	110000-101
R13, R14	10 kΩ, ±5%, ¼ W Resistor	110000-103
R19	1 Ω, ±5%, ¼ W Resistor	110000-010
R20	10 Ω, ±5%, ¼ W Resistor	110000-100
R21	220 Ω, ±5%, ½ W Resistor	110001-221
R22	100 Ω, ±5%, ¼ W Resistor	110000-101
R24	0.1 Ω, ±3%, 7 W Wirewound Resistor	19-100P1015
R27, R28	1 kΩ, ±5%, ¼ W Resistor	110000-102
R29, R30	10 Ω, ±5%, ¼ W Resistor	110000-100
R32, R33	5.6 kΩ, ±5%, ¼ W Resistor	110000-562
	Transistors	
Q2	Type-TIP32 PNP Power Transistor	33-TIP32
Q3	Type-2N3055 NPN Silicon Transistor	34-2N3055
	Mechanical Parts	
J6	6-Position Connector Receptacle	79-58306
J7	9-Position Connector Receptacle	79-58308
J8	4-Position Connector Receptacle	79-58354
J9	6-Position Connector Receptacle	79-58306
J10	12-Position Connector Receptacle	79-58346
Q2	#6-32 x ¼-Inch Binder-Head Nylon Screw	75-F60405
Q3	#6-32 Nut/Washer Assembly	75-99516
Q3	Thermally Conductive Silicon Insulator	78-16008
Q5	Thermally Conductive Silicon Insulator	78-16008
Q5, Q7	#6 x ⅜-Inch Cross-Recessed Pan-Head Thread-Forming Type-AB Zinc-Plated-Steel Screw	72-6606S
	Heat Sink	034531-01
	Test Point *Acceptable substitute is part no. 020670-01*	179051-001

H. Power Supply Assembly

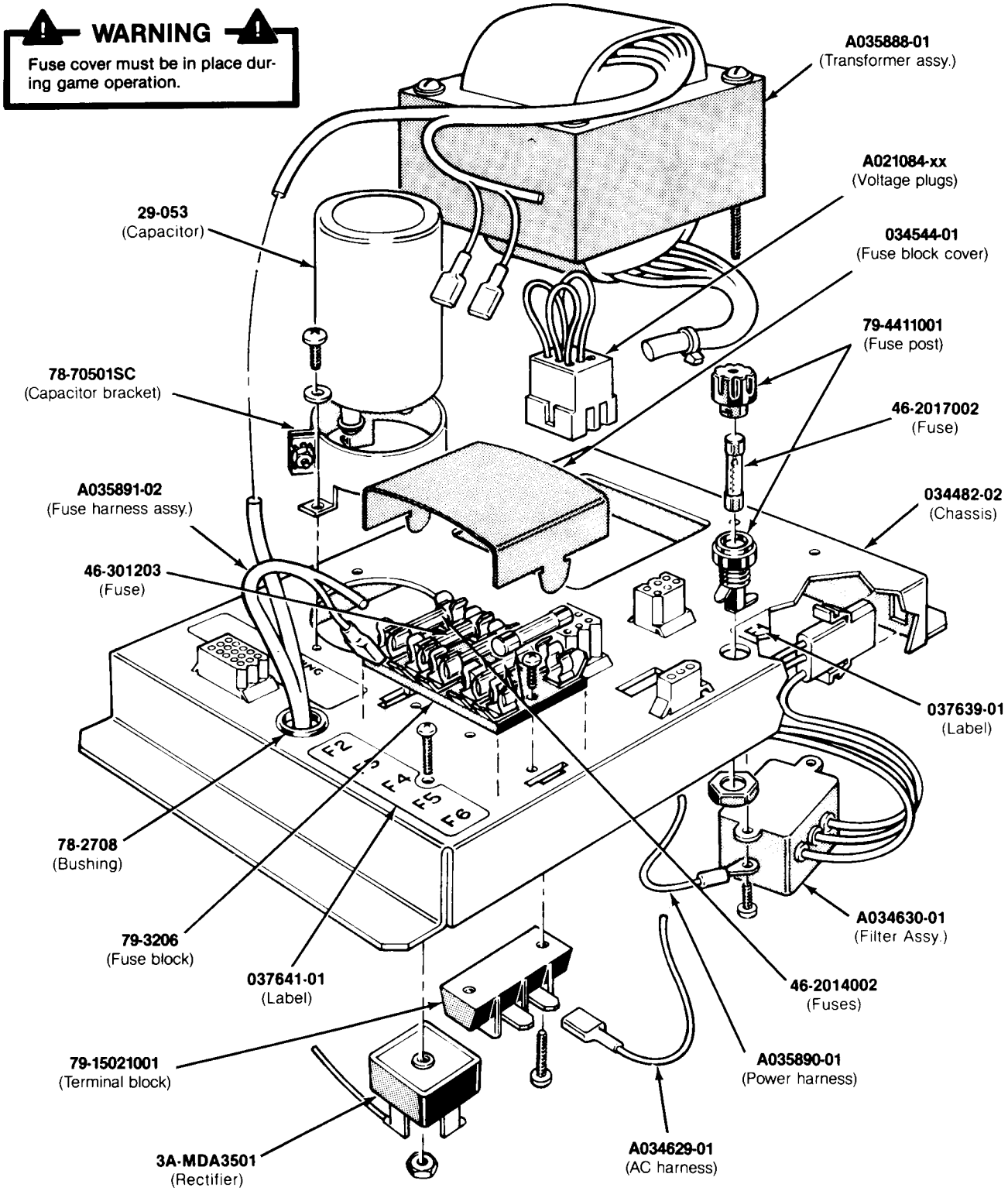

Figure 3-16 Power Supply Assembly A037671-01 & -02 E

Power Supply Assembly Parts List

Assemblies and components in the following parts list are shown in Figure 3-16.

Part No.	*Description*
A021084-01	Voltage Plug for 100 V (90–110 VAC) *(violet wire color—plugs into* **J3***)*
A021084-02	Voltage Plug for 120 V (105–135 VAC) *(yellow wire color—plugs into* **J3***)**
A021084-04	Voltage Plug for 220 V (200–240 VAC) *(blue wire color—plugs into* **J3***)*
A021084-05	Voltage Plug for 240 V (220–260 VAC) *(brown wire color—plugs into* **J3***)*
A034629-01	AC Harness Assembly **(J4A)**
A034630-01	RFI Filter Assembly **(FL1***—designation not marked)*
A035888-01	Transformer Assembly **(T1***—designation covered) (Acceptable substitute is part no. A035888-02)*
A035890-01	Power Harness Assembly **(J2)**
A035891-02	Fuse Harness Assembly **(F2–F6)**
29-053	27,000 μF, 15 VDC Electrolytic Capacitor **(C1)**
3A-MDA3501	Type-MDA 3501 Bridge Rectifier **(CR1)**
46-2014002	4 A, 250 V, 3AG Slow-Blow Glass Cartridge-Type Fuse **(F2, F4–F6)**
46-2017002	7 A, 250 V, 3AG Slow-Blow Glass Cartridge-Type Fuse **(F1)**
46-301203	20 A, 32 V, 3AG Slow-Blow Glass Cartridge-TypeFuse **(F3)**
78-2708	Nylon Type 6/6 Hole Bushing with ⅝-Inch Inside Diameter x $\frac{5}{64}$-Inch Outside Diameter x ¼-Inch Thick
78-70501SC	2-Inch Diameter Capacitor Mounting Bracket **(C1)**
79-15021001	2-Circuit Single-Row Terminal Block *(located under* **F4***)*
79-3206	5-Position 3AG Fuse Block with ¼-Inch Quick-Disconnect Terminals **(F2–F6)**
79-4411001	Panel-Mounting Non-Indicating 3AG Cartridge-Type Fuse Post **(F1)**
034482-02	Power Supply Chassis Base
034544-01	Fuse Block Cover **(F2–F6)**
037243-01	Metal Base Plate *(not shown in illustration)*
037639-01	Label for Fuse Value **(F1)**
037641-01	Label for Fuse Values **(F2–F6)**

**This is the only plug provided on the North American power supply.*

NOTE

A037671-01 power supply assembly has the 120 V plug.
A037671-02 has the 100 V, 220 V, and 240 V plugs.
A037671-03 has the 220 V and 240 V plugs.

Warranty

Seller warrants that its printed-circuit boards and parts thereon are free from defects in material and workmanship under normal use and service for a period of ninety (90) days from date of shipment. Seller warrants that its video displays (in games supplied with displays) are free from defects in material and workmanship under normal use and service for a period of thirty (30) days from date of shipment. None of the Seller's other products or parts thereof are warranted.

If the products described in this manual fail to conform to this warranty, Sellers' sole liability shall be, at its option, to repair, replace, or credit Buyer's account for such products which are returned to Seller during said warranty period, provided:

(a) Seller is promptly notified in writing upon discovery by Buyer that said products are defective;

(b) Such products are returned prepaid to Sellers' plant; and

(c) Seller's examination of said products discloses to Seller's satisfaction that such alleged defects existed and were not caused by accident, misuse, neglect, alteration, improper repair, installation or improper testing.

In no event shall Seller be liable for loss of profits, loss of use, incidental or consequential damages.

Except for any express warranty set forth in a written contract between Seller and Buyer which contract supersedes the terms of this order, this warranty is expressed in lieu of all other warranties expressed or implied, including the implied warranties of merchantability and fitness for a particular purpose, and of all other obligations or liabilities on the Seller's part, and it neither assumes nor authorizes any other person to assume for the Seller any other liabilities in connection with the sale of products under this order.

The use of any non-Atari parts may void your warranty, according to the terms of the warranty. The use of any non-Atari parts may also adversely affect the safety of your game and cause injury to yourself and others. Be very cautious in using non-Atari-supplied components with our games, in order to insure your safety.

Atari distributors are independent, being privately owned and operated. In their judgment they may sell parts or accessories other than Atari parts or accessories. Atari cannot be responsible for the quality, suitability or safety of any non-Atari part or any modification including labor which is performed by such distributor.

This document is and contains confidential trade secret information of Atari, Inc.

This document is loaned under confidential custody for the sole purpose of operation, maintenance or repair of Atari equipment and may not be used by or disclosed to any person for any other purpose whatever, and remains the property of Atari, Inc.

Neither it nor the information it contains may be reproduced, used, or disclosed to persons not having a need to know consistent with the purpose of the loan, without written consent of Atari, Inc.

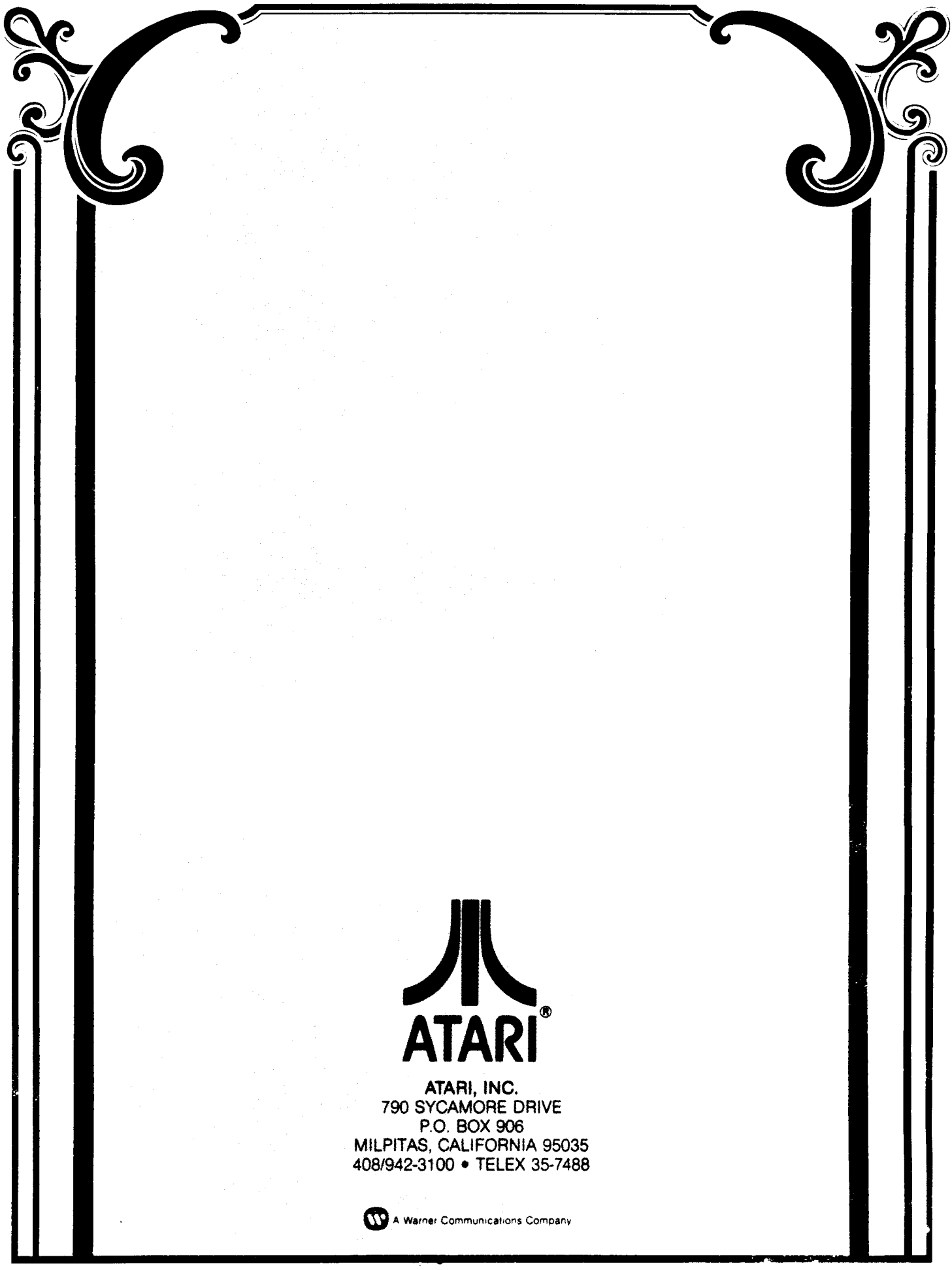

ATARI®

ATARI, INC.
790 SYCAMORE DRIVE
P.O. BOX 906
MILPITAS, CALIFORNIA 95035
408/942-3100 • TELEX 35-7488

A Warner Communications Company