
MIDWAY
MORTAL KOMBAT II
"MORTAL KOMBAT II" Copyright © 1993
Midway Manufacturing Company
31-1831



# Mortal Kombat II Instructions

— INSERT COIN(S)

— IN 2 PLAYER GAME — **LOSER PAYS**
— **WINNER STAYS**

— PRESS **PUNCH** AND **KICK** BUTTONS TO **ATTACK**

— USE **JOYSTICK** TO **MOVE**, **JUMP**, AND **DUCK**

— FIND SECRET MOVES BY USING JOYSTICK AND **BUTTON** COMBINATIONS



31-1834

982

*MIDWAY*

October 1993
16-40029-101

# MORTAL KOMBAT II



## OPERATIONS MANUAL

**Operation & Adjustments • Testing & Problem Diagnosis**
**Parts Information • Wiring Diagrams & Schematics**

# MORTAL KOMBAT II
## Instructions



*Insert Coin(s)*

*In a two player game, the loser pays and the winner stays.*

*Press the Punch and Kick buttons to attack an opponent.*

*Use the joystick to make the screen player jump or duck, and move left or right.*

*Use joystick and button combinations to discover secret moves.*

MIDWAY Manufacturing Company reserves the rights to make modifications and improvements to its products. The specifications and parts identified in this manual are subject to change without notice.

# MORTAL KOMBAT II

# TABLE OF CONTENTS

## Section 1 Operation and Troubleshooting


**Safety** ..... 1-2
**Set-up Procedure**
Installation & Inspection ..... 1-3
Location Requirements ..... 1-3
Cabinet Assembly Diagram ..... 1-4
**Servicing** ..... 1-6
**Game Features**
Starting-up ..... 1-8
Player Controls ..... 1-8
Control Panel Diagram ..... 1-8
**Game Operation**
Control Switches ..... 1-9
Control Switch Location Diagram ..... 1-9
**Menu System Operation**
Operation ..... 1-10
Main Menu ..... 1-10
Diagnostic Tests ..... 1-11
Switch Test ..... 1-11
DIP Switch Test & Table ..... 1-12
CPU & Sound Tests ..... 1-13
Monitor Patterns & Burn-in Test ..... 1-14
Coin Bookkeeping ..... 1-15
Game Audits ..... 1-16
Game Adjustments ..... 1-17
Standard Pricing Table ..... 1-19
Custom Pricing Table ..... 1-20
Utilities ..... 1-21
Volume Adjust ..... 1-22
**Troubleshooting** ..... 1-23


## Section 2 Parts Information


Cabinet Hardware, PC Boards ..... 2-2
Control Panel Assembly, Fluorescent Lamp Assembly, Speakers, Transformer Assembly ..... 2-3
Cables, Monitor, Manuals ..... 2-4
Power Supply Switcher Assembly ..... 2-5
CPU Board Assembly ..... 2-6
CPU Board Parts ..... 2-7
Memory Expansion Board Assembly ..... 2-8
Memory Expansion Board Parts ..... 2-9
Sound Board Assembly ..... 2-10
Sound Board Parts ..... 2-11


## Section 3 Diagrams and Schematics


JAMMA Chart & Interboard Wiring ..... 3-2
Cabinet Wiring Diagram ..... 3-3
Power Wiring Diagram & Transformer Chart ..... 3-4
CPU Board Schematic ..... 3-5
Memory Expansion Board Schematic ..... 3-27
Sound Board Schematic ..... 3-33
Electronic Rack Interboard Wiring Diagram ..... 3-38


© Copyright 1993 MIDWAY Manufacturing Company

# MORTAL KOMBAT II

SECTION
one

## Operation

## Safety Notices

The following safety instructions apply to all game operators and service personnel. Specific warnings and cautions will be found throughout this manual where they apply. We recommend that you read this page before preparing your game for play.

# ⚠ CAUTION

**AC POWER CONNECTION.** Before connecting the game to the AC power source, verify that the "line voltage selection chart" jumper wires are installed correctly for the line voltage in your area. For details, refer to Section 3.

**PROPERLY GROUND THE GAME.** To avoid electrical shocks, do not plug in the game until it has been inspected and properly grounded. MIDWAY games should only be plugged into a grounded 3-wire outlet. Shocks will also result, if the control panel is not properly grounded! After servicing any parts on the panel, assure that the ground wires are secure. Only then should you lock up the game.

**DISCONNECT POWER DURING REPAIRS.** To avoid electrical shock, disconnect the game from the AC power source before removing or repairing any part of the game.

**USE THE PROPER FUSE.** To avoid electrical shock, use the replacement fuse which is specified in the parts list for this game. The replacement fuse must match the original fuse in fuse type, voltage rating, and current rating.

**MONITOR PRECAUTIONS.** When removing or repairing the monitor, extra precautions must be taken to avoid electrical shock because high voltages may exist within the monitor circuitry and cathode ray tube (CRT) even after power has been disconnected. Do not touch internal parts of the monitor with your hands or metal objects! Always discharge the CRT by the following method: Attach one end of a large, well-insulated, 20-kV jumper to ground. Momentarily touch the free end of the grounded jumper to the anode by sliding it under the anode cap. Wait two minutes and discharge the anode again.

**HANDLE FLUORESCENT TUBE AND CRT WITH CARE.** If you drop a fluorescent tube or CRT and it breaks, it will implode! Shattered glass can fly eight feet or more from the implosion.

## ATTENTION !

***PROPERLY ATTACH ALL CONNECTORS.*** *Make sure that the connectors on each printed circuit board (PCB) are properly connected. If they do not slip on easily, do not force them. A reversed connector may damage your game and void the warranty. All connectors are keyed to fit specific pins on each board.*

# Setup Procedure

## INSTALLATION & INSPECTION

1. Remove all items from shipping container and set them aside. Inspect the exterior of the cabinet for any damage.

2. The keys are either taped to the coin return slot, or attached to joystick. Unlock and open the coin and cash box doors. Remove the leg levelers and spare parts which are stored in the cash box.

3. Remove the rear door of the cabinet. Inspect the interior for any signs of damage. Check all major assemblies to assure that they are mounted securely.

4. Tilt or lay the cabinet down. Locate the four threaded holes on the bottom of the cabinet (one in each corner), and install one leg leveler (with its hex nut) in each hole.

5. Stand the cabinet upright and make certain that it is in a stable position. Level the cabinet.

6. Refer to the game's Cabinet Wiring Diagram (section 3), and check to see that all cable connectors are correctly secured. DO NOT FORCE CONNECTORS. Watch for damaged connectors and avoid making reversed connections.

7. Determine the value of your line voltage with a meter. Then, check the power input wires to the main power supply transformer. Be sure they are connected to taps which correspond to your local line voltage value. If necessary, reconnect the power input wires to the transformer in accordance with the Tranformer Chart in section 3.

8. Lay the line cord (connected to the Power Chassis) in the slot along the bottom edge of the rear cabinet door. Replace the rear cabinet door. Close and lock the front coin and cash box doors.

9. Connect the line cord to a grounded (3-terminal) AC wall outlet.

10. Switch On the game, using the On/Off switch located on the upper left rear of the cabinet, to verify proper operation.

### Game Location Requirements

*Power*
Domestic 115V @ 60 Hz
Foreign 230V @ 50 Hz

*Temp.*
32° F to 100° F
(0° C to 38° C)

*Humidity*.
Not to exceed 95% relative.

### Cabinet Statistics

*Dimensions.*
Width 27"
Depth 41"
Height 73"

*Weight.*
Approx 402lbs

# Cabinet Assembly

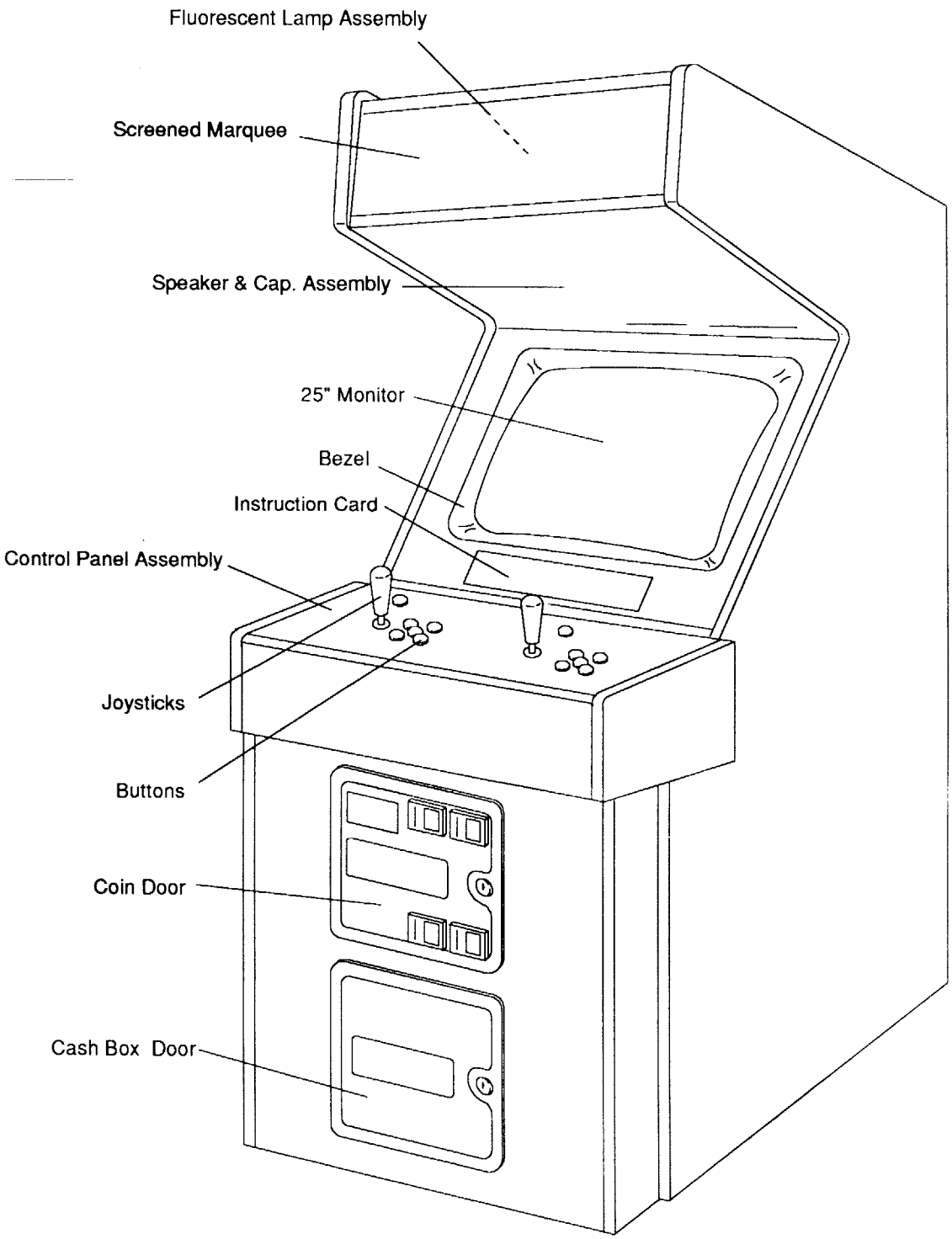


**Front View**

# Cabinet Assembly

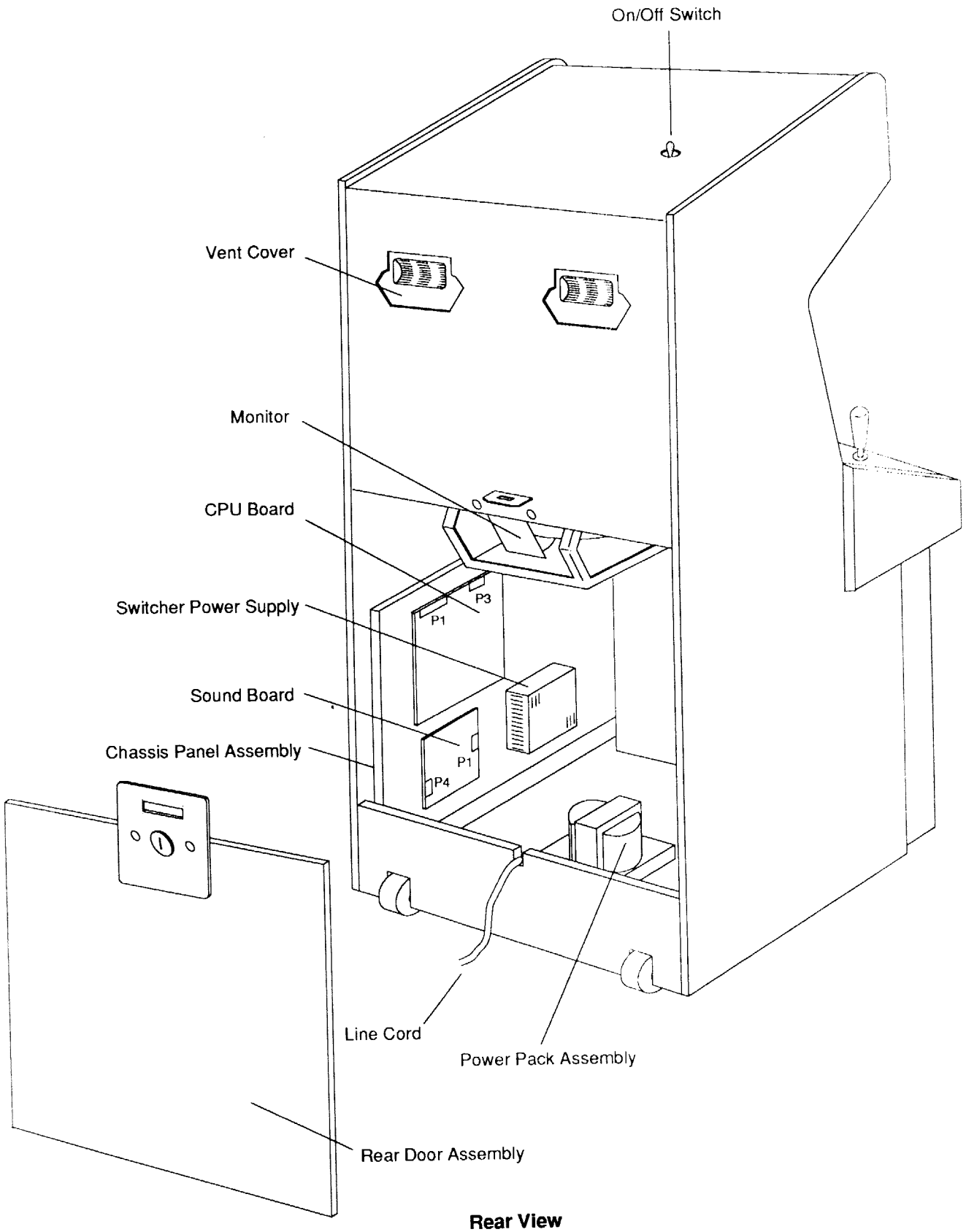


**Rear View**

# Servicing

## Servicing the Control Panel

Switch off power to the game and open the coin door. The control panel is held in place by two latches (located inside the cabinet) which provide constant pressure on the strikes. To release the latches, reach through the coin door opening toward the left and right sides of the cabinet. *Do not reach straight back through the coin door opening or you could damage the monitor control board.* Lift the latch handle and unhook the wire fasteners. Grip the joysticks and carefully tilt the control panel back on its hinge.

To return the control panel to its normal position, carefully lean it forward until it rests on the cabinet. Be careful not to let it slam down onto the cabinet, or to pinch any wires. Always reclasp the latches.

**Caution**

*The monitor DOES NOT contain an isolation transformer in its chassis (it is mounted instead in the Power Chassis Assembly located on the floor of the cabinet). When servicing the monitor on a test bench, YOU MUST ISOLATE THE MONITOR FROM THE LINE VOLTAGE WITH AN ISOLATION TRANSFORMER.*

## Removal of Viewing Glass

Switch off power to the game, and open the control panel. Remove the five hex head screws and the black metal strip at the bottom of the viewing glass. Carefully, slide the glass from its side grooves and lift it clear of the cabinet.

## Removal of Monitor Bezel

Switch off power to the game. Open the control panel and remove the viewing glass. Lift the bezel off of the monitor.

**Caution**

*While removing the four bolts, firmly support the monitor from the front of the CRT so that it will not slip.*

## Monitor Replacement

*We recommend that you read the WARNINGS section thoroughly before beginning this procedure.*

Switch off power to the game. Remove the viewing glass and the monitor bezel. Completely disconnect the monitor from all of its cabling. Remove the four bolts securing the monitor's mounting flanges to its mounting panel. Pull the monitor carefully from the cabinet front.

## Removal of the Marquee

Switch off power to the game. Remove the five hex head screws from the black strip on top of the cabinet. Remove the strip and carefully lift the marquee. Store the marquee carefully to prevent damage.

The fluorescent tube is now accessible for replacement. Remove the plastic lamp locks. Grasp the tube, give it a quarter turn, and remove it from its socket. Carefully place a new tube into the socket, and turn to reinstall.

**WARNING**

Use care in handling. If you drop a fluorescent tube and it breaks, it will implode!

## Removal of the Fluorescent Light Assembly

Switch off power to the game. Remove the marquee glass. Disconnect the fluorescent light assembly from its power cable. Remove the screws that hold the assembly to the cabinet then lift out the assembly.

## Removal of the Speakers

Switch off power to the game. Remove the marquee glass. The speakers come out from the front of the cabinet. Be sure to disconnect the cabling and remove the nuts and machine screws before attempting to remove the speakers from their enclosure. Carefully reinstall the seals upon completing any task in the speaker enclosure.

## Volume Control, Begin Test Switch, and Service Credit Switch

Open the coin door. The game's volume control and diagnostic pushbutton switches are located on a small bracket on the door. The volume is controlled by the two center buttons. Depress the Volume Up or the Volume Down button until the desired sound level is reached. The Begin Test switch, on the right, activates the game's menu system. The Service Credit switch, on the left, allows credits to be alloted for service testing without affecting the game's bookkeeping total.

## Game Features

### STARTING UP

**Note**

When an error is detected during Start-up Tests, game start-up does not progress, and an error message appears on the screen.

Switch on power to the game. A "rug" pattern appears on the CRT screen. When the "rug" pattern ends, the screen shows CHECKING SCRATCH RAMS, and then CHECKING ROMS. The next screen shows **MORTAL KOMBAT II** REVISION LEVEL, CMOS TEST OK and the COIN SETTING. The game then begins the Attract Mode.

Insert the desired amount of coins, bills or tokens. Press the appropriate Start button. Use the joysticks to select an on-screen player. Use a control panel button to lock in the selection. The game starts automatically.

## Player Controls

**Note**

Discover secret moves by using joystick and button combinations.

- **Start Buttons**
  Each player has a Start button which allows him/her to begin or continue play.

- **High Kick/High Punch Buttons**
  Allows the on-screen player to kick or punch an opponent in the upper body.

- **Low Kick/Low Punch Buttons**
  Allows the on-screen player to kick or punch an opponent in the lower body.

- **Block Buttons**
  Allows the on-screen player to block an opponent's punch, kick or special move.

- **Joystick**
  Allows the on-screen player to move, flip, jump and duck.

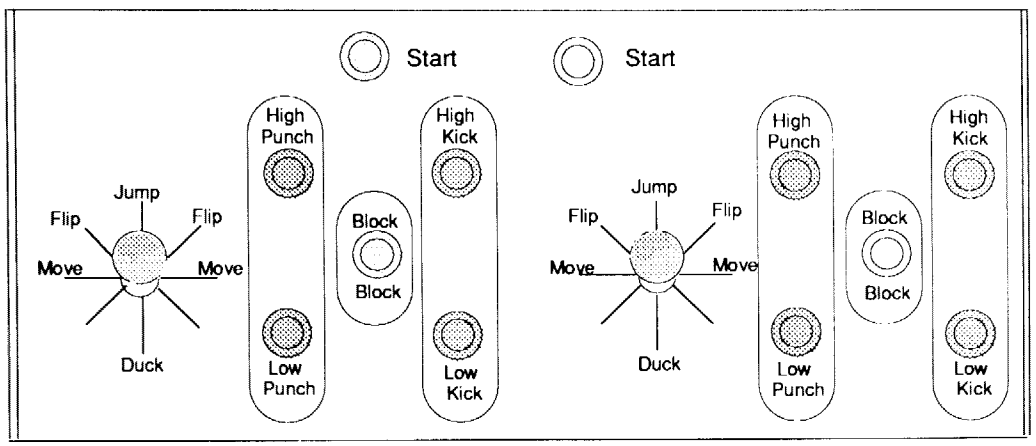


**Control Panel**

## Game Operation

The **MORTAL KOMBAT II** Control Switches are located inside the coin door.

### Control Switches

- The **Slam Tilt switch** detects any forceful vibrations against the coin door. This eliminates pounding for free games.
- The **Volume Down and Volume Up switches** increase or decrease the volume level of the music and speech. For greater profits, set your game's volume level at a nice loud setting.
- The **Begin Test switch** allows you to activate the game's menu system. Press the Begin Test switch to access the Main Menu. To exit the menu system, select EXIT TO GAME OVER from the Main Menu, then press any control panel button.
- The **Service Credit switch** is a special feature switch that allots credit without affecting the game's bookkeeping total.

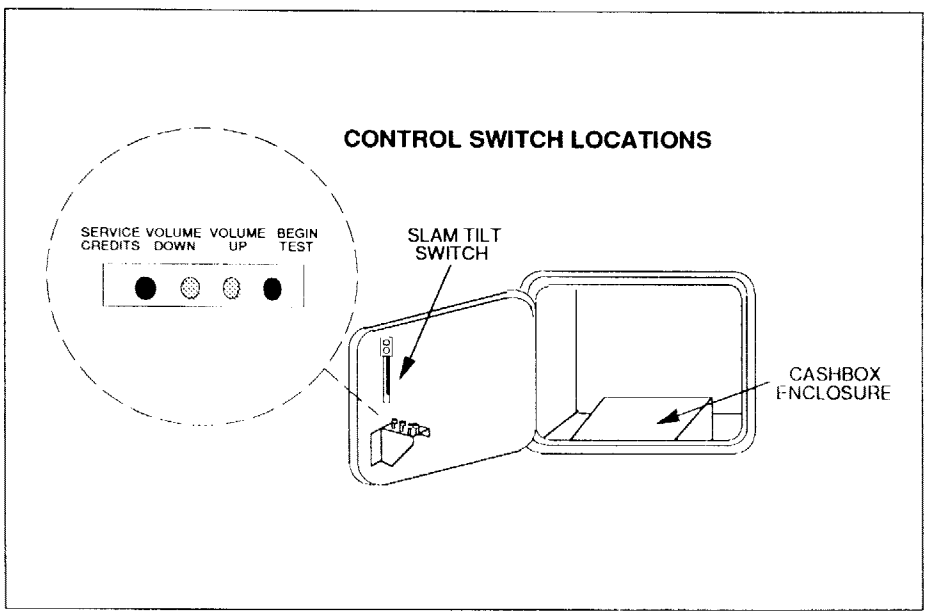

# Menu System Operation

## OPERATION

All **MORTAL KOMBAT II** Game Audits, Adjustments, and Diagnostics are options of the Main Menu. Each option in turn, has its own menu, listing several choices that you may act upon as desired.

Press the Begin Test switch on the coin door or close Switch #8 of DIP Switch Bank #2, to activate the Main Menu (shown below). Game adjustments, bookkeeping, and diagnostics are all accessible from this menu.

Move any joystick up or down to cycle through the menu options. Notice that the options are highlighted in sequence. Press any button to activate a highlighted option.
**Note:** Only highlighted options can be activated.

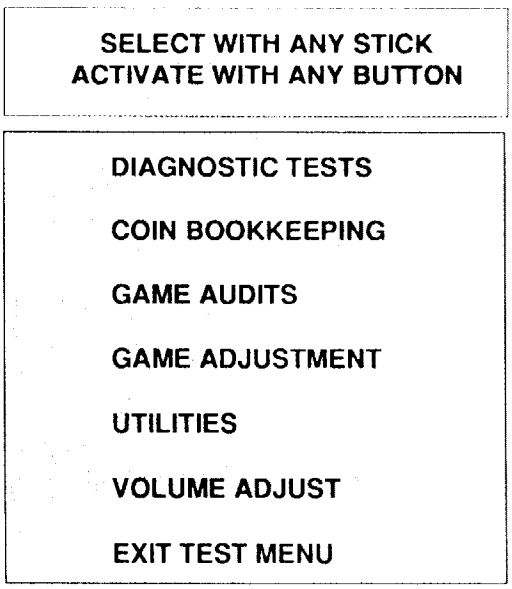


MAIN MENU

## DIAGNOSTIC TESTS

To enter the Diagnostic Tests from the Main Menu, move any joystick to select (highlight) the Diagnostic Test option and press any control panel button to activate the option.

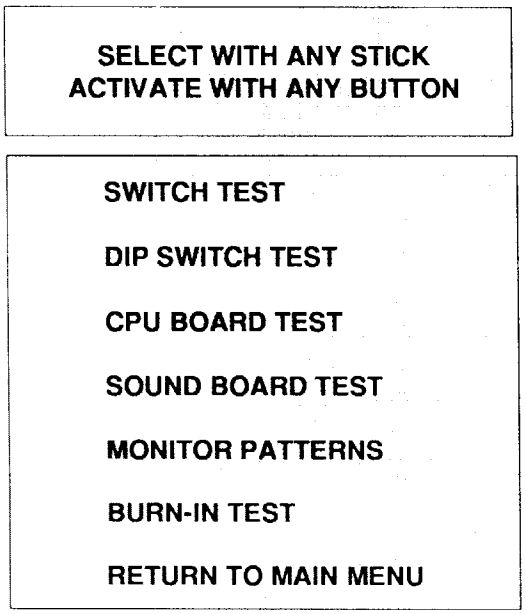


DIAGNOSTIC MENU

### Switch Test

The Switch Test allows the operator to test the switches on the control panel and the coin door.

Select the Switch Test by using any joystick to highlight the Switch Test option, then press any control panel button to activate the option.

During the Switch Test, the top of the screen shows the locations of the control panel switches. The bottom of the screen shows the locations of the coin door switches. Press a control panel switch and the switch location, on the top of the screen, lights. Press a coin door switch and the switch location, on the bottom of the screen, lights. Release the switch and the screen returns to normal.

Press the Start buttons together to return to the Diagnostic Menu.

## DIP Switch Test

The DIP Switch Test allows the operator to check the position of the two DIP Switches on the CPU Board. The operator can also change the setting of each position of each DIP Switch during this mode.

Use any joystick to select the DIP Switch Test and any control panel button to activate it. The screen displays their current settings.

To change a DIP Switch setting, press the switch to the desired setting, then check the screen to verify that the switch now shows the new setting.

Press any control panel button to return to the Diagnostic Menu.

### DIP Switch 1 Settings Table

| | SW 1 | SW 2 | SW 3 | SW 4 | SW 5 | SW 6 | SW 7 | SW 8 |
|---|---|---|---|---|---|---|---|---|
| **Violence On** | Off *<br>On | | | | | | | |
| **Blood in game** | | Off *<br>On | | | | | | |
| **Low Blow in game** | | | Off *<br>On | | | | | |
| **Attract Sounds On** | | | | Off *<br>On | | | | |
| **Comic Offer On** | | | | | Off *<br>On | | | |
| **Dollar Bill Validator**<br>Not Installed<br>Installed | | | | | | Off *<br>On | | |
| **Not Used** | | | | | | | Off *<br>On | Off *<br>On |

### DIP Switch 2 Settings Table

| | SW1 | SW2 | SW3 | SW4 | SW5 | SW6 | SW7 | SW8 |
|---|---|---|---|---|---|---|---|---|
| **Coinage**<br>DIP Switch<br>CMOS | Off *<br>On | | | | | | | |
| **Coin Settings** | | Off * | Off * | Off * | | | | |
| USA 1 Ger 1 Fr 1 | | On | Off | Off | | | | |
| USA 2 Ger 2 Fr 2 | | Off | On | Off | | | | |
| USA 3 Ger 3 Fr 3 | | On | On | Off | | | | |
| USA 4 Ger 4 Fr 4 | | Off | Off | On | | | | |
| USA ECA Ger ECA Fr ECA | | On | Off | On | | | | |
| N/U N/U N/U | | Off | On | On | | | | |
| N/U N/U N/U | | On | On | On | | | | |
| Free Play Free Play Free Play | | | | | | | | |
| **Country**<br>USA<br>German<br>French<br>Not Used | | | | | Off *<br>On<br>Off<br>On | Off *<br>Off<br>On<br>On | | |
| **One Counter**<br>**Two Counters** | | | | | | | Off *<br>On | |
| **Test Switch**<br>Game Mode<br>Test Mode | | | | | | | | Off *<br>On |

* Indicates Factory Setting

## CPU Board Test

The CPU Board Test (much like the Start-up Test) allows the operator to check the RAMs and ROMs.

Select the CPU Board Test with any joystick, then press any control panel button to activate the automatic test of the CPU Board's RAMs and ROMs.

When this test is activated a "rug" pattern appears on the screen. The screen then changes to show the layout of the RAMs and ROMs. A ROM or RAM location that is shown as black with a white outline is used and should turn either red or green. A ROM or RAM location that is shown as gray with a white outline is not used in this game. During the test ROMs or RAMs are good if they turn green and they are faulty if they turn red.

The CPU Test pauses when a bad ROM or RAM is detected. Press any button to continue the test.

## Sound Board Test

This test allows listening to some of the sounds that this game is capable of producing.

Select the Sound Board Test with any joystick, then press any control panel button to activate it. The screen displays two test options.

**GENERAL TEST** analyzes the sound circuitry. The screen shows a list of error codes. A successful test causes a single "tone" to sound. Detection of a fault causes a series of tones or no tone at all to sound.
**PLAY SOUNDS** tests synthesized & digitized sounds from the Sound Board. Advance to the next sound by pressing any action button. Press either Start button to repeat a sound.

Select RETURN TO MAIN MENU or BACK TO DIAGNOSTIC MENU. Press any control panel button to activate your selection.

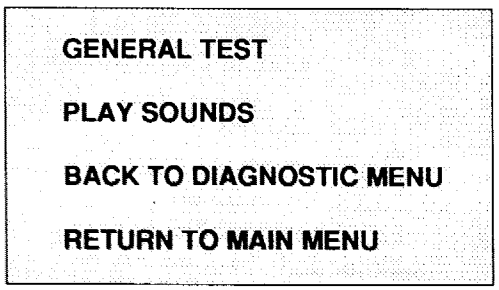


**SOUND TEST MENU**

## Monitor Patterns

The Monitor Patterns Test provides a menu for testing the monitor.

Select the test with any joystick and activate with any control panel button. Once in the Monitor Patterns Test, move any joystick to select a test option and press any control panel button to activate it. Press any control panel button again to return to the Monitor Patterns Test menu.

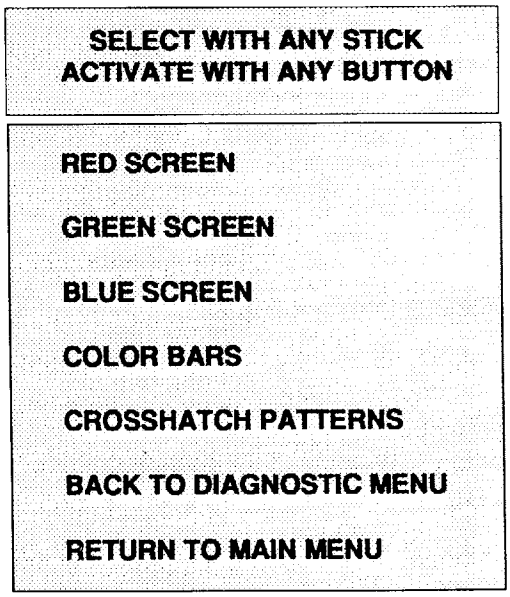


**MONITOR PATTERN MENU**

The **RED, GREEN** and **BLUE SCREEN** tests fill the screen with either red, green or blue.
The **COLOR BARS** test fills the screen with several shades of colors to help with red, green and blue level adjustments. Each color should appear sharp and clear.
The **CROSSHATCH PATTERNS** test fills the screen with a grid and a series of dots. The grid and the dots should be clear. The dots should appear round.

If any of the Monitor Pattern Tests shows a need for adjustment use the proper white knobs on the Monitor Board.

Use any joystick to select RETURN TO MAIN MENU or BACK TO DIAGNOSTIC MENU and activate with any control panel button.

## Burn-in Test

The Burn-in Test continually repeats the CPU Board Test. Move any joystick to select the Burn-in Test, then press any control panel button to activate the test. When the Burn-in Test detects an error, the test stops and displays an error message on the screen. The second page of the Audit Table specifies the number of Burn-in cycles successfully completed. Use this test to find intermittent CPU problems.

To exit this test switch the game Off then On again.

## COIN BOOKKEEPING

To enter the Coin Bookkeeping from the Main Menu, move any joystick to select the Coin Bookkeeping option, then press any control panel button to activate it.

The Coin Bookkeeping Table records the coinbox totals and game play counters. The left side of the table names the bookkeeping item and the right side shows the number of coins, credits, or plays for each item.

To exit Coin Bookkeeping, move any joystick to select RETURN TO MAIN MENU, then press any control panel button to activate it.

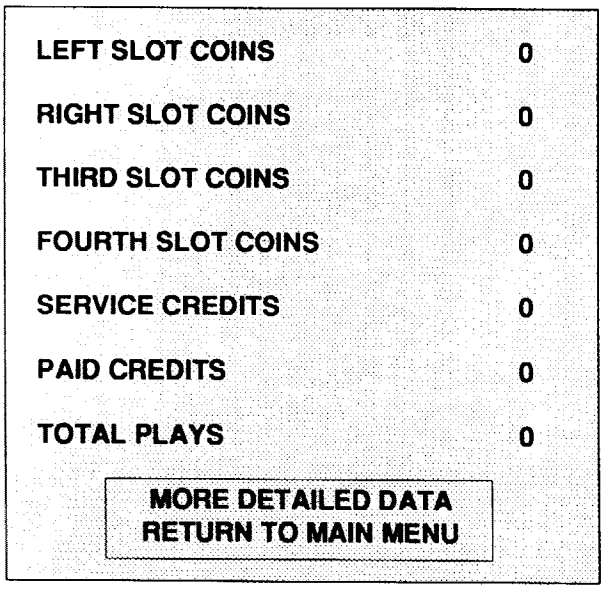


**COIN BOOKKEEPING TABLE**

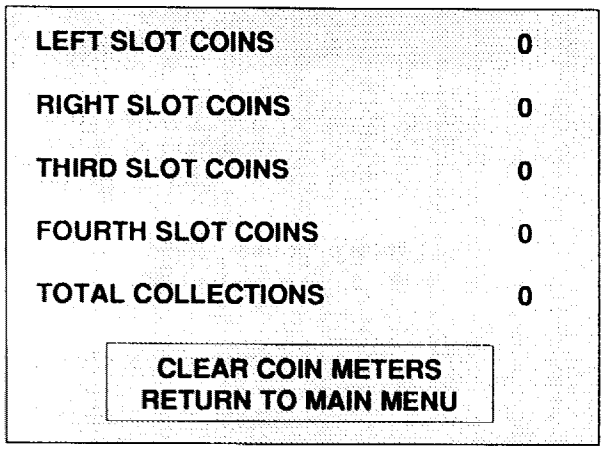


**TOTAL COLLECTION TABLE**

## GAME AUDITS

To enter Game Audits from the Main Menu, move any joystick to select the Game Audits option, then press any control panel button to activate it. To advance to the next (or return to the previous) page of the Game Audit Table, move any joystick to select either "Next Audit Page" or "Previous Audit Page", then press any control panel button to change the page.

The Game Audits Table records the game play statistics. The left side of the table names the Audit item the right side shows the amount of play.

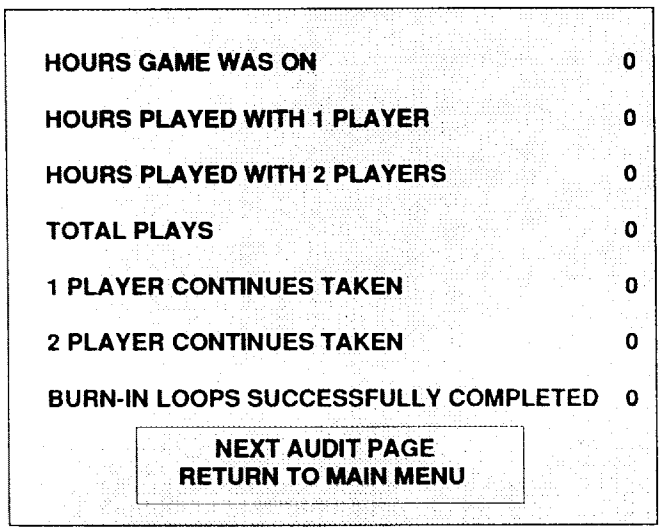


PAGE 1 OF AUDIT TABLE

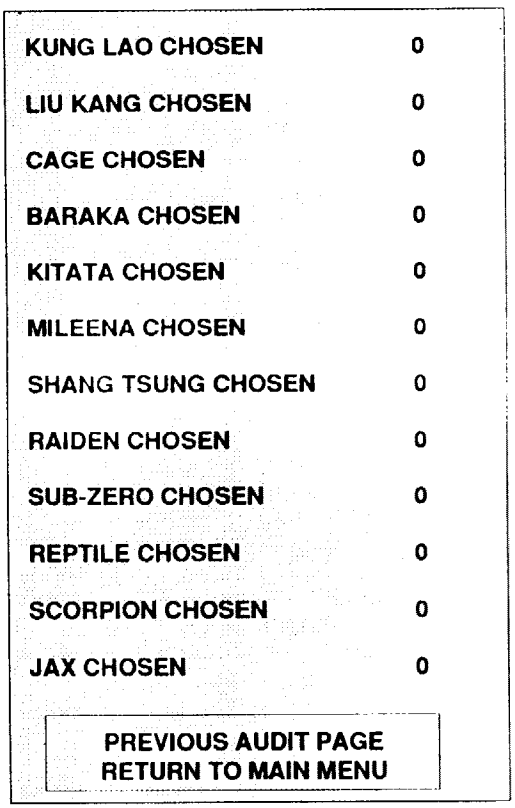


PAGE 2 OF AUDIT TABLE

To exit the Game Audit Table, move any joystick to select RETURN TO MAIN MENU, then press any control panel button to activate your selection.

## GAME ADJUSTMENTS

Move any joystick to select the Game Adjustment option on the Main Menu, then press any control panel button to activate it.

The Game Adjustments Menu allows the owner/operator to change the Game Pricing and Game Difficulty.

The Game Adjustments Menu offers several options. Each option has several choices. Move any joystick to select an option, then press any control panel button to activate that option. The next menu screen provides a setting choice. Move any joystick to modify the setting value, then press any control panel button to lock in the new value and return to the Adjustment Menu. Move the joystick up to increase the setting value, move the joystick down decrease the setting value.

To exit the Adjustments Menu, use any joystick to select RETURN TO MAIN MENU, then use any control panel button to activate your selection.

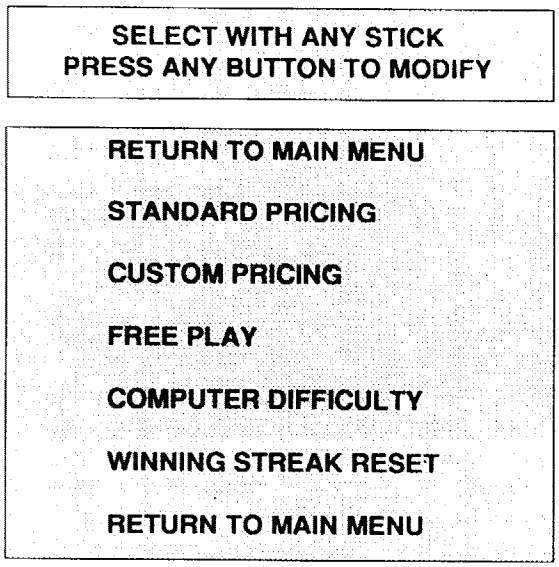


GAME ADJUSTMENT MENU

**Note**

Game Adjustments are explained in more detail on the following page.

Adjustment values set by DIP Switch, override adjustment values set by the menu system.

## Game Adjustments

**Standard Pricing**
Standard Pricing allows the operator to choose any of the "Standard" selections for the Standard Pricing Table. See page 1-19.

Modify the setting value with any joystick. Press any control panel button to lock in the new value and return to the Adjustment Menu.

**Custom Pricing**
Custom Pricing allows the operator to install pricing other than that of the Standard Pricing Table. Custom Pricing also allows the operator to select the maximum amount of credits per game, the amount of credits required to start a game, and the amount or credits required to continue a game. This option is being adjusted from the Dip Switch Settings. In order to use custom pricing, switch #1 of DIP Switch Bank #2 must be set to on. See page 1-20.

Modify the setting value with any joystick. Press any control panel button to lock in a new value and return to the Adjustment Menu.

**Free Play**
This option selects free play. The setting choices for this adjustment are:

- No (factory)
- Yes

**Computer Difficulty**
This option determines the difficulty level of game play. The setting choices for this adjustment are:

-1 (Extra Easy)
-2 (Easy)
-3 (Medium; factory)
-4 (Hard)
-5 (Extra Hard)

**Winning Streak Reset**
This option resets the highest scores after a selected amount of games are played. The setting choices for this adjustment are:

- Reset every 5,000 games.
- Reset every 10, 000 games (factory).
- Reset every 15, 000 games.
- Do Not Reset.

# Standard Pricing Table

| Name | Settings Credit/Coin | Left Chute | Center Chute | Right Chute | Fourth Chute |
|---|---|---|---|---|---|
| USA 1 | 1/25¢ (2 to Start; 2 to Continue) | 25¢ | $1.00 | 25¢ | |
| USA 2 | 1/25¢ (2 to Start; 1 to Continue) | 25¢ | $1.00 | 25¢ | |
| USA 3 | 1/25¢ (1 to Start; 1 to Continue) | 25¢ | $1.00 | 25¢ | |
| USA 4 | 1/50¢, 3/$1.00 (1 to Start; 1 to Continue) | 25¢ | $1.00 | 25¢ | |
| USA 5 | 1/50¢, 4/$1.00 (2 to Start; 1 to Continue) | 25¢ | $1.00 | 25¢ | |
| USA 6 | 1/50¢ (1 to Start; 1 to Continue) | 25¢ | $1.00 | 25¢ | |
| USA 7 | 1/50¢, 3/$1.00 (1 to Start; 1 to Continue) | 25¢ | $1.00 | 25¢ | |
| USA 8 | 1/50¢, 4/$1.00 (2 to Start; 2 to Continue) | 25¢ | $1.00 | 25¢ | |
| USA ECA | 1/25¢, 4/$1.00 (2 to Start; 2 to Continue) | $1.00 | 10¢ | 25$ | 5¢ |
| German 1 | 1/1DM, 6/5DM | 1DM | | 5DM | |
| German 2 | 1/1DM, 7/5DM | 1DM | | 5DM | |
| German 3 | 1/1DM, 8/5DM | 1DM | | 5DM | |
| German 4 | 1/1DM, 5/5DM | 1DM | | 5DM | |
| German 5 | 1/1DM, 6/5DM | 1DM | | 5DM | |
| German ECA | 1/1DM, 2/2DM, 6/5DM | 5DM | 1DM | 2DM | |
| France 1 | 2/5F, 5/10F | 5F | | 10F | |
| France 2 | 2/5F, 4/10F | 5F | | 10F | |
| France 3 | 1/5F, 3/10F | 5F | | 10F | |
| France 4 | 1/5F, 2/10F | 5F | | 10F | |
| France 5 | 2/5F, 5/10F, 11/2 x 10F | 5F | | 10F | |
| France 6 | 2/5F, 4/10F, 9/2 x 10F | 5F | | 10F | |
| France 7 | 1/5F, 3/10F, 7/2 x 10F | 5F | | 10F | |
| France 8 | 1/5F, 2/10F, 5/2 x 10F | 5F | | 10F | |
| France 9 | 1/3 x 1F, 2/5F | 1F | | 5F | |
| France 10 | 1/2 x 1F, 3/5F | 1F | | 5F | |
| France 11 | 1/3 x 1F, 2/5F, 5/2 x 5F | 1F | | 5F | |
| France 12 | 1/2 x 1F, 3/5F, 7/2 x 5F | 1F | | 5F | |
| France ECA | 1/3 X 1F, 2/5F, 5/2 X 5F | 1F | 10F | 5F | |
| Canada | 1/2 x 25¢, 3/$1.00 | 25¢ | | $1.00 | |
| Swiss 1 | 1/1F, 6/5F | 1F | | 5F | |
| Swiss 2 | 1/1F, 7/5F | 1F | | 5F | |
| Swiss 3 | 1/1F, 8/5F | 1F | | 5F | |
| Italy | 1/500 lire | 500 lire | | 500 lire | |
| UK 1 | 1/20P, 3/50P | 20P | | 50P | |
| UK 2 | 2/20P, 5/50P | 20P | | 50P | |
| UK ECA | 1/20P, 3/50 P, 7/£1.00 | £1.00 | 20P | 50P | 10P |
| UK Elec w/CCU | 1/30P, 2/50P, 4/£1.00 | £1.00 | | CCU | |
| Spain 1 | 1/100 peseta, 6/500 peseta | 100 peseta | | 500 peseta | |
| Spain 2 | 1/100 peseta, 5/500 peseta | 100 peseta | | 500 peseta | |
| Australia 1 | 1/3 x 20¢, 2/$1.00 | 20¢ | | $1.00 | |
| Australia 2 | 1/5 x 20¢, 1/$1.00 | 20¢ | | $1.00 | |
| Japan 1 | 1/100 yen | 100 yen | | 100 yen | |
| Japan 2 | 2/100 yen | 100 yen | | 100 yen | |
| Austria 1 | 1/5 schilling, 2/10 schilling | 5 schilling | | 10 schilling | |
| Austria 2 | 1/2 x 5 schilling, 3/2 x 10 schilling | 5 schilling | | 10 schilling | |
| Belgium 1 | 1/20F | 20F | | 20F | |
| Belgium 2 | 3/20F | 20F | | 20F | |
| Belgium 3 | 2/20F | 20F | | 20F | |
| Belgium ECA | 1/20F | 50F | 5F | 20F | |
| Sweden | 1/3 x 1 krona, 2/5 krona | 1 krona | | 5 krona | |
| New Zealand 1 | 1/3 x 20¢ | 20¢ | | 20¢ | |
| New Zealand 2 | 1/2 x 20¢ | 20¢ | | 20¢ | |
| Netherlands | 1/1HFI, 3/2.5HFI | 1HFI | | 2.5HFI | |
| Finland | 1/1 markka | 1 markka | | 1 markka | |
| Norway | 1/2 x 1 krone, 3/5 x 1 krone | 1 krone | | 1 krone | |
| Denmark | 1/2 x 1 krone, 3/5 krone, 7/2 x 5 krone | 1 krone | | 5 krone | |
| Antillies | 1/25¢, 4/1 guilder | 25¢ | | 1 guilder | |
| Hungary | 1/2 x 10 forint, 3/2 x 20 forint | 10 forint | | 20 forint | |

If option desired is not shown above, use Custom pricing.

## Custom Pricing

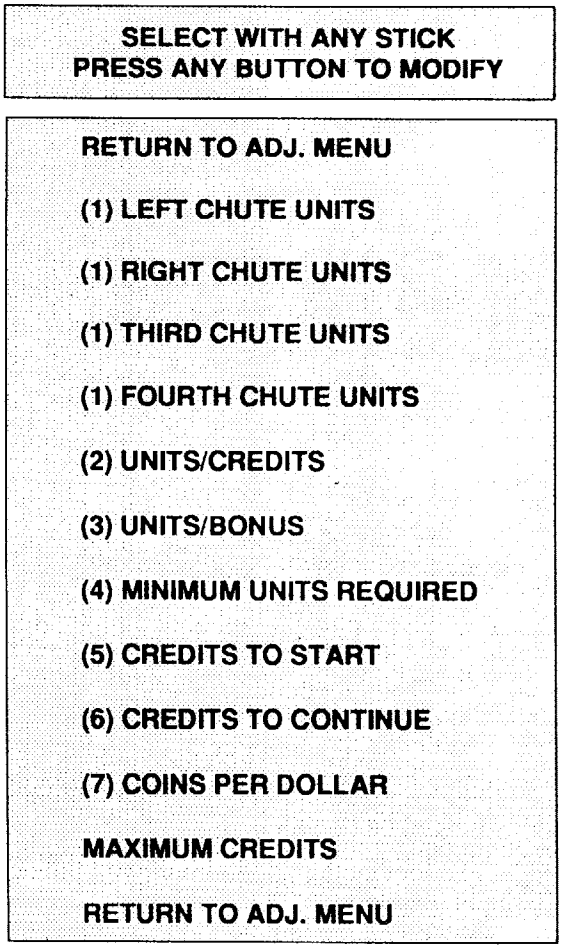


(1) Coins inserted accumulate units. This adjustment specfies the number of units given for each coin in the fourth chute (see "units/credit").

(2) This is the number of coin units required to buy one credit.

(3) One bonus credit is awarded after this many coin units have accumulated.

(4) No credits will be awarded until this many coin units have accumulated.

(5) Each player needs this many credits to begin a game.

(6) Each player needs this many credits to continue a game.

(7) The detailed bookkeeping screen shows total collections based on this many coins per dollar. (Set to zero to disable the display of money totals.)

(8) This is the limit for the credits counter. Additional coins inserted will be lost (factory setting: 30).

## UTILITIES

Move any joystick to select the Utilities option on the Main Menu, then press any control panel button to activate it.

The Utilities Menu allows the owner/operator to clear the game's bookkeeping memory and to install a custom message.

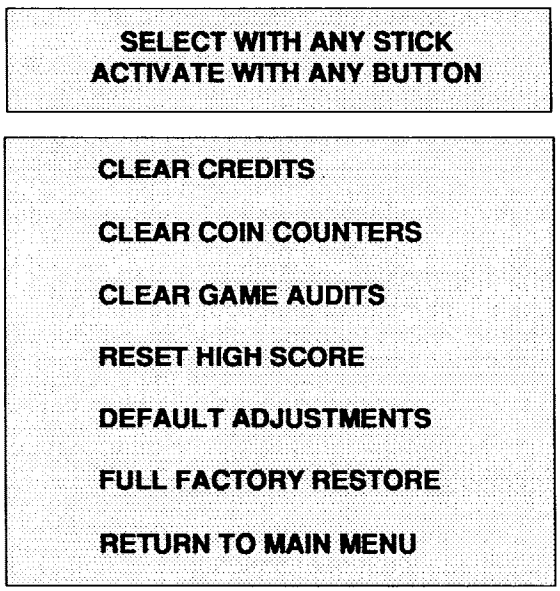


**UTILITIES MENU**

Move any joystick to select an item from the Utilities Menu, then press any control panel button to activate that item. After an item has been activated, you are given the option of resetting it or not.

For example:

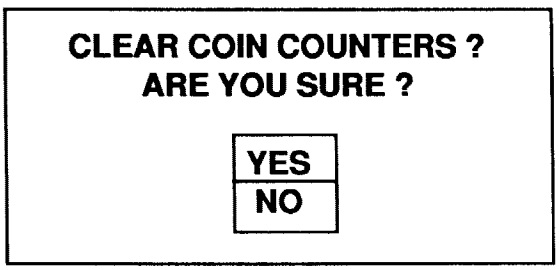


Move any joystick to choose YES or NO, then press any control panel button to lock in your choice and to return to the Utilities Menu.

To exit the Utilities Menu, move any joystick to select RETURN TO MAIN MENU, then press any control panel button to activate your selection.

## VOLUME ADJUST

Move any joystick to select the Volume Adjust option on the Main Menu, then press any control panel button to activate it.

The Volume Adjust allows the operator to control the audio level of the game.

Use any joystick, or the volume buttons, to adjust the volume to the desired level. The scale on the screen shows the volume level.

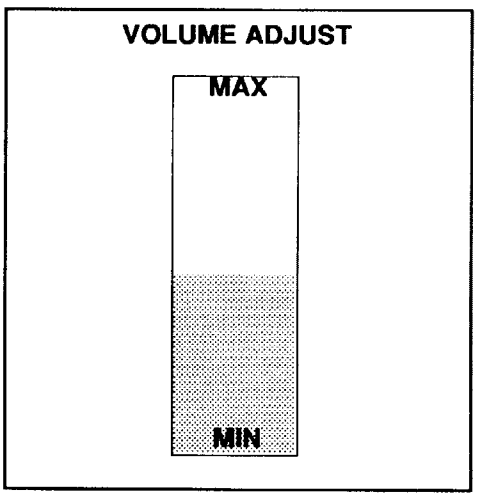


Press any button to return to the Main Menu.

# Troubleshooting

| Problem | Possible Solution |
|---|---|
| No Picture or Distorted Picture. | Check for faulty video board or monitor. Check for disconnected video signal cable. |
| Turn game On and nothing happens. | Check line fuse. Check for +5Vdc at pins C, D, 3, and 4 of the JAMMA Connector. |
| No sound. | Check the speaker and speaker connection to pins L and 10 on the JAMMA Connector. Check volume control setting. Check for +12V dc at pins F and 6 on the JAMMA Connector. Check interboard wiring from CPU Board to the Sound Board. Also, check for -5V. |
| No General Illumination. | Check the 1A., S.B. fuse. |
| Move joystick and the screen player does not move. | Check for open wires between the joystick and CPU Board. Check for contamination on joystick switch contacts and CPU Board pins. Check for proper ground. |
| Press Start Button and nothing happens. | Check for open wires between the button and CPU Board. Check for contamination on CPU Board pins or the button switch blade contacts. Check for proper ground. |
| Press any control panel button and screen player does not move. | Check for open wires between the button and CPU Board. Check for contamination on CPU Board pins or the button switch blade contacts. Check for proper ground. |
| No credit given when coins are inserted. | Check DIP switch coin setting. Check for contamination on coin switch contacts. Check for an open wire between Coin Switch 1 and pin 16 on the JAMMA Connector or Coin Switch 2 and pin T of the JAMMA Connector. |
| Too many credits for number of coins inserted. | Check Game Pricing setting. Check for a short between pins T & 16 on the JAMMA Connector. |
| Game stays in test mode. | Check that the test switch on the DIP Switch is set to Off. |

*NOTES*

# MORTAL KOMBAT II

SECTION
two

## Parts

## Cabinet Hardware

| | |
|---|---|
| Rear Door Assembly | A-16472-1 |
| Lock Retainer Plate | 01-7264 |
| Upper Door Lack Cam | 01-8989 |
| Lock Plate | 01-11285 |
| Door Bracket | 01-11291 |
| 20" Vent Hole Cover | 03-7602 |
| Door Cam Lock | 20-6542-TB |
| Cabinet Assembly | A-16971-40029 |
| Leg Leveler Plate | 01-9155 |
| Shaft Caster | 02-4404 |
| Leg Adjuster, 3.0" | 08-7377 |
| Caster Wheel | 20-9627 |
| Power Switch Plate Assembly | A-15924 |
| Power Switch | 5640-13250-00 |
| Bezel & Instruction Card Set | A-17454-1 |
| 25" CRT Bezel | 03-8497 |
| Instruction Card | 31-1834 |
| Coin Door Assembly | 09-50000-33 |
| Bill Validator Cable | H-17438-2 |
| Coin Meter with Diode | 5580-13476-00 |
| Glass Retainer Bracket | 01-9607 |
| 20" Vent Hole Cover | 03-7602 |
| Lamp Lock | 03-8327 |
| Glass Edge Channel | 03-8358 |
| Clear Glass | 08-7456-4 |
| Clear Glass | 08-7456-10 |
| TAG Special Wrench | 16-9074 |
| Toggle Latch | 20-9347 |
| Long Arm Key T-20 | 20-9620 |
| #555 Bulb, 6.3V | 24-8768 |
| Marquee | 31-1830 |
| Marquee Retainer | 03-8252-2 |

## PC Boards

***Always Replace PC Boards Exactly As Shown On Page 3-38.***

| | |
|---|---|
| Electronic Rack | A-17296-2 |
| Power Supply | A-15202-1 |
| T-Unit 2 CPU w/ Memory Expansion | A-17266-40029 |
| DCS Sound Board | A-17319-40029 |

## Control Panel

| | |
|---|---|
| Housing & Control Panel Assembly | A-17293-2 |
| Control Panel Assembly | A-17294-40029 |
| Plate | A-17430 |
| Control Panel Cable | H-17295-2 |
| Security Latch Bracket | 01-11955 |
| Con. Panel Latch Brkt. | 01-11996 |
| Clear Overlay | 03-9011 |
| Red Pushbutton | 20-9687-1 |
| White Pushbutton | 20-9687-2 |
| Blue Pushbutton | 20-9687-3 |
| 8-way Joystick | 20-9694-1 |
| Screened Overlay | 31-1828 |
| Housing w/hinge | A-17429-40029 |
| Toggle Latch | 20-9347 |

## Fluorescent Lamp Assembly

| | |
|---|---|
| Fluorescent Housing & Bracket | A-15890 |
| Fluorescent Lamp Cable | H-16303 |
| Starter | 20-8748-1 |
| Ballast | 20-8749-8 |
| Lamp Holders | 20-9788 |
| Starter Socket | 20-9789 |
| 18" Fluorescent Bulb, 15W | 24-8809 |

## Speakers

| | |
|---|---|
| Speaker & Cap Assembly | A-14968 |
| Speaker Cable | H-17352 |
| Piezo Speaker Cable | H-17433 |
| Speaker Grille | 01-11859 |
| Cap. 10µf, non-pol, 50V,20% | 5045-12914-00 |
| Tweeter Speaker, 4Ω, 15W | 5555-12924-00 |
| 6" Speaker, 4Ω, 25W | 5555-12929-00 |

## Transformer Assembly

| | |
|---|---|
| Power Pack Assembly | A-15916 |
| Power Pack Chassis Assy | A-15915 |
| Line Cord Assembly | A-15921 |
| Power Pack Jumper Cable | H-13265 |
| Transformer Jumper Cable | H-13378 |
| Line Filter Jumper Cable | H-15922 |
| G.I. Jumper Cable | H-15945 |
| Varistor, 130V, 10J | 5017-09044-00 |
| Line Filter, 5 Amp | 5102-10310-00 |
| Power Transformer | 5610-13326-00 |
| Fuse, SB, 1A, 250V | 5731-06569-00 |
| Fuse, SB, 3A, 250V | 5731-10356-00 |
| Fuse Holder, Panel | 5733-12869-00 |

## Cables

| | |
|---|---|
| Power Pack Jumper | H-13265 |
| Transformer Jumper | H-13378 |
| AC "Y" Cable | H-14004 |
| Switch Power Cable | H-15203 |
| Line Filter Jumper Cable | H-15922 |
| G.I. Jumper Cable | H-15945 |
| Fluorescent Lamp Cable | H-16303 |
| Dixie Narco Cable | H-17019 |
| Control Panel Cable | H-17295-2 |
| Main Harness Cable | H-17297-2 |
| Speaker Cable | H-17352 |
| Piezo Cable | H-17433 |
| Bill Validator Cable | H-17438-2 |
| Sound Power Speaker Cable | H-17442-2 |
| Line Voltage Cable | H-17507-2 |
| 20-pin Ribbon Cable | 5795-10937-18 |

## Monitor

| | |
|---|---|
| Monitor Support Bracket | 01-10819 |
| 25" Monitor | 5675-12787-04 |

## Manuals

| | |
|---|---|
| Instruction Manual | 16-40029-101 |
| DBV Installation Instructions | 16-9637 |

# A-15202-1
# Power Supply Switcher Assembly

| Part Number | Description |
|---|---|
| H-15203 | Switch Power Cable |
| 01-10500 | Mounting Bracket |
| 01-10573 | Shield |
| 20-9920 | P/S Switcher Supply |

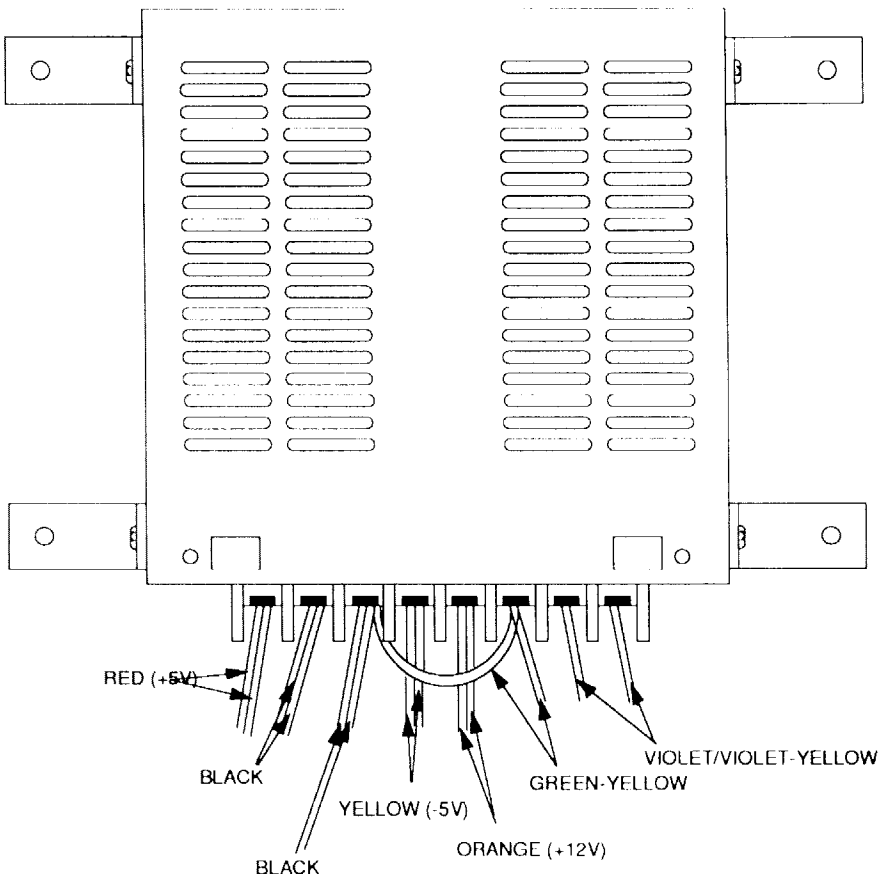


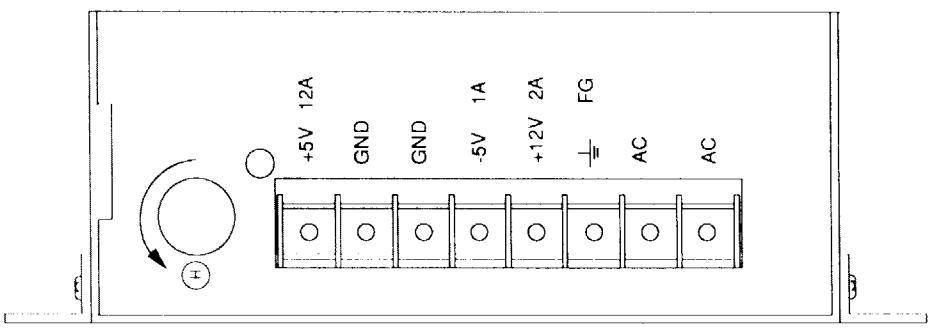

# A-17265-40029
# CPU Board Assembly

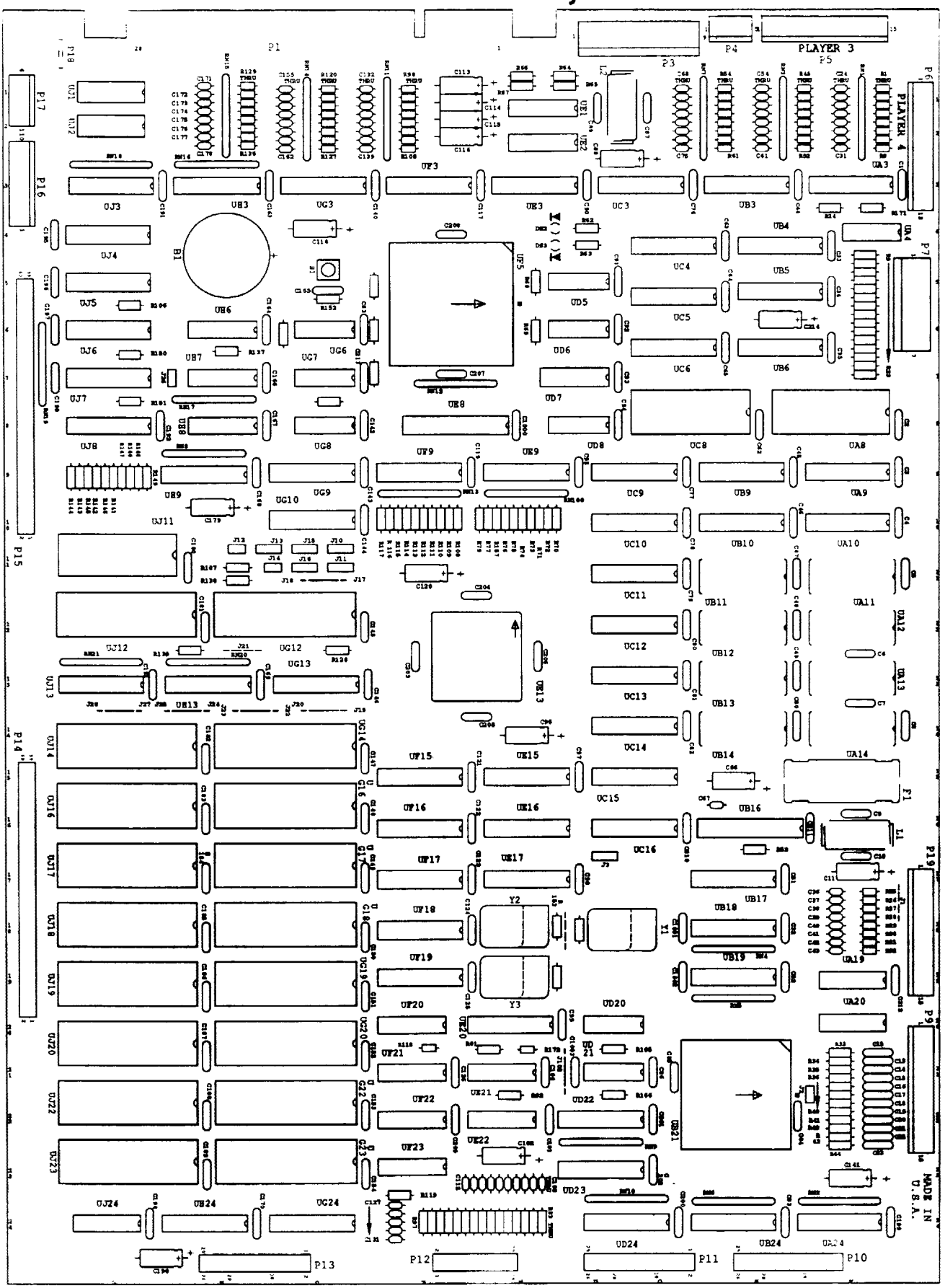

# A-17265-40029
# CPU Board Parts

| Part Number | Part Designator | Description |
|---|---|---|
| 5434-12255-00 | UH6 | IC, MAX691 |
| 5370-12602-00 | UE1 | IC, ULN2064 |
| 5340-12958-00 | UE22, UF22, UF23 | IC, 26LS31 |
| 5340-12959-00 | UE21, UF20, UF21 | IC, 26LS32A |
| 5340-13020-00 | UJ4, UJ5, UJ6, UJ7 | IC, 44C256 |
| 5340-12558-00 | UJ11 | IC, 5565 |
| 5340-13322-00 | UA8, UC8 | IC, 5C2568 |
| 5283-10551-00 | UG8 | IC, 74F00 |
| 5283-10552-00 | UD6 | IC, 74F04 |
| 5281-09215-00 | UD8 | IC, 74LS04 |
| 5280-09309-00 | UA4 | IC, 7407 |
| 5283-12488-00 | UG6 | IC, 74F08 |
| 5281-09500-00 | UD20 | IC, 74LS32 |
| 5321-13466-00 | UD21 | IC, 74AC74 |
| 5281-09737-00 | UD5 | IC, 74LS86 |
| 5281-09745-00 | UH8 | IC, 74LS138 |
| 5281-13438-00 | UH7 | IC, 74LS155A |
| 5281-09733-00 | UE2 | IC, 74LS174 |
| 5320-13437-00 | UD22 | IC, 74ACTQ244 |
| 5283-12890-00 | UB24, UD23 | IC, 74F244 |
| 5281-09867-00 | UG9 | IC, 74LS244 |
| 5320-13436-00 | UB18, UB19 | IC, 74ACTQ245 |
| 5317-12208-00 | UB6, UC6, UC11, UC12, UC13, UC14, UE15, UE16, UF15, UF16, UH9, UH13, UJ8, UJ13 | IC, 74ALS245 |
| 5283-12889-00 | UA24, UD24 | IC, 74F245 |
| 5283-13319-00 | UD7 | IC, 74F253 |
| 5283-13320-00 | UB9, UF9, UF18, UG10 | IC, 74F373 |
| 5281-09486-00 | UA9, UA10, UB5, UB10, UC5, UC9, UC10, UC15, UC16, UE17, UE20, UF19, UG13 | IC, 74LS374 |
| 5317-12211-00 | UB4, UC4 | IC, 74ALS541 |
| 5315-13435-00 | UA3, UB3, UC3, UE3, UF3, UG3 | IC, 74HCT541 |
| 5281-12887-00 | UE9, UH3, UJ3 | 74LS541 |
| 5521-13424-03 | UE19 | 8MHz Oscillator |
| 5521-13424-01 | UD18 | 50MHz Oscillator |
| 5645-09025-00 | SW1, SW2 | DIP, 8-switch |
| 5010-13364-00 | R70-R77, R79, R106, R108-R117, R140-R147, R149, R150 | 33 Ω Res. 5%, 1/8W |
| 5010-13363-00 | R24, R69, R82-R97, R119, R128, R137, R148, R151, R171 | 100 Ω Res. 5%, 1/8W |
| 5010-13372-00 | R81 | 220 Ω Res. 5%, 1/8W |
| 5010-13371-00 | R62, R63, R66, R67 | 330 Ω Res. 5%, 1/8W |
| 5010-13366-00 | R45-R51, R54, R57, R58, R98-R105, R118, R120-R127, R129-R136, R172 | 470 Ω Res. 5%, 1/8W |
| 5010-13361-00 | R13, R14, R19 | 1K Ω Res. 2%, 1/8W |
| 5010-13362-00 | R12, R15, R20 | 2K Ω Res. 2%, 1/8W |
| 5010-13368-00 | R11, R16, R21 | 3.9K Ω Res. 5%, 1/8W |
| 5010-13365-00 | R53, R107, R138, R139, R152, R157, R165, R166 | 4.7K Ω Res. 5%, 1/8W |
| 5010-13369-00 | R10, R17, R22 | 8.2K Ω Res. 5%, 1/8W |
| 5010-13370-00 | R9, R18, R23 | 15K Ω Res. 5%, 1/8W |
| 5019-09362-00 | RN1-RN3, RN6, RN7,RN9-RN12, RN14-RN18,RN100 | 4.7K Ω Res SIP, 5%, 1/8W |
| 5048-11030-00 | C165 | 470pF Cap., 10% |
| 5048-13375-00 | C54-C60, C67, C68 C71, C72, C103-C112, C127-C139, C155-C162, C171-C178 | 100pF Cap.,10% |
| 5048-11031-00 | C87, C89 | .001uF Cap., 10% |
| 5043-08980-00 | C1-C4, C9, C10, C32-C35,.C44-C46, C51-C53, C62-C65, C76-C86, C90-C95, C97-C101, C117, C119, C121-C126, C140, C142-C154, C163, C164, C166-C170, C180-C189, C191-C194, C199-C213, C1000 | .01uF Cap., |
| 5043-08996-00 | C5-C8, C47-C50, C195-C198,C1001-C1003 | .1uF Cap., 20% |
| 5040-09343-00 | C11, C66, C88, C96, C102, C115, C116, C118, C120, C141, C179, C190, C214 | 10uF Cap., 20V |
| 5671-13732-00 | DS2, DS3 | LED, Red |
| 5551-09822-00 | L2 | 4.7uH Coil, 3.0A |
| 5880-11056-00 | B1 | Battery, Lithium 3.0V |
| 5881-12315-00 | B1 | Battery Holder |
| 5700-09915-00 | UF17 | 20-pin Socket |
| 5700-12047-00 | UE8 | 24-pin Socket |
| 5700-12088-00 | UG12, UG14, UG16-UG20, UG22, UG23, UJ12, UJ14, UJ16-UJ20, UJ22, UJ23 | 32-pin Socket |
| 5700-12253-00 | UB21 | 68-pin Socket |
| 5700-12424-00 | UF5 | 84-pin Socket |
| 5791-12461-05 | P4 | 5-pin Header |
| 5791-12461-06 | P17 | 6-pin Header |
| 5791-12461-10 | P16 | 10-pin Header |
| 5791-12461-15 | P5 | 15-pin Header |
| 5791-10862-07 | P7 | 7-pin Header |
| 5791-10862-09 | P3 | 9-pin Header |
| 5791-09437-00 | P12 | 20-pin Header |
| 5019-09669-00 | RN4, RN5, RN13 | 1K Ω Res. 5%, 1/8W |
| 5010-13472-00 | J100, J101 | 47 Ω Res. 5%, 1/8W |
| 5010-13473-00 | R155 | 39 Ω Res. 5%, 1/8W |
| 5010-13474-00 | R158, R167-R170 | 68 Ω Res. 5%, 1/8W |
| 5641-12551-00 | S1 | Sw-Push Button |
| 5283-12489-00 | UG7 | IC, 74F32 |
| 5796-13836-00 | P14, P15 | 60-pin Connector |
| 5010-09534-00 | J18, J19, J22, J24, J28, R154 | 0 Ω Res. Jumper |
| 5400-12220-00 | UB21 | IC, TMS34010-50 |
| A-16217 | UE8 | IC, 20L8 |
| 5410-13816-00 | UF5 | IC, 1020A-1 |
| A-17480 | UF17 | IC, 16L8 |
| A-5343-40029-18 | UG12 | EPROM |
| A-5343-40029-1 | UG14 | EPROM |
| A-5343-40029-5 | UG16 | EPROM |
| A-5343-40029-9 | UG17 | EPROM |
| A-5343-40029-13 | UG18 | EPROM |
| A-5343-40029-3 | UG19 | EPROM |
| A-5343-40029-7 | UG20 | EPROM |
| A-5343-40029-11 | UG22 | EPROM |
| A-5343-40029-15 | UG23 | EPROM |
| A-5343-40029-17 | UJ12 | EPROM |
| A-5343-40029-2 | UJ14 | EPROM |
| A-5343-40029-6 | UJ16 | EPROM |
| A-5343-40029-10 | UJ17 | EPROM |
| A-5343-40029-14 | UJ18 | EPROM |
| A-5343-40029-4 | UJ19 | EPROM |
| A-5343-40029-8 | UJ20 | EPROM |
| A-5343-40029-12 | UJ22 | EPROM |
| A-5343-40029-16 | UJ23 | EPROM |
| 5410-12862-00 | UE13 | IC, DMA2 |
| 5340-13321-00 | UA11-UA14, UB11-UB14 | IC, 48121, 80nsec |

Notes: 1. See Section 3 For Schematic; .2 * = Not for individual sale.

# A-17264-40029
# Memory Expansion Board Assembly

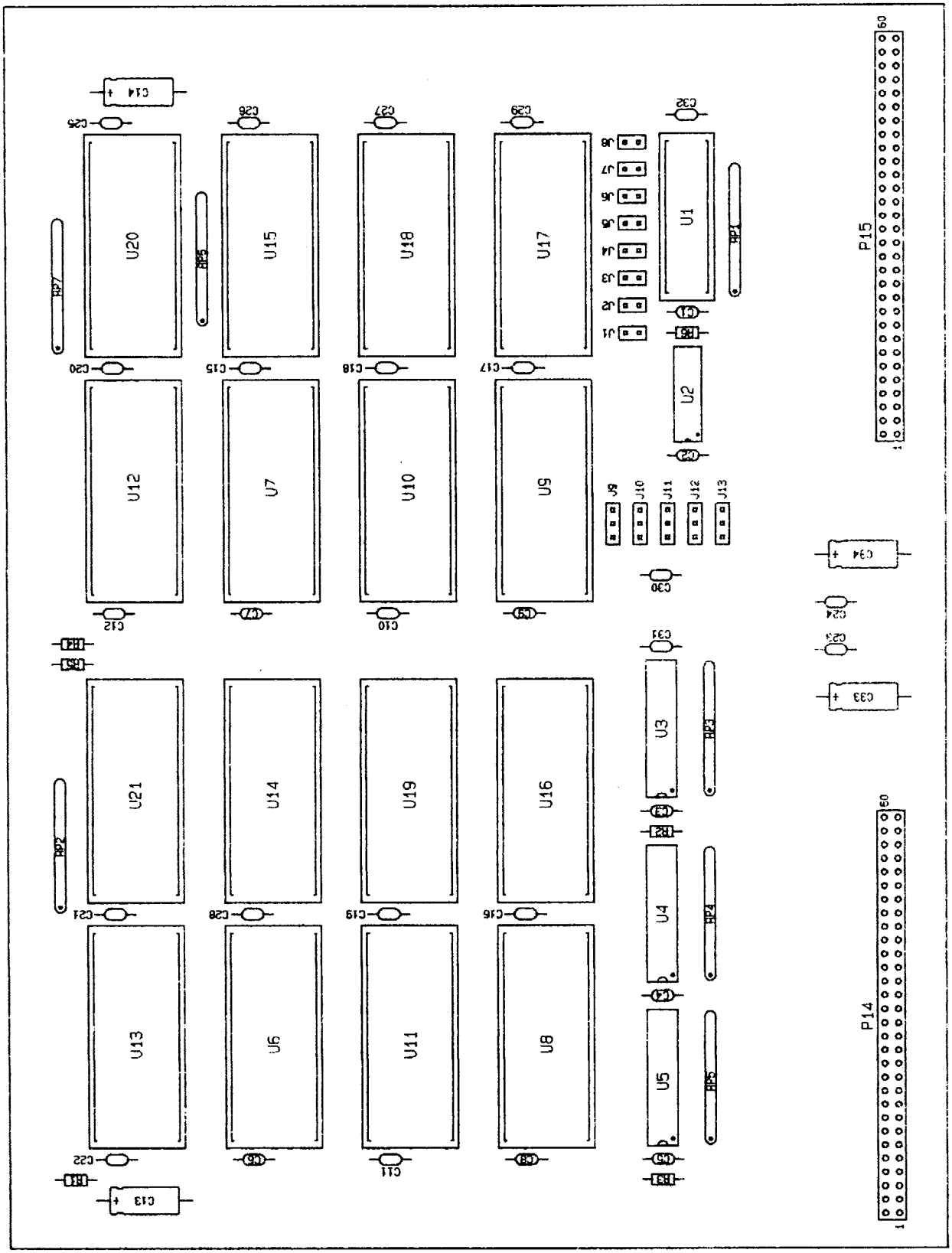

# A-17264-40029
# Memory Expansion Board Parts

| Part Number | Part Designator | Description |
|---|---|---|
| 5043-08980-00 | C1-C12, C15-C32 | 01µf Cap. 50V |
| 5040-09343-00 | C13, C14, C33, C34 | 10µf Cap. 16V |
| 5010-13365-00 | R1, R6 | 4.7KΩ Res. 1/8W, 5% |
| 5010-13363-00 | R2-R5 | 100Ω Res. 1/8W, 5% |
| 5019-09367-00 | RP3-RP7 | 4.7Ω SIP Res. 9R, 10 pin |
| 5320-13437-00 | U3-U5 | IC, 74ACTQ244 |
| 5700-12088-00 | U6-U21 | 32-pin Socket, .600 |
| 5796-13837-00 | P14, P15 | 60-pin Connector Header |
| A-5343-40029-19 | U8 | EPROM |
| A-5343-40029-20 | U9 | EPROM |
| A-5343-40029-21 | U6 | EPROM |
| A-5343-40029-22 | U7 | EPROM |
| A-5343-40029-23 | U11 | EPROM |
| A-5343-40029-24 | U10 | EPROM |
| A-5343-40029-25 | U13 | EPROM |
| A-5343-40029-26 | U12 | EPROM |

# A-17319-40029
# Sound Board Assembly

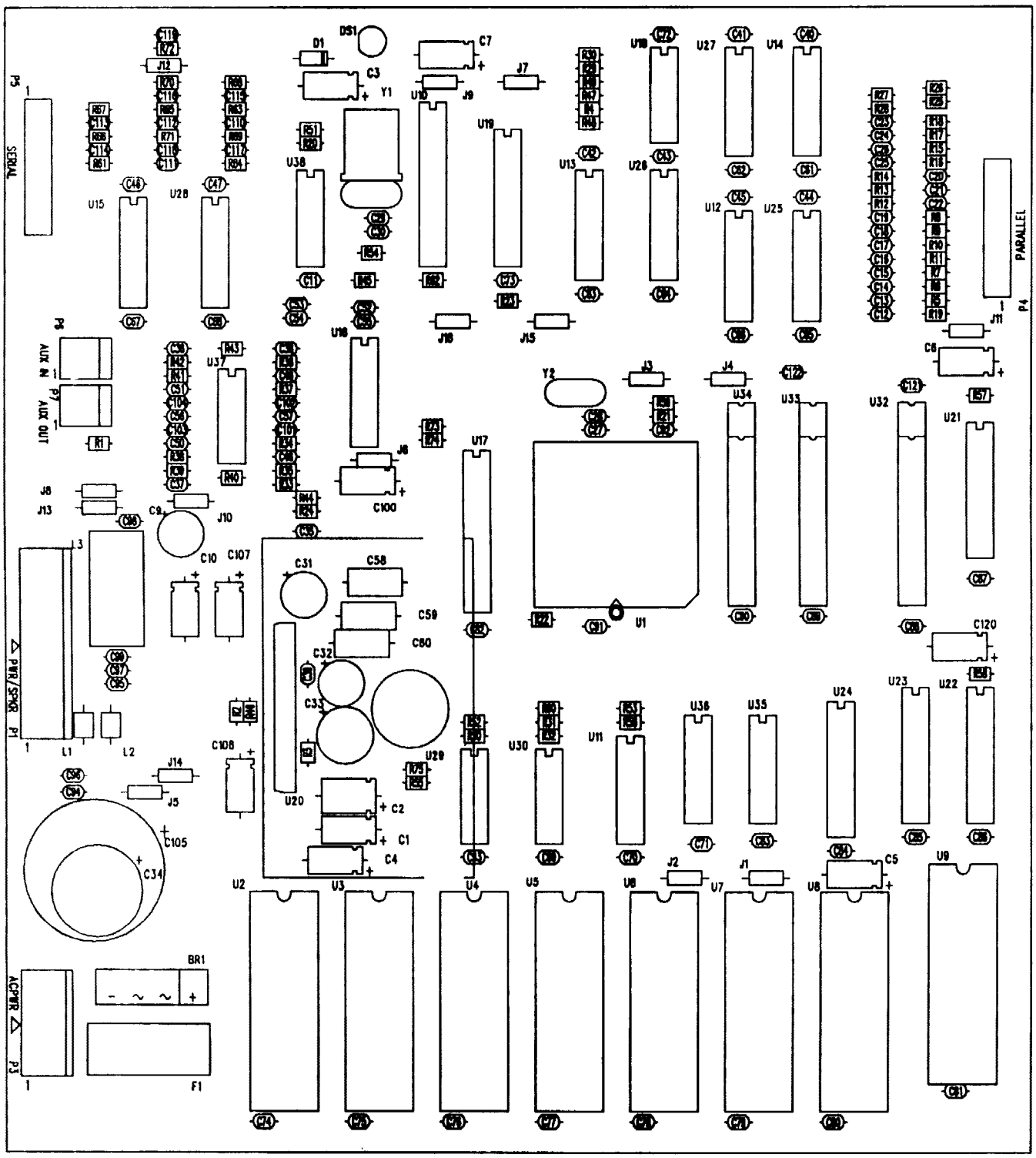

# A-17319-40029
# Sound Board Parts

| Part Number | Part Designator | Description |
|---|---|---|
| 20-9915 | J5, J8, J10, J13 | Wire Insulated Jumper |
| 5010-09534-00 | J1, J4, J6, J7, J15 | 0Ω Res., 1/4W |
| 5010-13363-00 | R45, R48, R49, R51, R57-R60 | 100Ω Res., 5% |
| 5010-13365-00 | R21-R23, R25-R29, R31, R32, R50, R53, R55, R56, R73-R75 | 4.7KΩ Res., 5% |
| 5010-13366-00 | R4 | 470Ω Res., 5% |
| 5010-13371-00 | R52 | 330Ω Res., 5% |
| 5010-13372-00 | R47 | 220Ω Res., 5% |
| 5010-13472-00 | R5-R19 | 47Ω Res., 5% |
| 5010-13361-00 | R1 | 1KΩ Res., 1/8W, 2% |
| 5013-13842-00 | R33-R44 | 6.19KΩ Res., 1% |
| 5010-13841-00 | R24 | 47KΩ Res., 5%, 200V |
| 5010-13844-00 | R3, R20 | 100KΩ Res., 5%, 200V |
| 5010-13858-00 | R2 | 820Ω Res., 1/8W, 5% |
| 5010-13370-00 | R46 | 15KΩ Res., 1/8W, 5% |
| 5040-09332-00 | C2 | 47µf Cap., ±20%, Axial |
| 5040-09343-00 | C1, C2, C4-C7, C10, C100, C106, C107, C120 | 10µf Cap., ±20%, Axial |
| 5043-08980-00 | C39-C45 | .01µf Cap., +80%/-20%, Axial |
| 5043-08996-00 | C3, C52-C57, C61-C61, C69-C99, C121, C122 | .1µf Cap., ±20%, Axial |
| 5045-12926-00 | C58-C60 | .1µf Cap., ±10%, Axial Film |
| 5048-11028-00 | C27, C28 | 22pf Cap., ±20%, Axial |
| 5048-13375-00 | C11-C26 | 100pf Cap., ±20%, Axial |
| 5048-13608-00 | C51 | 6800pf Cap., 5%, Axial |
| 5048-13609-00 | C48-C50 | 3900pf Cap., 5%, Axial |
| 5048-13610-00 | C35-C38 | 1000pf Cap., ±20%, Axial |
| 5048-13611-00 | C101-C104 | 680pf Cap., ±20%, Axial |
| 5070-08919-00 | D5 | Diode, 1N4148 |
| 01-10516 | | Heat Sink |

| Part Number | Part Designator | Description |
|---|---|---|
| 5280-08974-00 | U29 | IC, 7406 |
| 5281-09486-00 | U19 | IC, 74LS374 |
| 5281-09487-00 | U18 | IC, 74LS74 |
| 5283-10551-00 | U30 | IC, 74F00 |
| 5311-10948-00 | U11 | IC, 74HC138 |
| 5311-12043-00 | U35, U36 | IC, 74HC174 |
| 5311-12287-00 | U21-U23 | IC, 74HC541 |
| 5311-12538-00 | U38 | IC, 74HC14 |
| 5320-13436-00 | U24 | IC, 74ACTQ245 |
| 5340-12958-00 | U25-U27 | IC, 26LS31 |
| 5340-12959-00 | U12-U14 | IC, 26LS32A |
| 5340-13304-00 | U32-U34 | IC, SRAM, 2Kx8 |
| 5370-12730-00 | U37 | IC, TL084 |
| 5370-13308-00 | U20 | IC, MB3731 SIP |
| 5371-13299-00 | U16 | IC, AD1851 |
| 5520-13301-00 | Y2 | 10MHz Crystal |
| 5551-09822-00 | L3 | 4.7µH Inductor |
| 5556-12513-00 | L1, L2 | Ferrite Bead |
| 5671-13732-00 | DS1 | Display LED, Red |
| 5700-12088-00 | U2-U9 | 32-pin Socket |
| 5700-12253-00 | U1 | 68-pin Socket |
| 5700-12047-00 | U17 | 24-pin Socket |
| 5791-09437-00 | P4 | 100 C 10 x 2 |
| 5791-10862-02 | P6, P7 | 2H Str Sq Pin .156 |
| 5791-10862-05 | P3 | 5H Str Sq Pin .156 |
| 5791-10862-09 | P1 | 9H Str Sq Pin .156 |
| 5400-13298-00 | U1 | IC, ADSP2105 PLCC |
| A-17481 | U17 | IC, PLD GAL20V8, 25ns |
| A-5343-40029-35 | U2 | EPROM |
| A-5343-40029-36 | U3 | EPROM |
| A-5354-40029-37 | U4 | EPROM |
| A-5343-40029-38 | U5 | EPROM |
| A-5343-40029-39 | U6 | EPROM |
| A-5343-40029-40 | U7 | EPROM |

## *NOTES*

# MORTAL KOMBAT II

SECTION
three

## Schematics and Wiring Diagrams

# JAMMA Chart

| Function | Wire Color | Pin | Pin | Wire Color | Function |
|---|---|---|---|---|---|
| Ground | Black | 1 | A | Black | Ground |
| Ground | Black | 2 | B | Black | Ground |
| +5 Volts DC | Red | 3 | C | Red | +5 Volts DC |
| +5 Volts DC | Red | 4 | D | Red | +5 Volts DC |
| -5 Volts DC | Yellow | 5 | E | Yellow | -5 Volts DC |
| +12 Volts DC | Orange | 6 | F | Orange | +12 Volts DC |
| | Key | 7 | H | Key | |
| Meter 1 | Brown-Red | 8 | J | Brown | Meter 2 |
| | N/C | 9 | K | N/C | |
| Speaker (+) | Red-Gray | 10 | L | Brown-Gray | Speaker (-) |
| | N/C | 11 | M | N/C | |
| Video Red | Red | 12 | N | Green | Video Green |
| Video Blue | Brown | 13 | P | White | Video Sync |
| Video Ground | Shield | 14 | R | White-Gray | Service Switch |
| Test Switch | Black-Blue | 15 | S | Black-Green | Tilt Switch |
| Coin 1 | Black-Brown | 16 | T | Black-Red | Coin 2 |
| Start 1 | White | 17 | U | Violet-White | Start 2 |
| 1 Up | White-Black | 18 | V | Violet-Black | 2 Up |
| 1 Down | White-Brown | 19 | W | Violet-Brown | 2 Down |
| 1 Left | White-Red | 20 | X | Violet-Red | 2 Left |
| 1 Right | White-Orange | 21 | Y | Violet-Orange | 2 Right |
| 1 High Punch | White-Yellow | 22 | Z | Violet-Yellow | 2 High Punch |
| 1 Block | White-Green | 23 | a | Violet-Green | 2 Block |
| 1 High Kick | White-Blue | 24 | b | Violet-Blue | 2 High Kick |
| N/C | White-Violet | 25 | c | Violet | N/C |
| | N/C | 26 | d | N/C | |
| | N/C | 27 | e | N/C | |
| Ground | Black | 28 | f | Black | Ground |

# Interboard Wiring Diagram

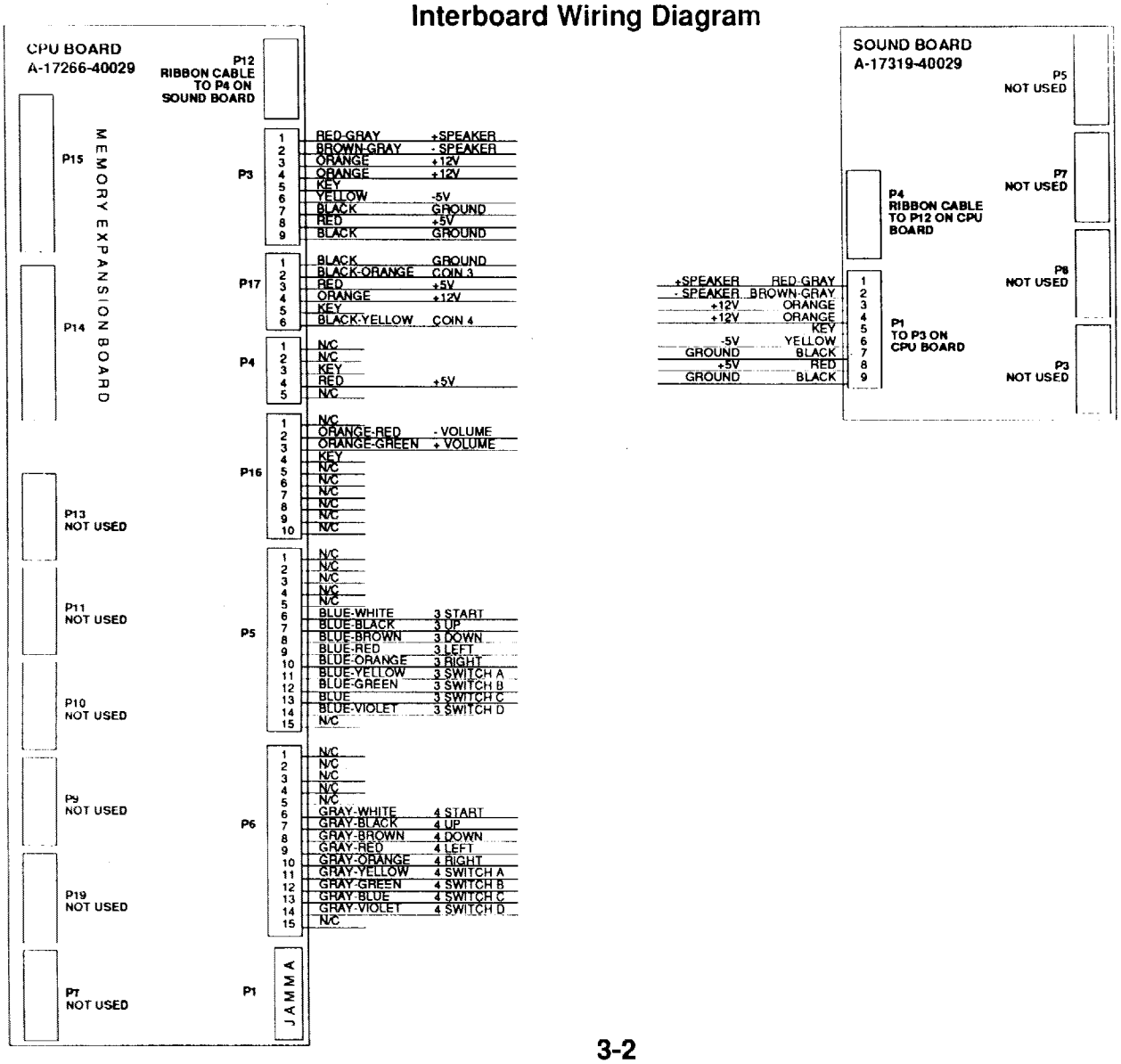

# Cabinet Wiring Diagram

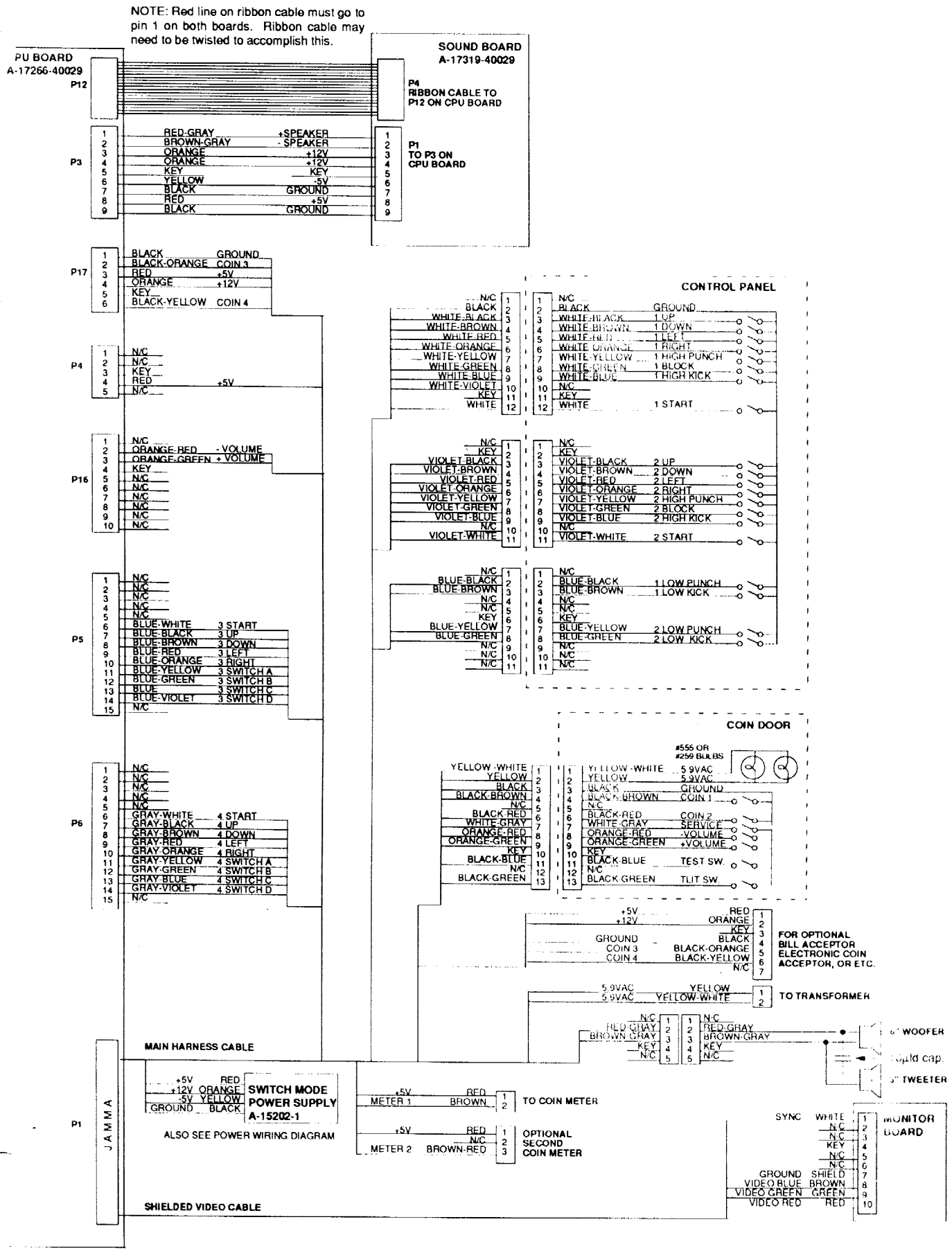

## Power Wiring Diagram

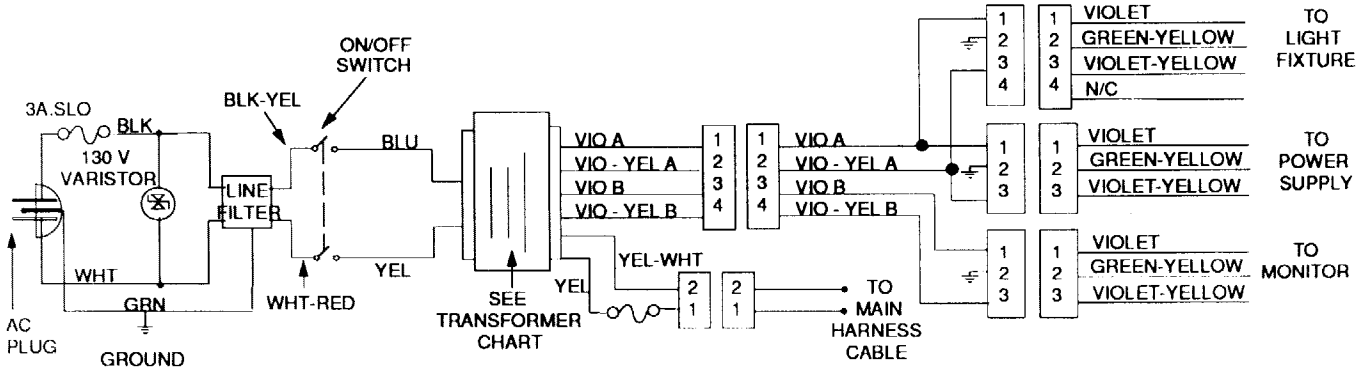


**NOTE: FOR 230VAC OPERATION:**
**1. FUSE IS 2.0A SLOW BLOW.**
**2. VARISTOR IS 250V.**

## Transformer Chart

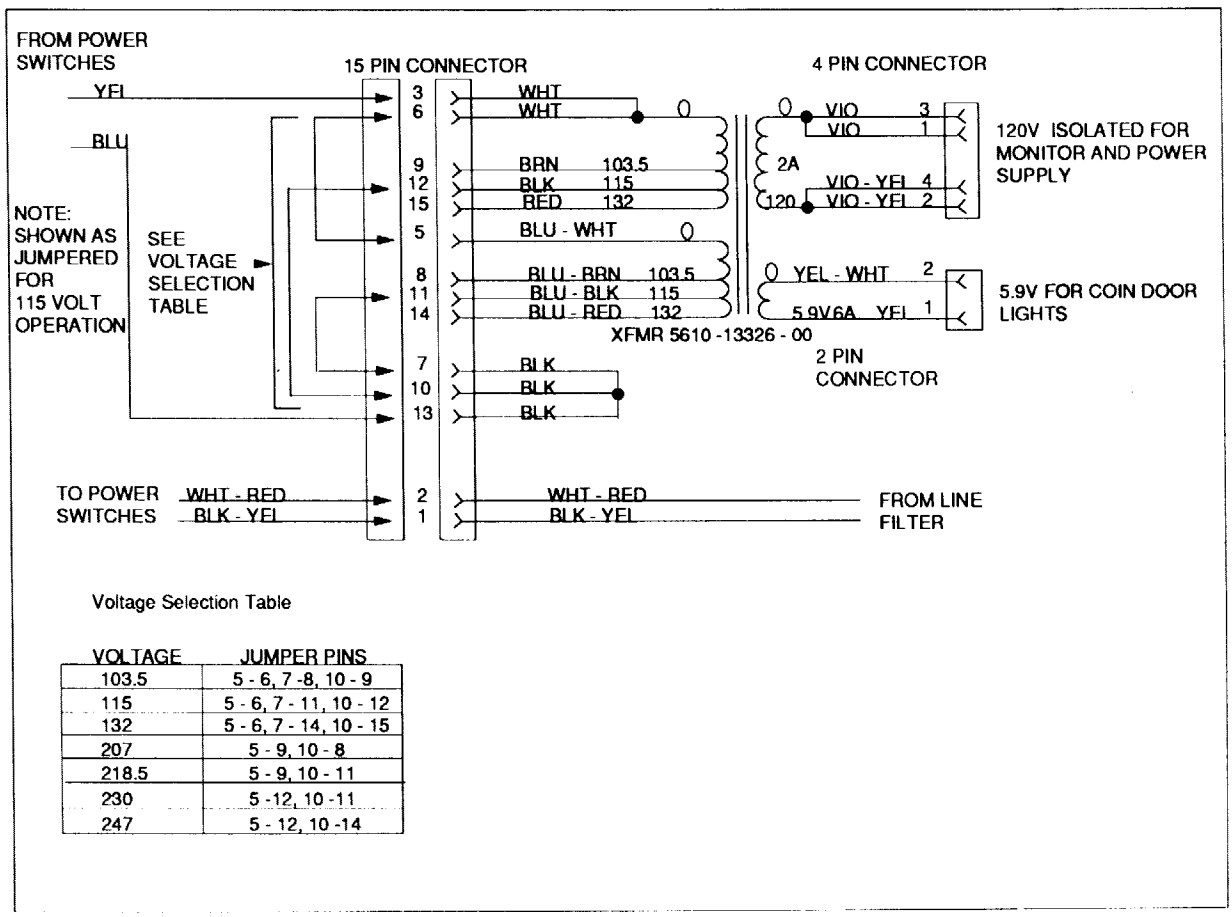


Voltage Selection Table

| VOLTAGE | JUMPER PINS |
|---|---|
| 103.5 | 5 - 6, 7 -8, 10 - 9 |
| 115 | 5 - 6, 7 - 11, 10 - 12 |
| 132 | 5 - 6, 7 - 14, 10 - 15 |
| 207 | 5 - 9, 10 - 8 |
| 218.5 | 5 - 9, 10 - 11 |
| 230 | 5 -12, 10 -11 |
| 247 | 5 - 12, 10 -14 |

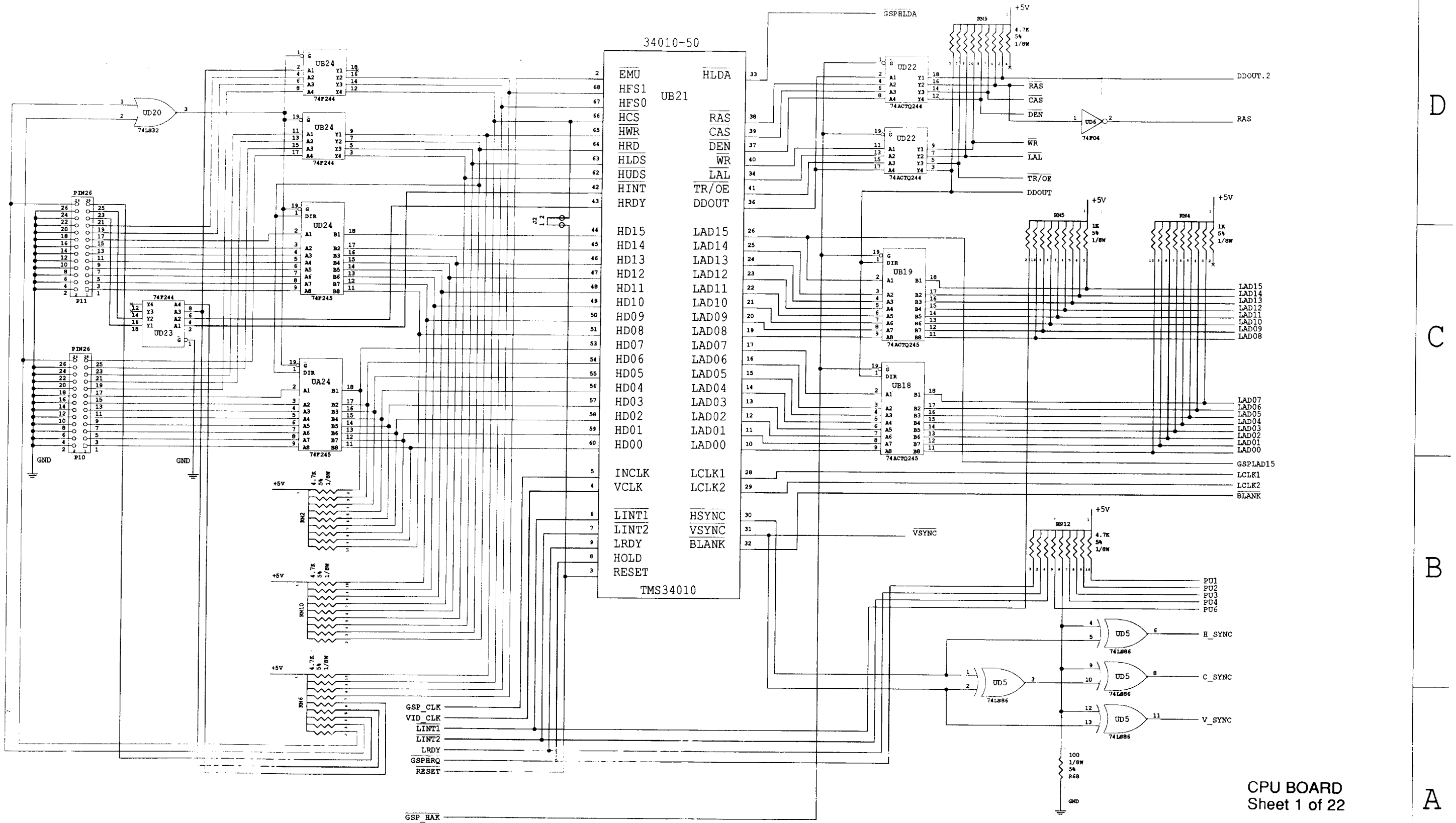


CPU BOARD
Sheet 1 of 22

INFORMATION CONTAINED HEREIN IS CONFIDENTIAL PROPERTY AND MAY NOT BE USED OR DISCLOSED WITHOUT EXPRESS WRITTEN CONSENT FROM THE COMPANY.

| | | | |
|---|---|---|---|
| PROJECT ENG. REM | FIRST PROJ. NO 40023 | DATE 09DEC92 | WILLIAMS ELECTRONICS AND GAMES INC.<br>MIDWAY MANUFACTURING COMPANY<br>3401 N. CALIFORNIA AVE. CHICAGO IL. |
| DWN. BY REM | DATE | FIRST USEAGE A-14816 | DATE 09DEC92 |
| CHECKED REM | DATE | CURRENT PROJECT 40023 | DATE 19AUG93 |
| APPROVED | DATE | SHEET 01 OF 22 | PART NO. 16-9470 REV. 5 |

TITLE: 34010 PROCESSOR

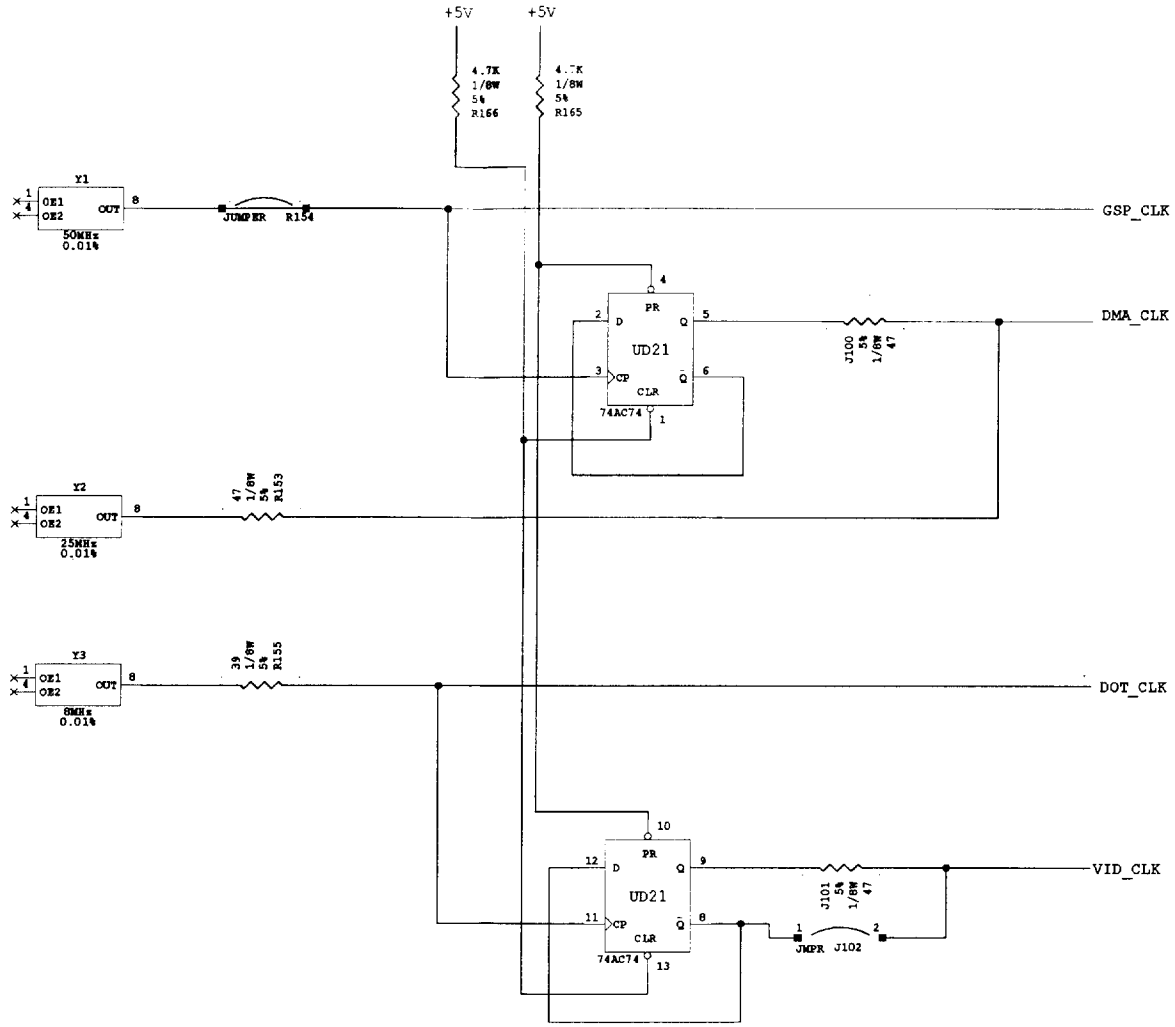


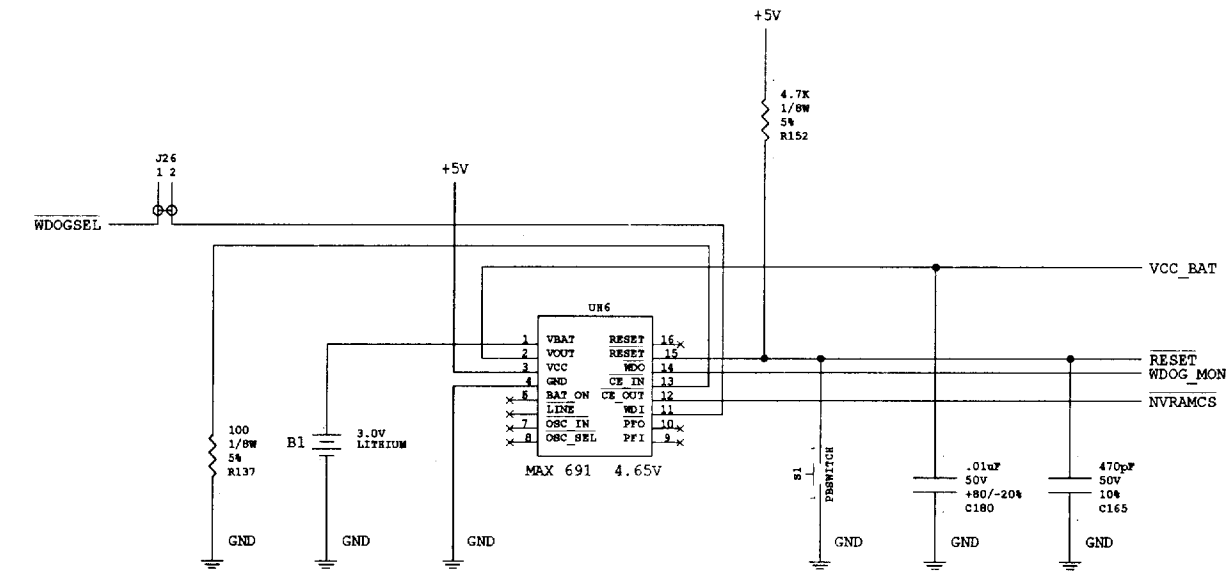


CPU BOARD
Sheet 2 of 22

INFORMATION CONTAINED HEREIN IS CONFIDENTIAL PROPERTY AND MAY NOT BE USED OR DISCLOSED WITHOUT EXPRESS WRITTEN CONSENT FROM THE COMPANY.

| | | | |
|---|---|---|---|
| PROJECT ENG. REM | FIRST PROJ. NO 40023 | DATE 09DEC92 | WILLIAMS ELECTRONICS AND GAMES INC.<br>MIDWAY MANUFACTURING COMPANY<br>3401 N. CALIFORNIA AVE. CHICAGO IL. |
| DWN. BY REM | DATE | FIRST USEAGE A-14816 | DATE 09DEC92 |
| CHECKED REM | DATE | CURRENT PROJECT 40023 | DATE 19AUG93 |
| APPROVED | DATE | SHEET 02 OF 22 | PART NO. 16-9470 REV. 5 |

TITLE: CLOCK GENERATION/POWER MONITOR

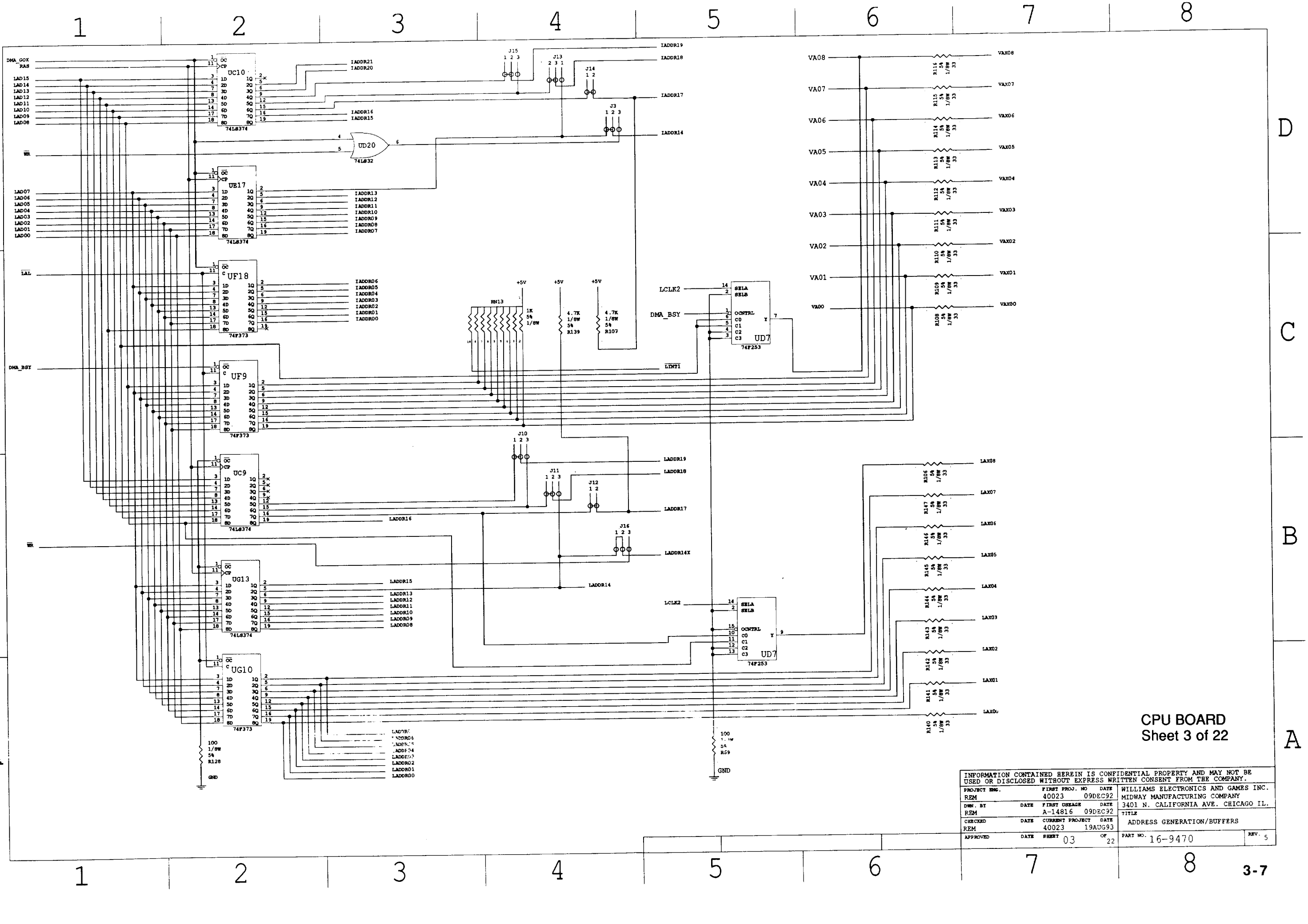


CPU BOARD
Sheet 3 of 22

INFORMATION CONTAINED HEREIN IS CONFIDENTIAL PROPERTY AND MAY NOT BE USED OR DISCLOSED WITHOUT EXPRESS WRITTEN CONSENT FROM THE COMPANY.

| | | | |
|---|---|---|---|
| PROJECT ENG. REM | FIRST PROJ. NO 40023 | DATE 09DEC92 | WILLIAMS ELECTRONICS AND GAMES INC. MIDWAY MANUFACTURING COMPANY 3401 N. CALIFORNIA AVE. CHICAGO IL. |
| DWN. BY REM | DATE | FIRST USEAGE A-14816 | DATE 09DEC92 |
| CHECKED REM | DATE | CURRENT PROJECT 40023 | DATE 19AUG93 |
| APPROVED | DATE | SHEET 03 OF 22 | PART NO. 16-9470 REV. 5 |

TITLE: ADDRESS GENERATION/BUFFERS

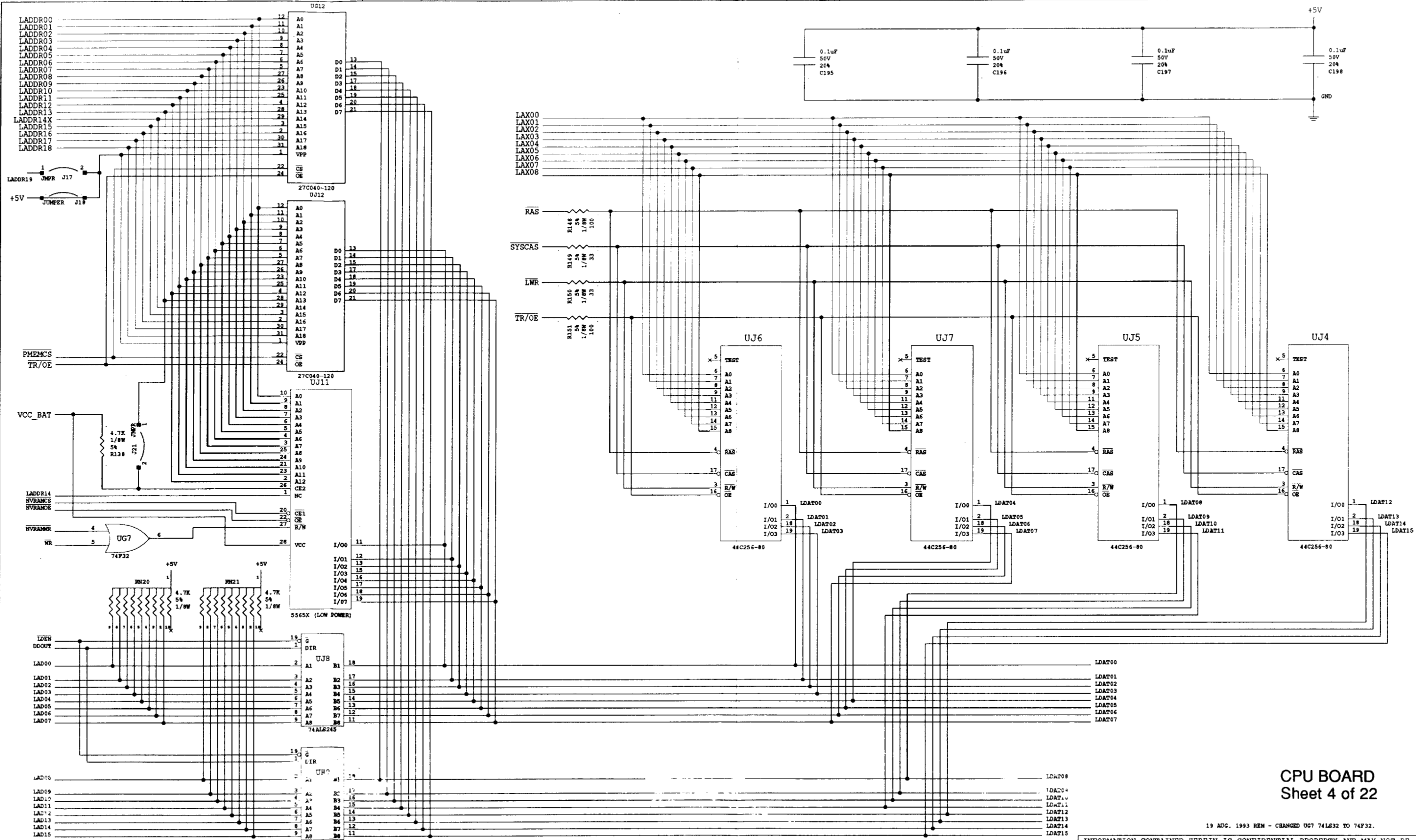


# CPU BOARD
## Sheet 4 of 22

19 AUG. 1993 REM - CHANGED UG7 74LS32 TO 74F32.

INFORMATION CONTAINED HEREIN IS CONFIDENTIAL PROPERTY AND MAY NOT BE USED OR DISCLOSED WITHOUT EXPRESS WRITTEN CONSENT FROM THE COMPANY.

| | | | | |
|---|---|---|---|---|
| PROJECT ENG. REM | | FIRST PROJ. NO 40023 | DATE 09DEC92 | WILLIAMS ELECTRONICS AND GAMES INC. MIDWAY MANUFACTURING COMPANY 3401 N. CALIFORNIA AVE. CHICAGO IL. |
| DWN. BY REM | DATE | FIRST USEAGE A-14186 | DATE 09DEC92 | TITLE SYSTEM MEMORY |
| CHECKED REM | DATE | CURRENT PROJECT 40023 | DATE 19AUG93 | |
| APPROVED | DATE | SHEET 04 | OF 22 | PART NO. 16-9470 REV. 5 |

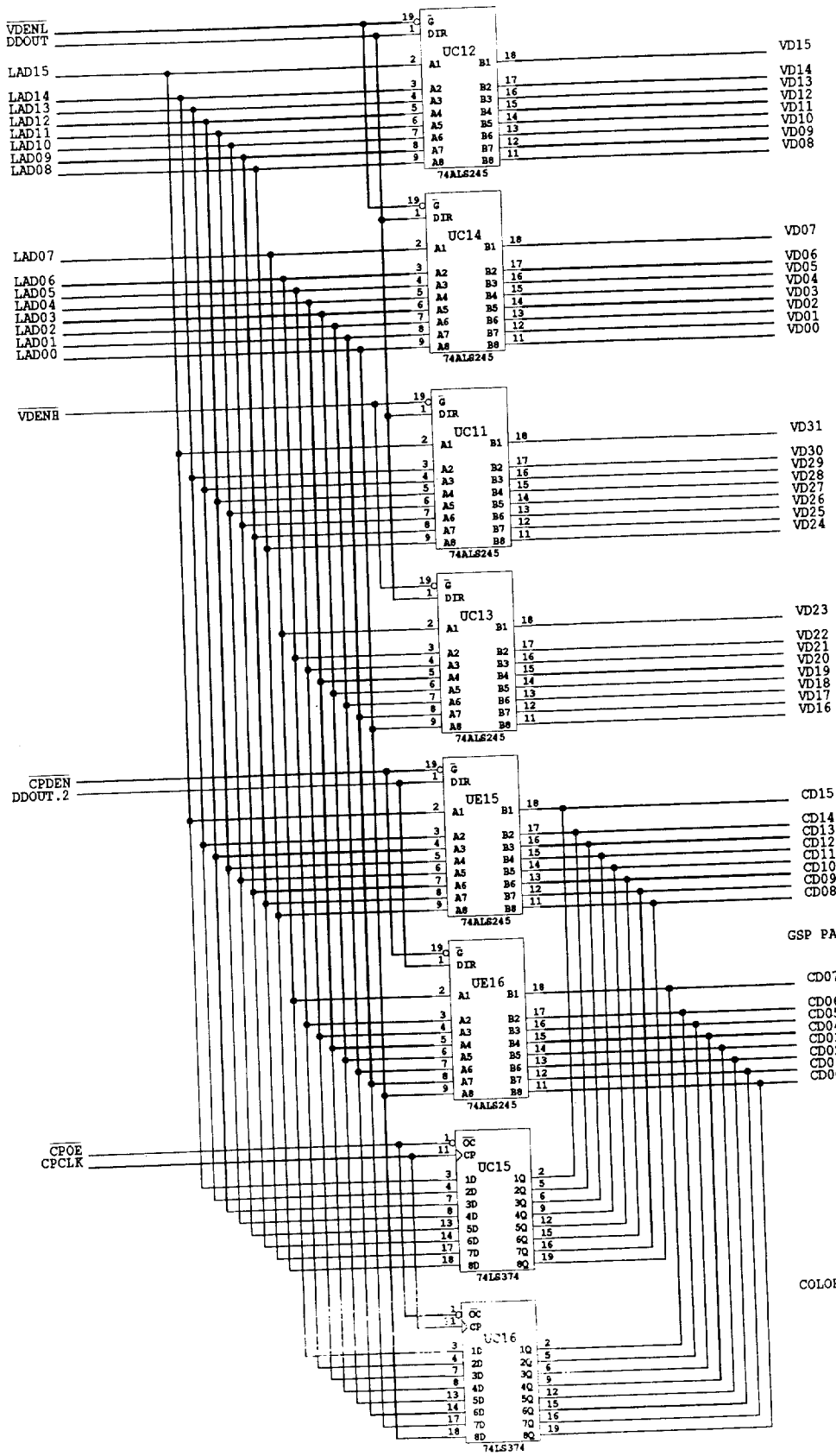


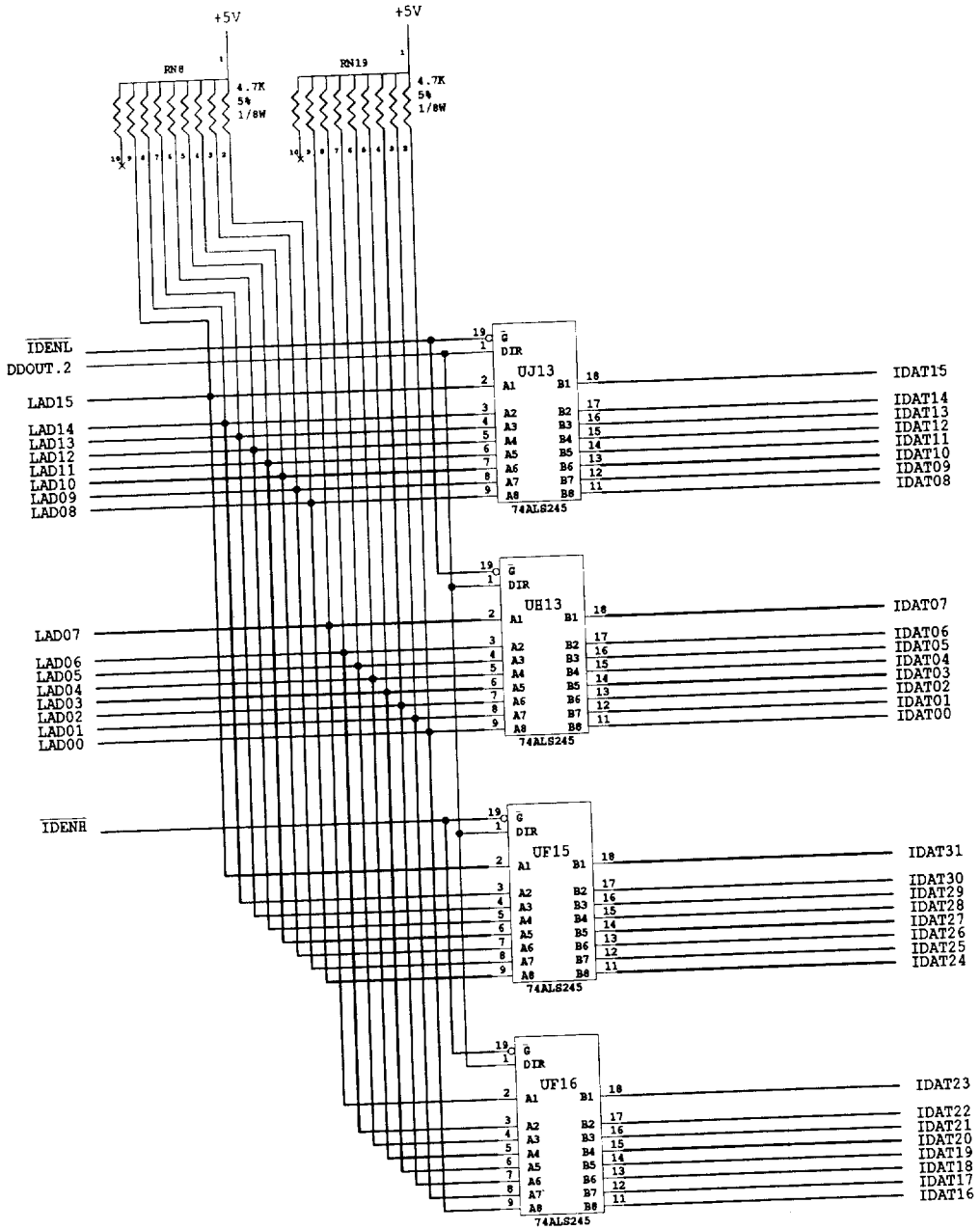


CPU BOARD
Sheet 5 of 22

INFORMATION CONTAINED HEREIN IS CONFIDENTIAL PROPERTY AND MAY NOT BE USED OR DISCLOSED WITHOUT EXPRESS WRITTEN CONSENT FROM THE COMPANY.

| | | | | |
|---|---|---|---|---|
| PROJECT ENG. REM | | FIRST PROJ. NO 40023 | DATE 09DEC92 | WILLIAMS ELECTRONICS AND GAMES INC.<br>MIDWAY MANUFACTURING COMPANY<br>3401 N. CALIFORNIA AVE. CHICAGO IL. |
| DWN. BY REM | DATE | FIRST USEAGE A-14816 | DATE 09DEC92 | TITLE<br>IMAGE/VIDEO MEMORY DATA BUFFERS |
| CHECKED REM | DATE | CURRENT PROJECT 40023 | DATE 19AUG93 | |
| APPROVED | DATE | SHEET 05 | OF 22 | PART NO. 16-9470 REV. 5 |

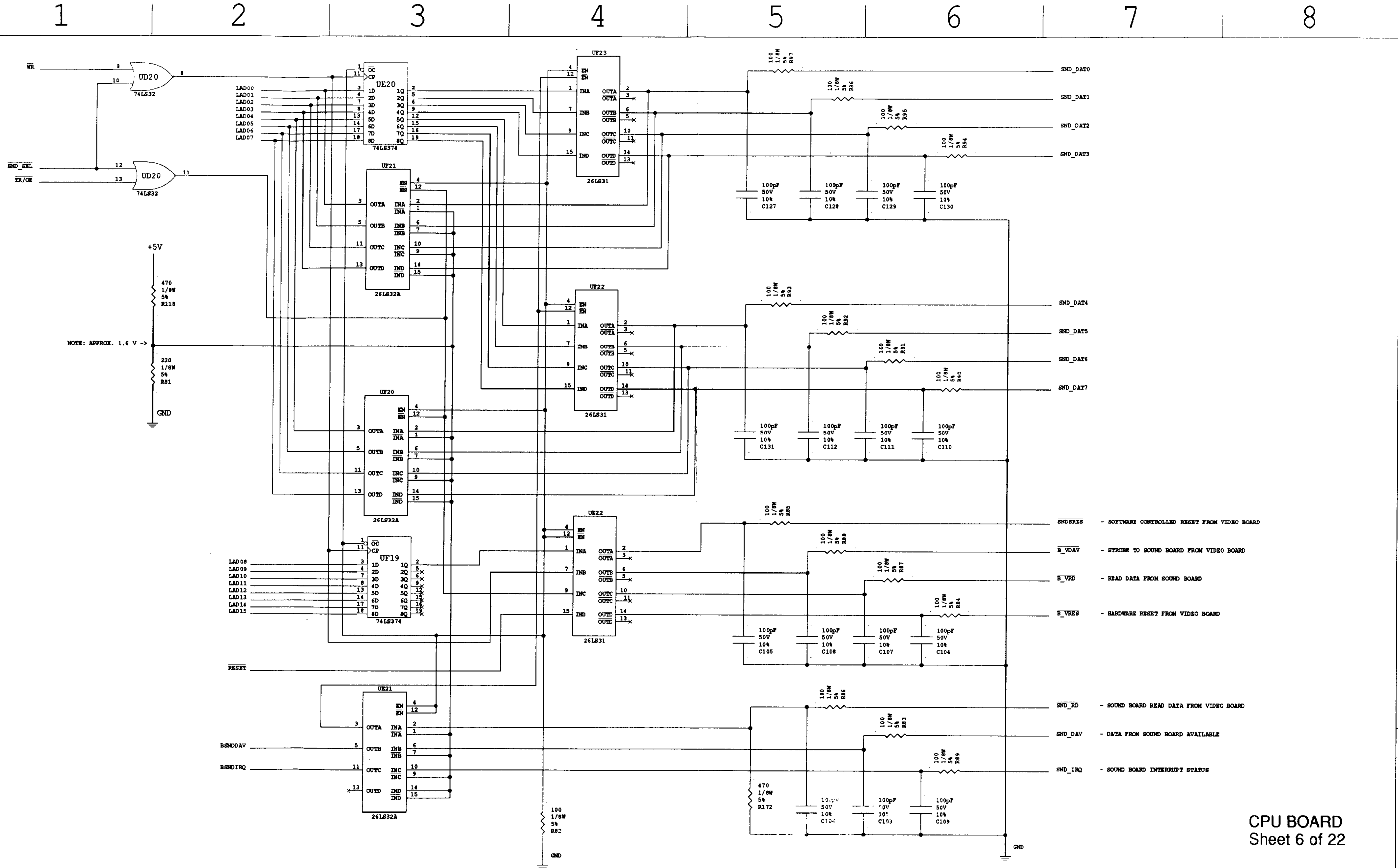


INFORMATION CONTAINED HEREIN IS CONFIDENTIAL PROPERTY AND MAY NOT BE USED OR DISCLOSED WITHOUT EXPRESS WRITTEN CONSENT FROM THE COMPANY.

| | | | |
|---|---|---|---|
| PROJECT ENG. REM | | FIRST PROJ. NO 40023 | DATE 09DEC92 |
| DWN. BY REM | DATE | FIRST USEAGE A-14816 | DATE 09DEC92 |
| CHECKED REM | DATE | CURRENT PROJECT 40023 | DATE 19AUG93 |
| APPROVED | DATE | SHEET 06 | OF 22 |

WILLIAMS ELECTRONICS AND GAMES INC.
MIDWAY MANUFACTURING COMPANY
3401 N. CALIFORNIA AVE. CHICAGO IL.

TITLE: SOUND INTERFACE

PART NO. 16-9470 REV. 5

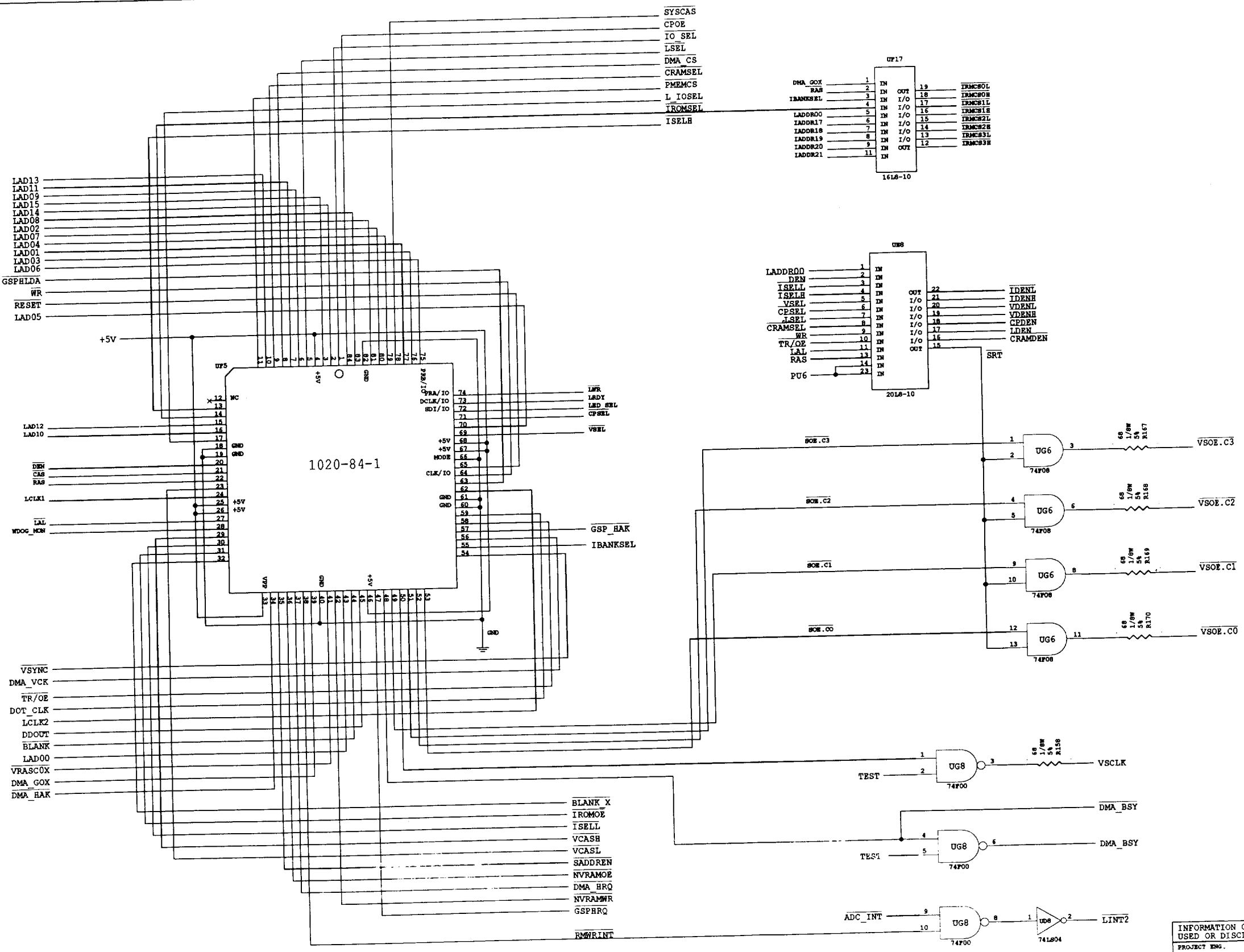


CPU BOARD
Sheet 7 of 22

INFORMATION CONTAINED HEREIN IS CONFIDENTIAL PROPERTY AND MAY NOT BE USED OR DISCLOSED WITHOUT EXPRESS WRITTEN CONSENT FROM THE COMPANY.

| | | | |
|---|---|---|---|
| PROJECT ENG. REM | | FIRST PROJ. NO 40023 | DATE 09DEC92 |
| DWN. BY REM | DATE | FIRST USEAGE A-14816 | DATE 09DEC92 |
| CHECKED REM | DATE | CURRENT PROJECT 40023 | DATE 19AUG93 |
| APPROVED | DATE | SHEET 07 | OF 22 |

WILLIAMS ELECTRONICS AND GAMES INC.
MIDWAY MANUFACTURING COMPANY
3401 N. CALIFORNIA AVE. CHICAGO IL.

TITLE: FPGA

PART NO. 16-9470 REV. 5

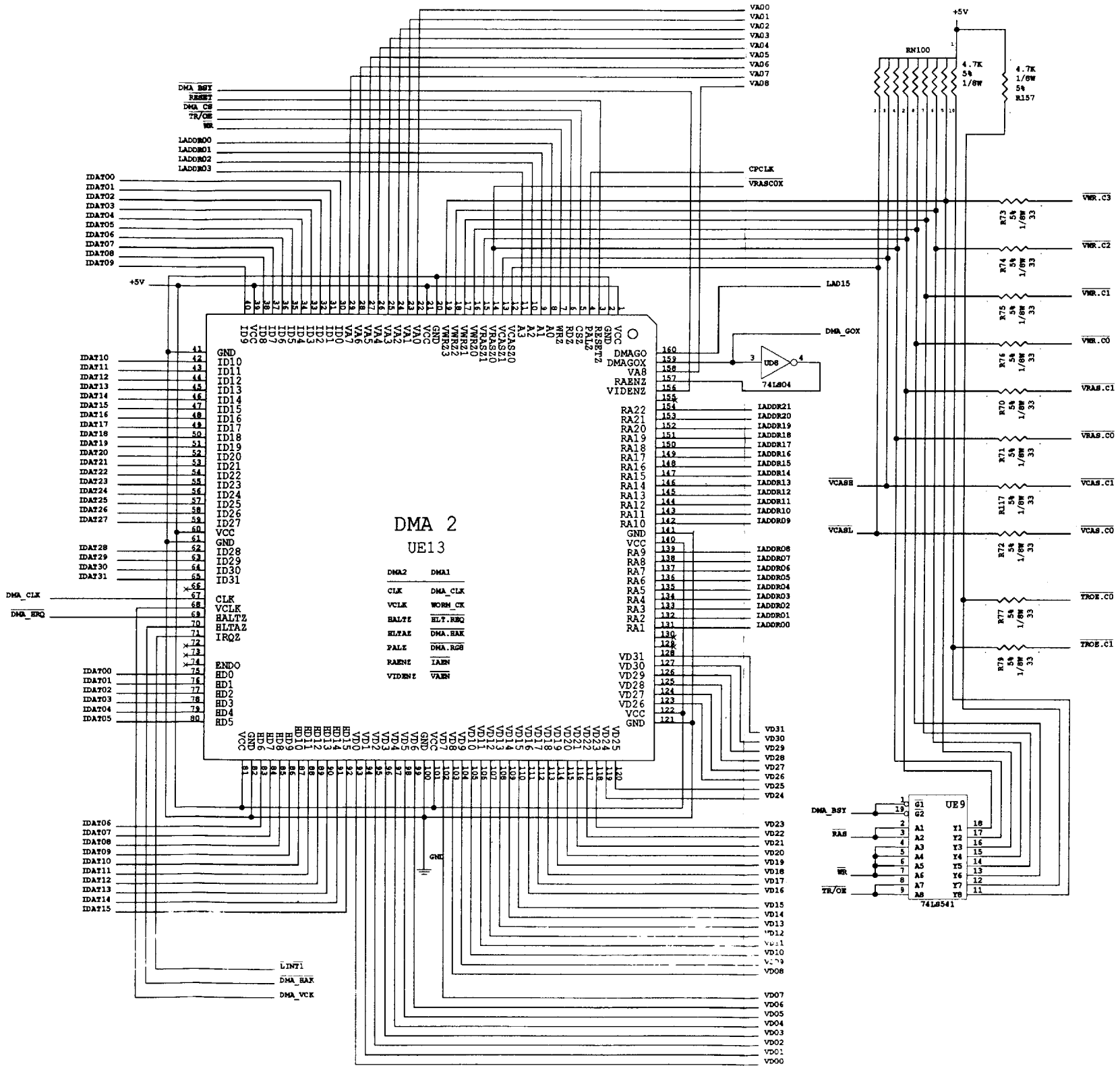


CPU BOARD
Sheet 8 of 22

INFORMATION CONTAINED HEREIN IS CONFIDENTIAL PROPERTY AND MAY NOT BE USED OR DISCLOSED WITHOUT EXPRESS WRITTEN CONSENT FROM THE COMPANY.

| | | | |
|---|---|---|---|
| PROJECT ENG. REM | FIRST PROJ. NO 40023 | DATE 09DEC92 | WILLIAMS ELECTRONICS AND GAMES INC. MIDWAY MANUFACTURING COMPANY 3401 N. CALIFORNIA AVE. CHICAGO IL. |
| DWN. BY REM | DATE | FIRST USEAGE A-14816 | DATE 09DEC92 |
| CHECKED REM | DATE | CURRENT PROJECT 40023 | DATE 19AUG93 |
| APPROVED | DATE | SHEET 08 | OF 22 |

TITLE: DMA

PART NO. 16-9470 REV. 5

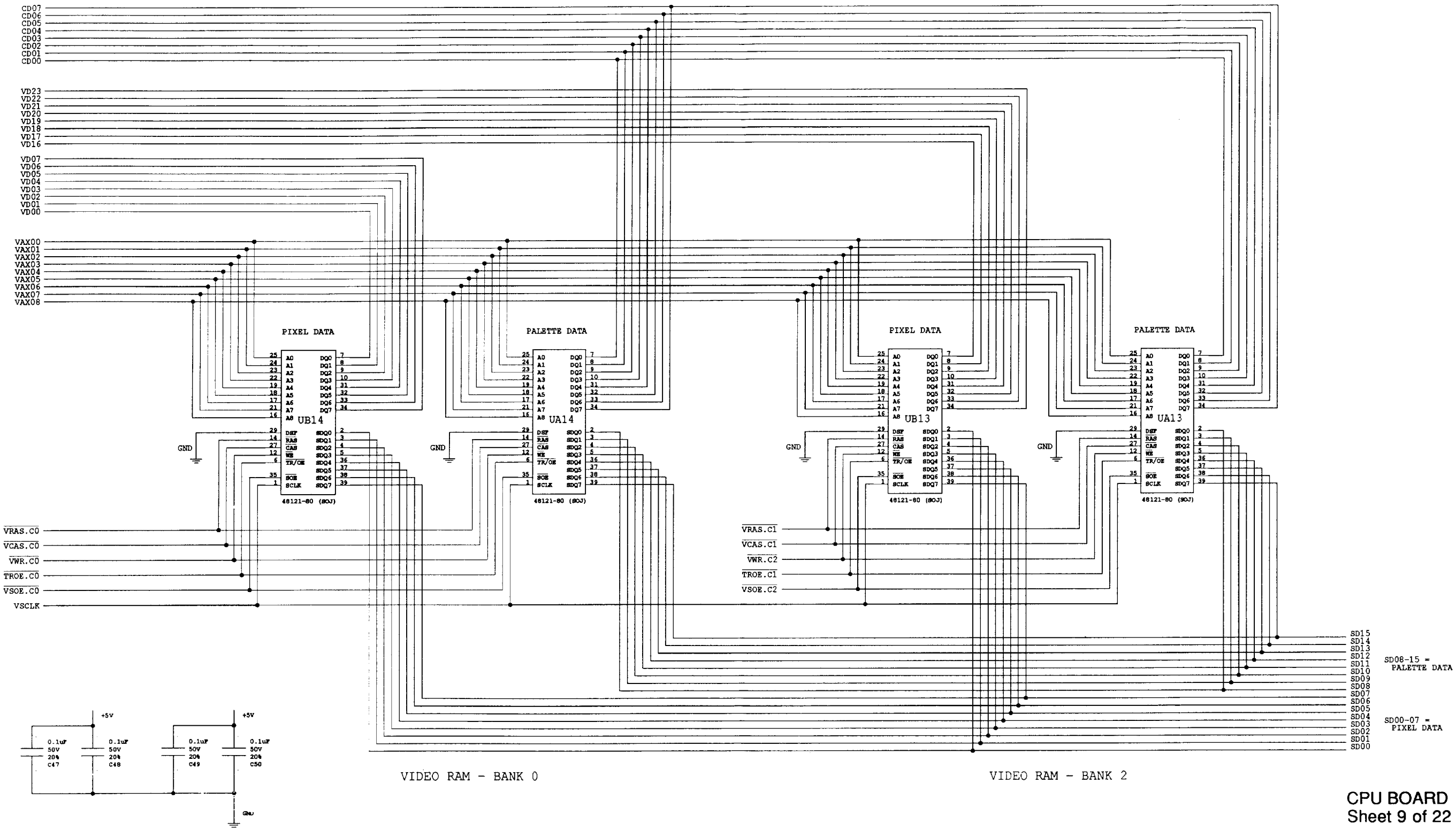


**CPU BOARD**
**Sheet 9 of 22**

INFORMATION CONTAINED HEREIN IS CONFIDENTIAL PROPERTY AND MAY NOT BE USED OR DISCLOSED WITHOUT EXPRESS WRITTEN CONSENT FROM THE COMPANY.

| | | | | |
|---|---|---|---|---|
| PROJECT ENG. REM | | FIRST PROJ. NO 40023 | DATE 09DEC92 | WILLIAMS ELECTRONICS AND GAMES INC.<br>MIDWAY MANUFACTURING COMPANY<br>3401 N. CALIFORNIA AVE. CHICAGO IL. |
| DWN. BY REM | DATE | FIRST USEAGE A-14816 | DATE 09DEC92 | TITLE<br>VIDEO RAM BANK 0/BANK 2 |
| CHECKED REM | DATE | CURRENT PROJECT 40023 | DATE 19AUG93 | |
| APPROVED | DATE | SHEET 09 | OF 22 | PART NO. 16-9470 REV. 5 |

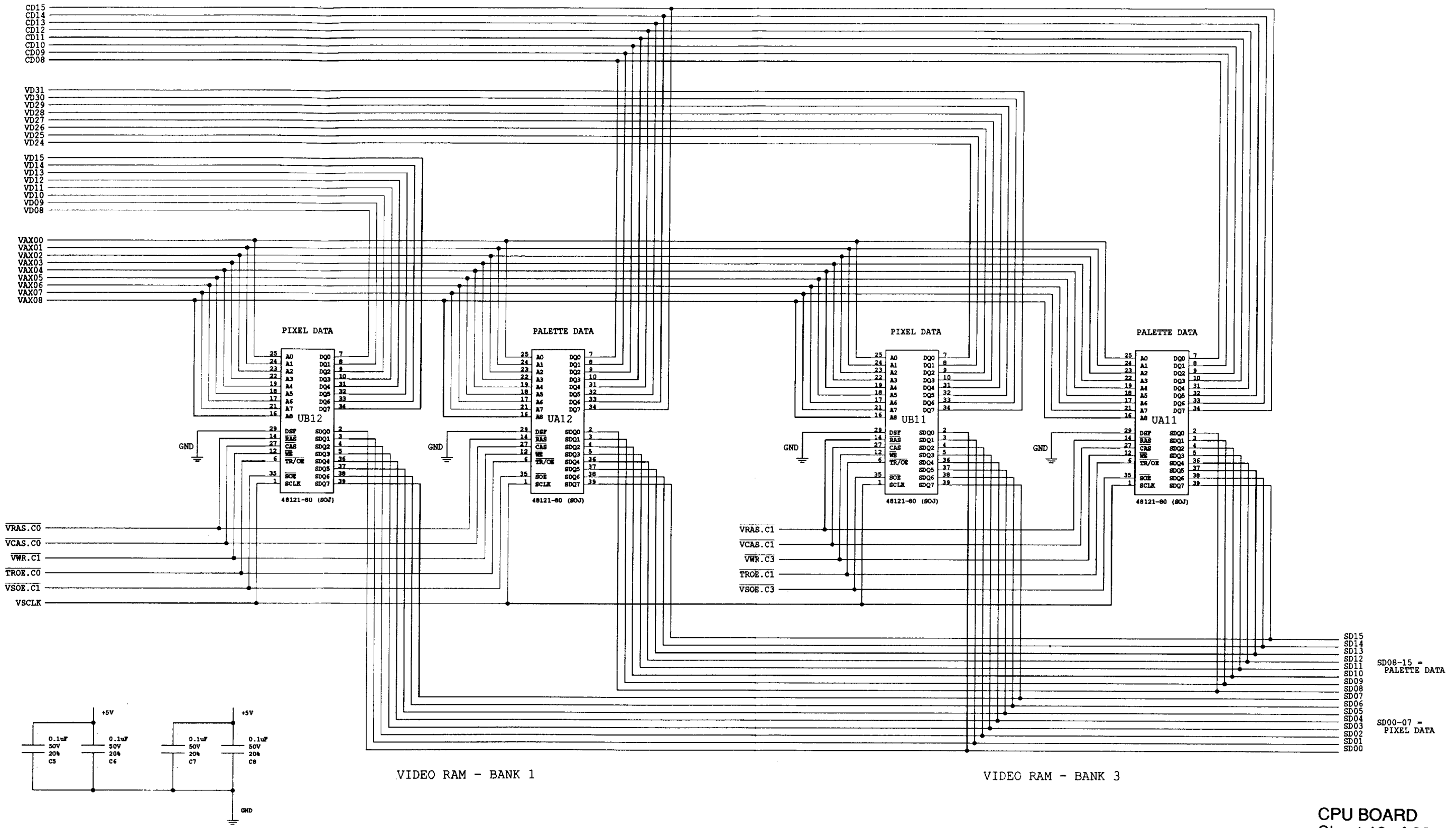


**CPU BOARD**
**Sheet 10 of 22**

INFORMATION CONTAINED HEREIN IS CONFIDENTIAL PROPERTY AND MAY NOT BE USED OR DISCLOSED WITHOUT EXPRESS WRITTEN CONSENT FROM THE COMPANY.

| | | | |
|---|---|---|---|
| PROJECT ENG. REM | FIRST PROJ. NO 40023 | DATE 09DEC92 | WILLIAMS ELECTRONICS AND GAMES INC. MIDWAY MANUFACTURING COMPANY 3401 N. CALIFORNIA AVE. CHICAGO IL. |
| DWN. BY REM DATE | FIRST USEAGE A-14816 | DATE 09DEC92 | TITLE VIDEO RAM BANK 1/BANK 3 |
| CHECKED REM DATE | CURRENT PROJECT 40023 | DATE 19AUG93 | |
| APPROVED DATE | SHEET 10 | OF 22 | PART NO. 16-9470 REV. 5 |

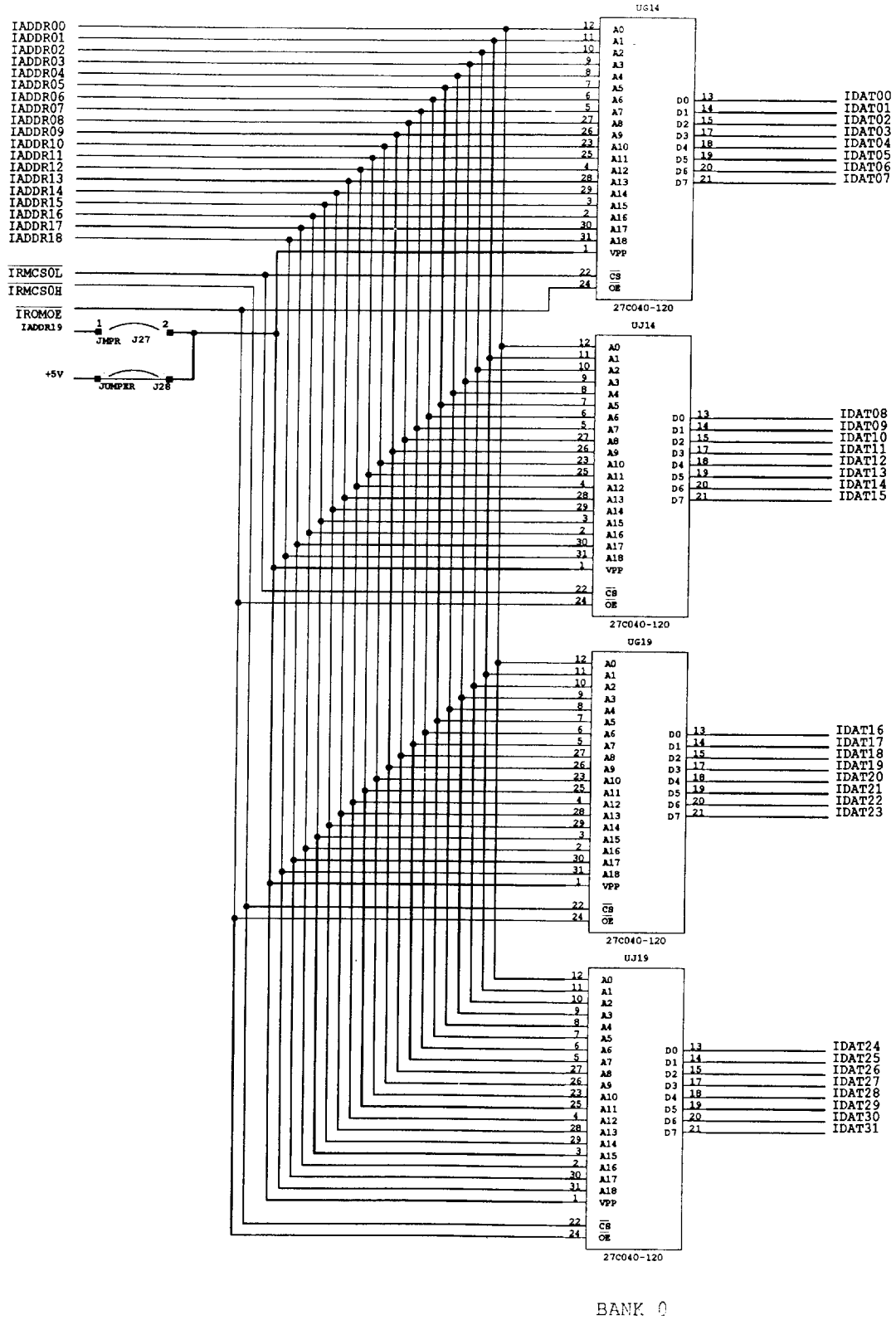


BANK 0

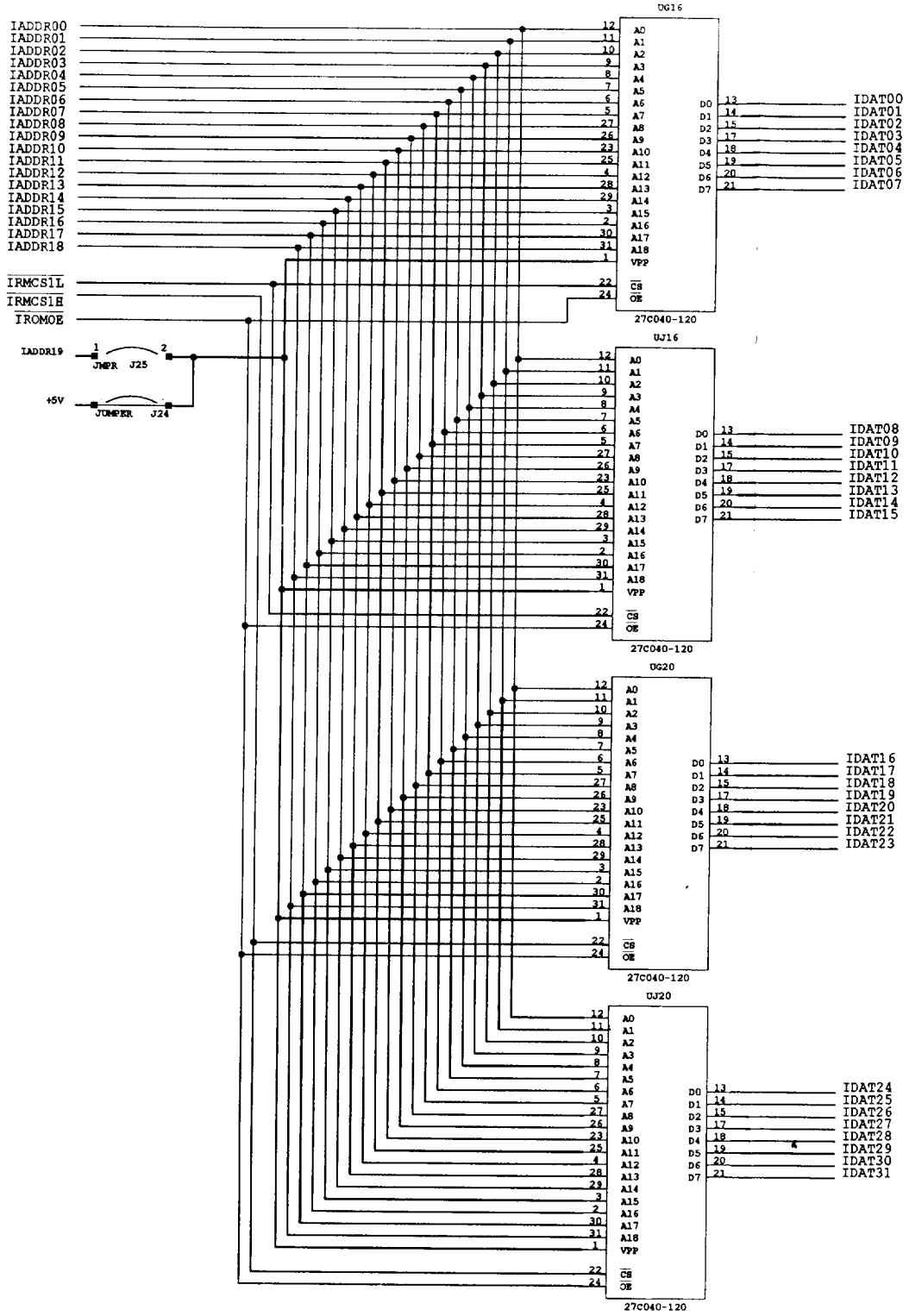


BANK 1

**CPU BOARD**
**Sheet 11 of 22**

INFORMATION CONTAINED HEREIN IS CONFIDENTIAL PROPERTY AND MAY NOT BE USED OR DISCLOSED WITHOUT EXPRESS WRITTEN CONSENT FROM THE COMPANY.

| | | | |
|---|---|---|---|
| PROJECT ENG. REM | FIRST PROJ. NO 40023 | DATE 09DEC92 | WILLIAMS ELECTRONICS AND GAMES INC.<br>MIDWAY MANUFACTURING COMPANY<br>3401 N. CALIFORNIA AVE. CHICAGO IL. |
| DWN. BY REM | DATE | FIRST USEAGE A-14816 | DATE 09DEC92 |
| CHECKED REM | DATE | CURRENT PROJECT 40023 | DATE 19AUG93 |
| APPROVED | DATE | SHEET 11 | OF 22 |

TITLE: IMAGE ROM BANK 0/BANK 1

PART NO. 16-9470 REV. 5

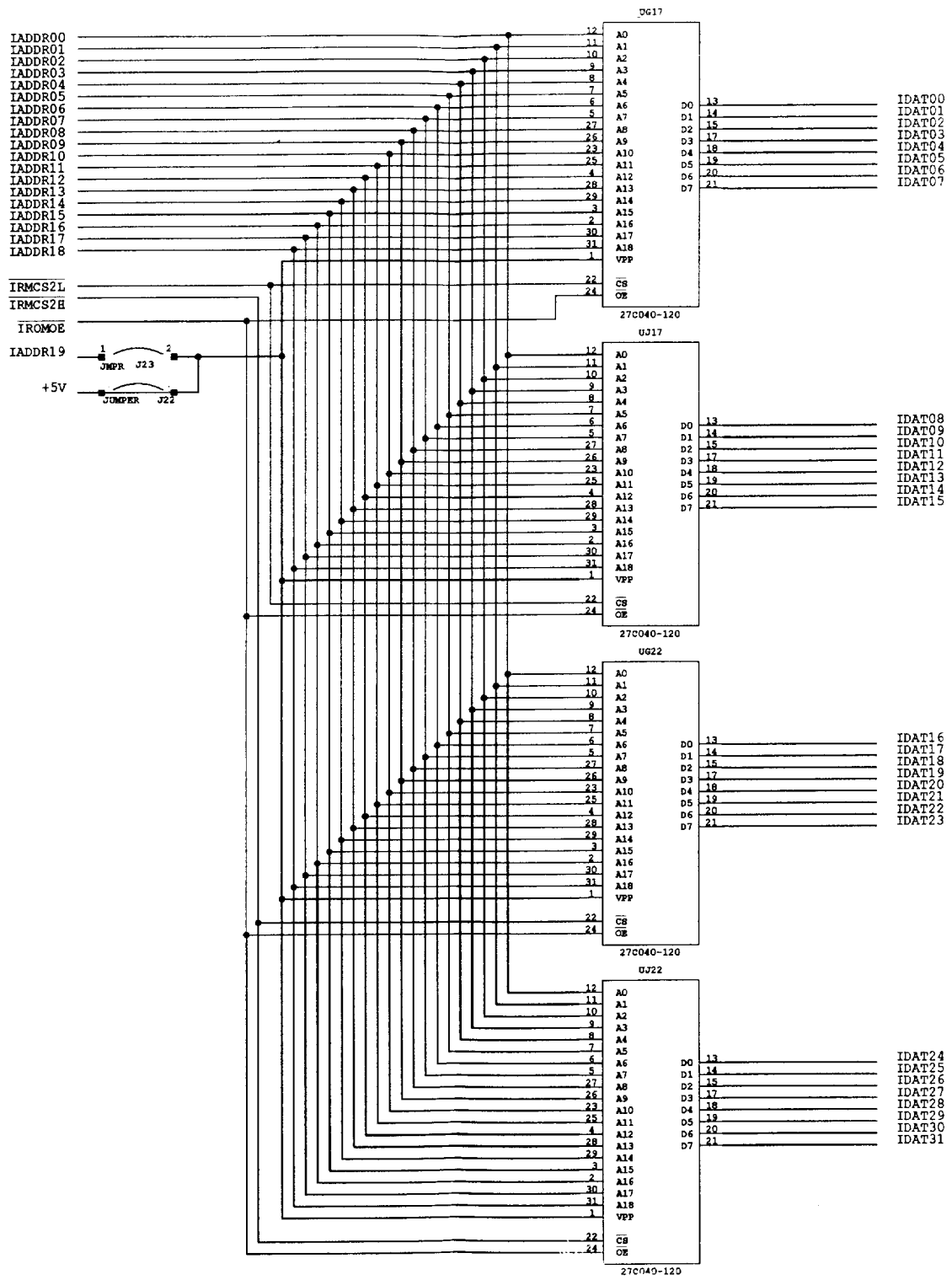


BANK 2

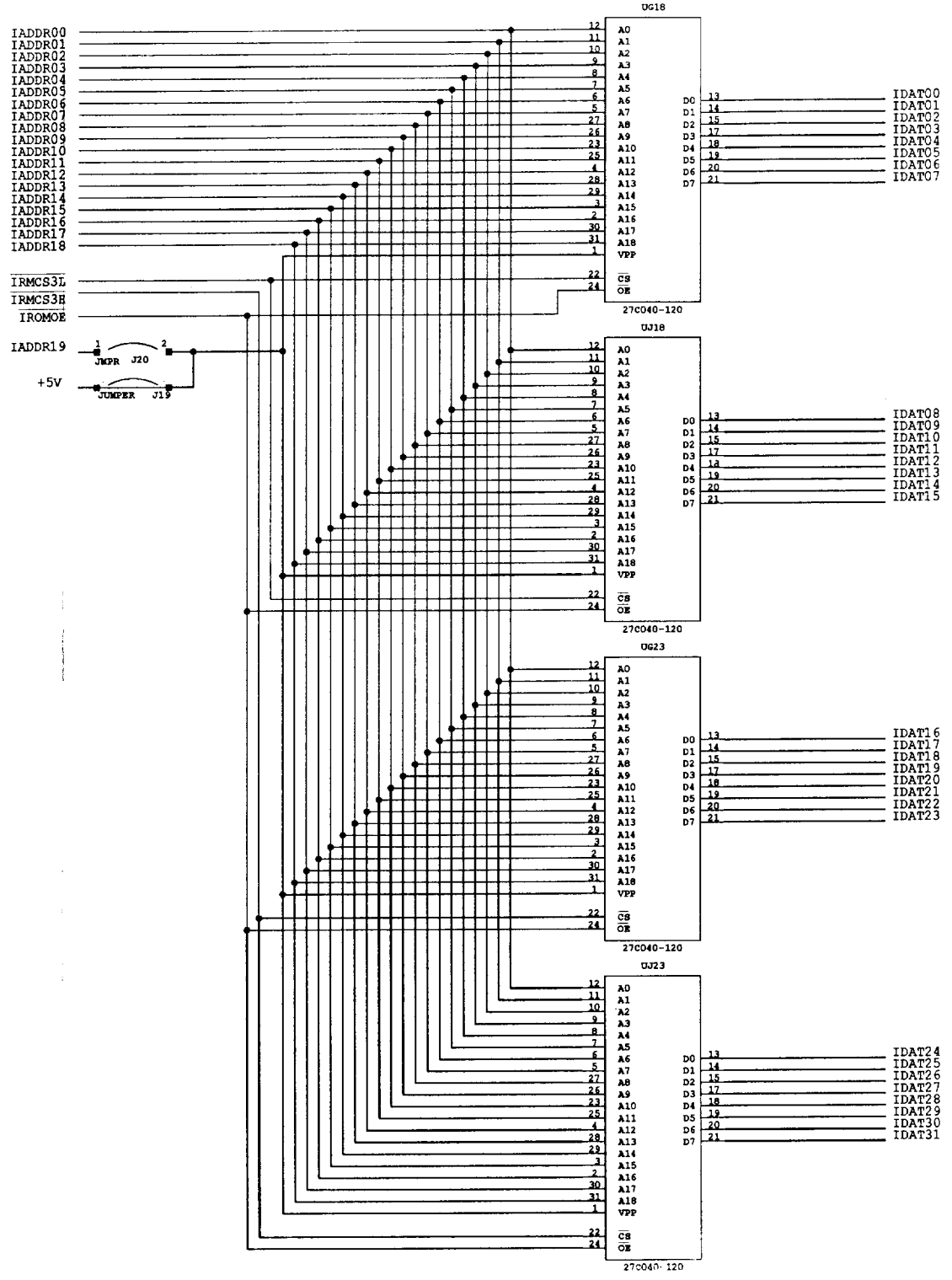


BANK 3

CPU BOARD
Sheet 12 of 22

INFORMATION CONTAINED HEREIN IS CONFIDENTIAL PROPERTY AND MAY NOT BE USED OR DISCLOSED WITHOUT EXPRESS WRITTEN CONSENT FROM THE COMPANY.

| | | | |
|---|---|---|---|
| PROJECT ENG. REM | | FIRST PROJ. NO 40023 | DATE 09DEC92 |
| DWN. BY REM | DATE | FIRST USEAGE A-14816 | DATE 09DEC92 |
| CHECKED REM | DATE | CURRENT PROJECT 40023 | DATE 19AUG93 |
| APPROVED | DATE | SHEET 12 | OF 22 |

WILLIAMS ELECTRONICS AND GAMES INC.
MIDWAY MANUFACTURING COMPANY
3401 N. CALIFORNIA AVE. CHICAGO IL.

TITLE
IMAGE ROM BANK 2/BANK 3

PART NO. 16-9470 REV. 5

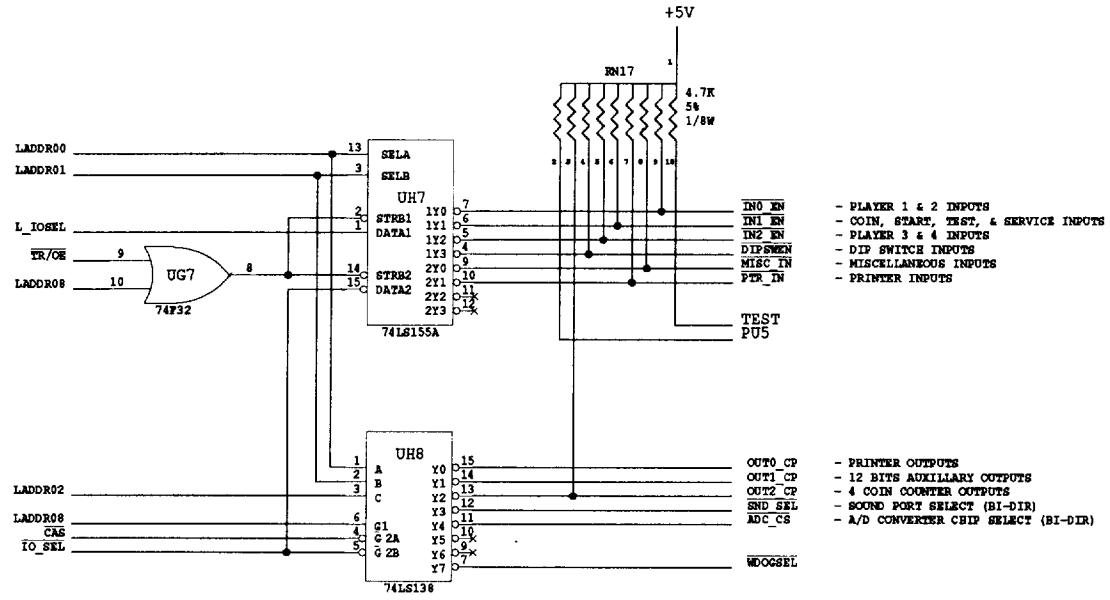


CPU BOARD
Sheet 13 of 22

19 AUG. 1993 REM - CHANGED UG7 74LS32 TO 74F32.

INFORMATION CONTAINED HEREIN IS CONFIDENTIAL PROPERTY AND MAY NOT BE USED OR DISCLOSED WITHOUT EXPRESS WRITTEN CONSENT FROM THE COMPANY.

| | | | |
|---|---|---|---|
| PROJECT ENG. REM | FIRST PROJ. NO 40023 | DATE 09DEC92 | WILLIAMS ELECTRONICS AND GAMES INC.<br>MIDWAY MANUFACTURING COMPANY<br>3401 N. CALIFORNIA AVE. CHICAGO IL. |
| DWN. BY REM | DATE | FIRST USEAGE A-14816 | DATE 09DEC92 |
| CHECKED REM | DATE | CURRENT PROJECT 40023 | DATE 19AUG93 |
| APPROVED | DATE | SHEET 13 | OF 22 |

TITLE: I/O DECODING

PART NO. 16-9470 REV. 5

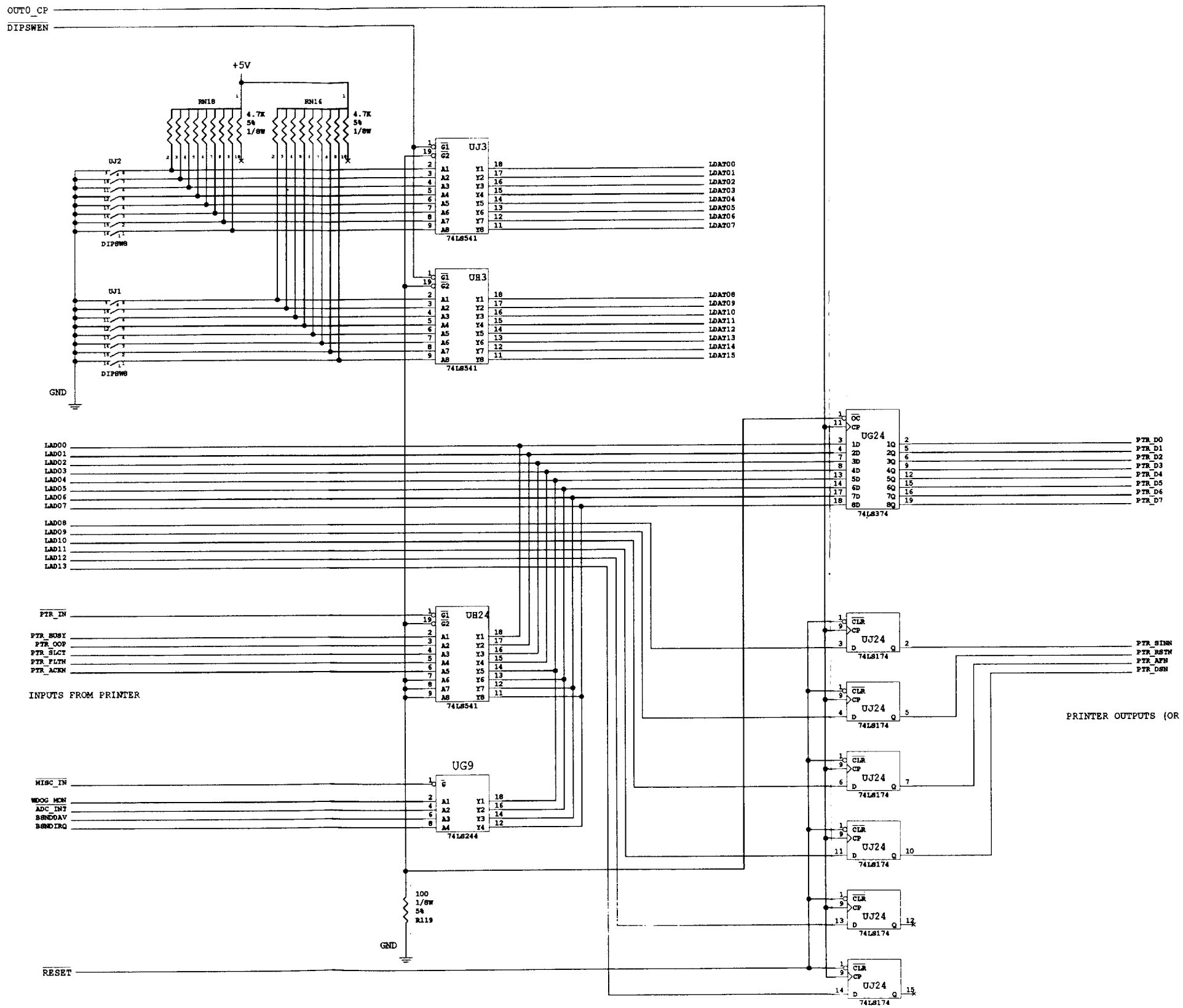


CPU BOARD
Sheet 14 of 22

INFORMATION CONTAINED HEREIN IS CONFIDENTIAL PROPERTY AND MAY NOT BE USED OR DISCLOSED WITHOUT EXPRESS WRITTEN CONSENT FROM THE COMPANY.

| | | | |
|---|---|---|---|
| PROJECT ENG. REM | FIRST PROJ. NO 40023 | DATE 09DEC92 | WILLIAMS ELECTRONICS AND GAMES INC.<br>MIDWAY MANUFACTURING COMPANY<br>3401 N. CALIFORNIA AVE. CHICAGO IL. |
| DWN. BY REM | DATE | FIRST USEAGE A-14816 | DATE 09DEC92 |
| CHECKED REM | DATE | CURRENT PROJECT 40023 | DATE 19AUG93 |
| APPROVED | DATE | SHEET 14 OF 22 | PART NO. 16-9470 REV. 5 |

TITLE: MISC. I/O AND DIP SWITCH

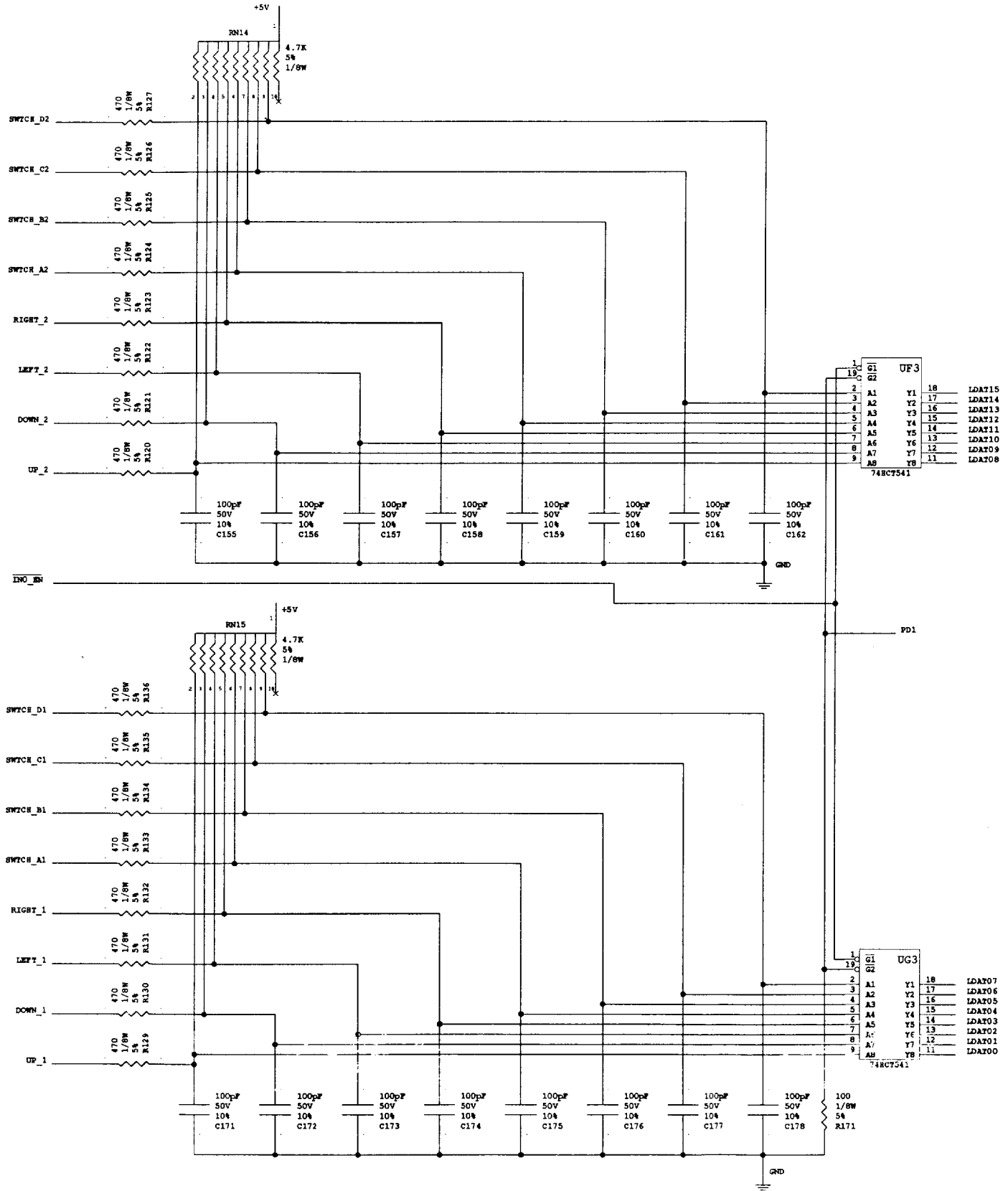


CPU BOARD
Sheet 15 of 22

INFORMATION CONTAINED HEREIN IS CONFIDENTIAL PROPERTY AND MAY NOT BE USED OR DISCLOSED WITHOUT EXPRESS WRITTEN CONSENT FROM THE COMPANY.

| | | | | |
|---|---|---|---|---|
| PROJECT ENG. REM | | FIRST PROJ. NO 40023 | DATE 09DEC92 | WILLIAMS ELECTRONICS AND GAMES INC.<br>MIDWAY MANUFACTURING COMPANY<br>3401 N. CALIFORNIA AVE. CHICAGO IL. |
| DWN. BY REM | DATE | FIRST USEAGE A-14816 | DATE 09DEC92 | TITLE<br>PLAYER 1/PLAYER 2 INPUTS |
| CHECKED REM | DATE | CURRENT PROJECT 40023 | DATE 19AUG93 | |
| APPROVED | DATE | SHEET 15 | OF 22 | PART NO. 16-9470 REV. 5 |

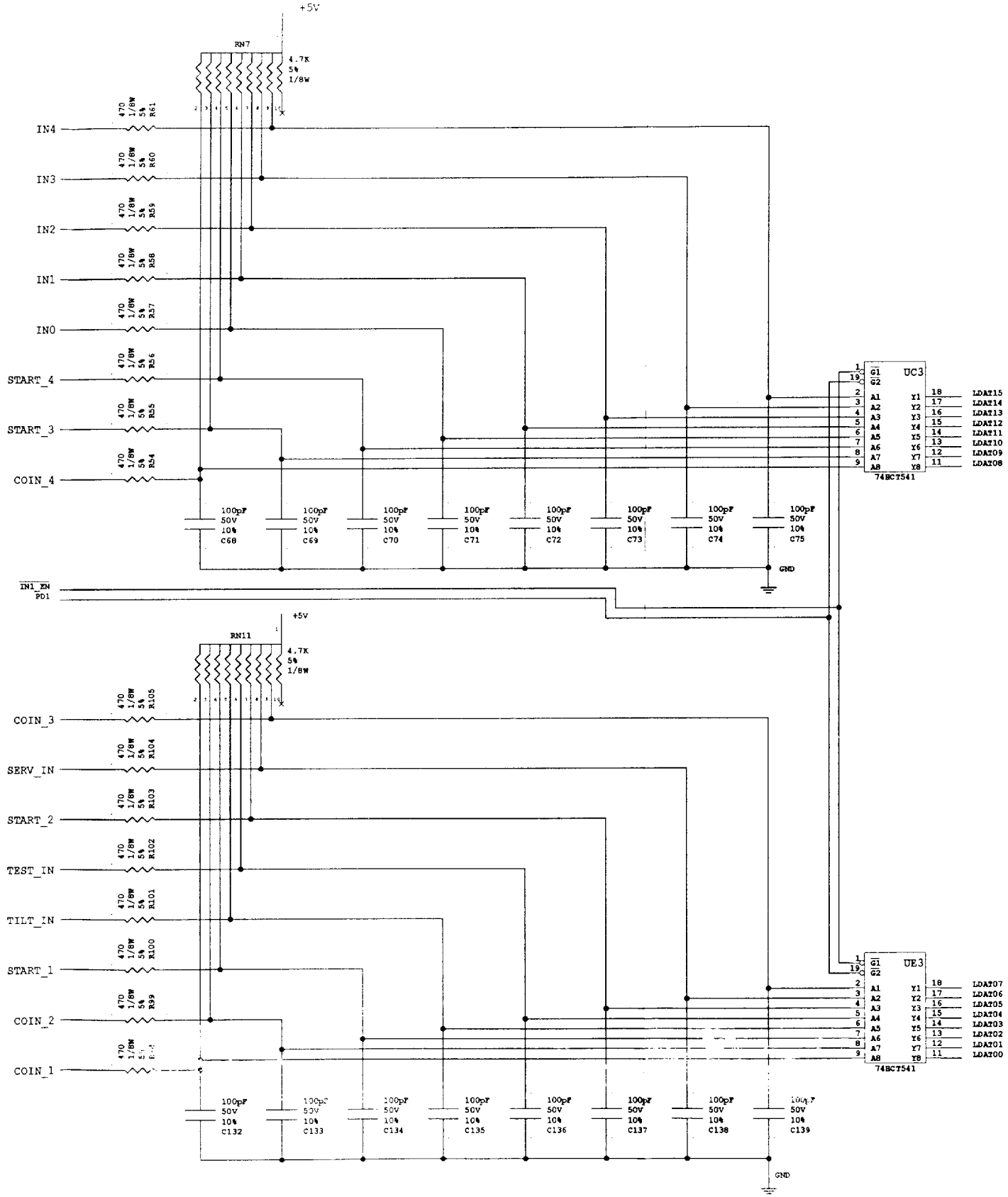


CPU BOARD
Sheet 16 of 22

INFORMATION CONTAINED HEREIN IS CONFIDENTIAL PROPERTY AND MAY NOT BE USED OR DISCLOSED WITHOUT EXPRESS WRITTEN CONSENT FROM THE COMPANY.

| | | | | | |
|---|---|---|---|---|---|
| PROJECT ENG. | | FIRST PROJ. NO | DATE | WILLIAMS ELECTRONICS AND GAMES INC. | |
| REM | | 40023 | 09DEC92 | MIDWAY MANUFACTURING COMPANY | |
| DWN. BY | DATE | FIRST USEAGE | DATE | 3401 N. CALIFORNIA AVE. CHICAGO IL. | |
| REM | | A-14816 | 09DEC92 | TITLE | |
| CHECKED | DATE | CURRENT PROJECT | DATE | EXTRA INPUTS/COIN/START | |
| REM | | 40023 | 19AUG93 | | |
| APPROVED | DATE | SHEET 16 | OF 22 | PART NO. 16-9470 | REV. 5 |

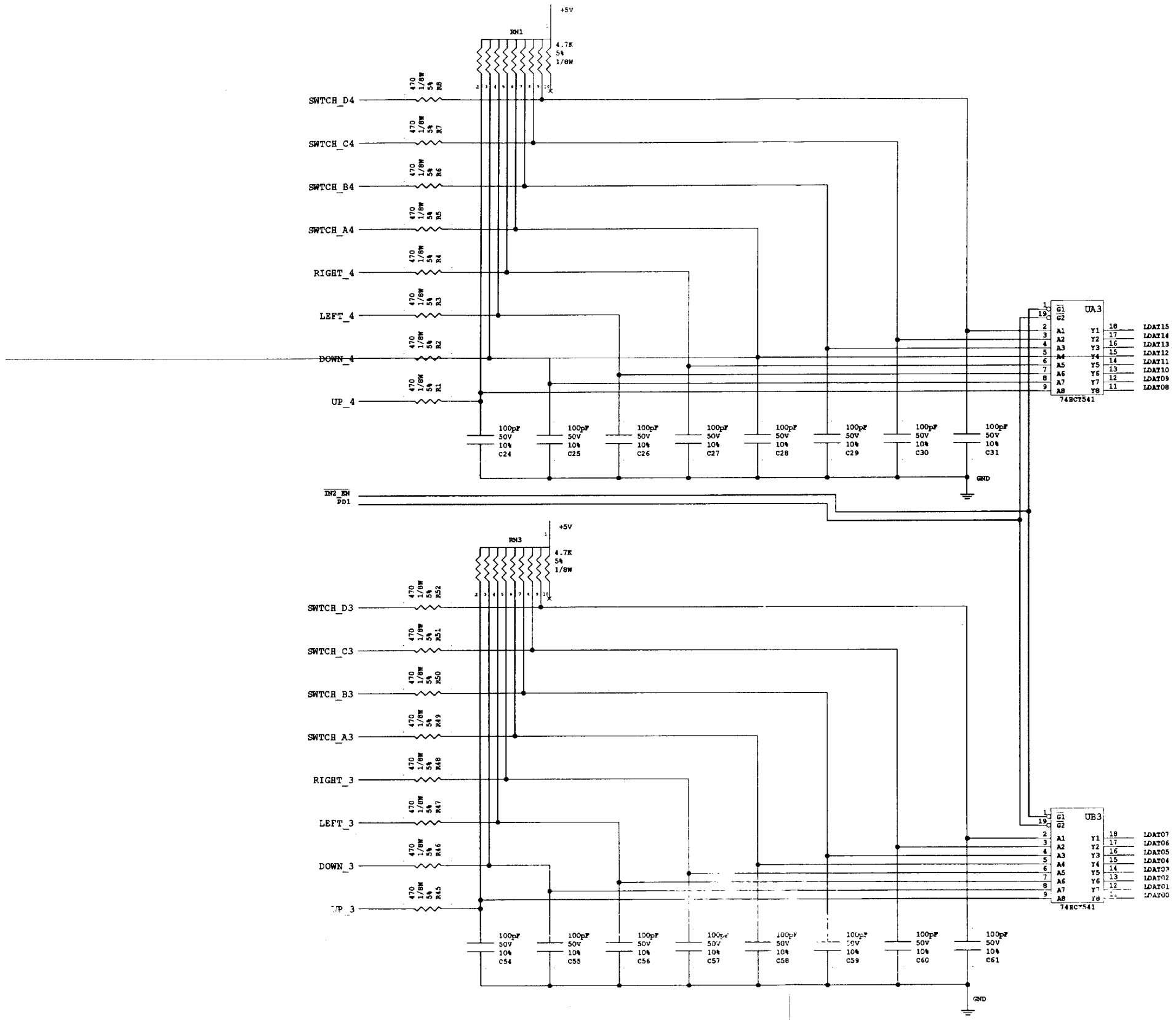


CPU BOARD
Sheet 17 of 22

INFORMATION CONTAINED HEREIN IS CONFIDENTIAL PROPERTY AND MAY NOT BE USED OR DISCLOSED WITHOUT EXPRESS WRITTEN CONSENT FROM THE COMPANY.

| | | | |
|---|---|---|---|
| PROJECT ENG. REM | FIRST PROJ. NO 40023 | DATE 09DEC92 | WILLIAMS ELECTRONICS AND GAMES INC. MIDWAY MANUFACTURING COMPANY 3401 N. CALIFORNIA AVE. CHICAGO IL. |
| DWN. BY REM | FIRST USEAGE A-14816 | DATE 09DEC92 | TITLE PLAYER 3/PLAYER 4 INPUTS |
| CHECKED REM | CURRENT PROJECT 40023 | DATE 19AUG93 | |
| APPROVED | DATE | SHEET 17 OF 22 | PART NO. 16-9470 REV. 5 |

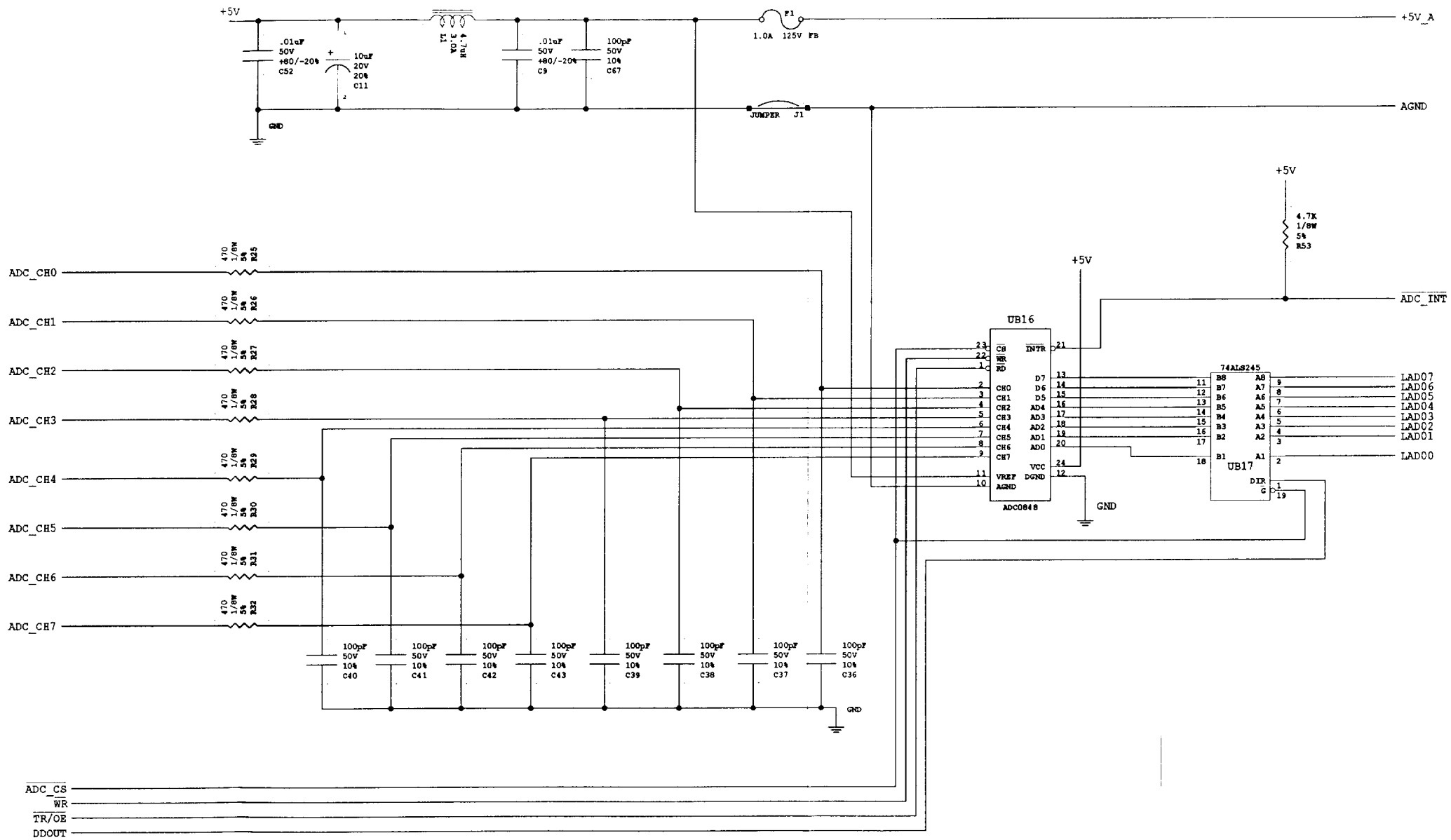


CPU BOARD
Sheet 18 of 22

INFORMATION CONTAINED HEREIN IS CONFIDENTIAL PROPERTY AND MAY NOT BE USED OR DISCLOSED WITHOUT EXPRESS WRITTEN CONSENT FROM THE COMPANY.

| | | | |
|---|---|---|---|
| PROJECT ENG. REM | FIRST PROJ. NO 40023 | DATE 09DEC92 | WILLIAMS ELECTRONICS AND GAMES INC. MIDWAY MANUFACTURING COMPANY 3401 N. CALIFORNIA AVE. CHICAGO IL. |
| DWN. BY REM | DATE | FIRST USEAGE A-14816 | DATE 09DEC92 |
| CHECKED REM | DATE | CURRENT PROJECT 40023 | DATE 19AUG93 |
| APPROVED | DATE | SHEET 18 OF 22 | TITLE A/D |
| | | | PART NO. 16-9470 REV. 5 |

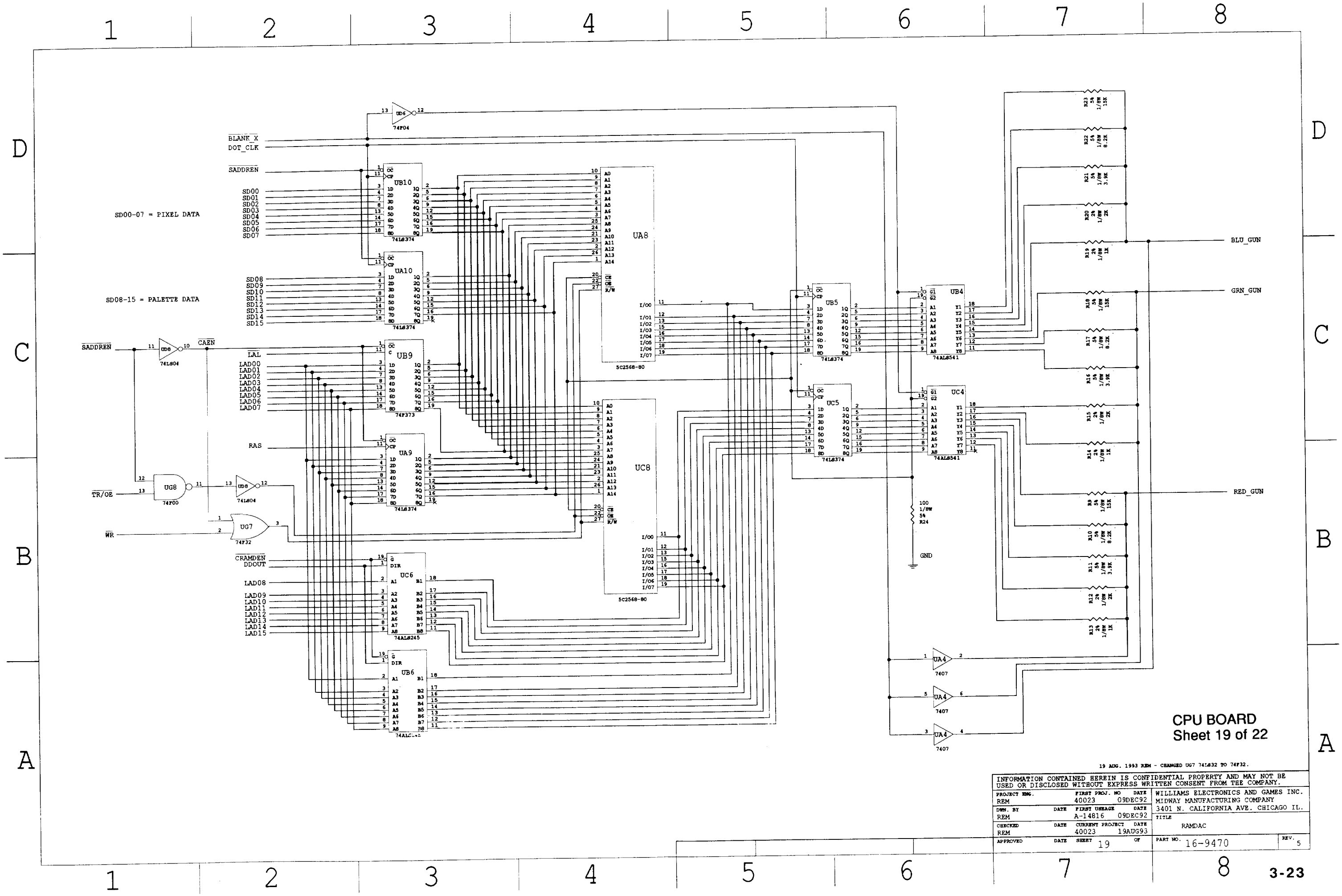

BLANK_X
DOT_CLK
SADDREN
SD00-07 = PIXEL DATA
SD08-15 = PALETTE DATA
SD00
SD01
SD02
SD03
SD04
SD05
SD06
SD07
SD08
SD09
SD10
SD11
SD12
SD13
SD14
SD15
CAEN
LAL
LAD00
LAD01
LAD02
LAD03
LAD04
LAD05
LAD06
LAD07
RAS
TR/OE
WR
CRAMDEN
DDOUT
LAD08
LAD09
LAD10
LAD11
LAD12
LAD13
LAD14
LAD15
UB10
UA10
UB9
UA9
UC6
UB6
UA8
UC8
UB5
UC5
UB4
UC4
UG8
UG7
UA4
74F04
74LS374
74F373
74LS04
74F00
74F32
74ALS245
5C2568-80
74ALS541
7407
GND
BLU_GUN
GRN_GUN
RED_GUN
CPU BOARD
Sheet 19 of 22
19 AUG. 1993 REM - CHANGED UG7 74LS32 TO 74F32.
INFORMATION CONTAINED HEREIN IS CONFIDENTIAL PROPERTY AND MAY NOT BE USED OR DISCLOSED WITHOUT EXPRESS WRITTEN CONSENT FROM THE COMPANY.
PROJECT ENG. REM
FIRST PROJ. NO 40023 DATE 09DEC92
DWN. BY REM DATE
FIRST USEAGE A-14816 DATE 09DEC92
CHECKED REM DATE
CURRENT PROJECT 40023 DATE 19AUG93
APPROVED DATE
SHEET 19 OF
WILLIAMS ELECTRONICS AND GAMES INC.
MIDWAY MANUFACTURING COMPANY
3401 N. CALIFORNIA AVE. CHICAGO IL.
TITLE RAMDAC
PART NO. 16-9470
REV. 5

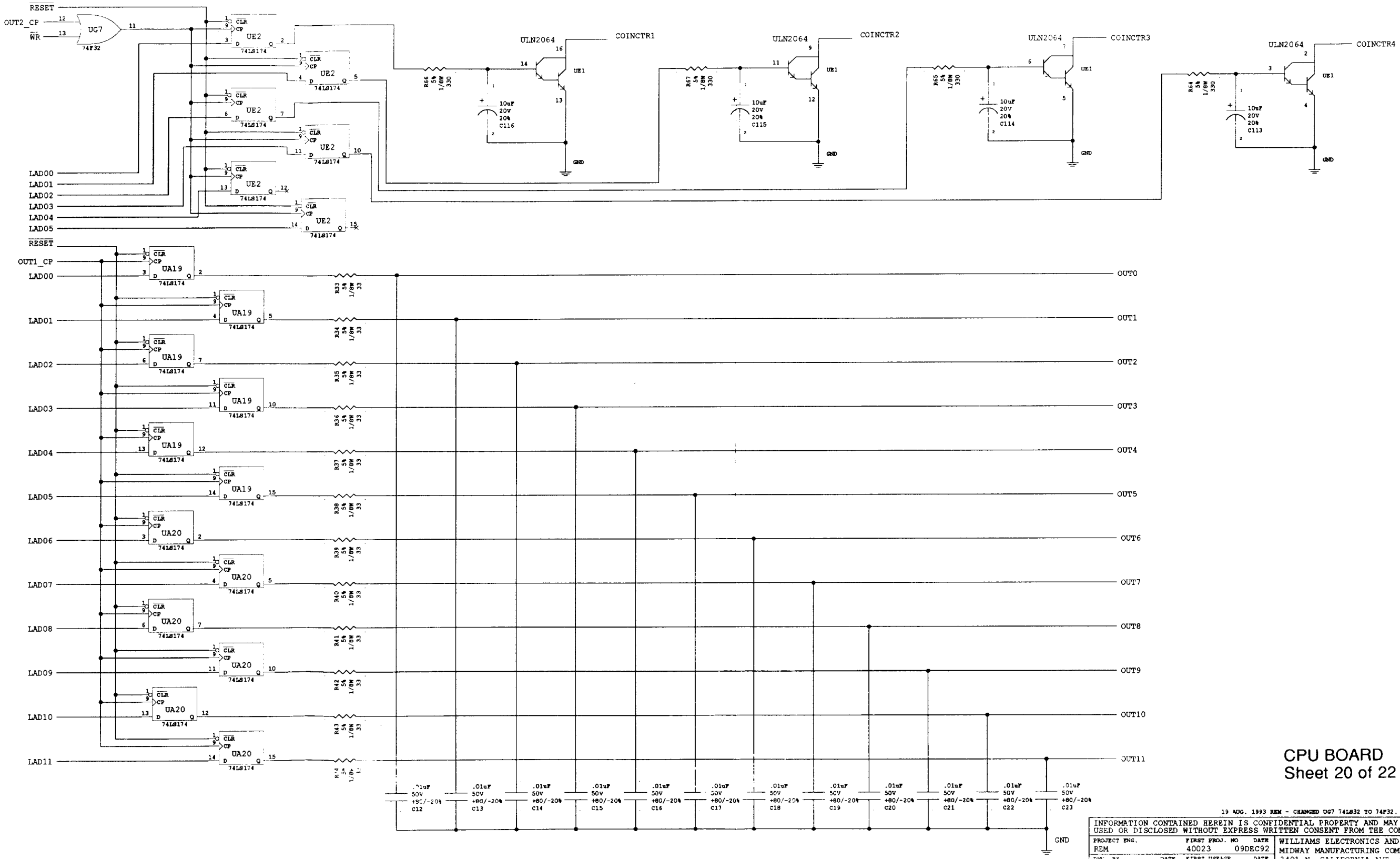


CPU BOARD
Sheet 20 of 22

19 AUG. 1993 REM - CHANGED UG7 74LS32 TO 74F32.

INFORMATION CONTAINED HEREIN IS CONFIDENTIAL PROPERTY AND MAY NOT BE USED OR DISCLOSED WITHOUT EXPRESS WRITTEN CONSENT FROM THE COMPANY.

| | | | |
|---|---|---|---|
| PROJECT ENG. REM | | FIRST PROJ. NO 40023 | DATE 09DEC92 |
| DSN. BY REM | DATE | FIRST USEAGE A-14816 | DATE 09DEC92 |
| CHECKED REM | DATE | CURRENT PROJECT 40023 | DATE 19AUG93 |
| APPROVED | DATE | SHEET 20 | OF 22 |

WILLIAMS ELECTRONICS AND GAMES INC.
MIDWAY MANUFACTURING COMPANY
3401 N. CALIFORNIA AVE. CHICAGO IL.

TITLE: OUTPUTS

PART NO. 16-9470 REV. 5

SPARE GATES

PU1

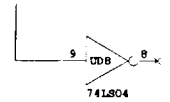


PU2

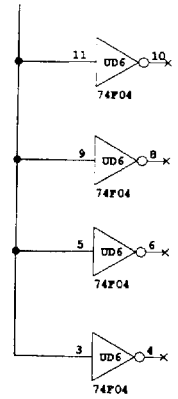


PU3

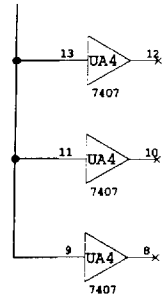


PU4

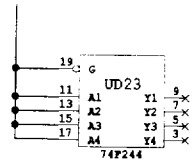


PU5

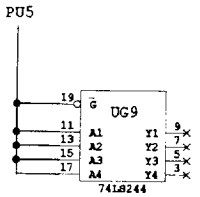


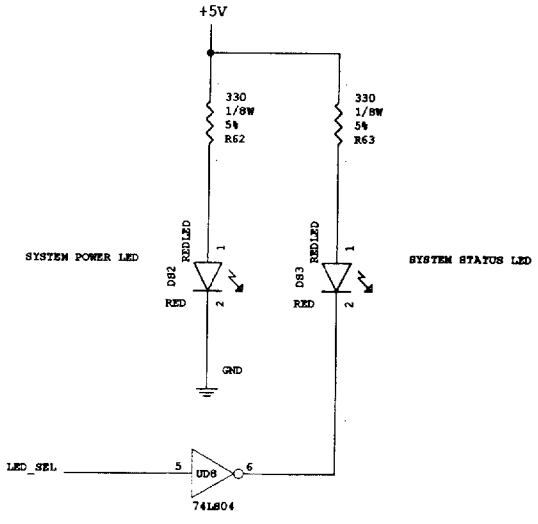


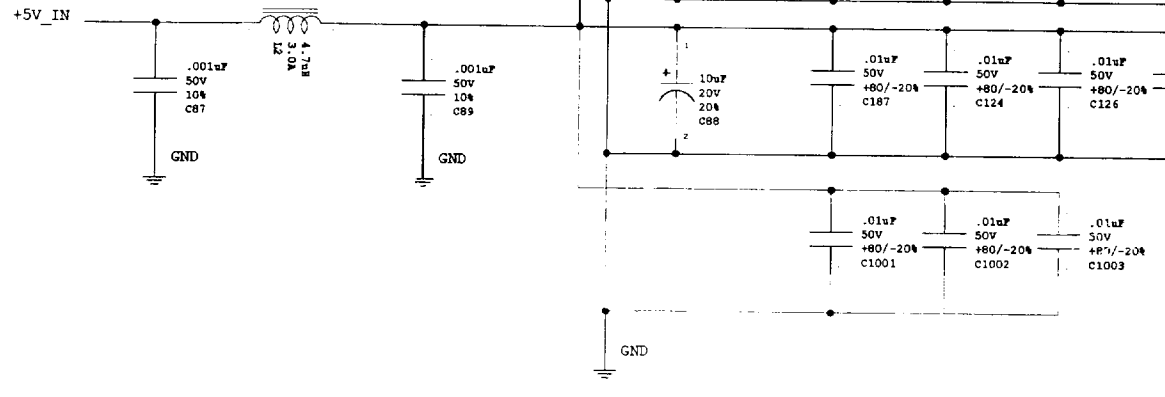





CPU BOARD
Sheet 21 of 22

25 MAY 1993 REM - ADDED C1001, C1002, C1003

INFORMATION CONTAINED HEREIN IS CONFIDENTIAL PROPERTY AND MAY NOT BE USED OR DISCLOSED WITHOUT EXPRESS WRITTEN CONSENT FROM THE COMPANY.

| | | | |
|---|---|---|---|
| PROJECT ENG. REM | FIRST PROJ. NO 40023 | DATE 09DEC92 | WILLIAMS ELECTRONICS AND GAMES INC. MIDWAY MANUFACTURING COMPANY 3401 N. CALIFORNIA AVE. CHICAGO IL. |
| DWN. BY REM | DATE | FIRST USEAGE A-14816 | DATE 09DEC92 |
| CHECKED REM | DATE | CURRENT PROJECT 40023 | DATE 19AUG93 |
| APPROVED | DATE | SHEET 21 OF 22 | PART NO. 16-9470 REV. 5 |

TITLE: POWER

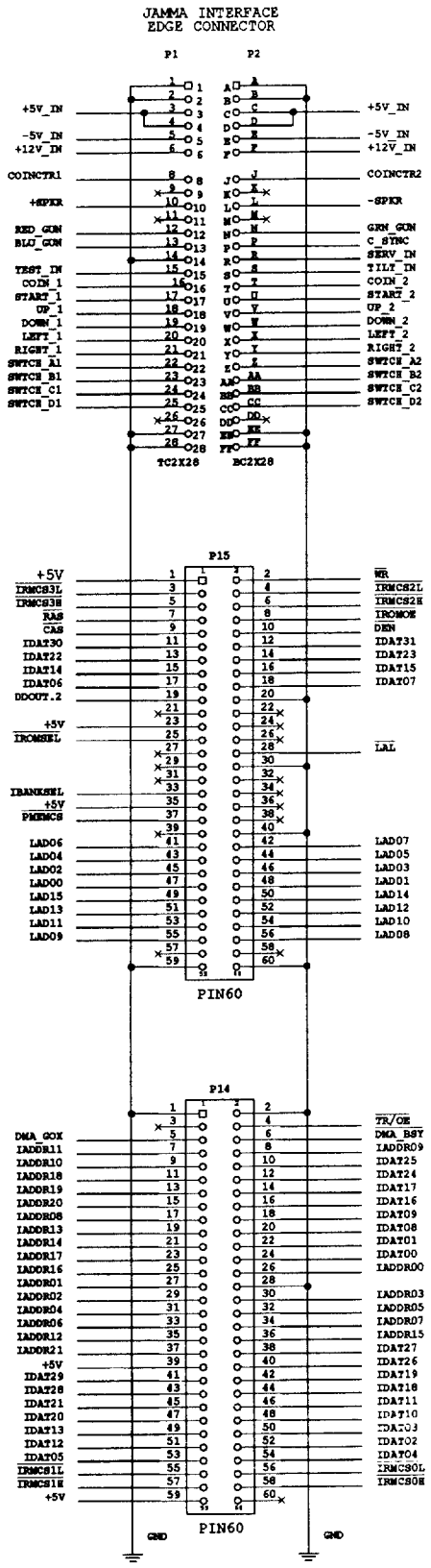


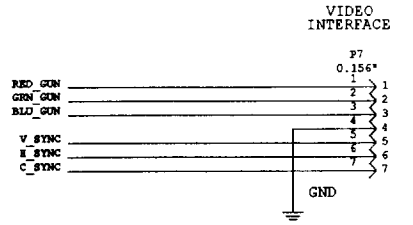


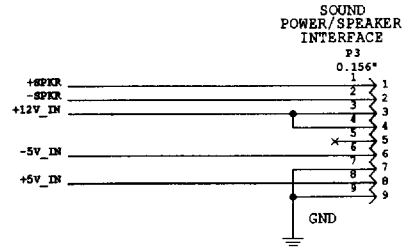


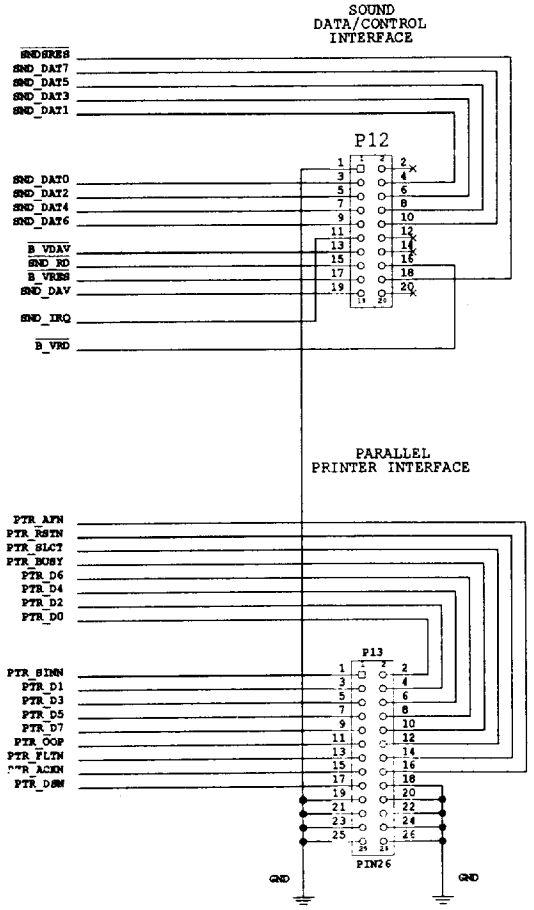


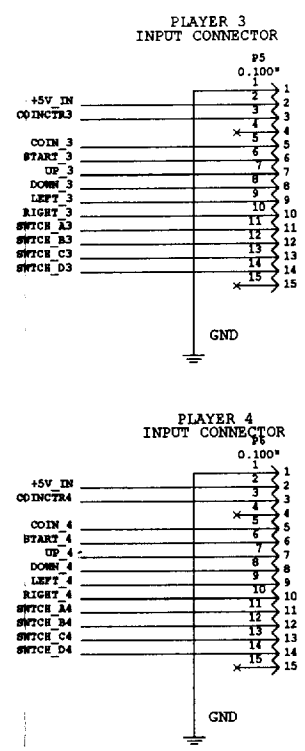


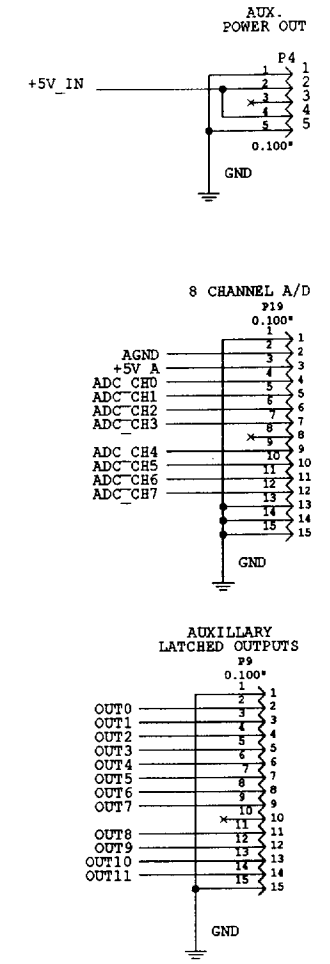


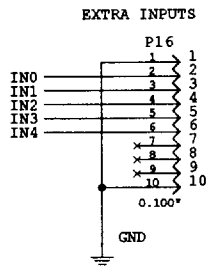


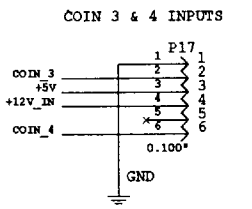


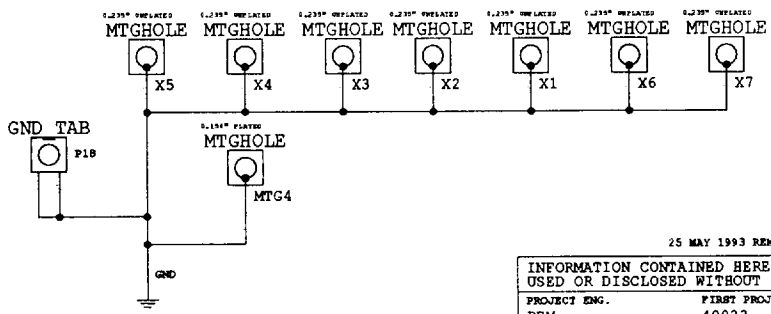


0.250" SOLDER TAB FOR SOUND BOARD GROUND STRAP.

# CPU BOARD
Sheet 22 of 22

25 MAY 1993 REM - ADDED PWR, GND, IROMSEL~, & IBANKSEL TO P14 & P15.

INFORMATION CONTAINED HEREIN IS CONFIDENTIAL PROPERTY AND MAY NOT BE USED OR DISCLOSED WITHOUT EXPRESS WRITTEN CONSENT FROM THE COMPANY.

| | | | |
|---|---|---|---|
| PROJECT ENG. REM | | FIRST PROJ. NO 40023 | DATE 09DEC92 |
| DWN. BY REM | DATE | FIRST USEAGE A-14816 | DATE 09DEC92 |
| CHECKED REM | DATE | CURRENT PROJECT 40023 | DATE 19AUG93 |
| APPROVED | DATE | SHEET 22 | OF 22 |

WILLIAMS ELECTRONICS AND GAMES INC.
MIDWAY MANUFACTURING COMPANY
3401 N. CALIFORNIA AVE. CHICAGO IL.

TITLE: CONNECTORS

PART NO. 16-9470 REV. 5

## IROM ADDRESS BUFFERS

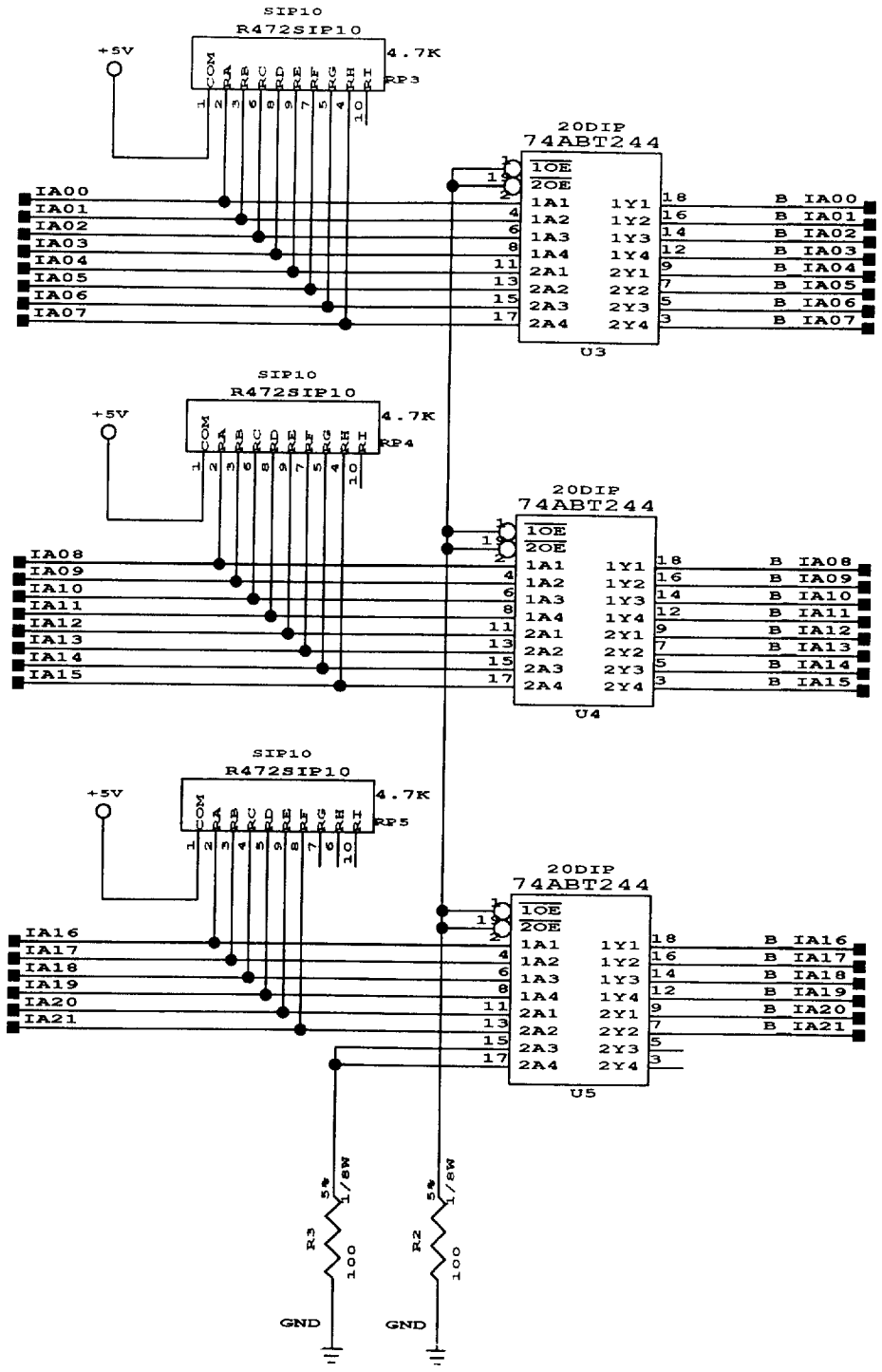


## IROM CS GENERATOR

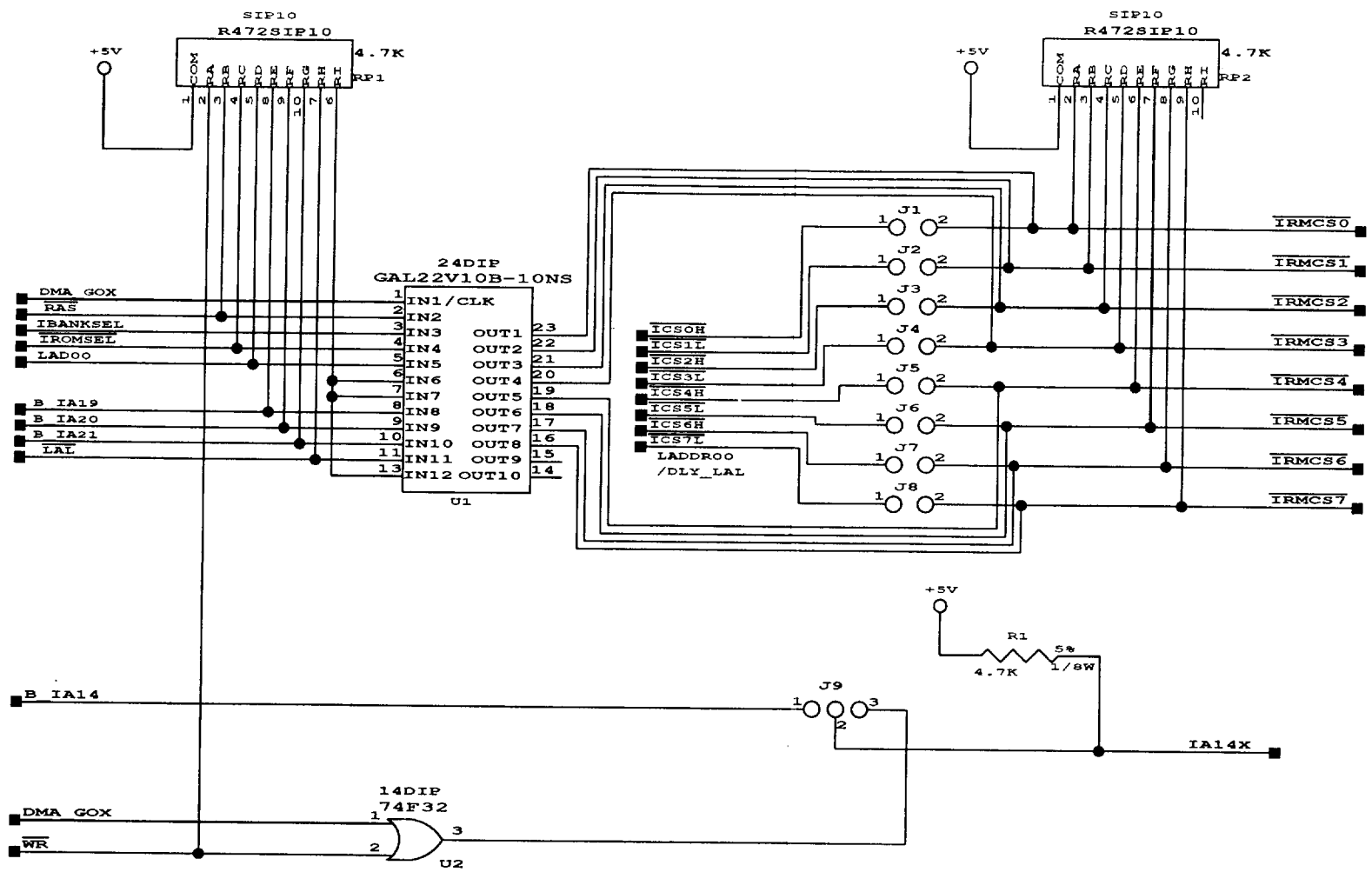


## MEMORY EXPANSION BOARD
Sheet 1 of 5

| ECN | CHANGE | DATE |
|---|---|---|

INFORMATION CONTAINED HEREIN IS CONFIDENTIAL PROPERTY AND MAY NOT BE USED OR DISCLOSED WITHOUT EXPRESS WRITTEN CONSENT FROM THE COMPANY.

| | | |
|---|---|---|
| PROJECT ENG. | 1ST PROJ. NO. DATE | WILLIAMS ELECTRONICS GAMES<br>MIDWAY MANUFACTURING CO.<br>3401 N. CALIFORNIA AVENUE<br>CHICAGO ILLINOIS USA |
| DWN. BY DATE<br>REM 8-20-1993_6:34 | 1ST USEAGE DATE | TITLE<br>13664-01<br>PLD/CONTROL<br>& IA BUFFERS |
| CHECKED DATE | CURRENT PROJ. DATE | |
| APPROVED DATE | SHEET OF<br>1 5 | PART NO. REV. 1 |

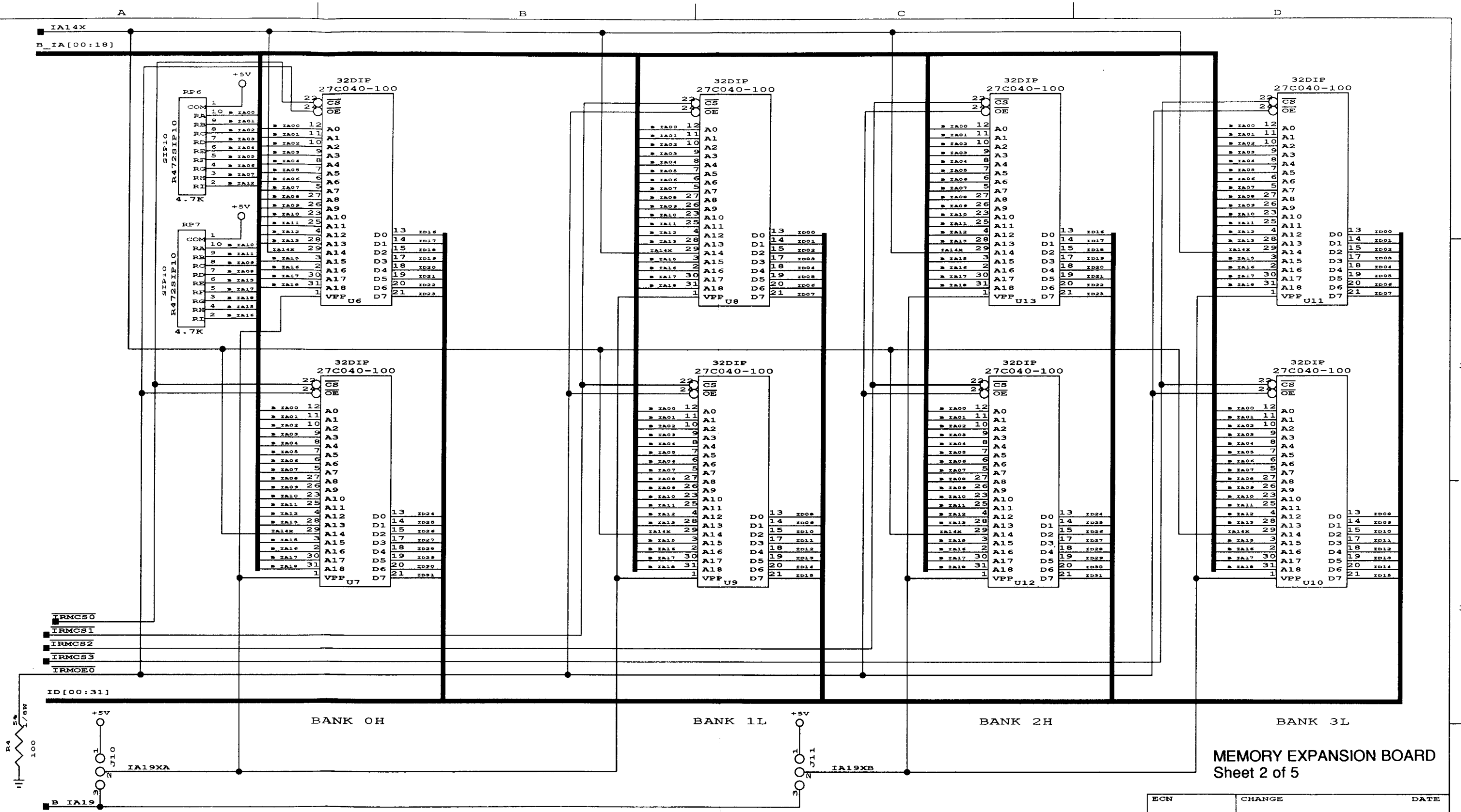


Jumper J10 & J11 pins 1-2 for 4 Mbit EPROM.
Jumper J10 & J11 pins 2-3 for 8 Mbit EPROM.
Green wire J10 & J11 pins 2 to B_IA14 for 4 Mbit RAM.

# MEMORY EXPANSION BOARD
Sheet 2 of 5

| ECN | CHANGE | DATE |
|---|---|---|

INFORMATION CONTAINED HEREIN IS CONFIDENTIAL PROPERTY AND MAY NOT BE USED OR DISCLOSED WITHOUT EXPRESS WRITTEN CONSENT FROM THE COMPANY.

| | | |
|---|---|---|
| PROJECT ENG. | 1ST PROJ. NO. DATE | WILLIAMS ELECTRONICS GAMES<br>MIDWAY MANUFACTURING CO.<br>3401 N. CALIFORNIA AVENUE<br>CHICAGO ILLINOIS USA |
| DWN. BY DATE<br>REM 7-26-1993_15:15 | 1ST USEAGE DATE | TITLE<br>13664-01<br>IMAGE ROM BANK 0/BANK 1 |
| CHECKED DATE | CURRENT PROJ. DATE | |
| APPROVED DATE | SHEET 2 OF 5 | PART NO. / REV. 1 |

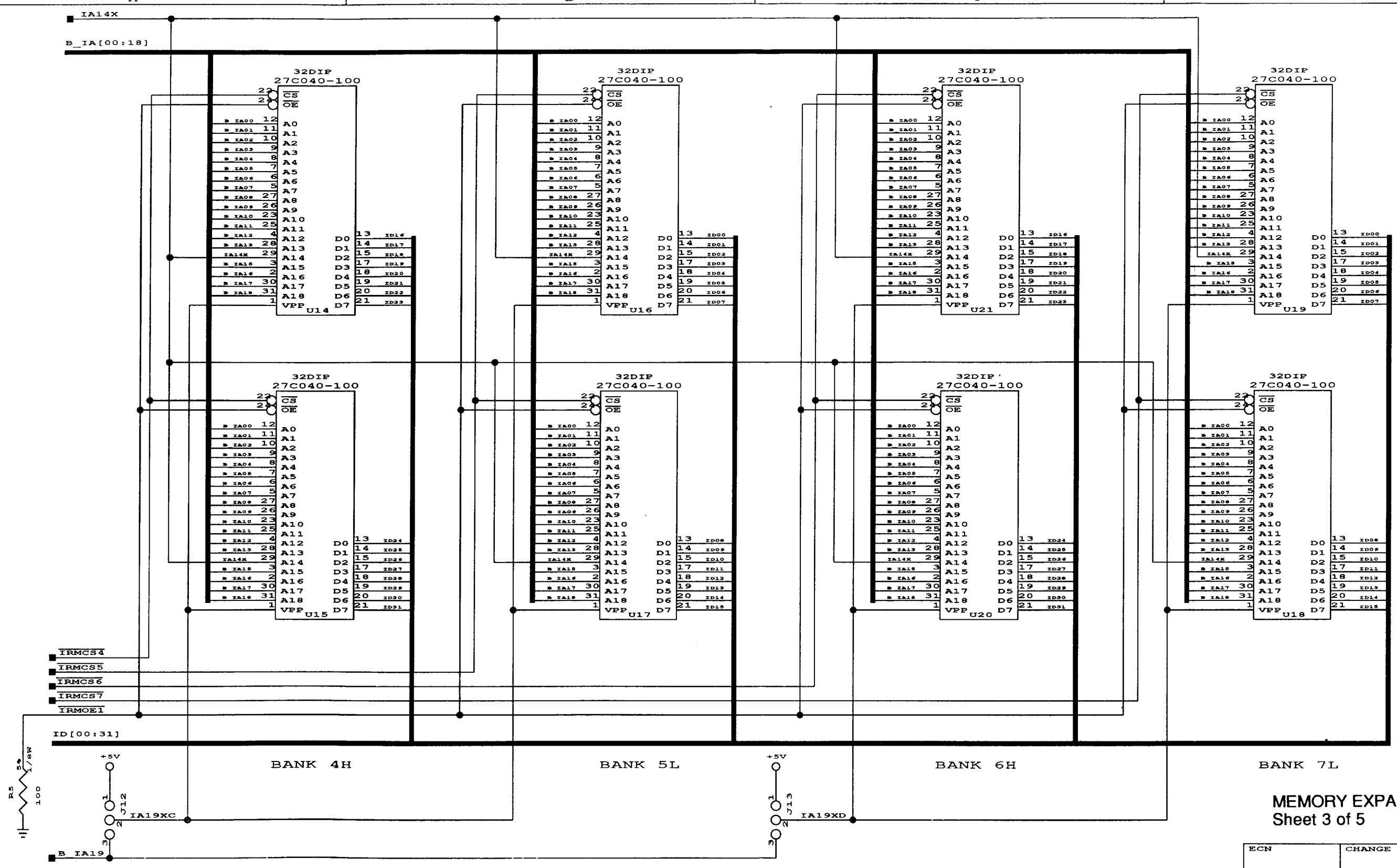


Jumper J12 & J13 pins 1-2 for 4 Mbit EPROM.
Jumper J12 & J13 pins 2-3 for 8 Mbit EPROM.
Green wire J12 & J13 pins 2 to B_IA14 for 4 Mbit RAM.

MEMORY EXPANSION BOARD
Sheet 3 of 5

| ECN | CHANGE | DATE |
|---|---|---|

INFORMATION CONTAINED HEREIN IS CONFIDENTIAL PROPERTY AND MAY NOT BE USED OR DISCLOSED WITHOUT EXPRESS WRITTEN CONSENT FROM THE COMPANY.

| | | |
|---|---|---|
| PROJECT ENG. | 1ST PROJ. NO. DATE | WILLIAMS ELECTRONICS GAMES<br>MIDWAY MANUFACTURING CO.<br>3401 N. CALIFORNIA AVENUE<br>CHICAGO ILLINOIS USA |
| DWN. BY DATE<br>REM 7-26-1993_15:15 | 1ST USEAGE DATE | TITLE<br>13664-01<br>IMAGE ROM BANK 0/BANK 1 |
| CHECKED DATE | CURRENT PROJ. DATE | |
| APPROVED DATE | SHEET 3 OF 5 | PART NO. / REV. 1 |

## SPARE GATES

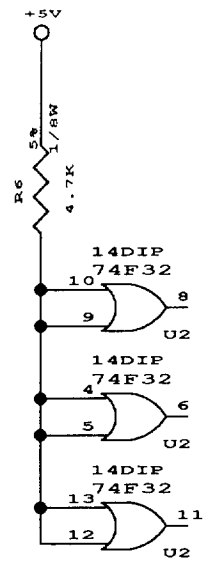


## BYPASS CAPS

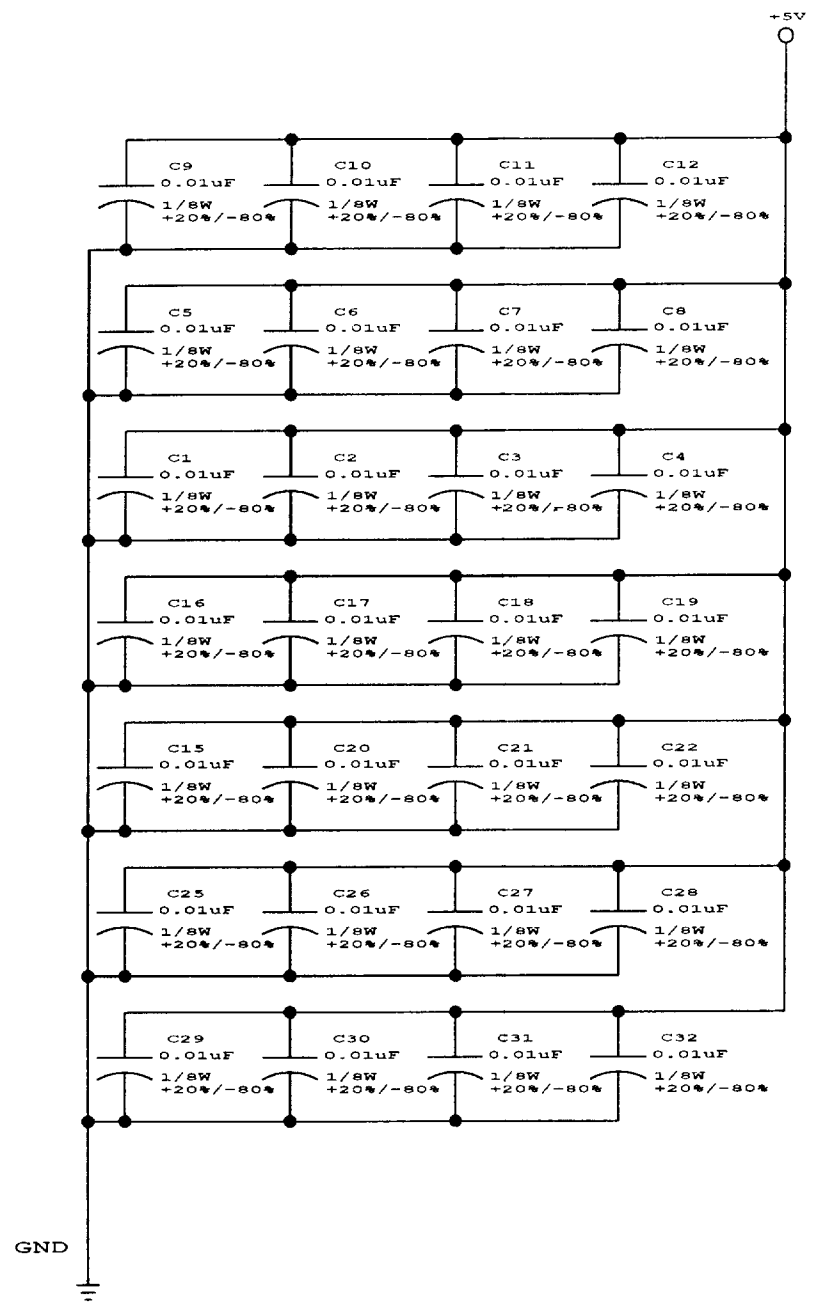


## FILTER CAPS

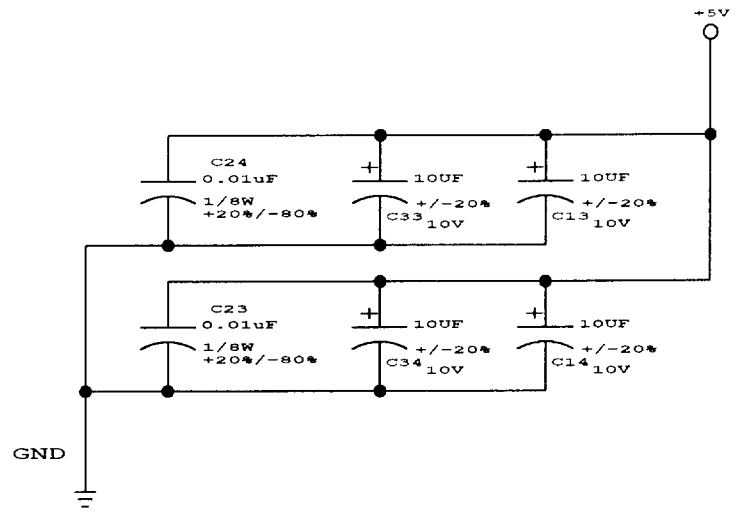


MEMORY EXPANSION BOARD
Sheet 4 of 5

| ECN | CHANGE | DATE |
|---|---|---|

INFORMATION CONTAINED HEREIN IS CONFIDENTIAL PROPERTY AND MAY NOT BE USED OR DISCLOSED WITHOUT EXPRESS WRITTEN CONSENT FROM THE COMPANY.

| | | |
|---|---|---|
| PROJECT ENG. | 1ST PROJ. NO. DATE | WILLIAMS ELECTRONICS GAMES<br>MIDWAY MANUFACTURING CO.<br>3401 N. CALIFORNIA AVENUE<br>CHICAGO ILLINOIS USA |
| DWN. BY DATE<br>REM 7-26-1993_15:15 | 1ST USEAGE DATE | TITLE 13664-01<br>CAPS/SPARE GATES |
| CHECKED DATE | CURRENT PROJ. DATE | |
| APPROVED DATE | SHEET OF<br>4 5 | PART NO. / REV. 1 |

# T-UNIT EXPANSION CONNECTORS

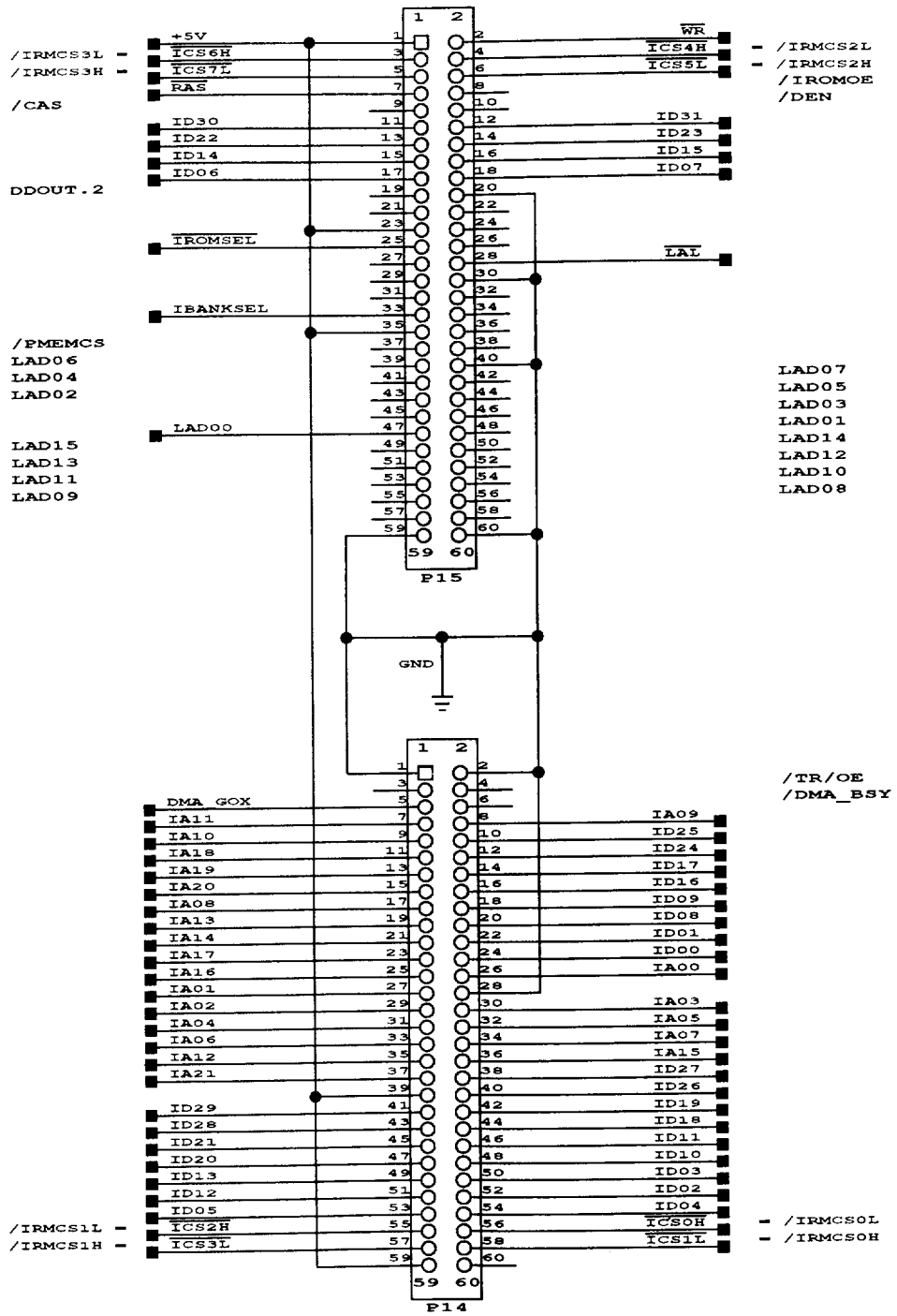


| TUNIT CPU BOARD | EXPANSION CARD |
|---|---|
| /IRMCS0L = | /ICS0H = /IRMSC0 |
| /IRMCS0H = | /ICS1L = /IRMSC1 |
| /IRMCS1L = | /ICS2H = /IRMSC2 |
| /IRMCS1H = | /ICS3L = /IRMSC3 |
| /IRMCS2L = | /ICS4H = /IRMSC4 |
| /IRMCS2H = | /ICS5L = /IRMSC5 |
| /IRMCS3L = | /ICS6H = /IRMSC6 |
| /IRMCS3H = | /ICS7L = /IRMSC7 |

## MEMORY EXPANSION BOARD
Sheet 5 of 5

| ECN | CHANGE | DATE |
|---|---|---|
| | | |

INFORMATION CONTAINED HEREIN IS CONFIDENTIAL PROPERTY AND MAY NOT BE USED OR DISCLOSED WITHOUT EXPRESS WRITTEN CONSENT FROM THE COMPANY.

| | | |
|---|---|---|
| PROJECT ENG. | 1ST PROJ. NO. DATE | WILLIAMS ELECTRONICS GAMES<br>MIDWAY MANUFACTURING CO.<br>3401 N. CALIFORNIA AVENUE<br>CHICAGO ILLINOIS USA |
| DWN. BY DATE<br>REM 7-26-1993_15:15 | 1ST USEAGE DATE | TITLE 13664-01<br>EXP. CONNECTORS |
| CHECKED DATE | CURRENT PROJ. DATE | |
| APPROVED DATE | SHEET 5 OF 5 | PART NO. / REV. 1 |

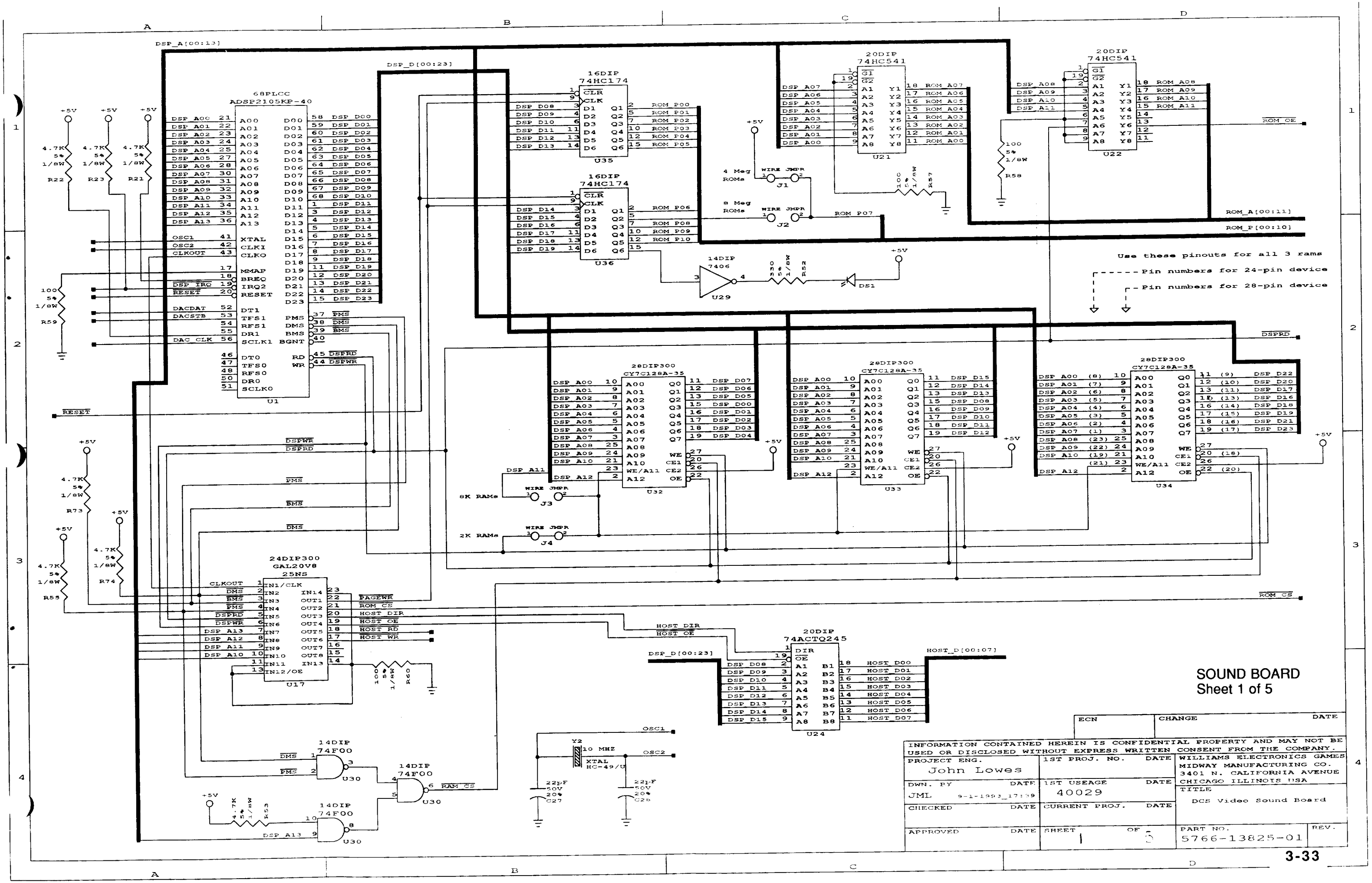


SOUND BOARD
Sheet 1 of 5

| ECN | CHANGE | DATE |
|---|---|---|

INFORMATION CONTAINED HEREIN IS CONFIDENTIAL PROPERTY AND MAY NOT BE USED OR DISCLOSED WITHOUT EXPRESS WRITTEN CONSENT FROM THE COMPANY.

| | | |
|---|---|---|
| PROJECT ENG. John Lowes | 1ST PROJ. NO. DATE | WILLIAMS ELECTRONICS GAMES MIDWAY MANUFACTURING CO. 3401 N. CALIFORNIA AVENUE CHICAGO ILLINOIS USA |
| DWN. BY JML DATE 9-1-1993_17:39 | 1ST USEAGE 40029 DATE | TITLE DCS Video Sound Board |
| CHECKED DATE | CURRENT PROJ. DATE | |
| APPROVED DATE | SHEET 1 OF 5 | PART NO. 5766-13825-01 REV. |

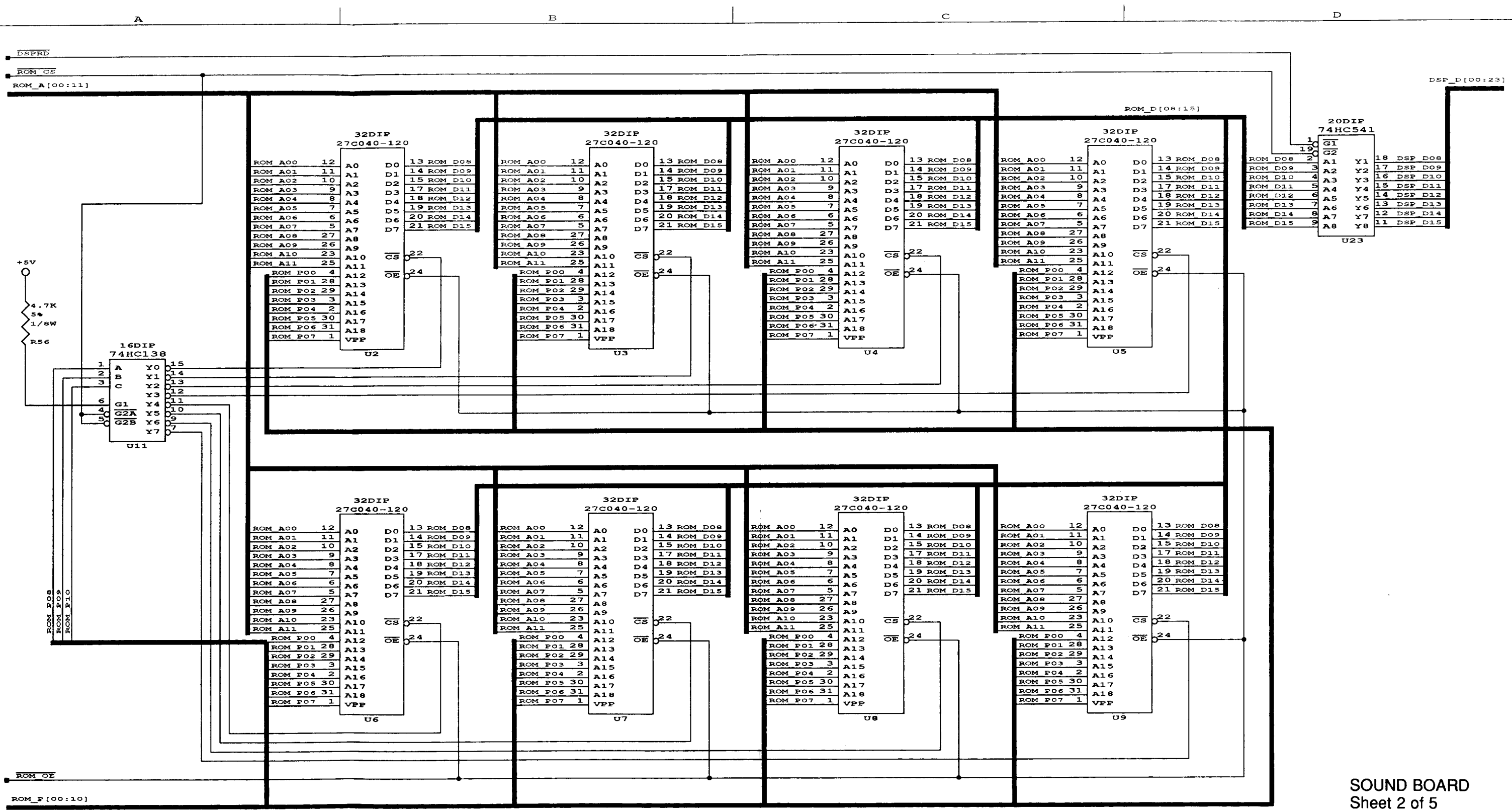


SOUND BOARD
Sheet 2 of 5

| ECN | CHANGE | DATE |
|---|---|---|

INFORMATION CONTAINED HEREIN IS CONFIDENTIAL PROPERTY AND MAY NOT BE USED OR DISCLOSED WITHOUT EXPRESS WRITTEN CONSENT FROM THE COMPANY.

| | | |
|---|---|---|
| PROJECT ENG. John Lowes | 1ST PROJ. NO. DATE | WILLIAMS ELECTRONICS GAMES<br>MIDWAY MANUFACTURING CO.<br>3401 N. CALIFORNIA AVENUE<br>CHICAGO ILLINOIS USA |
| DWN. BY JML 9-1-1993_17:39 DATE | 1ST USEAGE 40029 DATE | TITLE<br>DCS Video Sound Board |
| CHECKED DATE | CURRENT PROJ. DATE | |
| APPROVED DATE | SHEET 2 OF 5 | PART NO. 5766-13825-01 REV. |

Aux In
DAC STB
100 5% 1/8W R45
14DIP 74HC14 U38
100pF 50V 20% C11
+5V
16DIP AD1851 U16
-VA +VA
DGND TRIM
+VD MSBA
NC IOUT
CLK AGND
LTCH SJ
DATA RFB
-VD VOUT
-5A
+5A
0.1uF 50V 20% C55
DAC CLK
DACDAT
DACOUT
0.1uF 50V 20% C52
0.1uF 50V 20% C53
0.1uF 50V 20% C54
AGND
156C2 P6
WIRE JMPR J6
DACSIG
10uF 25V 20% C100
6.19K 1% 1/8W R44
47K 5% 1/8W R24
1000pF 50V 20% C35
3900pF 50V 5% C48
680pF 50V 20% C101
TL084 U37
6.19K 1% 1/8W R33
6.19K 1% 1/8W R34
6.19K 1% 1/8W R35
6.19K 1% 1/8W R36
6.19K 1% 1/8W R37
3900pF 50V 5% C49
1000pF 50V 20% C38
680pF 50V 20% C102
+12V
Jumper for kits
WIRE JMPR J5
V_AUD
2200UF 16V 20% C34
0.01uF 50V +80/-20% C39
SIP12 MB3731 U20
IN VCC
NC BS-M
BYPASS
OUT-M
FB
OUT-I
MUTE
BS-I
GND_IN
GND_OUT
100uF 25V 20% C31
+SPKR
-SPKR
FILM 0.1UF 100V 10% C58
FILM 0.1UF 100V 10% C59
FILM 0.1UF 100V 10% C60
To P1 Page 6
100K 5% 1/8W R3
10uF 25V 20% C106
220UF 16V 20% C33
10uF 25V 20% C1
47uF 25V 20% C2
39K 5% 1/8W R46
820 5% 1/8W R2
1000pF 50V 20% C36
680pF 50V 20% C104
6.19K 1% 1/8W R43
6.19K 1% 1/8W R42
6.19K 1% 1/8W R41
680pF 50V 5% C51
0.1uF 50V 20% C56
0.1uF 50V 20% C57
6.19K 1% 1/8W R40
6.19K 1% 1/8W R39
6.19K 1% 1/8W R38
3900pF 50V 5% C50
1000pF 50V 20% C37
680pF 50V 20% C103
1K 5% 1/8W R1
156C2 P7
Line Out
SOUND BOARD
Sheet 3 of 5
ECN
CHANGE
DATE
INFORMATION CONTAINED HEREIN IS CONFIDENTIAL PROPERTY AND MAY NOT BE USED OR DISCLOSED WITHOUT EXPRESS WRITTEN CONSENT FROM THE COMPANY.
PROJECT ENG. John Lowes
1ST PROJ. NO.
DWN. BY JML 9-1-1993_17:39
1ST USEAGE 40029
CHECKED
CURRENT PROJ.
APPROVED
SHEET OF
WILLIAMS ELECTRONICS GAMES
MIDWAY MANUFACTURING CO.
3401 N. CALIFORNIA AVENUE
CHICAGO ILLINOIS USA
TITLE DCS Video Sound Board Anti-Aliasing Filter
PART NO. 5766-13825-01
REV. -
3-35

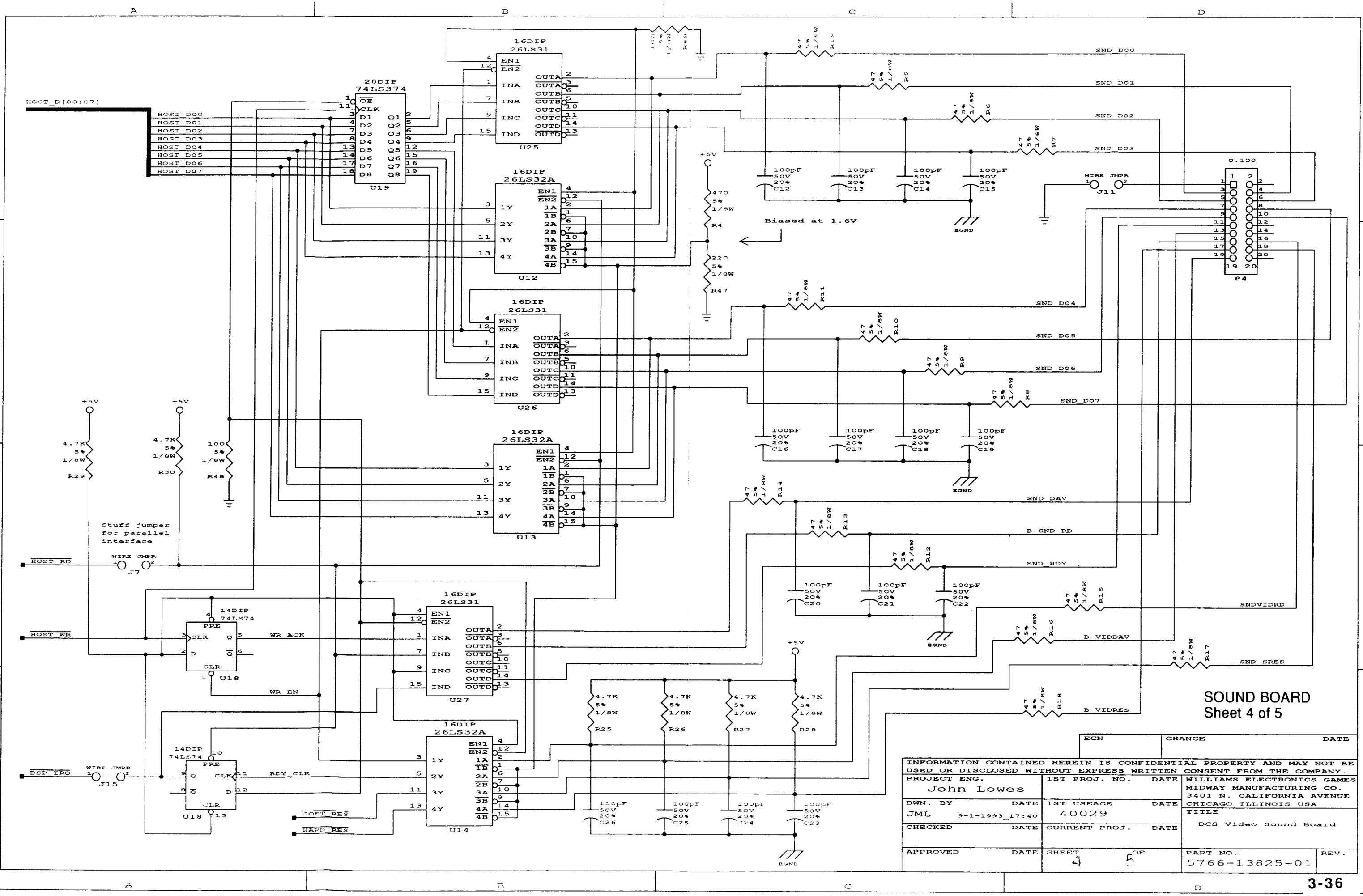


SOUND BOARD
Sheet 4 of 5

| ECN | CHANGE | DATE |
|---|---|---|

INFORMATION CONTAINED HEREIN IS CONFIDENTIAL PROPERTY AND MAY NOT BE USED OR DISCLOSED WITHOUT EXPRESS WRITTEN CONSENT FROM THE COMPANY.

| | | |
|---|---|---|
| PROJECT ENG. John Lowes | 1ST PROJ. NO. DATE | WILLIAMS ELECTRONICS GAMES MIDWAY MANUFACTURING CO. 3401 N. CALIFORNIA AVENUE CHICAGO ILLINOIS USA |
| DWN. BY JML DATE 9-1-1993_17:40 | 1ST USEAGE DATE 40029 | TITLE DCS Video Sound Board |
| CHECKED DATE | CURRENT PROJ. DATE | |
| APPROVED DATE | SHEET 4 OF 5 | PART NO. 5766-13825-01 REV. |

# Reset Circuit

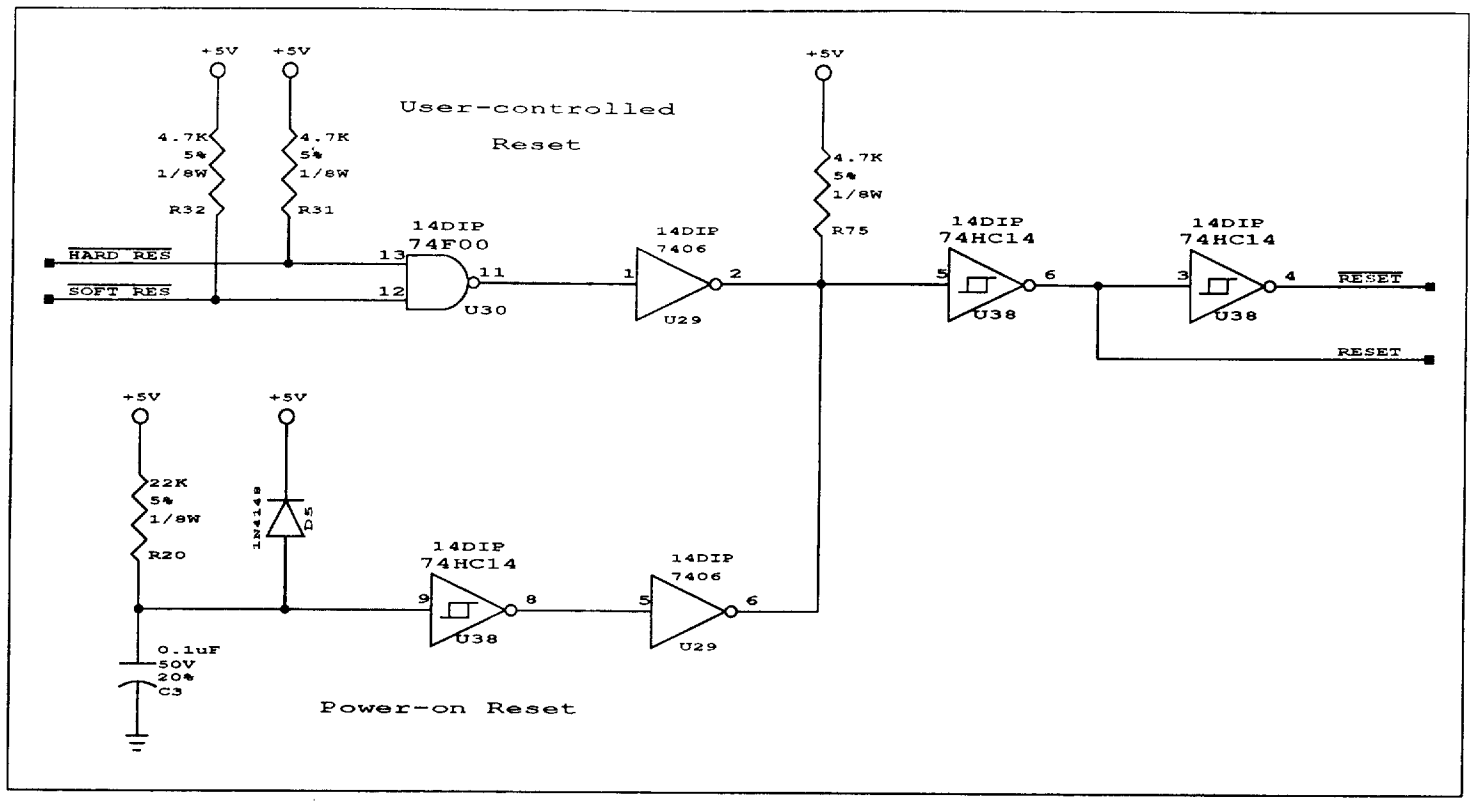


## GROUND ISOLATION

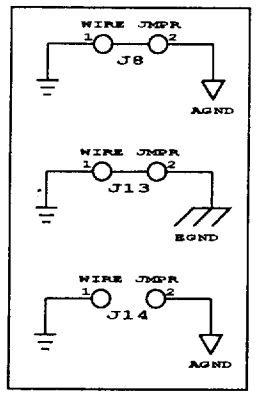


## Analog/Digital Power

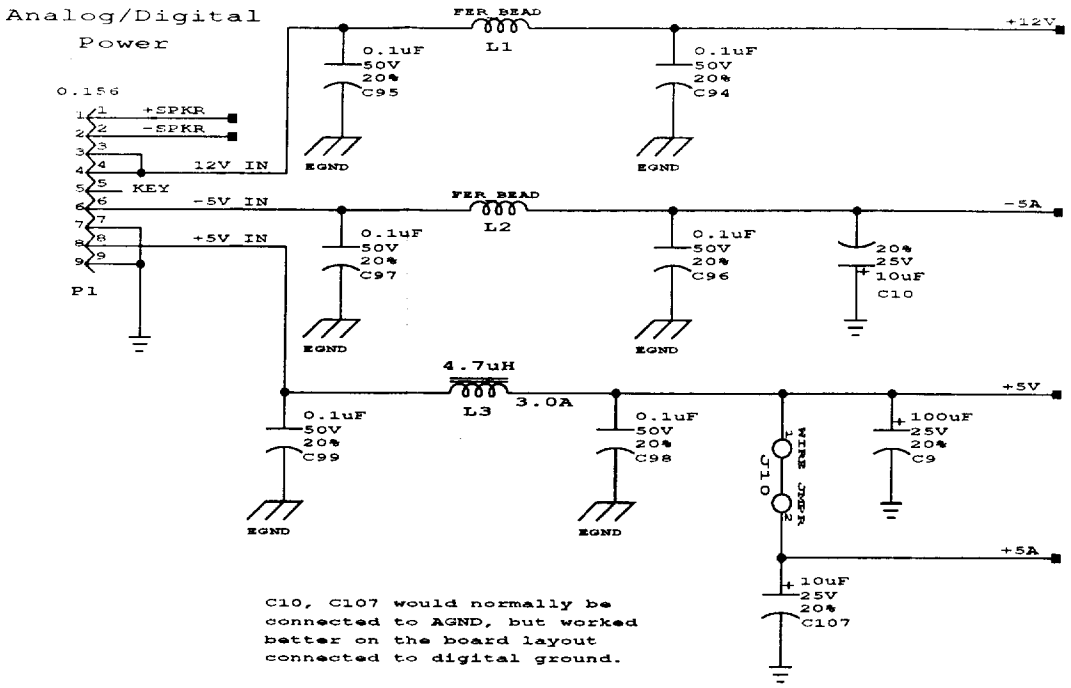


C10, C107 would normally be connected to AGND, but worked better on the board layout connected to digital ground.

## Spare Gates

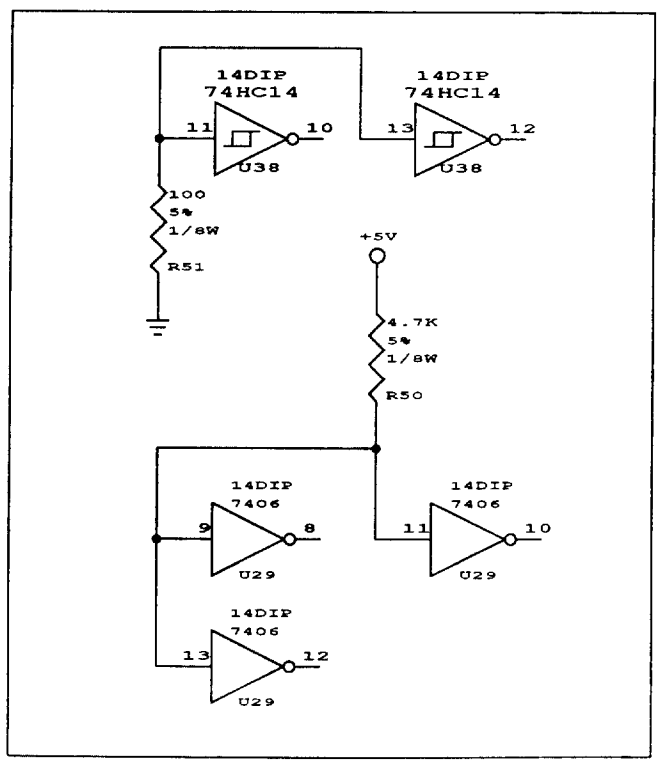


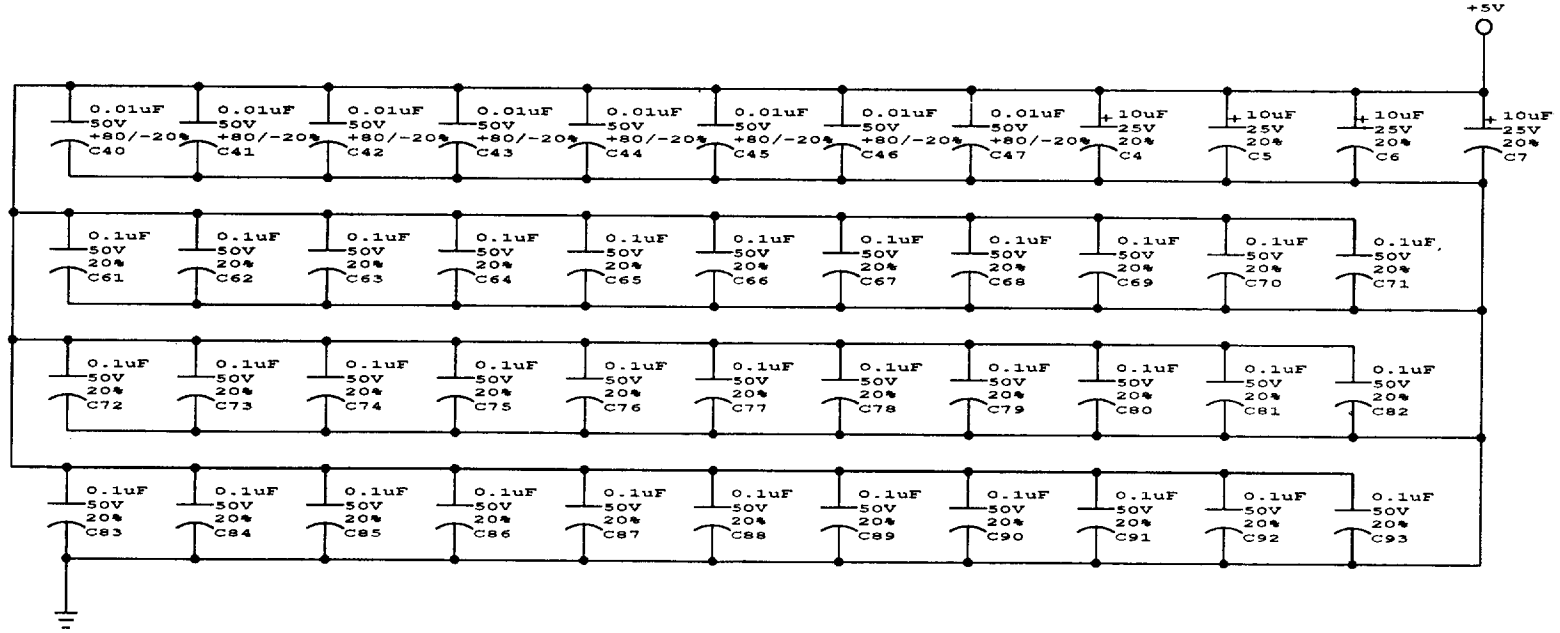


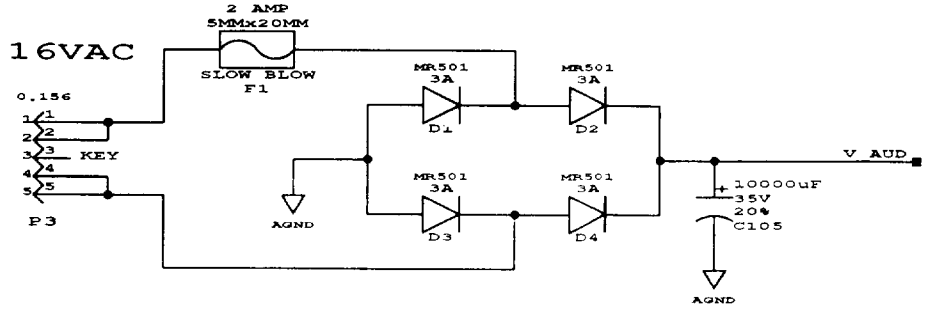


**SOUND BOARD**
**Sheet 5 of 5**

| ECN | CHANGE | DATE |
|---|---|---|

INFORMATION CONTAINED HEREIN IS CONFIDENTIAL PROPERTY AND MAY NOT BE USED OR DISCLOSED WITHOUT EXPRESS WRITTEN CONSENT FROM THE COMPANY.

| | | |
|---|---|---|
| PROJECT ENG. John Lowes | 1ST PROJ. NO. DATE | WILLIAMS ELECTRONICS GAMES<br>MIDWAY MANUFACTURING CO.<br>3401 N. CALIFORNIA AVENUE<br>CHICAGO ILLINOIS USA |
| DWN. BY DATE JML 9-1-1993_17:41 | 1ST USEAGE DATE 40029 | TITLE<br>DCS Video Sound Board |
| CHECKED DATE | CURRENT PROJ. DATE | |
| APPROVED DATE | SHEET 5 OF 5 | PART NO. 5766-13825-01 REV. |

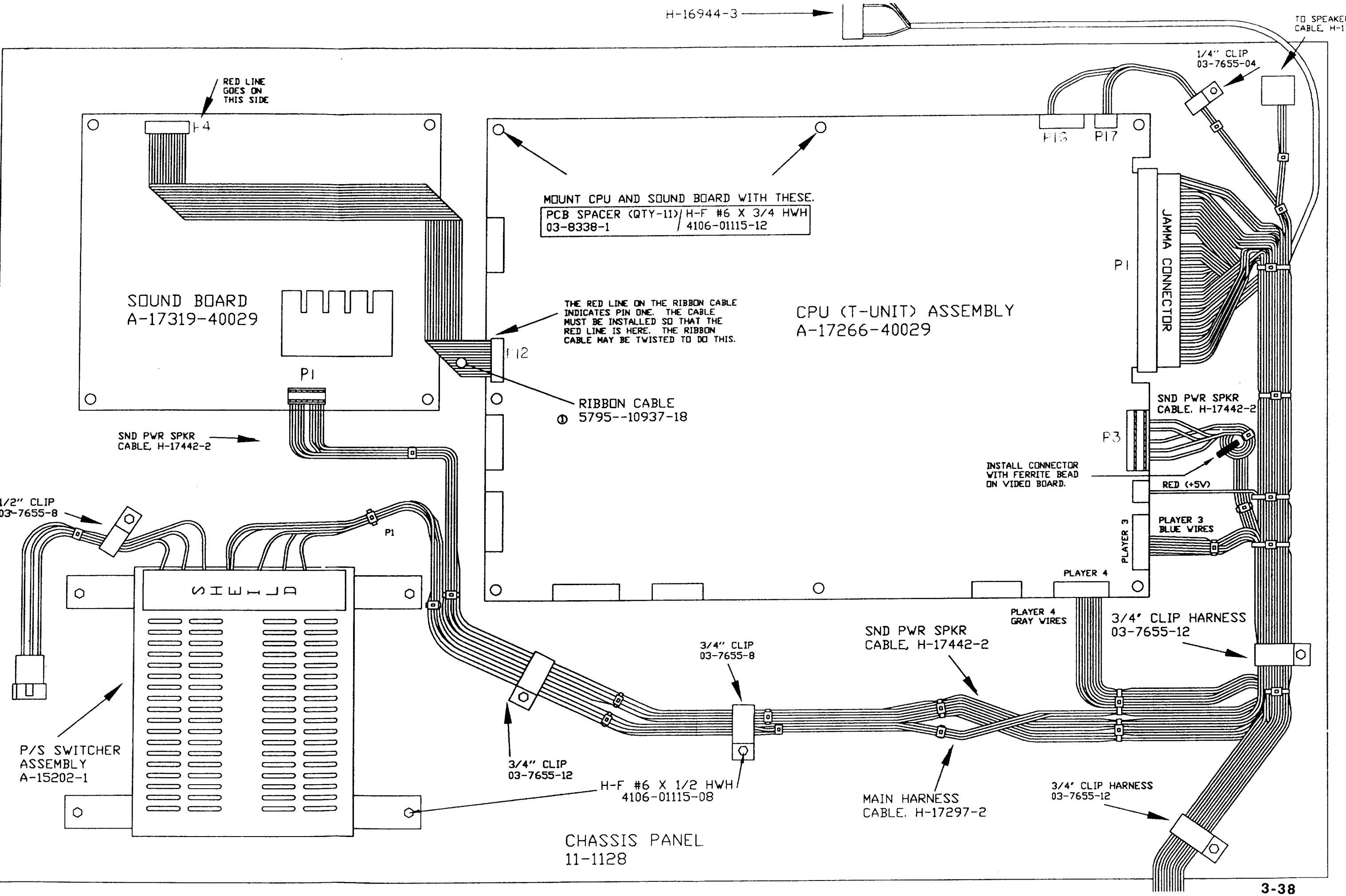
H-16944-3
TO SPEAKER CABLE, H-173
1/4" CLIP 03-7655-04
RED LINE GOES ON THIS SIDE
P4
P16
P17
MOUNT CPU AND SOUND BOARD WITH THESE.
PCB SPACER (QTY-11) 03-8338-1
H-F #6 X 3/4 HWH 4106-01115-12
SOUND BOARD A-17319-40029
P1
THE RED LINE ON THE RIBBON CABLE INDICATES PIN ONE. THE CABLE MUST BE INSTALLED SO THAT THE RED LINE IS HERE. THE RIBBON CABLE MAY BE TWISTED TO DO THIS.
P12
CPU (T-UNIT) ASSEMBLY A-17266-40029
P1
JAMMA CONNECTOR
RIBBON CABLE ① 5795--10937-18
SND PWR SPKR CABLE, H-17442-2
SND PWR SPKR CABLE, H-17442-2
P3
INSTALL CONNECTOR WITH FERRITE BEAD ON VIDEO BOARD.
RED (+5V)
PLAYER 3
PLAYER 3 BLUE WIRES
PLAYER 4
PLAYER 4 GRAY WIRES
3/4" CLIP HARNESS 03-7655-12
1/2" CLIP 03-7655-8
P1
SIEMA
P/S SWITCHER ASSEMBLY A-15202-1
3/4" CLIP 03-7655-8
SND PWR SPKR CABLE, H-17442-2
3/4" CLIP 03-7655-12
H-F #6 X 1/2 HWH 4106-01115-08
MAIN HARNESS CABLE, H-17297-2
3/4" CLIP HARNESS 03-7655-12
CHASSIS PANEL 11-1128

THIS SIDE UP

## Control Panel Wire Colors

**Player One**

| | |
|---|---|
| Start | White |
| Up (Jump) | White-Black |
| Down (Duck) | White-Brown |
| Left (Move) | White-Red |
| Right (Move) | White-Orange |
| High Punch | White-Yellow |
| Block | White-Green |
| High Kick | White-Blue |
| Low Punch | Blue-Black |
| Low Kick | Blue-Brown |
| Ground | Black |

**Player Two**

| | |
|---|---|
| Start | Violet-White |
| Up (Jump) | Violet-Black |
| Down (Duck) | Violet-Brown |
| Left (Move) | Violet-Red |
| Right (Move) | Violet-Orange |
| High Punch | Violet-Yellow |
| Block | Violet-Green |
| High Kick | Violet-Blue |
| Low Punch | Blue-Yellow |
| Low Kick | Blue-Green |
| Ground | Black |

## PC Board Jumpers

**CPU Board**

| | |
|---|---|
| J18, J19, J22, J24, J28, R154 | 0Ω Resistor, 1/4W |

**Sound Board**

| | |
|---|---|
| J5, J8, J10, J13 | Wire Insulated Jumper |
| J1, J4, J6, J7, J15 | 0Ω Resistor, 1/4W |

## WARNINGS & NOTICES

**Warning**
USE OF NON-MIDWAY PARTS OR CIRCUIT MODIFICATIONS MAY CAUSE SERIOUS INJURY OR EQUIPMENT DAMAGE! USE ONLY MIDWAY AUTHORIZED PARTS.
* For safety and reliability, substitute parts and modifications are not recommended.
* Substitute parts or modifications may void FCC type acceptance.
* This game is protected by federal copyright, trademark and patent laws. Unauthorized modifications may be illegal under Federal law. This also applies to MIDWAY logos, designs, publications and assemblies. Moreover, facsimiles of MIDWAY equipment (or any feature thereof) may be illegal under federal law, regardless of whether or not such facsimiles are manufactured with MIDWAY components.

**Warning**
**Note:** This equipment has been tested and found to comply with the limits for a Class A digital device, pursuant to Part 15 of the FCC Rules. These limits are designed to provide reasonable protection against harmful interference when the equipment is operated in a commercial environment. This equipment generated, uses and can radiate radio frequency energy and if not installed and used in accordance with the instruction manual, may cause harmful interference to radio communications. Operation of this equipment in a residential area is likely to cause harmful interference in which case the user will be required to correct the interference at his own expense.

**Warning**
Prevent shock hazard and assure proper game operation. Only plug this game into a properly grounded outlet. Do not use a cheater plug to defeat the power cord's grounding pin. Do not cut off the ground pin.

**Notice**
**When MIDWAY ships a game, it is in compliance with FCC regulations. Your sticker is proof. If the sticker is missing or damaged, legal repercussions to the owner or distributor of the game may result. If your game does not contain an FCC sticker, call MIDWAY immediately.**

**Notice**
No part of this publication may be reproduced by any mechanical, photographic, or electronic process, or in the form of a phonographic recording, nor may be transmitted, or otherwise copied for public or private use, without permission from the publisher.

Entire contents of this manual copyright © 1993 MIDWAY Manufacturing Company, INC. All Rights Reserved.

**FOR SERVICE:**
**CALL YOUR AUTHORIZED MIDWAY DISTRIBUTOR.**

**MIDWAY Manufacturing Company**
**3401 N. CALIFORNIA AVE.**
**CHICAGO, IL 60618**