
TAITO
OPERATION
THUNDERBOLT

RED BUTTON ON GUN LAUNCHES ROCKET.

MISSION OBJECTIVES: COLLECT THE FOLLOWING ITEMS BY SHOOTING THEM

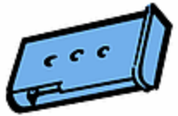

MAGAZINE
1 MAGAZINE ADDED



ROCKET
1 ROCKET ADDED

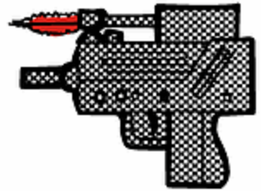

LASER SIGHT
RED DOT APPEARS TO INDICATE WHERE GUN IS AIMED



POWER DRINK
DAMAGE RECOVERED



BODY ARMOR
AMOUNT OF DAMAGE REDUCED TO HALF

PLAYER RECEIVES DAMAGES FOR SHOOTING HOSTAGES

GAME ENDS WHEN PLAYER RECEIVES FULL DAMAGE OR WHEN RESCUE MISSION IS COMPLETED

TAITO

OPERATION THUNDER BOLT™

OPERATING MANUAL



TAITO

TAITO AMERICA CORPORATION
660 S. Wheeling Road
Wheeling, IL 60090
Telephone (312) 520-9280
Fax (312) 520-1309

Part No. 140-908007

S P E C I F I C A T I O N S

POWER SUPPLY	120 VAC (60 Hz)
POWER CONSUMPTION	110 WATTS
TV MONITOR	26 INCH COLOR
DIMENSIONS	28.5"W x 40"D x 72"H

T A B L E O F C O N T E N T S

	Page Numbers
INSTALLATION	1
CABINET LAYOUT	2 - 5
GAME OPERATION & PLAY INSTRUCTIONS	6 - 7
SELF-TEST MODE	8 - 10
GUN SIGHT SETTINGS	9
DIP-SWITCH SETTINGS	11 - 12
SUB-ASSEMBLY ILLUSTRATIONS & PARTS IDENTIFICATION	13 - 22

*** WARNING ***

THIS GAME MUST BE PROPERLY GROUNDED. FAILURE TO DO SO MAY RESULT IN DESTRUCTION TO THE ELECTRONIC COMPONENTS.

I. GAME INSPECTION

Operation Thunderbolt has been thoroughly tested and readied for operation at the factory and should not require any special set-up procedure. However it is suggested that upon receiving your game you examine the following to further insure the game is in proper working condition:

CHECK:

[ ] Plug-in connectors are firmly seated.
[ ] All player control connections are complete.
[ ] No loose components on p.c. board.
[ ] Fuses are installed firmly in holders.
[ ] Coin mechanisms are operating properly.
[ ] No loose foriegn objects in cabinet (screws, components, etc.) which may cause shorting and result in damage to the game.

If problems do occur or technical assistance is required, please call our customer service department at 312/520-9280.

II. POWER REQUIREMENTS

The game is shipped ready for operation at 120VAC, 60Hz with a power consumption of approximately 250 watts.

C A U T I O N

FOR SAFE OPERATION IT IS STRONGLY RECOMMENDED THE CABINET BE PROPERLY GROUNDED. THIS GAME IS EQUIPPED WITH A THREE CONDUCTOR POWER CABLE. THE THIRD PRONG (round in shape) WILL AUTOMATICALLY GROUND THE GAME WHEN PLUGGED INTO A PROPERLY GROUNDED THREE PRONG RECEPTICAL. IF IT BECOMES NECESSARY TO USE AN ADAPTOR, THE GROUNDING LUG OR WIRE ON THE ADAPTOR MUST BE PROPERLY GROUNDED TO ASSURE SAFE OPERATION.

III. GAME INSTALLATION

The following precautions should be followed when installing the game:

* Handle the game with care so as not to damage the fragile picture tube.

* Do NOT install the game in direct sunlight or near a heat source. Doing so might cause the internal temperature of the game to exceed it's maximum operating temperature and could result in damage to the game's components.

* Do not install the game in excessively dusty or damp environments.

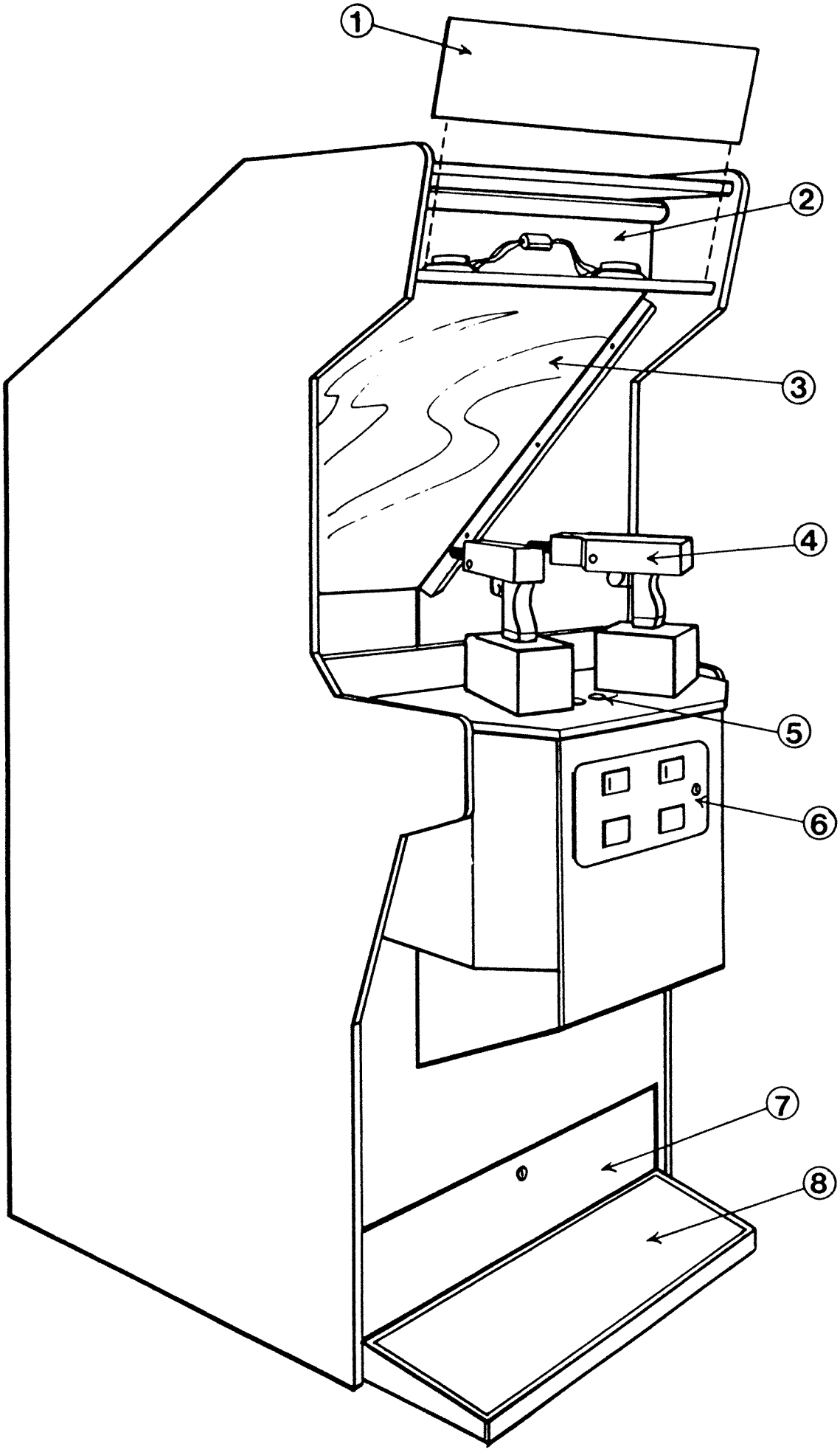
1
2
3
4
5
6
7
8

C A B I N E T (F R O N T)

KEY NO.	PART NO.	REF NO.	DESCRIPTION
1	140-908001		MARQUEE GLASS WITH ARTWORK
	140-901021	NOT SHOWN	MARQUEE UPPER BRACKET
	140-901022	NOT SHOWN	MARQUEE LOWER BRACKET
2	140-904000		LIGHT ASSEMBLY (COMPLETE)
	140-904001		FLOURESCENT BULB
	140-904006	NOT SHOWN	STARTER
	140-904007	NOT SHOWN	BALLAST
	140-904008	NOT SHOWN	FLOURESCENT SOCKET
	140-904002		4" SPEAKER
3	140-908009		MIRROR
	140-908010	NOT SHOWN	MONITOR FRONT GLASS
	140-901020	NOT SHOWN	MONITOR GLASS LOWER BRACKET
ASSY	140-901007		CONTROL PANEL (COMPLETE)
4	140-909000		GUN ASSEMBLY
5	140-901012		START BUTTON (RED)
	140-901013		START BUTTON (BLUE)
	140-901008		WOODEN GUN DECK
	140-901023	NOT SHOWN	CONTROL PANEL FRONT LIP BRACKET
	140-901024	NOT SHOWN	BASSET CLAMP
	140-901025	NOT SHOWN	BASSET STRIKE
6	140-903000		COIN DOOR ASSEMBLY (COMPLETE)
7	140-902000		ELECTRONIC DRAWER ASSEMBLY
8	140-901027		FOOT STEP RUBBER PAD
	140-901026	NOT SHOWN	FOOT STEP EDGE BRACKET

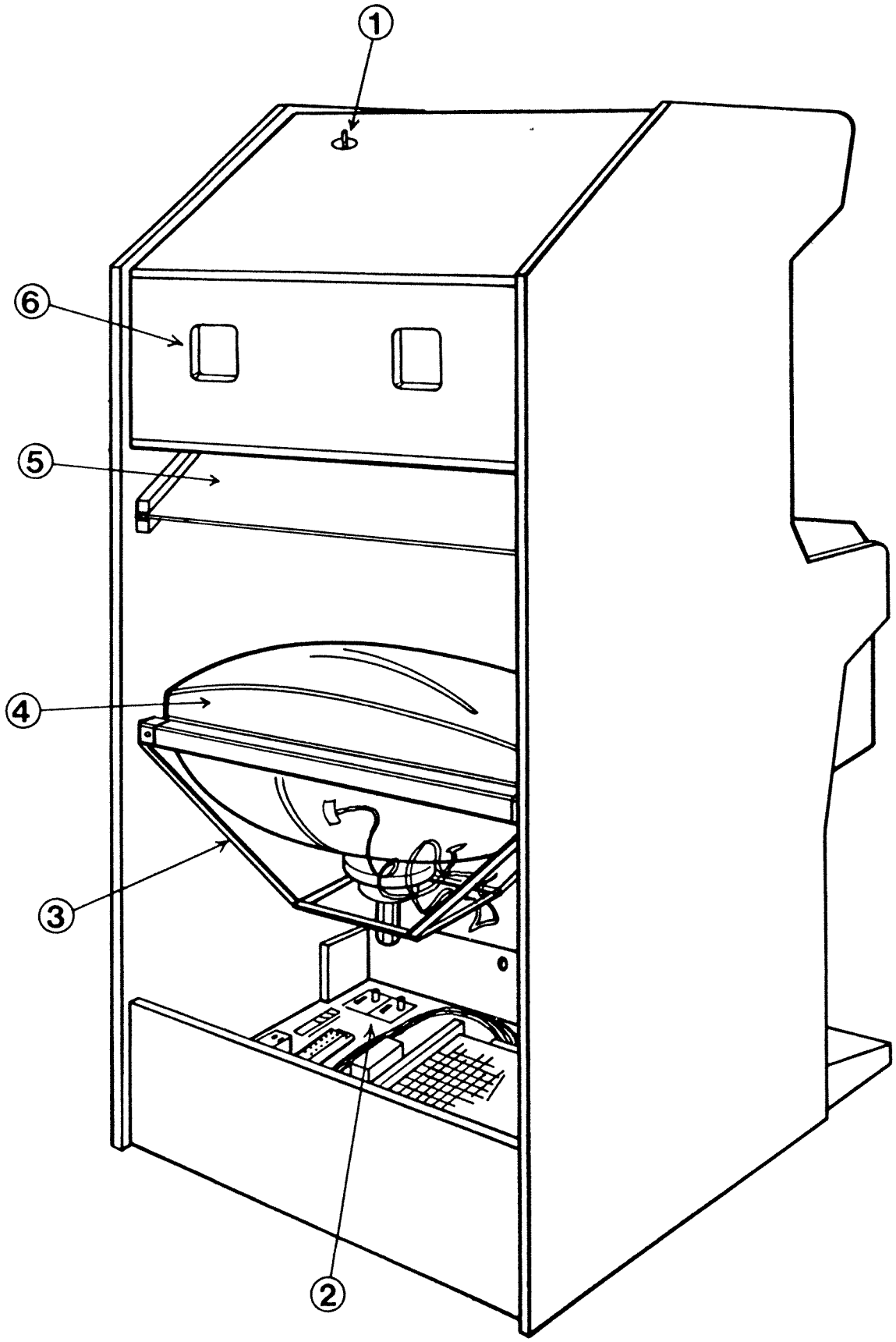
1
6
5
4
3
2

C A B I N E T (R E A R)

KEY NO.	PART NO.	REF NO.	DESCRIPTION
1	140-906003		ON/OFF SWITCH
	140-906004	NOT SHOWN	ON/OFF SWITCH BRACKET
2	140-902000		ELECTRONIC DRAWER ASSEMBLY
3	140-901032		COLOR MONITOR (26 INCH)
4	140-901004		MONITOR BEZEL (FLAT BLACK)
5	140-908009		MIRROR
6	140-901000		CABINET
	140-901028	NOT SHOWN	LOWER REAR CORNER PROTECTOR (LEFT)
	140-901029	NOT SHOWN	LOWER REAR CORNER PROTECTOR (RIGHT)
	140-901030	NOT SHOWN	TRUCKING PROTECTOR
	140-901005	NOT SHOWN	CASTERS
	140-901006	NOT SHOWN	LEG LEVELERS

IV. GAME DESCRIPTION

O P E R A T I O N T H U N D E R B O L T

TRANS GLOBAL FLIGHT #520 HAS BEEN HIJACKED BY A HEAVILY ARMED AND DANGEROUS GROUP OF REBELS. IT WAS LAST REPORTED THAT A GROUP OF PASSENGERS WERE REMOVED FROM THE PLANE AND TAKEN INTO CUSTODY AT ENEMY HEADQUARTERS. THEY WILL KILL THE HOSTAGES ONE BY ONE IN 24 HOURS UNLESS THEIR DEMANDS ARE MET. IT IS NOW UP TO YOU TO PENETRATE ENEMY TERRITORY, LOCATE THE HOSTAGES AND RETURN THEM TO SAFETY USING THE DOWNED TRANS GLOBAL AIRCRAFT.

MISSION OBJECTIVES:

* THE GAME BEGINS...YOUR MISSION IS TO RESCUE HOSTAGES BEING HELD CAPTIVE BY A RADICAL AND HEAVILY ARMED GROUP OF REBELS.

* CONDUCT RAID ON ENEMY TERRITORY AND COLLECT ADDITIONAL AMMUNITION. SHOOT AIR-DROPPED CRATES TO COLLECT RESERVE SUPPLIES.

* IF YOUR RAID IS SUCCESSFUL, YOU WILL MAKE CONTACT WITH AN INTELLEGENCE AGENT AND OBTAIN IMPORTANT INFORMATION.

* BY JEEP, MAKE YOUR WAY TO THE ENEMY HIDE-OUT. THERE YOU WILL FIND HOSTAGES BEHIND LOCKED DOORS. SHOOT THE LOCKS OFF THE DOORS TO FREE HOSTAGES. DO NOT SHOOT THE HOSTAGES!

* HEAD FOR ENEMY HEADQUARTERS. THERE, BEHIND LOCKED DOORS, YOU WILL FIND MORE HOSTAGES.

* AFTER RESCUING THE HOSTAGES FROM ENEMY HEADQUARTERS, SECURE YOUR ESCAPE ROUTE TO THE AIRPORT.

* ONCE YOU'VE ARRIVED AT THE AIRPORT, YOU WILL BOARD A PASSENGER PLANE. INSIDE THE PLANE YOU WILL FIND A SMALL GROUP OF HOSTAGES, MOSTLY WOMEN AND CHILDREN. APPROACH WITH CAUTION....THE PLANE AND PASSENGERS ARE HEAVILY GUARDED.

* WHEN YOU HAVE SUCCESSFULLY SECURED THE PLANE, HEAD TOWARD THE COCKPIT, WHERE THE PILOT IS BEING HELD AT GUNPOINT. APPROACH CAUTIOUSLY! SHOOTING AND KILLING THE PILOT WILL DESTROY ANY POSSIBILITY OF ESCAPE AND YOUR MISSION WILL FAIL.

ITEMS TO BE PICKED UP

The player may pick up items by shooting at them. In a two player game, each player is given the same chance to obtain the items. The player who shoots them is awarded them.



LASER SIGHT.....A laser sight is mounted on the machine gun and the sight position is shown with a red circle on the screen.



BODY ARMOR.....The player can put on a bullet-proof vest with which his damage is reduced by half.

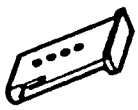

MAGAZINE.....The number of machine gun magazines is increased by 1.



ROCKET BOMB.....The number of rocket bombs is increased by 1.



AMMUNITION CASE.....The number of magazines increases by 3 and the number of rocket bombs increases by 2.



POWER DRINK.....The number of LIFE's is increased by a given number.

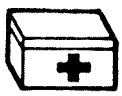

FIRST AID KIT.....All of LIFE's recover.



ITEM BOX.....This box contains any of the above items.

V. SELF-TEST MODE

A. To enter the Self-Test Mode

1. Turn power OFF.
2. Locate Dip Switch Bank A on the logic pcb and slide switch #3 to the ON position.
3. Turn power ON.

The phrase "INTO TEST MODE" will appear on the screen.

* ROM/RAM & COLOR MONITOR TEST

* GUN ADJUSTMENTS -	Press the HARDY (right side) button 1 times.
* GUN SIGHT SETTINGS -	Press the HARDY (right side) button 2 times.
* TEST SWITCH MODE -	Press the HARDY (right side) button 1 time, then press the ROY (left side) button once.

B. ROM/RAM & COLOR MONITOR TEST

1. During the first stage of this test the game conducts a self-test of its rom and ram memory and indicates if there is a problem.
2. During the second stage of this test, the screen displays a color bar and crosshatch pattern to assist in adjusting the color monitor.

C. GUN ADJUSTMENTS

1. The data displayed during this test is intended for use by qualified technicians ONLY.

D. GUN SIGHT SETTINGS

* IMPORTANT - If you are NOT setting the gun sights, press the ROY (left side) button to bypass this test.

1. First, you adjust the gun sight for ROY (left side), then you adjust the gun sight for HARDY (right side).

2. To set the sight, adjust the gun sight to a * mark displayed on the screen, then pull the trigger. Always use the sight on the gun. DO NOT use the red circles. (See illustration below.)

3. When setting the sight for either side, ROY or HARDY, always follow this order - UPPER LEFT - CENTER IN - LOWER RIGHT.

4. After finishing the sight adjustments and once the gun sight data is newly recorded, the display will read "EE ROM READ OK". This simply means all the gun sight settings have been completed. Press the HARDY (right side) button twice to exit the sight adjustment mode and enter the SWITCH TEST mode.

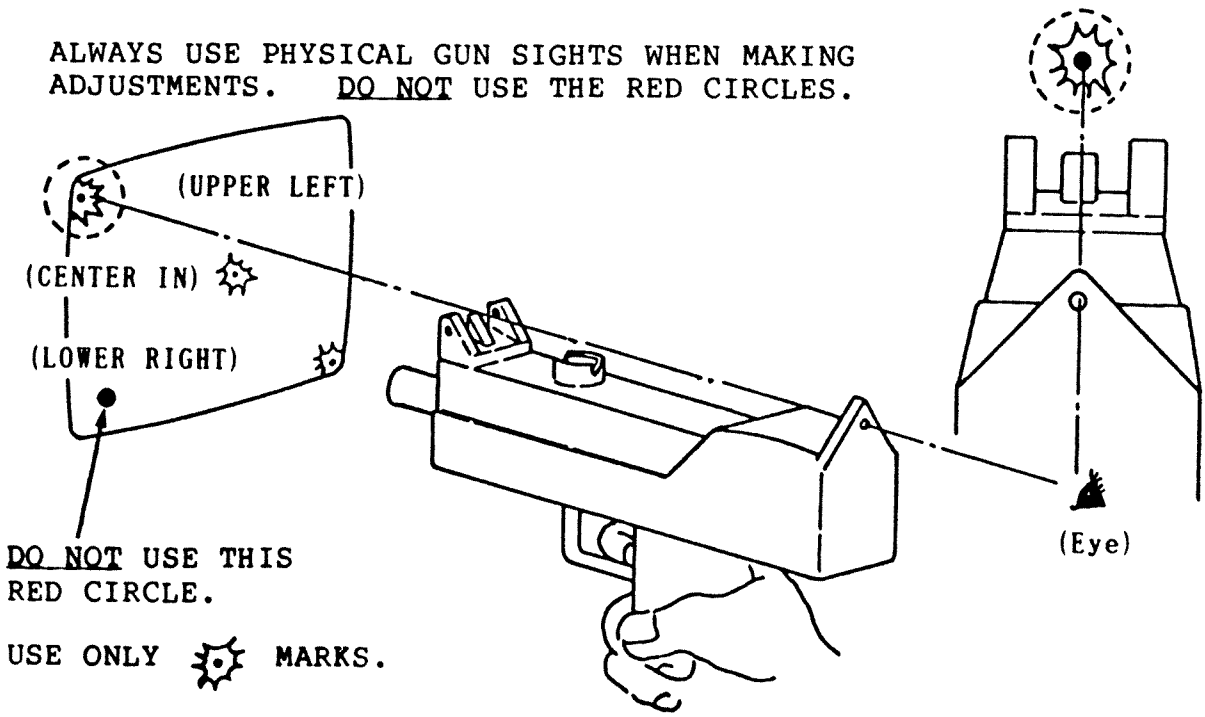

E. TEST SWITCH MODE

1. Press each game control switch to test. When pressed, the display will change from OFF to ON. This indicates the switch is operating properly. (See ilustration below.)

2. When finished testing all game switches, locate Dip Switch Bank A and return switch #3 to the OFF position. Switch the power to the game off and on to return to normal game (ready to play) mode.

```
                TEST SW MODE

COIN A=OFF                    COIN B=OFF
SERVICE:OFF
SELECT 1P=OFF                 SELECT 2P=OFF
TRIGER 1P=OFF                 TRIGER 2P=OFF
BOMB 1P=OFF                   BOMB 2P=OFF

        SOUND CODE=**     SOUND  OK

                8 7 6 5 4 3 2 1
 DIP SW A       H H H H H L H H   L ON
 DIP SW B       H H H H H H H H   H OFF

                  RAM OK
                  ROM OK
```

VI. ADJUSTMENTS OF GAME PC BOARD

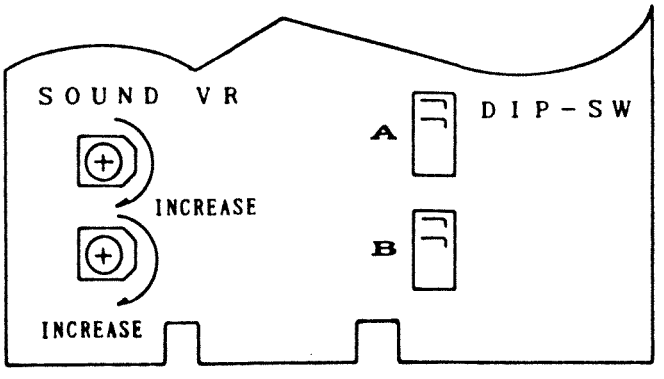

DIP SWITCH SETTINGS

The following option switch settings were designed to allow the customizing of OPERATION THUNDERBOLT's various game features to suit different environments. When used wisely, the flexibility they offer can maximize game performance and increase potential earnings.

DIP SWITCH A

FUNCTION	SETTING	1	2	3	4	5	6	7	8
NONE	MUST REMAIN IN "OFF" POSITION	OFF							
CONTINUE PLAY	*ENABLED DISABLED		OFF ON						
SELF-TEST MODE	*GAME MODE TEST MODE			OFF ON					
ATTRACT SOUNDS	*ENABLED DISABLED				OFF ON				
PLAY PRICING COIN A	1 CO = 1 PL 1 CO = 2 PL *2 CO = 1 PL 2 CO = 3 PL					OFF ON OFF ON	OFF OFF ON ON		
PLAY PRICING COIN B	1 CO = 1 PL 1 CO = 2 PL *2 CO = 1 PL 2 CO = 3 PL							OFF ON OFF ON	OFF OFF ON ON

* = FACTORY RECOMMENDED SETTINGS

DIP SWITCH B

FUNCTION	SETTING	1	2	3	4	5	6	7	8
DIFFICULTY LEVEL	*MEDIUM	OFF	OFF						
	EASY	ON	OFF						
	HARD	OFF	ON						
	HARDEST	ON	ON						
INITIAL NO. OF MAGAZINES/ ROCKETS	*5 / 3			OFF	OFF				
	6 / 4			ON	OFF				
	7 / 5			OFF	ON				
	8 / 6			ON	ON				
NUMBER OF BULLETS IN A MAGAZINE	*40					OFF	OFF		
	50					ON	OFF		
	35					OFF	ON		
	30					ON	ON		
DISCOUNTED CONTIN. PLAY	DISABLED							OFF	
	*ENABLED							ON	
NONE	MUST REMAIN IN "ON" POSITION								ON

* = FACTORY RECOMMENDED SETTINGS

IMPORTANT

WHEN THE "DISCOUNTED CONTINUE PLAY" OPTION IS ENABLED, THE PLAYER PAYS THE FULL AMOUNT FOR THE FIRST GAME AND THEN IS ALLOWED TO CONTINUE BY INSERTING ONLY 1 COIN. FOR EXAMPLE, IF THE GAME IS PRICED AT 2 COINS PER 1 PLAY AND THE "DISCOUNTED CONTINUE PLAY" OPTION IS ENABLED, THE PLAYER MUST INSERT 2 COINS FOR HIS FIRST GAME AND THEN ONLY 1 COIN TO CONTINUE HIS GAME.

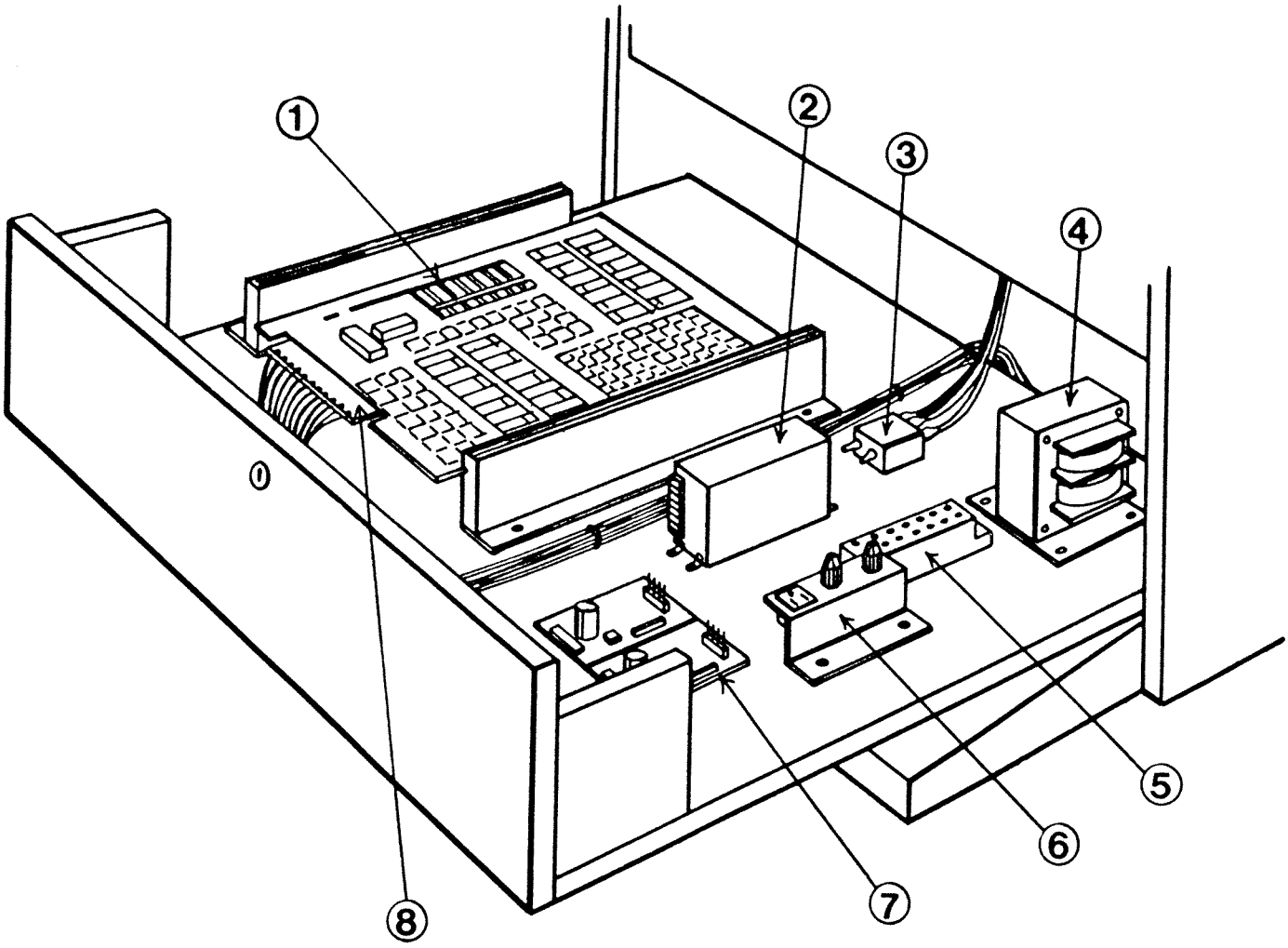

E L E C T R O N I C D R A W E R A S S E M B L Y

KEY NO.	PART NO.	REF NO.	DESCRIPTION
ASSY	140-902000		ELECTRONIC DRAWER ASSEMBLY
1	140-998000		MAIN LOGIC PCB
2	140-902008		POWER SUPPLY
3	140-902010		10 AMP LINE FILTER
4	140-902006		TRANSFORMER
5	140-902001		TERMINAL BLOCK
6	140-902004		FUSE BRACKET
	140-902003		FUSE
	140-902009		SERVICE OUTLET
7	140-902002		AUXILARY POWER SUPPLY
8	140-902007		R.F. FILTER BOARD & JAMMA HARNESS

FIGURE A

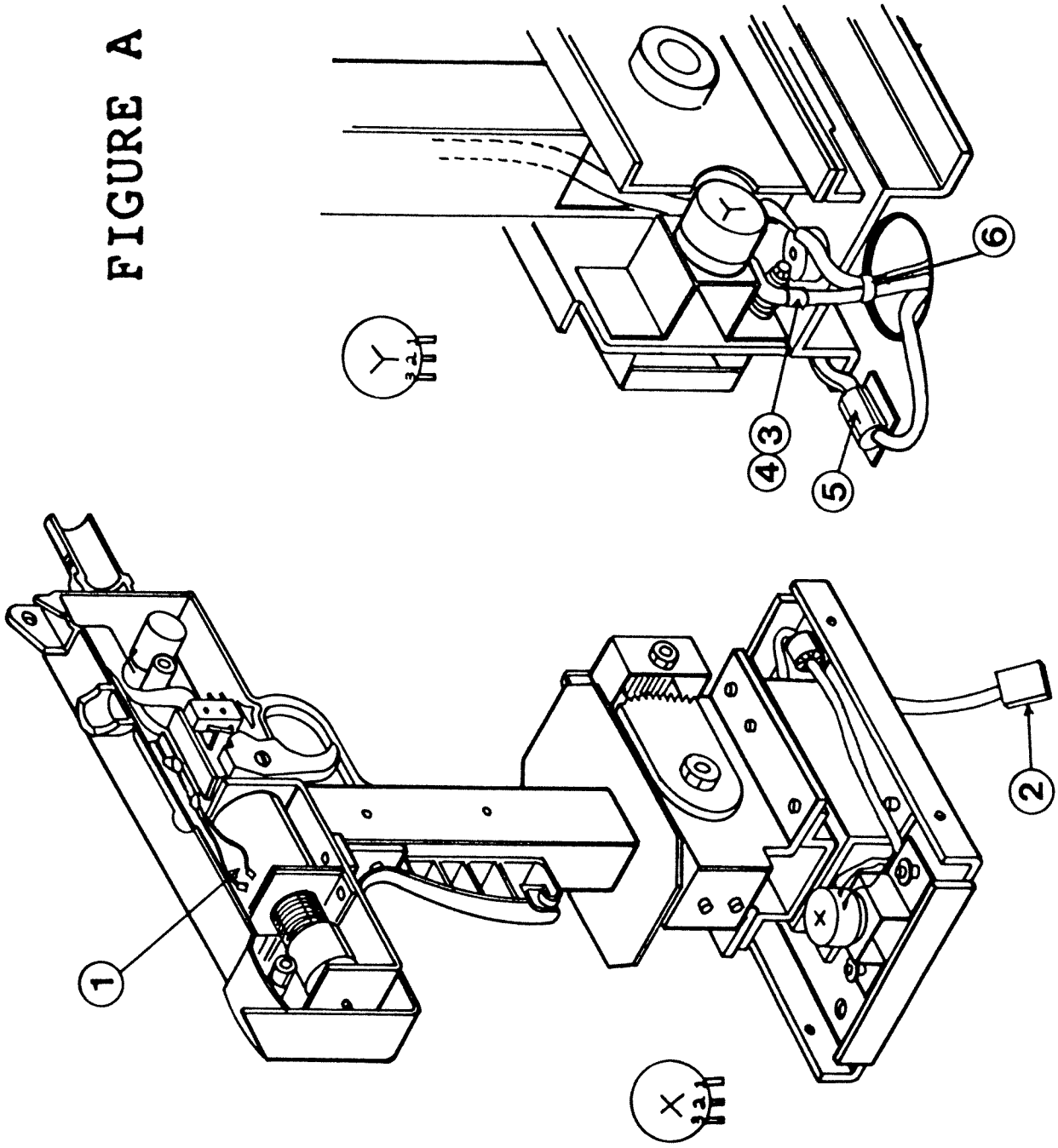

FIGURE A

OPERATION THUNDERBOLT GUN ASSY
PARTS LIST

KEY	DESCRIPTION	REF NO	PART NO
1	DIODE 03C	A0200029	140-913037
2	K HARNESS	L3000365	140-913038
3	NYLON CRAPM MP-SN		140-913215
4	FLANGE NUT M4		140-913216
5	DK CRAMP DK-0SF		140-913217
6	CONVEX CV-100	F9000121	140-913039

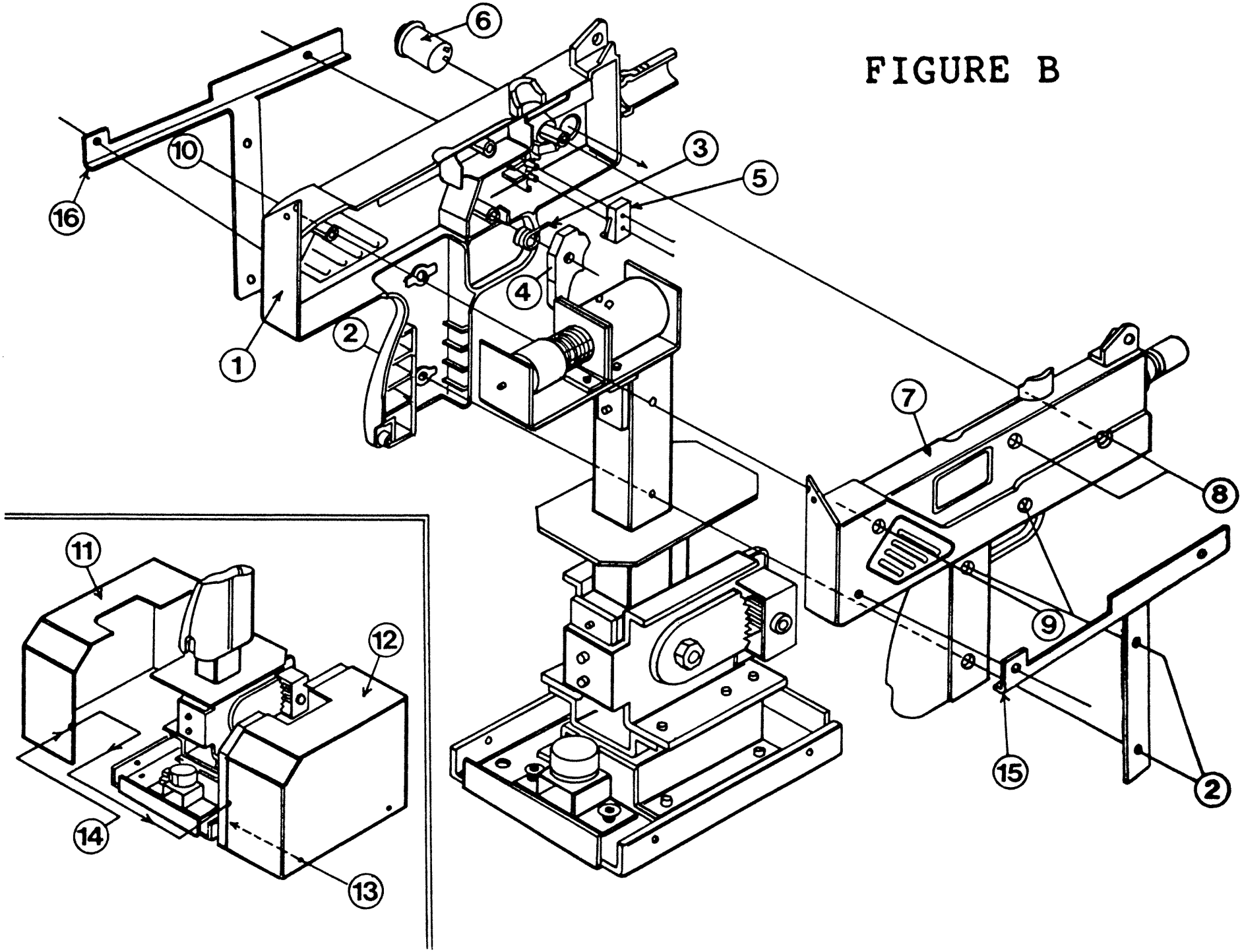

FIGURE B

FIGURE B

OPERATION THUNDERBOLT GUN ASSY
PARTS LIST

KEY	DESCRIPTION	REF NO	PART NO
1	GUN COVER (A)	F9001793	140-913040
2	C-SINK HD TORX SCREW M4 X8		140-913218
3	TRIGGER SPRING	E4000274	140-913041
4	TRIGGER	F9001795	140-913042
5	MICRO-SWITCH SS-5GL2	CO200183	140-913043
6	PUSH BUTTON SWITCH	C0200279	140-913044
7	GUN COVER (Bl)	F9001794	140-913045
8	SOCKET CAP TORX BOLT M4X35		140-913219
9	SOCKET CAP TORX BOLT M4X40		140-913220
10	HEX CAP NUT M4-3 (BLACK)		140-913221
11	SIDE COVER (R)	E3006166	140-913046
12	SIDE COVER (L)	E3006167	140-913047
13	BUTTON MD TORX SCREW M4X8		140-913222
14	BUTTON ND TORK SCREW M3X6		140-913223
15	R. SIDE METAL SUPPORT BRACKET		140-913226
16	L. SIDE METAL SUPPORT BRACKET		140-913227

FIGURE C

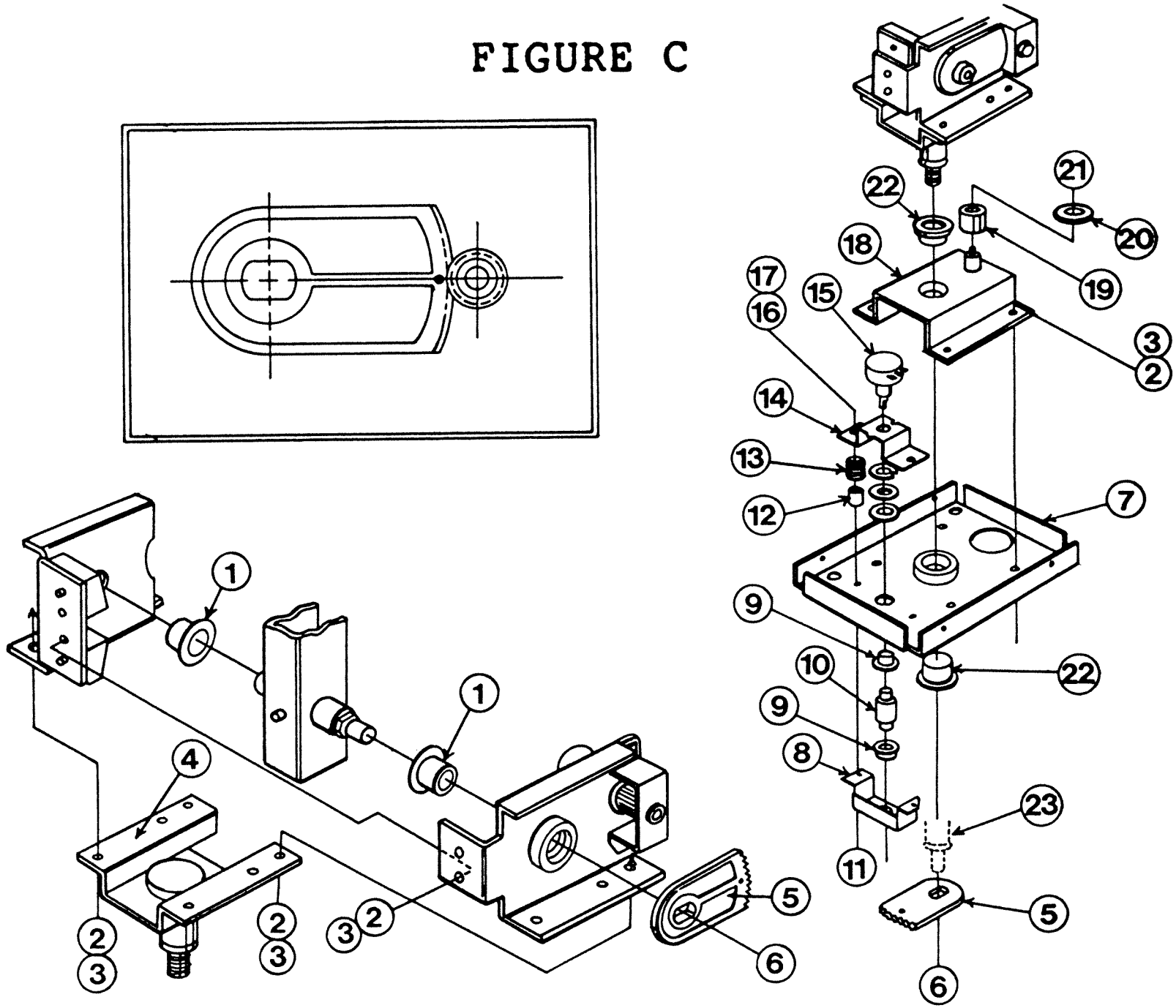

FIGURE C

OPERATION THUNDERBOLT GUN ASSY
PARTS LIST

KEY	DESCRIPTION	REF NO	PART NO
1	OIL-LESS FLANGE BUSHING 80F-0905	F9001797	140-913001
2	SPRING WASHER		140-913002
3	SOCKET CAP		140-913003
4	SHAFT BRACKET	E9000318	140-913004
5	GEAR - A	E7000132	140-913005
6	SELF-LOCKING NUT N M10		140-913225
7	UNDERBASE	E9000320	140-913006
8	GEAR BRACKET	E3006164	140-913007
9	OIL-LESS FLANGE BUSHING 80F-0905	F9001798	140-913008
10	GEAR - B	E7000133	140-913009
11	PAN MD SEMUTH (S) M4X20		140-913010
12	SPACER - 5L	E1000881	140-913048
13	TENSION SPRING	E4000275	140-913011
14	VOLUME BRACKET	E3006165	140-913012
15	VARIABLE RESISTOR, PSET KNOB BSM	A2102515	140-913013
16	PLAIN WASHER	4M	140-913202
17	SELF LOCKING NUT - U M4		140-913203
18	UP BASE	E9000319	140-913014
19	STOPPER RUBBER (B)	F9001791	140-913015
20	WASHER	E3006163	140-913016
21	PAN HD SEMUTH(S) M4X20		140-913204
22	OIL-LESS FLANGE BUSHING 80F-1810	F9001799	140-913017
23	C RING FOR SHAFT STW-18		140-913205

FIGURE D

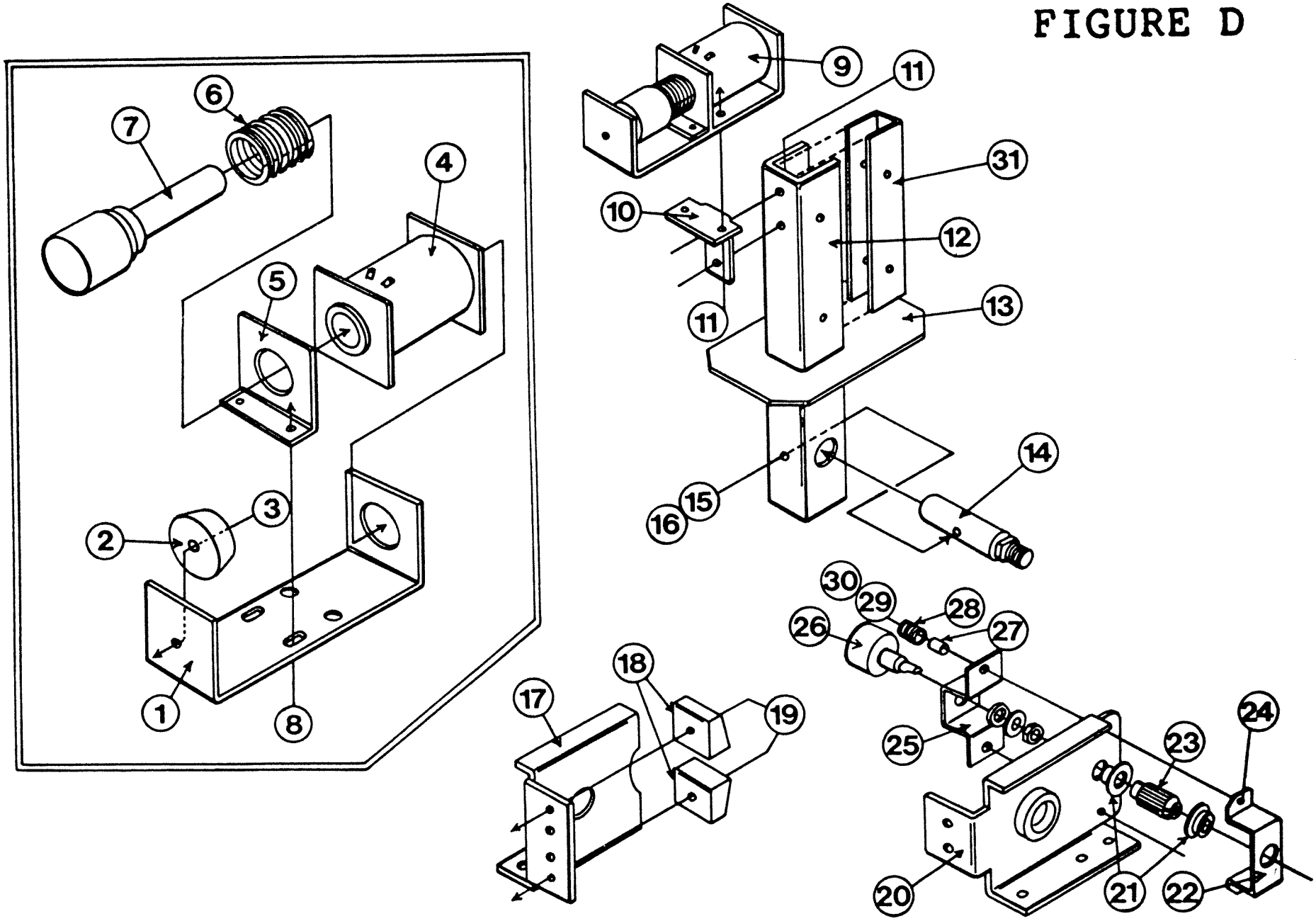
1
2
3
4
5
6
7
8
9
10
11
11
12
13
14
15
16
17
18
19
20
21
22
23
24
25
26
27
28
29
30
31

FIGURE D

OPERATION THUNDERBOLT GUN ASSY
PARTS LIST

KEY	DESCRIPTION	REF NO	PART NO
1	SOLENOID BRACKET	E3006168	140-913018
2	RUBBER LEG K-24	F3000024	140-913019
3	PAN HD SEMUTH M4X10		140-913206
4	SOLENOID	C1101225	140-913224
5	L-BRACKET	E3006169	140-913020
6	BUTTON SPRING	E4000005	140-913021
7	PLUNGER	E1000882	140-913022
8	PAN HD SEMUTH M4X8		140-913207
9	SOLENOID ASSY	M9001569	140-913023
10	SUPPORT BRACKET	E3006161	140-913024
11	PAN HD SEMUTH M5X10		140-913208
12	ARM	E3006162	140-913025
13	GUN MASK	F9001789	140-913026
14	SUB SHAFT	E1000880	140-913027
15	SPRING WASHER 5M		140-913210
16	SOCKET CAP BOLT	M5X5	140-913211
17	SIDE BRACKET (L)	E9000316	140-913028
18	STOPPER RUBBER A	F9001790	140-913029
19	WASHER TAP TIGHT M4X12		140-913030
20	SIDE BRACKET R	E9000317	140-913031
21	OIL-LESS FLANGE BUSHING 80F-0905	F9001798	140-913032
22	GEAR BRACKET	E3006164	140-913033
23	GEAR (B)	E7000133	140-913009
24	PAN HD SEMUTH (S) M4X20		140-913212

FIGURE D

OPERATION THUNDERBOLT GUN ASSY
PARTS LIST

KEY	DESCRIPTION	REF NO	PART NO
26	VARIABLE RESISTOR PSET KNOB	A2102515	140-913013
27	SPACER - 5L	E1000881	140-913036
28	TENSION SPRING	E4000275	140-913035
29	PLAIN WASHER	4M	140-913202
30	SELF LOCKING NVT-V M4		140-913214
31	ARM SUPPORT		140-913228

NOTES

NOTES

NOTES