
centuri
INC.
HIALEAH, FLORIDA, U.S.A.
Phoenix

centuri™ inc.
HIALEAH, FLORIDA U.S.A.

PHOENIX

PLAY INSTRUCTIONS

- INSERT COIN(S).
- SELECT GAME FOR ONE OR TWO PLAYERS.
- USE JOYSTICK TO MOVE YOUR SPACE SHIP TO THE LEFT OR TO THE RIGHT. AND FIRE BEAM GUN TO SHOOT PHOENIX ARMY.
- WHEN SCORE REACHES 3,000 & 30,000 POINTS ONE SPACE SHIP IS ADDED EACH TIME FOR THESE POINTS.
- A STRATEGY IS NEEDED TO AVOID PHOENIX ARMY'S ATTACK BY PUSHING BARRIER BUTTON.
- GAME IS OVER WHEN ALL SPACE SHIPS HAVE BEEN DESTROYED.

200PTS. WHEN FLYING

20PTS. WHEN WAITING
40PTS. WHEN ATTACKING
(POINTS ARE DOUBLED IN CONTINUOUS HITTINGS.)

50PTS. WHEN STILL AN EGG
100PTS WHEN FOLDING THE WINGS
100-800PTS. WHEN SPREADING THE WINGS
(HIGHER POINTS CAN BE SCORED WHEN HITTING THIS PHOENIX AFTER BOTH THE WINGS HAVE BEEN SHOT DOWN)

BONUS THE HIGHEST POINTS OF 9,000 POINTS CAN BE SCORED WHEN HITTING ENEMY COMMANDER IN MOTHER SHIP.

INSTRUCTIONS

1. *INSERT COIN(S) INTO SLOT.*
2. *SELECT 1 OR 2 PLAYER BUTTON.*
3. *MOVE THE SPACESHIP RIGHT AND LEFT, DODGING FROM ATTACK OF PHOENIX AND DESTROYING IT BY FIRING BUTTON.*
4. SHELTER SPACESHIP BY PRESSING FORCE FIELD BUTTON.
5. ADDITIONAL SPACESHIP IS ADDED WHEN BONUS SCORE IS ACHIEVED.
6. THE GAME IS OVER WHEN ALL THE SPACESHIPS HAVE BEEN DESTROYED.

INSTRUCTIONS

1. INSERT COIN(S) INTO SLOT.

2. SELECT 1 OR 2 PLAYER BUTTON.

3. MOVE THE SPACESHIP RIGHT AND LEFT. DODGING FROM ATTACK OF PHOENIX AND DESTROYING IT BY FIRING BUTTON.

4. SHELTER SPACESHIP BY PRESSING FORCE FIELD BUTTON.
5. ADDITIONAL SPACESHIP IS ADDED WHEN BONUS SCORE IS ACHIEVED.
6. THE GAME IS OVER WHEN ALL THE SPACESHIPS HAVE BEEN DESTROYED.

- INSERT COIN(S).
- SELECT GAME FOR ONE OR TWO PLAYERS.
- USE JOYSTICK TO MOVE YOUR SPACE SHIP TO THE LEFT OR TO THE RIGHT, AND FIRE BEAM GUN TO SHOOT PHOENIX ARMY.
- WHEN SCORE REACHES 3,000 & 30,000. POINTS ONE SPACE SHIP IS ADDED EACH TIME FOR THESE POINTS.
- A STRATEGY IS NEEDED TO AVOID PHOENIX. ARMY'S ATTACK BY PUSHING BARRIER BUTTON
- GAME IS OVER WHEN ALL SPACE SHIPS HAVE BEEN DESTROYED.

200PTS.···WHEN FLYING



20PTS.·····WHEN WAITING



40PTS.·····WHEN ATTACKING

(POINTS ARE DOUBLED IN CONTINUOUS HITTINGS.)



50PTS.·····WHEN STILL EGG

100PTS.·····WHEN FOLDING THE WINGS

100-800PTS.·····WHEN SPREADING THE WINGS

(HIGHER POINTS CAN BE SCORED WHEN HITTING THIS PHOENIX AFTER BOTH THE WINGS HAVE BEEN SHOT DOWN.)

BONUS THE HIGHEST POINTS OF 9,000 POINTS CAN BE SCORED WHEN HITTING ENEMY COMMANDER IN MOTHER SHIP



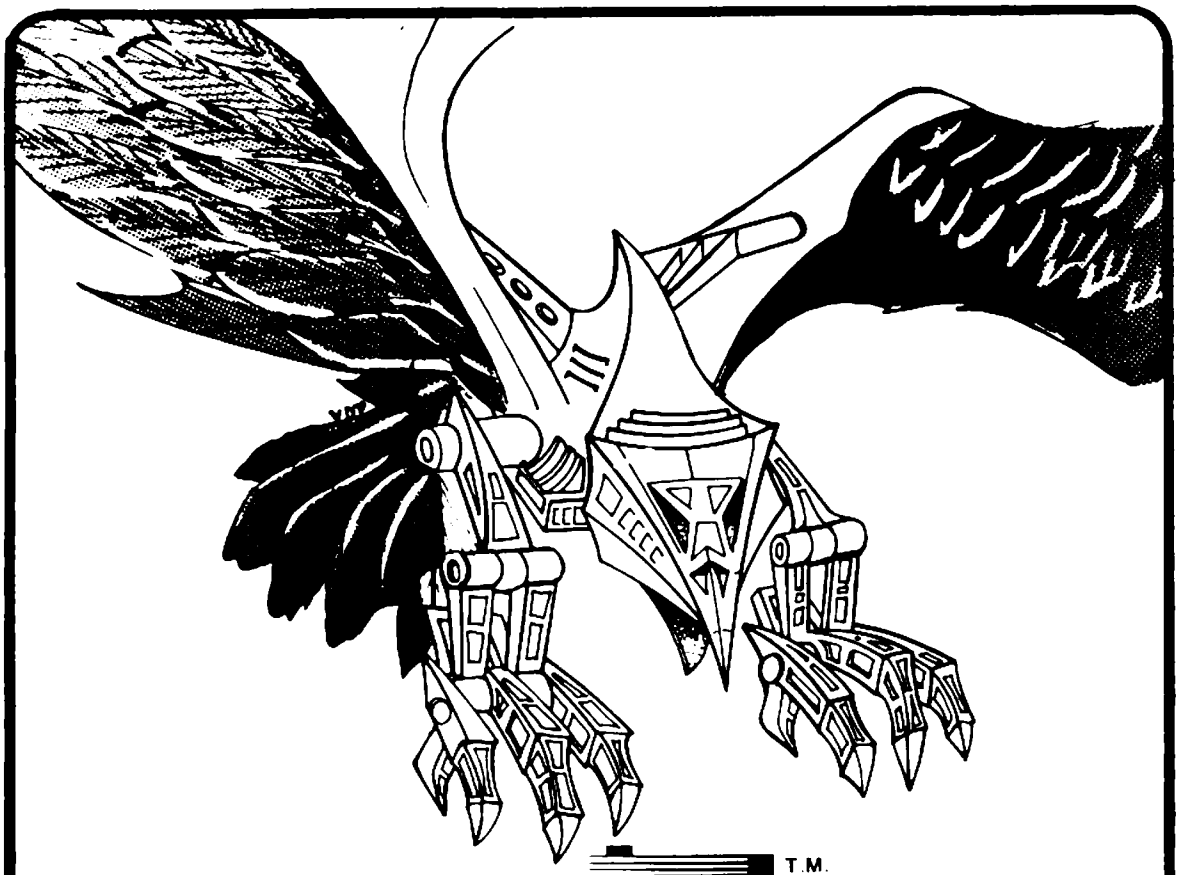

centuri T.M. , INC.

HIALEAH . FLORIDA . U.S.A

Phoenix ©

SERVICE MANUAL

364-62-0100 A

TABLE OF CONTENTS

		PAGE NO.
I.	INTRODUCTION:	
	USER INFORMATION - F.C.C.	1
	GAME DESCRIPTION (DIAGRAM)	2
	GAME SUMMARY	3, 4
II.	SPECIFICATIONS:	
	INSTALLATION	4
	ELECTRICAL REQUIREMENTS	4
	110/220 CONVERSION INSTRUCTIONS	5
III.	OPERATION:	
	GAME INSTRUCTIONS	6
	GAME SCORING	6
	ROUTINE MAINTENANCE AND SERVICE	7
	OPERATOR OPTIONAL SWITCH SETTINGS	8
	OPTIONAL SWITCH SETTINGS	8
IV.	GENERAL:	
	C.P.U. PARTS LIST	9, 10
	LOGIC BOARD PARTS LIST	11
	SHINDENGEN POWER SUPPLY PARTS LIST	12, 13
v.	DRAWINGS:	
	110/220 POWER INTERCONNECT DIAGRAM (361-10-0900)	14
	C.P.U. HARNESS INTERCONNECT DIAGRAM (364-10-1000)	15
	SHINDENGEN POWER SUPPLY SCHEMATIC (363-17-0300)	16
	C.P.U. BOARD SCHEMATIC (364-62-0900)	17
	LOGIC BOARD SCHEMATIC (364-62-0800)	18
	COIN DOOR WIRING DIAGRAM (364-62-1000)	19

USER INFORMATION - F.C.C.

WARNING:

This equipment generates, uses and can radiate radio frequency energy and if not installed and used in accordance with the instructions manual, may cause interference to radio communications. As temporarily permitted by regulation, it has not been tested for compliance pursuant to Subpart J of Part 15 of F.C.C. Rules, which are designed to provide reasonable protection against such interference. Operation of this equipment in a residential area is likely to cause interference in which case the user at his own expense will be required to take whatever measures may be required to correct the interference.

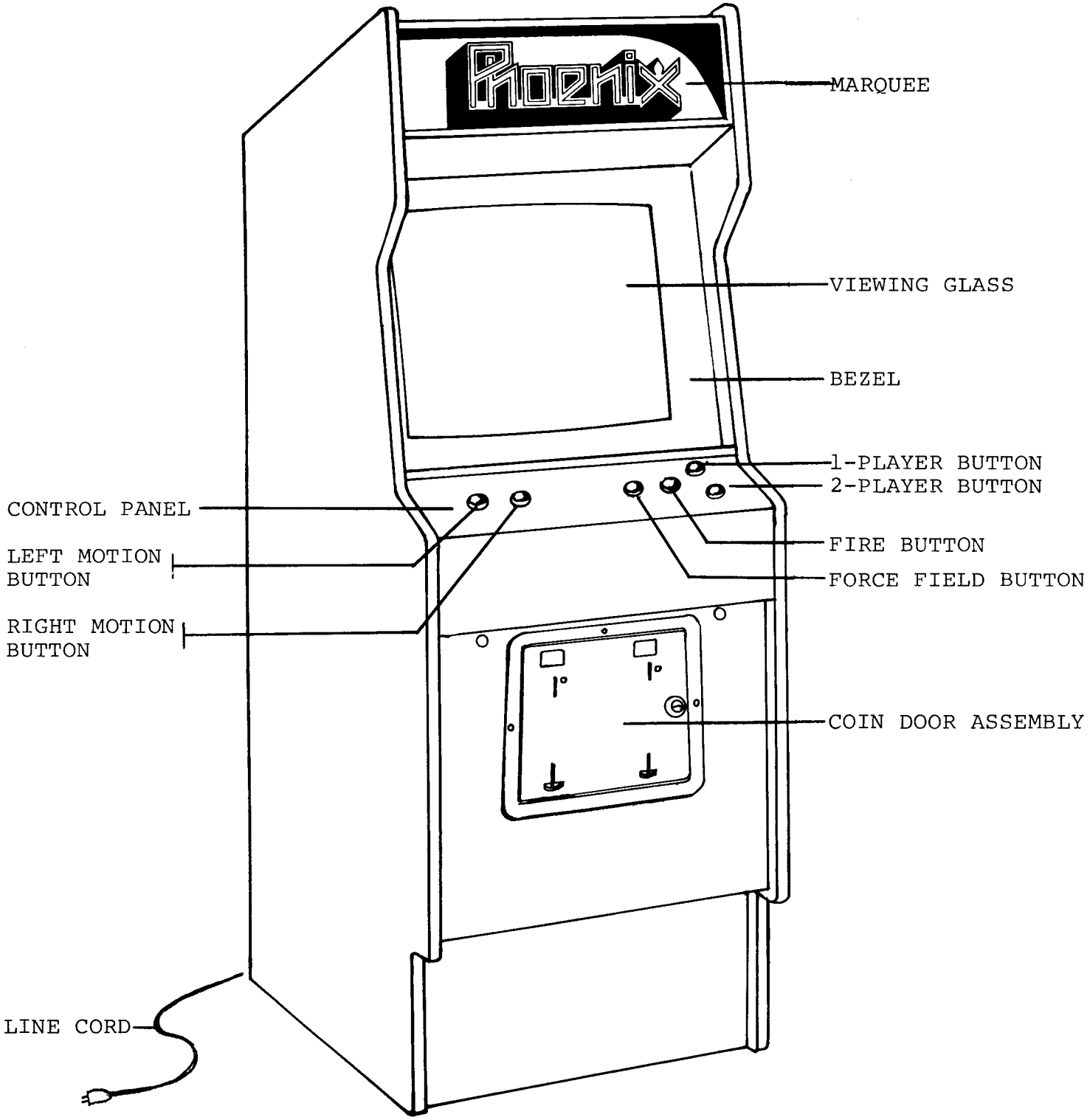

19" PHOENIX VIDEO UPRIGHT

PHOENIX

PHOENIX is an exciting new space game, with special audio and visual effects, challenging the skills of the most experienced player. Fascinating visual graphics and extraterrestrial sounds add to the intensity of this game.

There are five basic stages to each round of play. After a melodious introduction, the first stage begins with a wave of sixteen (16) small Phoenixes attacking the spaceship. They drop missiles and dive at the spaceship, in an effort to destroy it.

The spaceship maneuvers left and right, evading the missiles and birds, and fires rockets, attempting to destroy the birds.

The spaceship can utilize the "Force Field" as a means of protection from the missiles and birds, and can destroy the Phoenixes by colliding with them while in the Force Field. The Force Field only lasts a few seconds and then cannot be used for approximately five (5) seconds afterward.

After the first wave of Phoenixes are destroyed, a second wave appears, and can be destroyed in the same manner as in the first stage.

The third stage begins with a wave of eight (8) "Eggs" that are transformed into blue Phoenix birds that attack the spaceship. These birds can be destroyed by rocket fire from the spaceship. If the rocket hits the bird on center, the bird is destroyed. If the rocket hits the bird to the left or right of center, only that wing of the bird is destroyed. The wing will regenerate itself in a short time.

After all the blue Phoenixes have been shot down, the fourth stage appears on the screen. Two banks of eggs appear (four eggs in each row), and are transformed into pink Phoenixes, and can be destroyed in the same manner as the blue birds.

The fifth stage is the attack of the spacefortress, which sends down waves of small birds to attack the spaceship, in addition to direct missile fire from the spacefortress. Spaceship rocket fire can penetrate and break down the protective barrier shielding the space creature in the spacefortress. The fifth stage

is completed when the rocket from the spaceship destroys the space creature and the spacefortress with a direct hit.

Good aim and timing are critical to high scoring. Birds destroyed while in flight (with wings flapping), will score 200 points each, and eggs hit in the process of hatching also have higher point values.

Delayed destruction of the spacefortress also gives the player high point values.

When bonus levels are achieved, additional spaceships are added to your game. The bonus level may be adjusted to award bonus spaceships at 3,000 and 30,000 points, 4,000 and 40,000 points, 5,000 and 50,000 points, or 6,000 and 60,000 points.

INSTALLATION

Your game was shipped from the factory in ready-to-play condition. A brief inspection is suggested before the machine is removed from the carton. If there is damage to the shipping carton, contact the freight carrier for claim purposes. External damage could indicate possible damage to the cabinet and/or electronic components.

After the carton has been satisfactorily inspected, remove the machine from the shipping carton.

Examine the interior of the game for disconnected wires, cables or harnesses and make sure electronic devices are securely mounted in their sockets, etc. Record the game serial number, since it will be required for reference and servicing.

ELECTRICAL REQUIREMENTS

Unless otherwise specified, this game is set to operate at 110 Volts A.C. See Figure -1- for 110/220 VAC conversion instructions.

Power Supply Chassis schematic information and parts list are included in this manual.

FIGURE -1-

110/220 VAC CONVERSION INSTRUCTIONS

1. This video arcade game has a harnessing configuration that allows the machine to be operated from either a 110 VAC or 220 VAC @ 50 or 60 H_Z power source, with only minor changes. The only items requiring a change are the fuses and the jumper plug on the game power transformer.

2. First, unplug the machine from the wall outlet to completely eliminate shock hazards.

3. Next, remove the two fuses in the A.C. distribution bracket.

4. Then, remove the jumper plug on the game power transformer located on the floor of the machine.

5. Now, depending on what voltage you wish to run the game from, do the following:

   110 VAC: Replace the two fuses that go in the bracket with 3-AMP SLOW-BLOW types. Next, plug in the ORANGE jumper plug labeled 110 VAC. The machine can now be operated with an input voltage of 110 Volts AC.

   220 VAC: Replace the two fuses that go in the bracket with 1½ AMP SLOW-BLOW types. Next, plug in the RED jumper plug labeled 220 VAC. The machine can now be operated with an input voltage of 220 Volts AC.

NOTE: All games shipped from CENTURI, INC. are in the 110 VAC configuration.

GAME INSTRUCTIONS:

1. INSERT COIN(S) INTO SLOT.
2. SELECT 1 OR 2 PLAYER BUTTON.
3. MOVE THE SPACESHIP RIGHT AND LEFT, DODGING FROM ATTACK OF PHOENIX AND DESTROYING IT BY FIRING BUTTON.
4. SHELTER SPACESHIP BY PRESSING FORCE FIELD BUTTON.
5. ADDITIONAL SPACESHIP IS ADDED WHEN BONUS SCORE IS ACHIEVED.
6. THE GAME IS OVER WHEN ALL THE SPACESHIPS HAVE BEEN DESTROYED.

GAME SCORING:

 = 20, 40 and 80 Points.

 = 200 Points.

 = 50 to 100 Points
(Hatching = 100 to 800 Points).

 = 1,000 to 9,000 Points.

ROUTINE MAINTENANCE & SERVICE

Because of the solid state electronic circuitry, this machine should require very little maintenance and only occasional adjustments. However, it is necessary to take measures to insure this.

The volume control is located on the bottom side of the printed circuit board farthest from the side of the cabinet, and can be accessed through the rear door.

The video monitor has been properly adjusted before shipping. Occasionally minor adjustments are necessary, see monitor specifications and schematics for technical information. Adjustment controls for the monitor are located at the rear of the monitor.

This machine should be serviced only by a qualified technician.

Do not make any adjustments on this machine while the power is on.

For service information, contact:

CENTURI, INC.

Customer Service Department

#800-327-7710 (Outside the state of Florida)

#305-556-5888 (In Florida)

OPERATOR OPTIONAL SWITCH SETTINGS

The option switches are located on the CPU board. The option switches and audio control can be reached through the back of the machine.

The following settings will assist you with your selections:

OPTIONAL SWITCH SETTINGS

Switches 1 and 2 control the number of times the player may have his spaceship destroyed before the game is over. The following truth table lists these switch settings:

SWITCH 1:	SWITCH 2:	NUMBER OF SPACESHIPS:
OFF	OFF	6
ON	OFF	5
OFF	ON	4
ON	ON	3

Switches 3 and 4 control the score at which one or two free spaceships are awarded according to the following truth table:

SWITCH 3:	SWITCH 4:	FIRST FREE SHIP SCORE:	SECOND FREE SHIP SCORE:
OFF	OFF	6,000	60,000
ON	OFF	5,000	50,000
OFF	ON	4,000	40,000
ON	ON	3,000	30,000

SWITCH 5: OFF - 25¢ PER GAME.
ON - 50¢ PER GAME.

Switches 6, 7 and 8 are factory adjustments, and must be left in OFF position.

PARTS LIST

NO.	PART NUMBER:	DESCRIPTION:	USAGE:
1	50010249LS	74LS245 I.C.	1
2	50010252LS	74LS374 I.C.	3
3	50010273LS	74LS244 I.C.	2
4	50010275LS	74LS136 I.C.	1
5	50010248LS	74LS138 I.C.	4
6	50010221LS	74LS163 I.C.	3
7	50010045LS	74LS157 I.C.	3
8	50010002LS	74LS00 I.C.	4
9	50010096LS	74LS08 I.C.	3
10	50010141LS	74LS125 I.C.	1
11	50010105LS	74LS32 I.C.	4
12	50010170LS	74LS14 I.C.	1
13	50010019LS	74LS74 I.C.	3
14	50010026LS	74LS107 I.C.	1
15	50010030LS	74LS174 I.C.	1
16	50010276LS	74L470 I.C.	1
17	50010197	7405 I.C.	2
18	50010142	7407 I.C.	1
19	50010277	8085 C.P.U.	1
20	50020003	LM380 I.C.	1
21	50010254	LM324 I.C.	2
22	50010001	555 Timer I.C.	5
23	50010281	4006 I.C.	1
24	50020086	564 Transistor	1
25	50040082	.047 mfd, 25 V. Disc Ceramic Capacitor	13
26	50040001	.1mfd, 25 V. Disc Ceramic Capacitor	2
27	50040141	.001mfd, 50 V. Disc Ceramic Capacitor	7
28	50040151	330pf, 25 V. Disc Ceramic Capacitor	1
29	50040049	.01mfd, 25 V. Disc Ceramic Capacitor	2
30	50040153	.022mfd, 25 V., Disc Ceramic Capacitor	1
31	50060104	47mfd, 50 V. Alum. Lytic Rad. Cap.	4
32	50060031	100mfd, 25 V., Alum. Lytic Rad. Cap.	1
33	50060126	470mfd, 30 V., Alum. Lytic Rad. Cap.	1
34	50060120	10mfd, 16 V., Alum. Lytic Rad. Cap.	1
35	50060165	10 mfd,25 V., Dipped Tantalum Cap.	9
36	50060166	.47mfd, 35 V., Dipped Tantalum Cap.	1
37	50060163	1mfd, 35 V., Dipped Tantalum Cap.	2
38	50060145	6.8mfd, 25 V., Dipped Tantalum Cap.	2
39	50120004	10K PCB Trimmer Potentiometer	1
40	50360007	5-Pin Resistor, 1K Ohm	1
41	50360006	9-Pin Resistor Pack, 1K Ohm	3
42	50030256	100 Ohm, ¼W., 5% Resistor	8
43	50030051	1K Ohm, ¼ W., Resistor	12
44	50030056	2.7K Ohm, ¼ W., Resistor	2
45	50030063	10K Ohm, ¼W., 5% Resistor	16
46	50030014	270 Ohm, ¼W., 5% Resistor	9
47	50030150	47K Ohm, ¼W., 5% Resistor	9
48	50030095	330 Ohm, ¼W., 5% Resistor	2
49	50030007	100K Ohm, ¼W., 5% Resistor	4
50	50030010	470 Ohm, ¼W., 5% Resistor	2

CPU BOARD ASSEMBLY

#50330008

PARTS LIST

NO.	PART NUMBER:	DESCRIPTION:	USAGE:
51	50030086	33K Ohm, ¼W., 5% Resistor	6
52	50030197	5.1K Ohm, ¼W., 5% Resistor	3
53	50030265	510K Ohm, ¼W., 5% Resistor	2
54	50030266	20K Ohm, ¼W., 5% Resistor	1
55	50100014	1N914 Diode	7
56	50150214	8-Pin Solder Tail Socket, Low Profile	5
57	50150060	40-Pin Solder Tail Socket, Low Prof.	1
58	50150158	20-Pin Solder Tail Socket, Low Prof.	6
59	50150110	14-Pin Solder Tail Socket, Low Prof.	25
60	50150111	16-Pin Solder Tail Socket, Low Prof.	13
61	50150112	18-Pin Solder Tail Socket, Low Prof.	1
62	50040136	.05mf, Mylar Capacitor	1
63	50130034	8-Position Dip Switch	1
64	50150256	50-Pin PCB Header, Ainsley #609-5007ES	2
65	50210217	Printed Circuit Board - CPU	1
66	364-10-0300	P.C.B. Interconnect Cable	2

LOGIC BOARD ASSEMBLY #50330009

PARTS LIST

NO.	PART NUMBER:	DESCRIPTION:	USAGE:
1	5001022LS	74LS163 I.C.	4
2	50010022LS	74LS86 I.C.	4
3	50010019LS	74LS74 I.C.	1
4	50010274LS	74LS132 I.C.	1
5	50010262LS	74LS283 I.C.	3
6	50010252LS	74LS374 I.C.	3
7	50010093LS	74LS151 I.C.	4
8	50010030LS	74LS174 I.C.	4
9	50010045LS	74LS157 I.C.	4
10	50010249LS	74LS245 I.C.	2
11	50010005	7404 I.C.	1
12	50010185	2716 I.C.	12
13	50010242	2114 I.C.	8
14	50010273LS	74LS244 I.C.	1
15	50040082	.047mf, 25 V., Disc Ceramic Cap.	7
16	50040141	.001mf, 50 V., Disc Ceramic Cap.	2
17	50040049	.01mf, 25 V., Disc Ceramic Cap.	2
18	50040150	390pf, 25V., Ceramic Disc Cap.	1
19	50040001	.1mf, 25 V., Ceramic Disc Cap.	15
20	50040142	150 pf, 50 V., Disc Ceramic Cap.	1
21	50060028	22mf, Alum. Lytic Radial Cap.	1
22	50070014	11MH_Z Crystal	1
23	50030004	1.2K, ¼W., 5% Resistor	2
24	50030111	100 Ohm, ½W., 5% Resistor	1
25	50150110	14-Pin Solder Tail Socket, Low Profile	8
26	50150111	16-Pin Solder Tail Socket, Low Profile	19
27	50150112	18-Pin Solder Tail Socket, Low Profile	8
28	50150158	20-Pin Solder Tail Socket, Low Profile	6
29	50150061	24-Pin Solder Tail Socket, Low Profile	12
30	50150256	50-Pin P.C.B. Header, Ansley#609-5007ES	2
31	50210216	P.C. Board, Logic	1

PARTS LIST - SHINDENGEN POWER SUPPLY

SYMBOL:	DESCRIPTION:	USAGE:
T1	Transformer, Single Phase, 24 VA	1
L1	Choking Coil, 1.6 mH, 1.5A	1
L2, L4	Choking Coil, SF-T8-50S-03	2
L3	Choking Coil, SF-HP-2A-03	1
D1	Diode, V19G	1
D2	Diode, V06C	1
D3, D6	Diode, 1S1588	2
D4	Diode, S15S3	1
D5, D7	Diode, 5CH1M	2
D12, D13	Diode, F113B	2
D14	Diode, F113B	1
RF1	Diode,S4VB40 (Bridge Type)	1
Q1	Transistor, 2SC2504	1
Q2	Transistor, 2SD467 (B)	1
Q3	Transistor, 2SC460(B)	1
Q4	Transistor, 2SA673(B)	1
IC1	Integrated Circuit, RM723DC or HA17723G-02	1
PC1	Photo Coupler, PS2001	1
R1	Resistor, 2 Watt, 18 Ohm	1
R8, R9	Resistor, 2 Watt, 47K Ohm	2
R3, 1-4	Resistor, 2 Watt, 15 Ohm	4
R4	Resistor, 1 Watt, 56 Ohm	1
R12	Resistor, 1 Watt, 100 Ohm	1
R28	Resistor, 1 Watt, 470 Ohm	1
R7	Resistor, 1 Watt, 0.56 Ohm	1
R26	Resistor, 1 Watt, 0.82 Ohm	1
R23	Resistor, 1/4 Watt, 22 Ohm	1
R10	Resistor, 1/4 Watt, 33 Ohm	1
R27	Resistor, 1/4 Watt, 68 Ohm	1
R2	Resistor, 1/4 Watt, 330 - 470 Ohm	1
R22	Resistor, 1/4 Watt, 220 Ohm	1
R21	Resistor, 1/4 Watt, 270 Ohm	1
R6	Resistor, 1/4 Watt, 330 Ohm	1
R11	Resistor, 1/4 Watt, 68 Ohm	1
R20	Resistor, 1/4 Watt, 470 Ohm	1
R17	Resistor, 1/4 Watt, 680 Ohm	1
R19	Resistor, 1/4 Watt, 800 Ohm	1
R18	Resistor, 1/4 Watt, 1.2K Ohm	1
R5	Resistor, 1/4 Watt, 10K Ohm	1
R16	Resistor, 1/4 Watt, 220K Ohm	1
R29	Resistor, 3 Watt, 27 Ohm	1
R39	Resistor, 1/4 Watt, 4.7K Ohm	1
R38	Resistor, 1/4 Watt, 5.6K Ohm	1
R24	Resistor, 1/4 Watt, 330 Ohm	1
R25	Resistor, 1/4 Watt, 150 Ohm	1
RV1	Variable Resistor, RJ-6P501	1

PARTS LIST - SHINDENGEN POWER SUPPLY

SYMBOL:	DESCRIPTION:	USAGE:
C1, C2	Capacitor, ECK-DAL102E	2
C3-1,-2	Capacitor, 160VSN100	2
C9, C10	Capacitor, SM10VB-2200	2
C11, C23	Capacitor, SM10VB-2200	2
C12, C13,C15	Capacitor, SL25VB-10	3
C27	Capacitor, SL25VB-10	1
C18,C19,C20	Capacitor, SM35VB-1000	3
C26	Capacitor, SM35VB-1000	1
C21,C22,C25	Capacitor, SM16VB-1000	3
C5	Capacitor, DMY21H472K	1
C6	Capacitor, DMY21H104K	1
C14,C16	Capacitor, DMY21H222K	2
C4	Capacitor, CM20XC511K5	1
C8	Capacitor, MDD22G473K	1
C5-2	Capacitor, DMY21H222K	1
F1, F2	Enclosed Type Fuse, 3A	2

THE MATERIAL CONTAINED HEREIN IS CONFIDENTIAL
AND NO PART OF IT CAN BE REPRODUCED WITHOUT THE
EXPRESSED PERMISSION OF ALLIED LEISURE IND., INC.

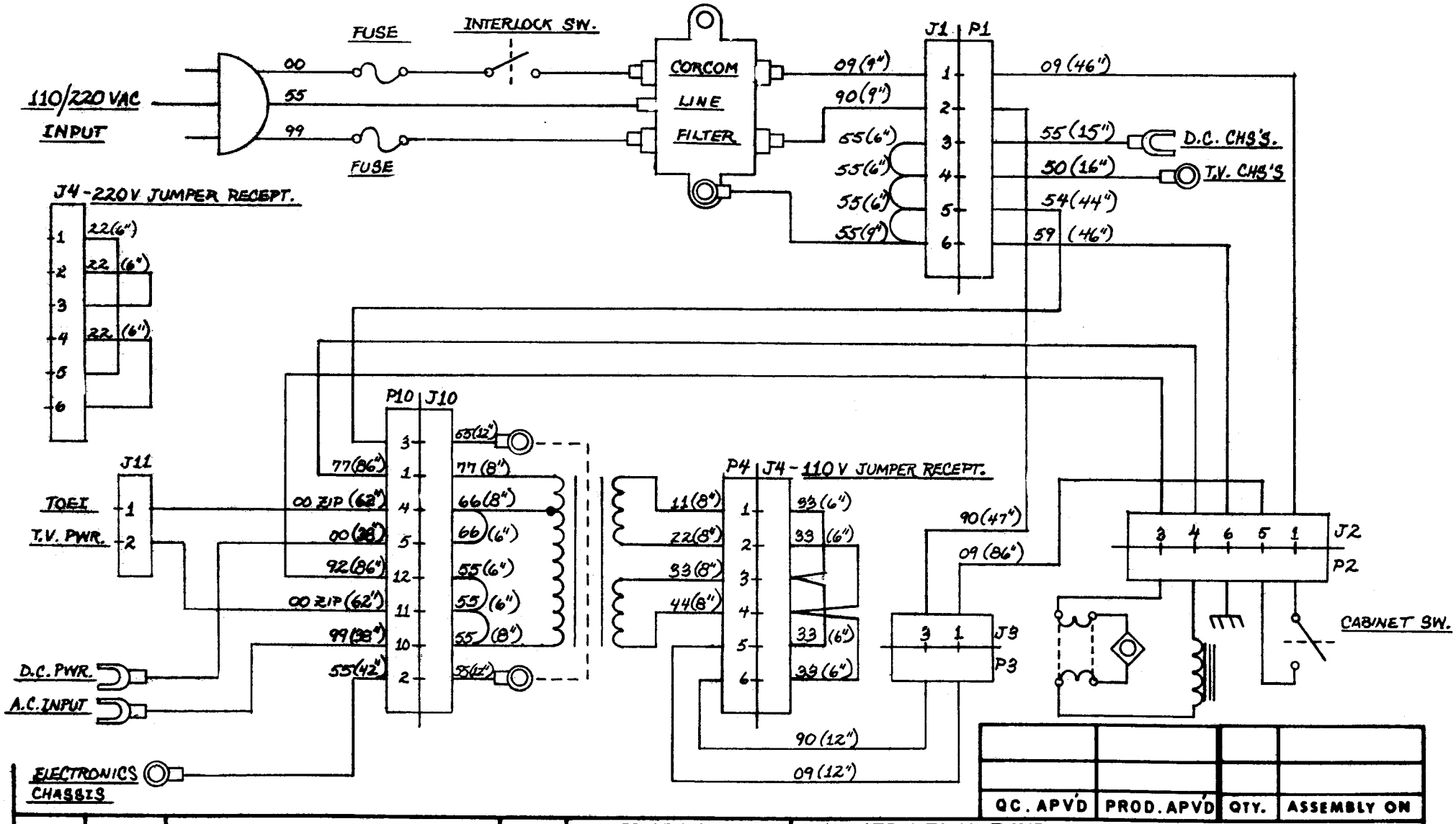

QC. APV'D	PROD. APV'D	QTY.	ASSEMBLY ON

REV. LET.	ECN N	REVISION	BY

TOLERANCES
Unless Otherwise Specified

FRACTIONS	±	1/32
DECIMALS 2 PL	±	.015
DECIMALS 3 PL	±	.006
HOLES	+	.003
	−	.001
ANGLES	±	1/2°
SHT. MET BENDS	±	2°

ALLIED LEISURE INDUSTRIES, INC.
HIALEAH, FLORIDA. 33014

NAME: PHOENIX - 19" : 110/220 V POWER INTERCONNECT DIAG.

MATL'S.	HEAT TREAT.	FINISH

DWN. ED LENHARDT	APP'D.	DATE 1-14-81	SCALE	PART NO. 361-10-0900	REV.

THE MATERIAL CONTAINED HEREIN IS CONFIDENTIAL AND NO PART OF IT CAN BE REPRODUCED WITHOUT THE EXPRESSED PERMISSION OF ALLIED LEISURE IND., INC.

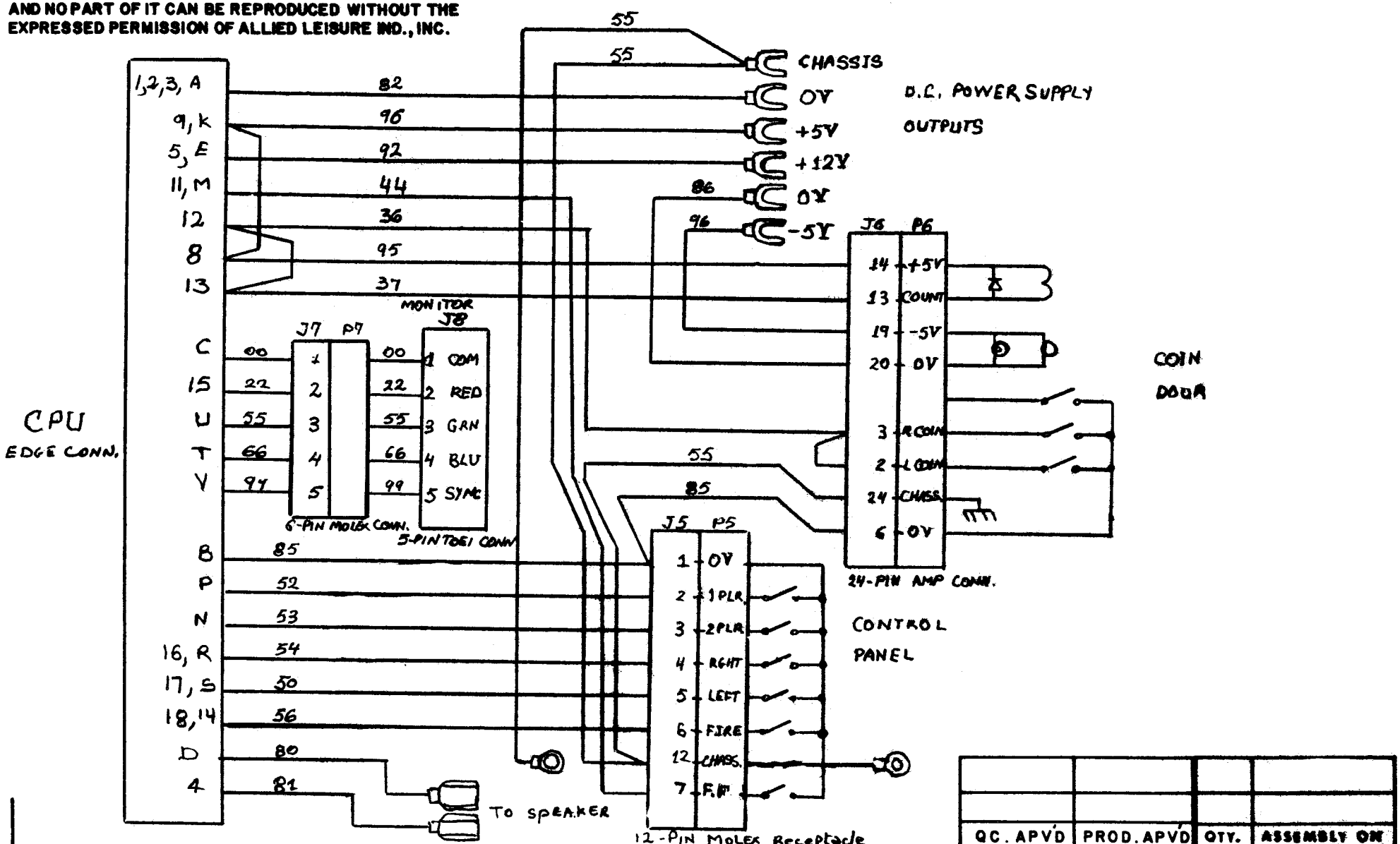

QC. APV'D	PROD. APV'D	QTY.	ASSEMBLY ON

REV. LET.	ECN N	REVISION	BY

TOLERANCES
Unless Otherwise Specified

FRACTIONS	±	1/32
DECIMALS 2 PL	±	.015
DECIMALS 3 PL	±	.005
HOLES	+	.003
	−	.001
ANGLES	±	1/2°
SHT. MET BENDS	±	2°

ALLIED LEISURE INDUSTRIES, INC.
HIALEAH, FLORIDA. 33014

NAME: CPU HARNESS INTERCONNECT DIAGRAM

MATL'S.	HEAT TREAT.	FINISH

DWN.	APP'D.	DATE	SCALE	PART NO.	REV.
				364-10-1000	

REVISIONS						
REV. LETTER	ITEM NO.	ECN NO.	DESCRIPTION	DISPOSITION OF EXISTING PARTS		ENGR'G APP'D
				RE-WORK	SCRAP	

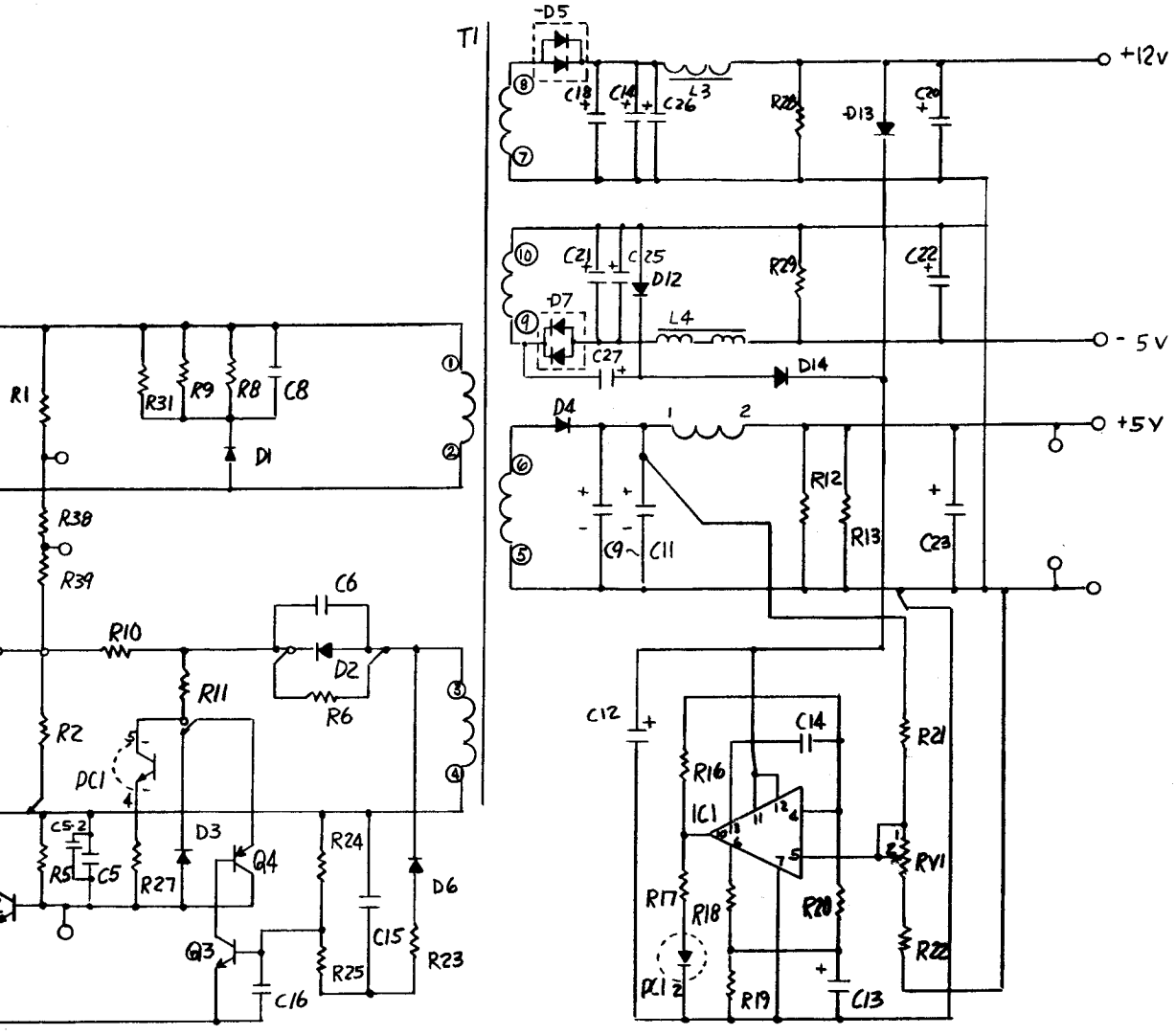

NEXT ASSEMBLY			

TOLERANCES		
UNLESS OTHERWISE SPECIFIED		
FRACTIONS	±	1/32
DECIMALS	±	.03
DECIMALS	±	.010
HOLES	±	.002 .000
ANGLES	±	1/2°

CENTURI, INC.
1780 W. 4th AVENUE HIALEAH, FLORIDA 33010

TITLE:
SHINDENGEN POWER SUPPLY SCHEMATIC

DWN	APP'D	DATE	SCALE	DWG NO.	REV.
AAN		1-14-81		363-17-0300	

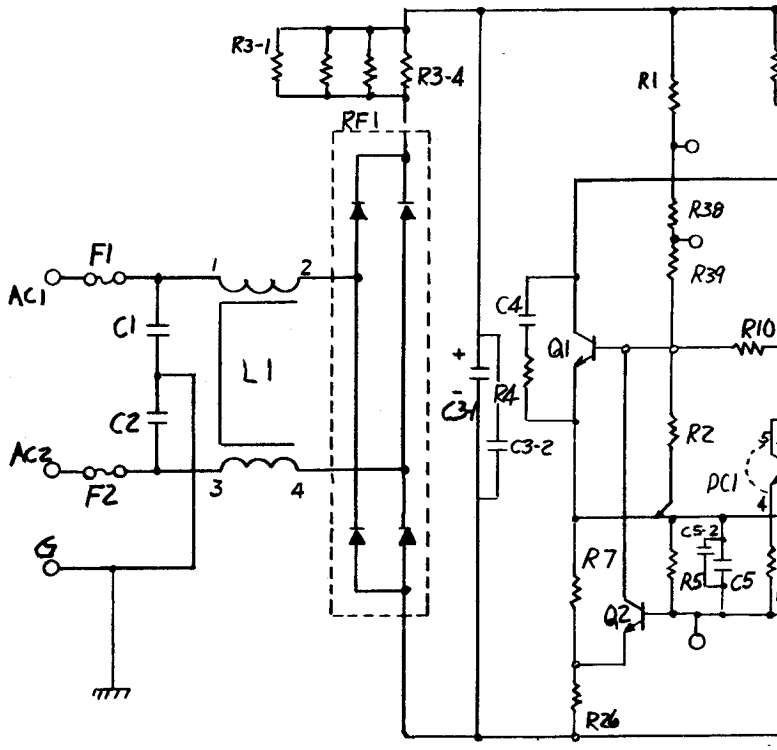
R3-1
R3-4
RF1
R1
R38
R39
F1
AC1
1
2
C1
L1
C2
AC2
F2
3
4
G
C4
Q1
R10
+
C3-1
R4
C3-2
R2
5
PC1
4
C5-2
R7
R5
C5
Q2
R26

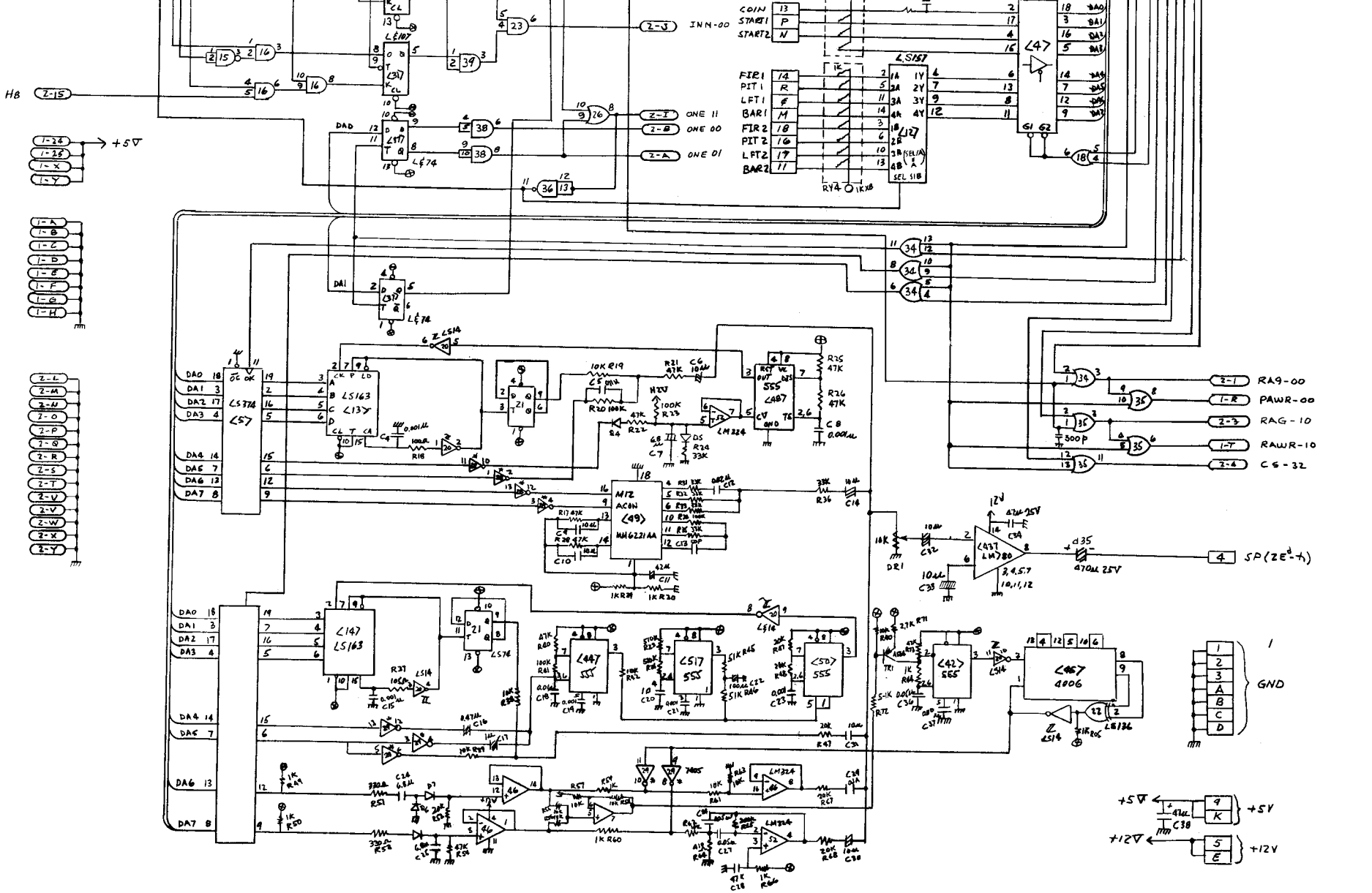
COIN
START1
START2
INN-00
ONE 11
ONE 00
ONE 01
FIR1
PIT 1
LFT1
BAR1
FIR 2
PIT 2
LFT2
BAR2
SEL S1B
RA9-00
PAWR-00
RAG-10
RAWR-10
CS-32
SP(ZE-th)
GND
+5V
+12V
CENTURI, INC.
HIALEAH, FLORIDA. 33014
CPU Bd SCHEMATIC (PHOENIX)
364-62-0900
11-24-80
AAN

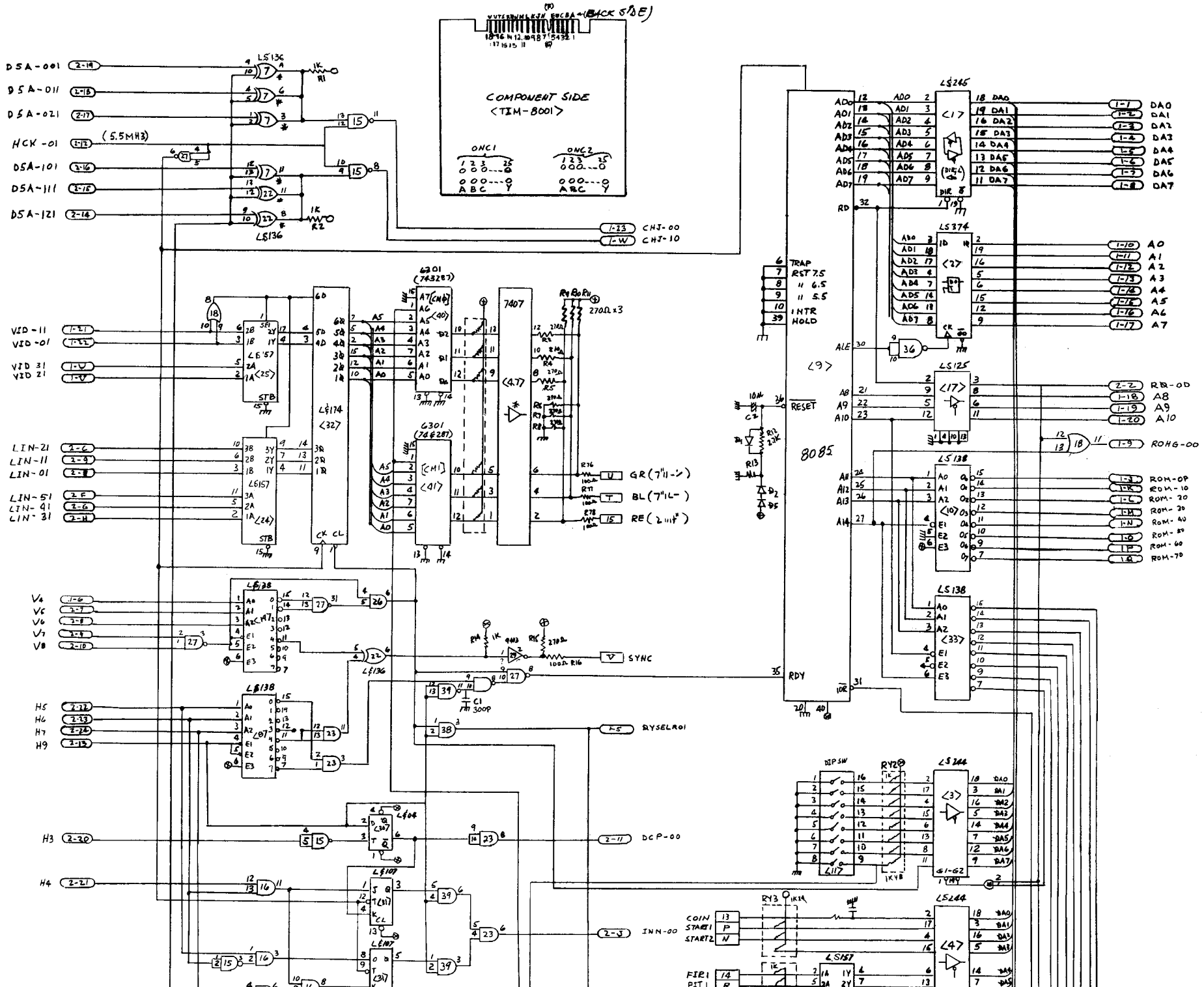

COMPONENT SIDE
<TIM-8001>
(BACK SIDE)
ONC1
ONC2
D5A-001
D5A-011
D5A-021
HCK-01
(5.5MHz)
D5A-101
D5A-111
D5A-121
LS136
CHJ-00
CHJ-10
VID-11
VID-01
VID 31
VID 21
LIN-21
LIN-11
LIN-01
LIN-51
LIN-41
LIN-31
V4
V5
V6
V7
V8
H5
H6
H7
H9
H3
H4
LS157
LS174
6301
7407
GR
BL
RE
SYNC
DYSELR01
DCP-00
INN-00
COIN
START1
START2
FIR1
PIT1
8085
TRAP
RST 7.5
6.5
5.5
INTR
HOLD
RESET
RDY
LS245
LS374
LS125
LS138
LS244
DIP SW
RY2
RY3
DA0
DA1
DA2
DA3
DA4
DA5
DA6
DA7
A0
A1
A2
A3
A4
A5
A6
A7
RD-00
A8
A9
A10
ROHG-00
ROM-0P
ROM-10
ROM-20
ROM-30
ROM-40
ROM-50
ROM-60
ROM-70

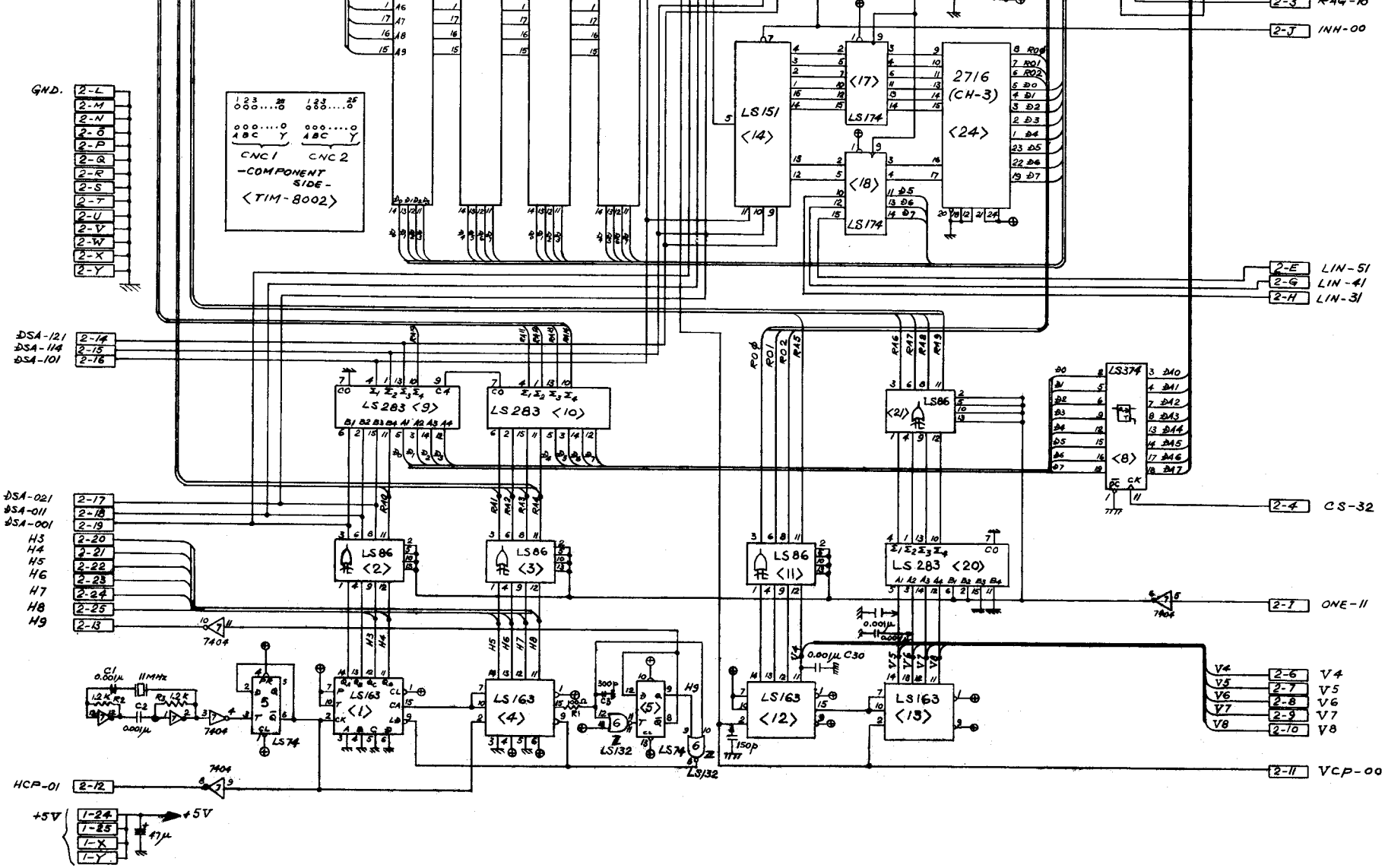

QC. APVD	PROD. APVD	QTY.	ASSEMBLY ON

TOLERANCES
Unless Otherwise Specified

FRACTIONS	±	1/32
DECIMALS 2 PL.	±	.015
DECIMALS 3 PL.	±	.005
HOLES	+	.003
	−	.001
ANGLES	±	1/2°
SHT. MET BENDS	±	2°

CENTURI, INC.
HIALEAH, FLORIDA 33014

NAME: LOGIC Bd SCHEMATIC (PHOENIX)

MAT'L. | HEAT TREAT. | FINISH

DATE: 11-22-80 | SCALE: — | PART NO.: 364-62-0800

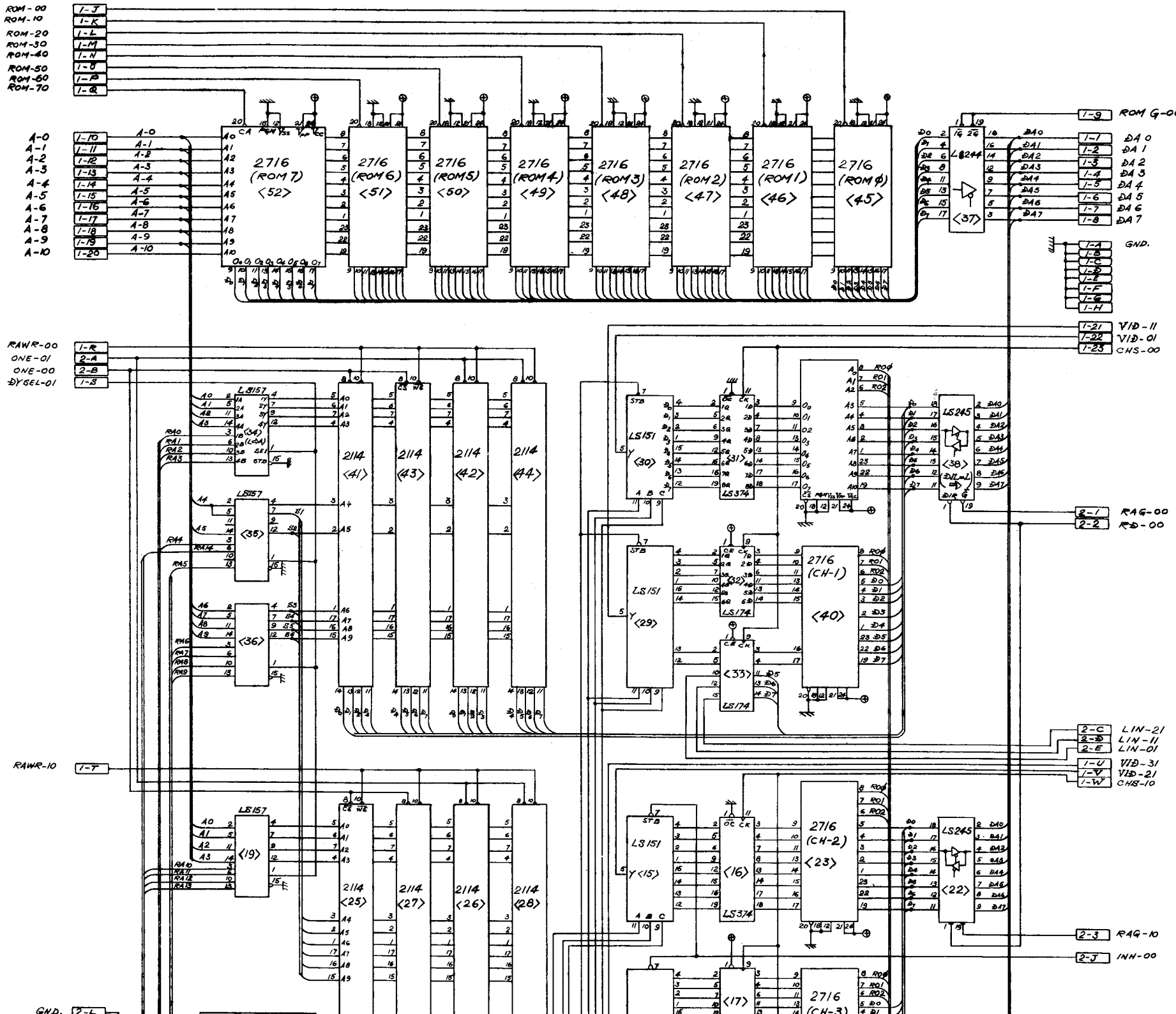
ROM-00
ROM-10
ROM-20
ROM-30
ROM-40
ROM-50
ROM-60
ROM-70
1-J
1-K
1-L
1-M
1-N
1-O
1-P
1-Q
A-0
A-1
A-2
A-3
A-4
A-5
A-6
A-7
A-8
A-9
A-10
1-10
1-11
1-12
1-13
1-14
1-15
1-16
1-17
1-18
1-19
1-20
2716 (ROM7) <52>
2716 (ROM6) <51>
2716 (ROM5) <50>
2716 (ROM4) <49>
2716 (ROM3) <48>
2716 (ROM2) <47>
2716 (ROM1) <46>
2716 (ROMØ) <45>
LS244 <37>
1-9 ROM G-00
1-1 DA 0
1-2 DA 1
1-3 DA 2
1-4 DA 3
1-5 DA 4
1-6 DA 5
1-7 DA 6
1-8 DA 7
GND.
1-A
1-B
1-C
1-D
1-E
1-F
1-G
1-H
RAWR-00
ONE-01
ONE-00
DYSEL-01
1-R
2-A
2-B
1-S
1-21 VID-11
1-22 VID-01
1-23 CHS-00
LS157 <34>
LS157 <35>
LS157 <36>
2114 <41>
2114 <43>
2114 <42>
2114 <44>
LS151 <30>
LS374 <31>
LS151 <32>
LS174 <33>
2716 (CH-1) <40>
LS245 <38>
2-1 RAG-00
2-2 RD-00
RAWR-10
1-T
LS157 <19>
2114 <25>
2114 <27>
2114 <26>
2114 <28>
LS151 <15>
LS374 <16>
2716 (CH-2) <23>
LS245 <22>
2-C LIN-21
2-D LIN-11
2-E LIN-01
1-U VID-31
1-V VID-21
1-W CHB-10
2-3 RAG-10
2-J INH-00
GND. 2-L
LS151 <17>
2716 (CH-3)

REVISIONS						
REV. LETTER	ITEM NO.	ECN NO.	DESCRIPTION	DISPOSITION OF EXISTING PARTS		ENGR'G APP'D
				RE-WORK	SCRAP	

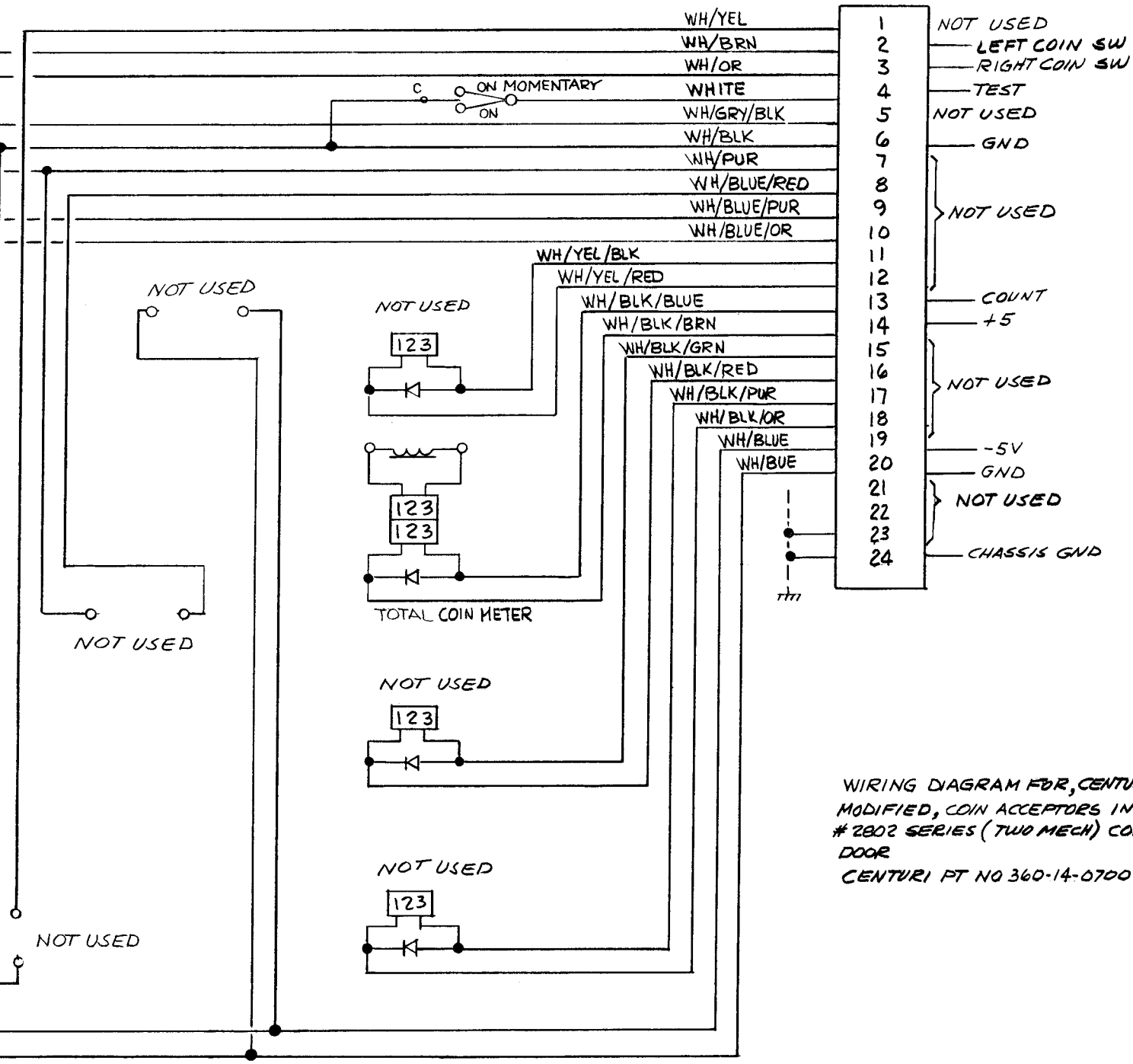

WIRING DIAGRAM FOR, CENTURI MODIFIED, COIN ACCEPTORS INC., #2802 SERIES (TWO MECH) COIN DOOR
CENTURI PT NO 360-14-0700

NEXT ASSEMBLY					

TOLERANCES UNLESS OTHERWISE SPECIFIED		
FRACTIONS	±	1/32
DECIMALS	±	.03
DECIMALS	±	.010
HOLES	±	.002 .000
ANGLES	±	1/2°

CENTURI, INC.
1780 W. 4th AVENUE HIALEAH, FLORIDA 33010

TITLE: COIN DOOR WIRING DIAGRAM

DWN	APP'D	DATE	SCALE	DWG NO.	REV.
A.A.N.	C.R.L.	1-22-81	NONE	360-62-1000	

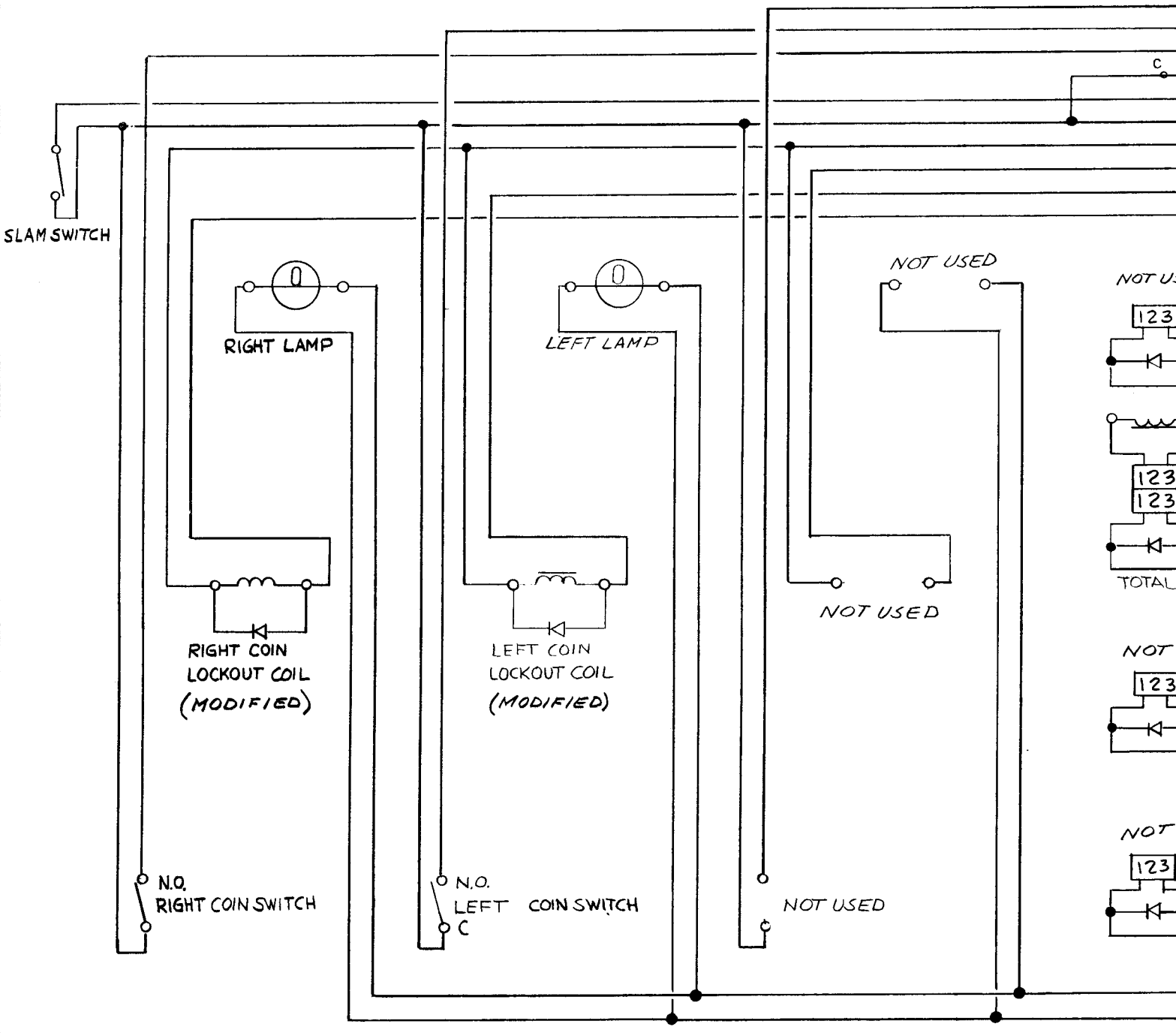

NEXT AS

BRUNING 40-21 19207