
ATARI
QUANTUM
ATARI
© 1982 ATARI INC.
039525-01-REV.A

INSTRUCTIONS

- CHOOSE STARTING RACK BY CIRCLING NUMBER USING TRAK-BALL™
- MOVE COMET BY ROLLING TRAK-BALL™ TO CIRCLE OBJECTS
- HITTING OBJECTS WILL DESTROY COMET
- COLLECT DOUBLE POINTS FOR CIRCLING MORE THAN ONE OBJECT AT ONCE

NUCLEUS	PHOTON	POSITRON	ELECTRON	SPLITTER	PULSAR	BOND DEADLY
						
300 PTS	200 PTS	200 PTS	20 PTS	400 PTS	100 PTS	WHEN RED

APHICS, COMPUTER PROGRAM AND AUDIO-VISUAL WORK © 1982 ATARI, INC.

TM-221
1st printing

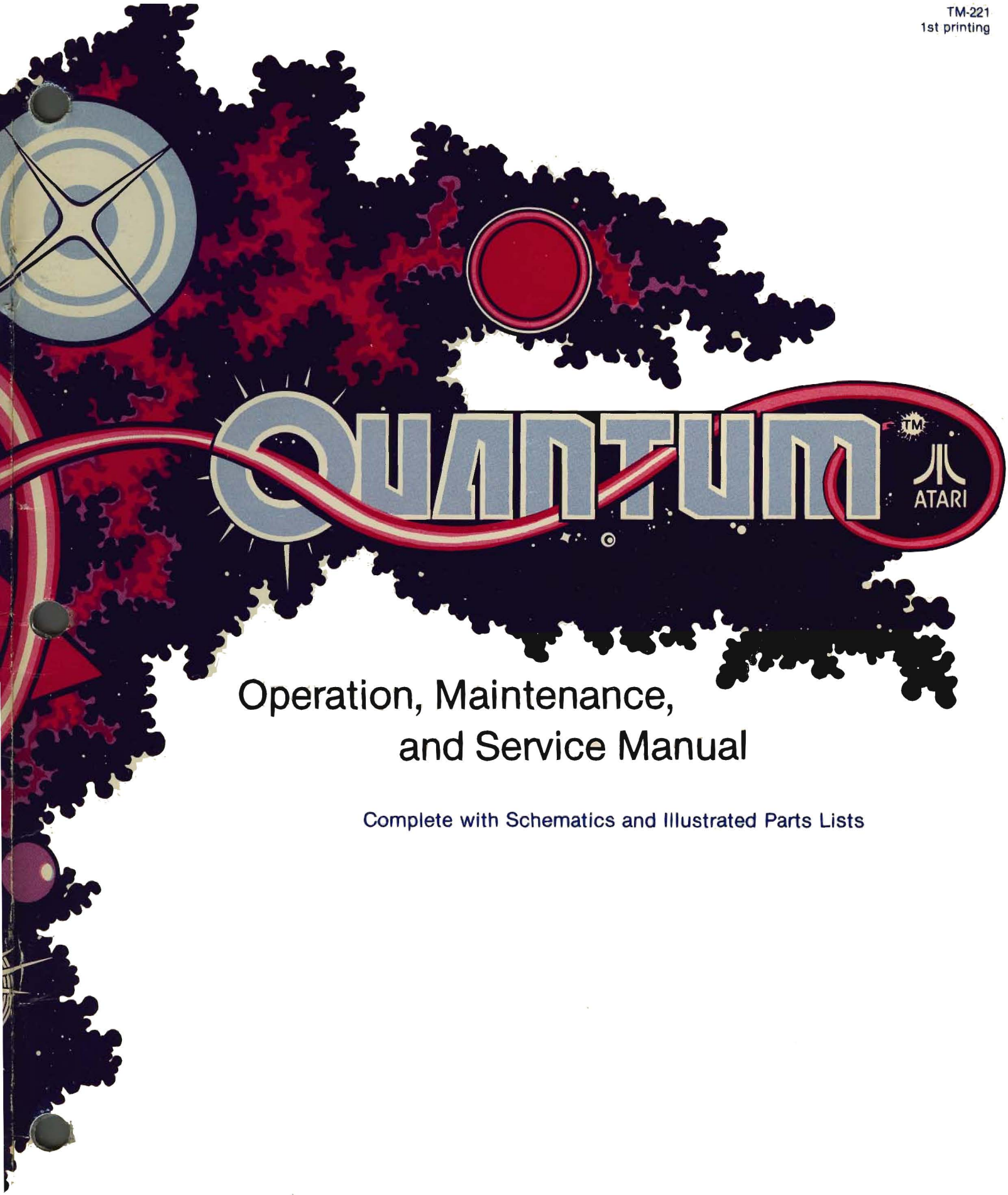

Operation, Maintenance, and Service Manual

Complete with Schematics and Illustrated Parts Lists

If reading through this manual does not lead to solving a certain maintenance problem, call TELEHELP® at the Atari Customer Service office in your geographical area, as shown below.

WEST and CENTRAL U.S.A.

Parts and Service

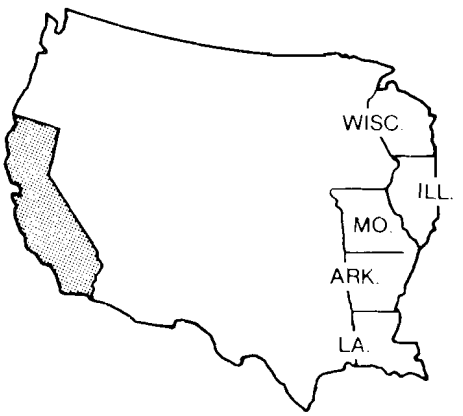

Atari, Inc.
California Customer Service Office
1105 N. Fair Oaks Avenue
P. O. Box 427, Sunnyvale, CA 94086
Telex 17-1103
(Monday–Friday, 7:30–4:00 pm Pacific Time)

☎ From California, Alaska, or Hawaii
(408) 745-2900

☎ Service from anywhere in the area shown in white
toll-free **(800) 538-1611**

EAST U.S.A.

Service only



Atari, Inc.
New Jersey Customer Service Office
12A World's Fair Drive, Somerset, NJ 08873
Telex 37-9347
(Monday–Friday, 7:30–4:00 pm Eastern time)

☎ From New Jersey
(201) 469-5993

☎ From anywhere else in this area
toll-free **(800) 526-3849**

EUROPE

Parts and Service

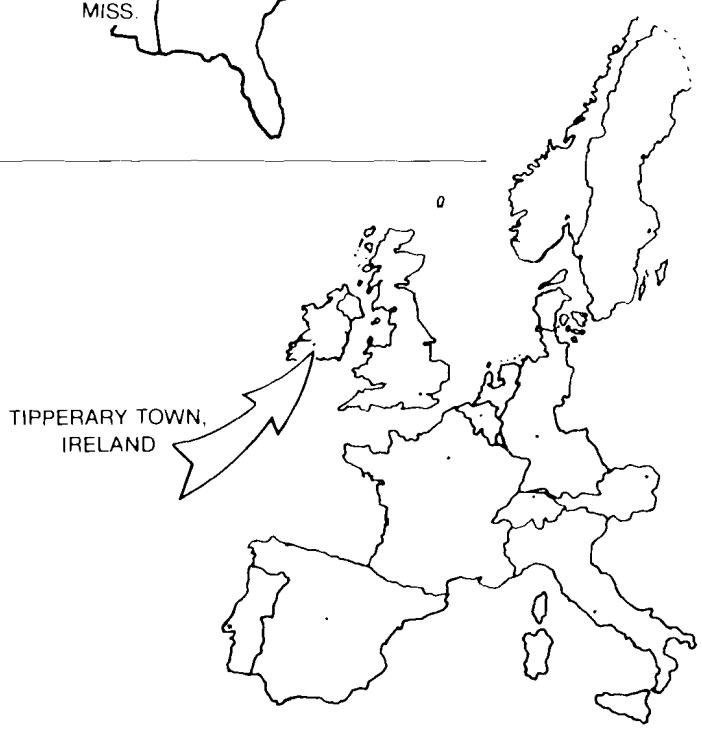

Atari Ireland Limited
European Customer Service Office
Tipperary Town, Ireland
Telex 28165
(Monday–Friday, 9:00–6:00 pm GMT)

☎ 062-52155



Operation, Maintenance, and Service Manual

Complete with Schematics and Illustrated Parts Lists



© 1982 by Atari, Inc. All rights reserved.

No part of this publication may be reproduced by any mechanical, photographic, or electronic process, or in the form of a phonographic recording, nor may it be stored in a retrieval system, transmitted, or otherwise copied for public or private use, without permission from the publisher.

The game play, all graphic designs, this technical manual, its accompanying schematic diagrams, and the display manual are protected by the U.S. Copyright Act of 1976.

This Act provides for increased penalties for violating federal copyright laws. Courts ***can impound*** infringing articles while legal action is pending. If infringers are convicted, courts can ***order destruction*** of the infringing articles.

In addition, the Act provides for payment of statutory damages of up to $50,000 in certain cases. Infringers may also have to pay costs and attorneys' fees, fines up to $25,000, and face an imprisonment of up to one year.

Atari will aggressively enforce its copyrights against any infringers. ***We will use all legal means*** to immediately halt any manufacture, distribution, or operation of a copy of video games made by us. Anyone who purchases such copies risks forfeiting such a game.

Published by:
ATARI, INC.
790 Sycamore Drive
P.O. Box 906
Milpitas, California 95035

Lithographed in the U.S.A. **12L**

Notice Regarding Non-ATARI Parts

WARNING

Use of non-ATARI parts or modifications of your ATARI® game circuitry may adversely affect the safety of your game, and injure you or your players.

You may void the game warranty (printed on the inside back cover of this manual) if you do any of the following:

- substitute non-ATARI parts in the game
- modify or alter any circuits in the game by using kits or parts *not* supplied by Atari.



to licensed communications services is not permitted by the Federal Communications Commission (FCC).

If you suspect interference from an ATARI® game at your location, check the following:

- all green ground wires in the game are properly connected as shown in the the game wiring diagram
- the power cord is properly plugged into a **grounded** 3-wire outlet
- the game PCB is properly installed within the Electromagnetic Interference (EMI) cage
- the EMI Shield PCB is properly installed and in series with the game PCB harness.

Refer to Figure 4-10 to make sure that the game PCB and the Shield PCB are correctly installed.

If you are still unable to solve the interference problem, please contact ATARI Customer Service. See the inside front cover for service in your area.

Table of Contents

1 Set-Up Procedures

A. New Features 1-3
B. Inspecting the Game 1-3
C. Space and Power Requirements 1-3
1. Installation Requirements 1-3
2. Selecting the Voltage Plug 1-3
D. Switch Locations 1-4
1. Power On/Off Switch 1-4
2. Utility Panel Switches 1-4
3. Option Switches 1-4
E. Setting the Option Switches 1-5
F. Game Play 1-6
1. Attract Mode 1-6
2. Select Mode 1-6
3. Play Mode 1-6
4. High-Score Mode 1-7
5. Hints for Game Play 1-7

2 Self-Test Procedure

A. Comments on Troubleshooting 2-2
B. Performing the Self-Test 2-2

3 Maintenance and Repair

A. Replacing the Fluorescent Tube 3-3
B. Replacing the Speakers 3-3
C. Video Displays and Display Printed-Circuit Boards 3-4
D. Control Panel 3-8
E. Midi Trak-Ball™ 3-10
F. Game and Regulator/Audio II Printed-Circuit Boards 3-12
G. Power Supply Fuses 3-14

4 Illustrated Parts Lists

A. Cabinet-Mounted Assemblies 4-2
B. Fluorescent Tube and Speaker Assembly 4-4
C. Video Display Assemblies 4-6
D. Control Panel Assembly 4-9
E. Midi Trak-Ball™ Assembly 4-10
F. Utility Panel Assembly 4-12
G. Coin Door Assemblies 4-13
H. Printed-Circuit Boards 4-20
I. Color X-Y Power Supply Assembly 4-35

Glossary of Terms GL-1

List of Illustrations

Figure 1-1	Game Overview	1-2
Figure 1-2	Switch Locations	1-4
Figure 3-1	Fluorescent Tube and Speaker	3-2
Figure 3-2	Amplifone Video Display	3-4
Figure 3-3	Wells-Gardner Video Display	3-6
Figure 3-4	Opening the Control Panel	3-8
Figure 3-5	Control Panel	3-9
Figure 3-6	Midi Trak-Ball™	3-10
Figure 3-7	Game and Regulator/Audio II Printed-Circuit Boards	3-12
Figure 3-8	Power Supply Fuses	3-14

Illustrated Parts Lists

Figure 4-1	Cabinet-Mounted Assemblies	4-2
Figure 4-2	Fluorescent Tube and Speaker Assembly	4-4
Figure 4-3	Amplifone Video Display Assembly	4-6
Figure 4-4	Wells-Gardner Video Display Assembly	4-8
Figure 4-5	Control Panel Assembly	4-9
Figure 4-6	Midi Trak-Ball™ Assembly	4-10
Figure 4-7	Utility Panel Assembly	4-12
Figure 4-8	Vertically Mounted Coin Door Assembly	4-13
Figure 4-9	American-Made Coin Door Assembly	4-16
Figure 4-10	EMI Cage Assembly and PCB Mounting Hardware	4-20
Figure 4-11	EMI Shield PCB Assembly	4-22
Figure 4-12	Quantum Game Printed-Circuit Board Assembly	4-24
Figure 4-13	Regulator/Audio II Printed-Circuit Board Assembly	4-32
Figure 4-14	Color X-Y Power Supply Assembly	4-35

List of Tables

Table 1-1	Switch Settings for Price Options	1-5
Table 1-2	Quantum Scoring	1-7

NOTICE

This equipment generates, uses, and can radiate radio frequency energy and if not installed and used in accordance with the instruction manual, may cause interference to radio communications. It has been tested and found to comply with the limits for a Class A computing device pursuant to Subpart J of Part 15 of FCC Rules, which are designed to provide reasonable protection against such interference when operated in a commercial environment. Operation of this equipment in a residential area is likely to cause interference in which case the user, at his own expense, will be required to take whatever measures may be required to correct the interference.

Set-Up Procedures

How to Use this Manual

This manual, written for game operators and service technicians, describes the Quantum game. The manual contains information about the *Upright* cabinet.

Chapter 1 describes new features, game setup, settings of option switches, and game play.

Chapter 2 contains self-test procedures.

Chapter 3 has maintenance and repair information.

Chapter 4 contains illustrated parts lists.

Figures 1-1 and 4-1 illustrate the game cabinet. Italicized lettering on these figures refers you to other places in the manual for information about specific cabinet parts.

In addition, schematic diagrams of the game circuitry are included with this manual.

Chapter 1

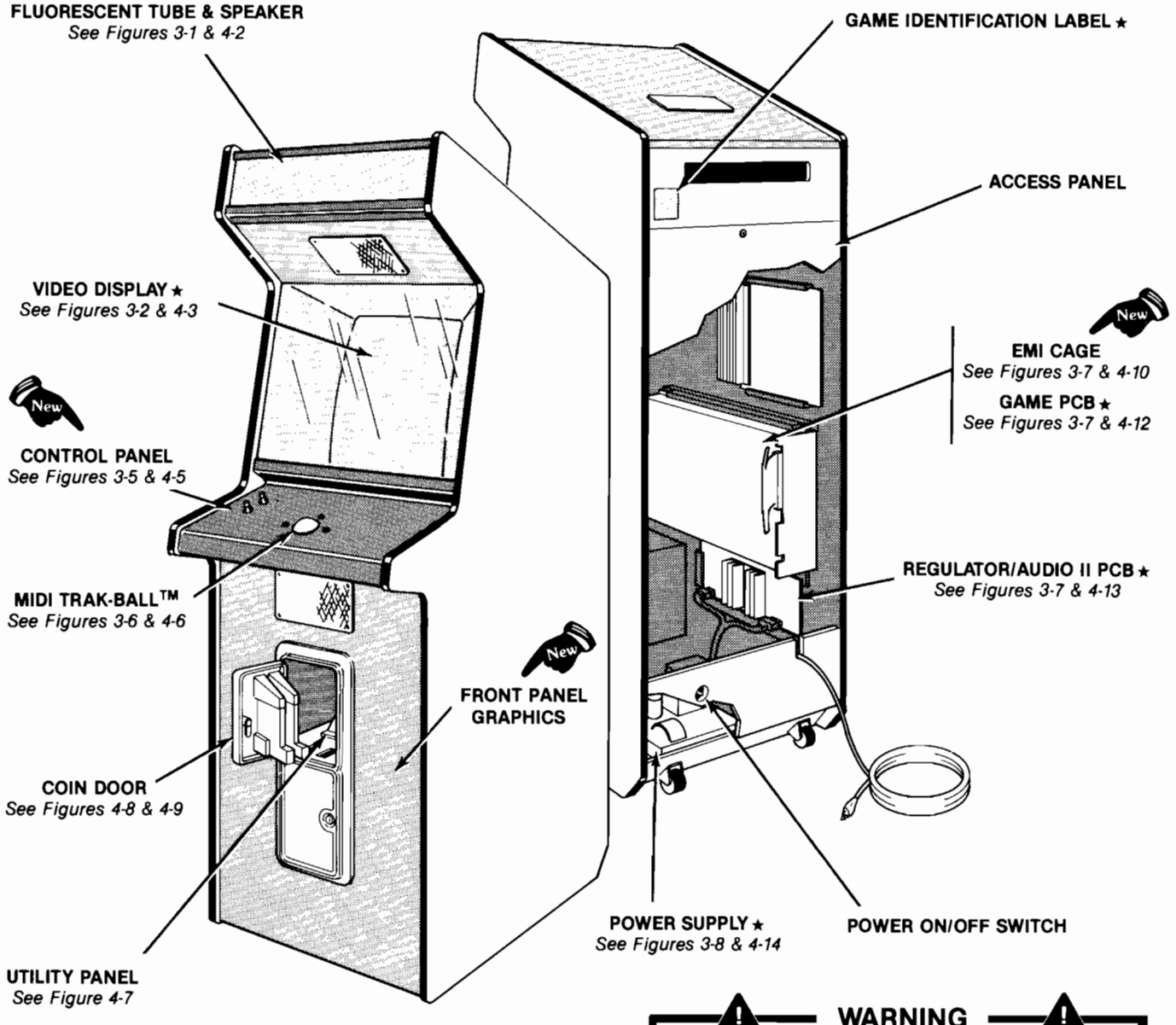

NOTE

Your game is equipped with either a Wells-Gardner or an Amplifone 19-inch video display.

If your game has an Amplifone display, serial numbers are located on the video display, High-Voltage PCB, and Deflection PCB, in addition to the locations shown here.

WARNING

SHOCK HAZARD

Do not plug in the game until it has been inspected. This game should only be connected to a grounded 3-wire outlet. If you have only a 2-wire outlet, we recommend you hire a licensed electrician to install a grounded outlet. *Players may receive an electrical shock* if this game is not properly grounded!

★ *Item with a serial number label*

Figure 1-1 Game Overview

A. New Features

The Quantum game has three new features. Even if you are familiar with ATARI® games, you should note these important differences:

- **Control Panel.** The control panel is designed to allow a player greater range of movement when using the Midi Trak-Ball.™
- **Front Panel Graphics.** Graphics are added to the front panel to attract more players.
- **Electromagnetic Interference (EMI) Cage.** The game printed-circuit board (PCB) is mounted inside this cage. The EMI cage reduces interference from the game to television and radio receivers.

New features and all other major parts of the game are illustrated in Figure 1-1. Throughout this manual, wherever one of these new features is mentioned, you will see this symbol: 

B. Inspecting the Game

Please inspect your game carefully to ensure that it was delivered to you in good condition.

WARNING

SHOCK HAZARD

To avoid electrical shock, **do not plug in the game** until the procedures in Sections B and C have been completed!

Do not touch internal parts of the display with your hands or with metal objects held in your hands!

1. Examine the exterior of the game cabinet for dents, chips, or broken parts.
2. Remove the screws from the rear access panel. Unlock and open this panel and the coin door; inspect the interior of the game as follows:
   a. Ensure that all plug-in connectors (on the game harnesses) are firmly plugged in. Replug any connectors found unplugged. **Do not force connectors together.** The connectors are keyed so they only fit in the proper orientation. **A reversed edge connector may damage a PCB** and will void your warranty.
   b. Ensure that all plug-in integrated circuits on the PCB are firmly plugged into their sockets.
   c. Remove the tie-wrap that secures the coiled power cord inside the cabinet. Inspect the power cord for any cuts or dents in the insulation. Repair or replace it as required. Place the square black plastic strain-relief plate in the wood slot at the bottom of the rear panel opening.
   d. Note the game serial number. It is printed on a label on the back of the cabinet. Verify that the same serial number is also on the game PCB, Regulator/Audio II PCB, power supply, and video display. See *Figure 1-1* for locations of the serial-numbered components. Please mention this serial number whenever you call your distributor for service.
   e. Inspect major subassemblies, such as the power supply, control panel, and video display. Make sure they are mounted securely, and that the green ground wires are connected.

C. Space and Power Requirements

WARNING

SHOCK HAZARD

This game should only be connected to a grounded 3-wire outlet. If you have only a 2-wire outlet, we recommend you hire a licensed electrician to install a grounded outlet. *Players may receive an electrical shock* if this game is not properly grounded!

1. Installation Requirements

Power	250 W
Temperature	0° to +38°C (+32° to +100°F)
Humidity	Not over 95% relative
Space Required	64 x 80 cm (25½ x 31½ in.)
Game Height	184 cm (72½ in.)

2. Selecting the Voltage Plug

The power supply used in this game operates on the line voltage of almost any country in the world. The power supply comes with either one, two, or three separate voltage-selection plugs. Plug voltages and wire colors are 100 VAC (violet wire color), 120 VAC (yellow wire color), 220 VAC (blue wire color), and 240 VAC (brown wire color).

Before plugging in your game, check your line voltage. Next, check the wire color on the voltage-selection plug that is plugged into the game's power supply. Make sure the voltage-selection plug is correct for the voltage of your location (see *Figure 4-14).*

Now plug the game into a grounded 3-wire outlet.

D. Switch Locations

1. Power On/Off Switch

The power on/off switch is located on the back of the cabinet on the lower left side (see *Figure 1-2).*

2. Utility Panel Switches

The volume control, self-test switch, coin counter(s), and auxiliary coin switch are on the utility panel. The utility panel is located inside the upper coin door (see *Figure 1-2.)* The volume control adjusts the level of sound produced by the game. The self-test switch is used to enter and exit the Self-Test Mode. The coin counter(s) records the number of coins entered into the game. The auxiliary coin switch is used to credit the game without activating a coin counter.

3. Option Switches

Game price option switches are located on the game PCB at location 4C/D (see *Figure 1-2).*

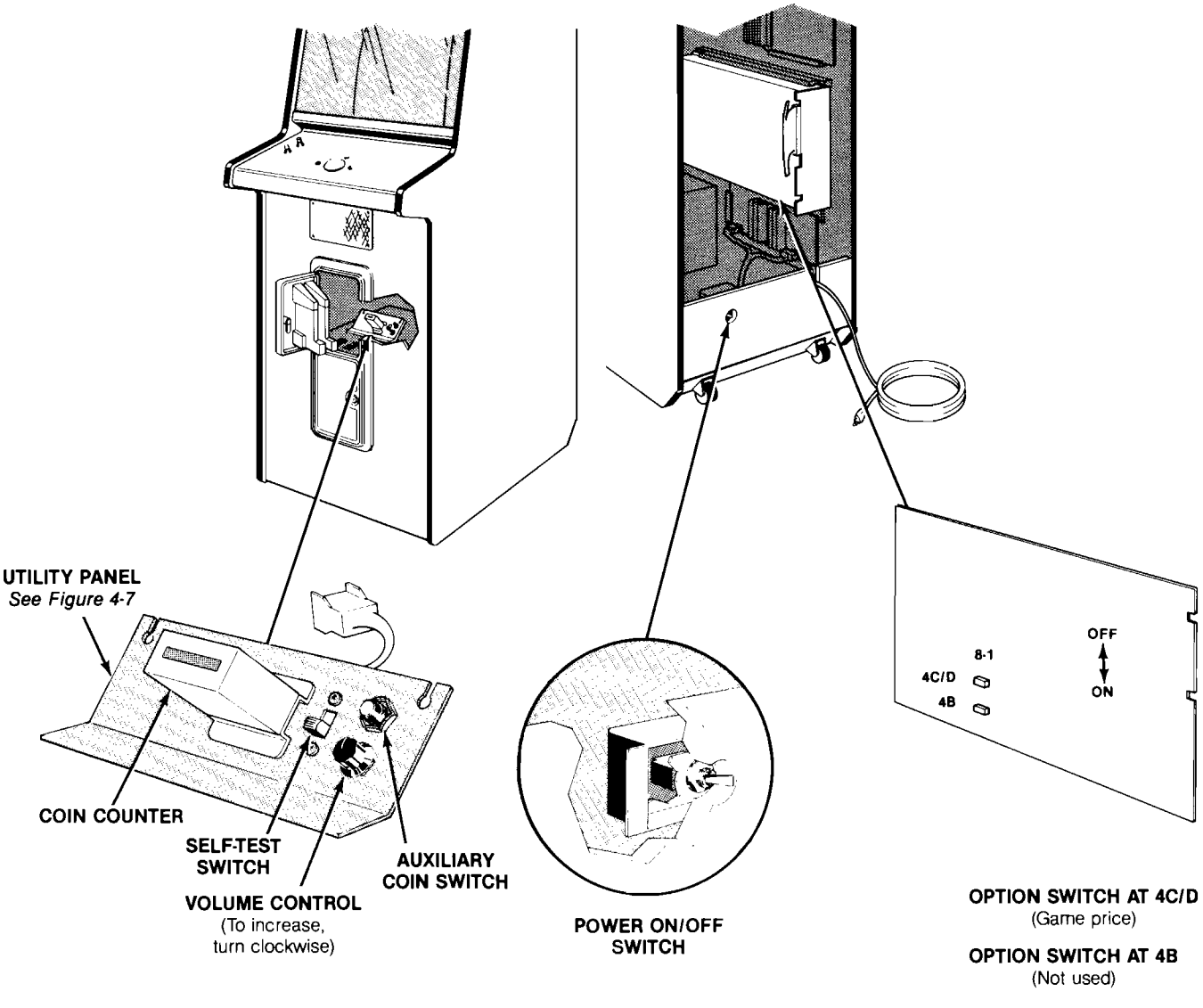

Figure 1-2 Switch Locations

E. Setting the Option Switches

Please see *CO-221-01*, supplement to TM-221, for information on this section.

F. Game Play

Quantum is a one- or two-player game with a color X-Y video display. The game action takes place in a subatomic world. The player tries to capture deadly atomic particles without being destroyed by them.

To capture particles, the player uses the Midi Trak-Ball™ to control a comet that sparkles. When the player rotates the Midi Trak-Ball™, the comet leaves a tail (or line) behind it. The player must draw a complete circle around the deadly particle to destroy it.

Quantum has five possible modes of operation: Attract, Select, Play, High-Score, and Self-Test. Self-Test is a special mode for checking the game switches and computer functions. You may enter the Self-Test Mode from any other mode.

1. Attract Mode

The Attract Mode begins when you turn the power on/off switch *on*, or after a Play, High-Score, or Self-Test Mode.

The Attract Mode consists of a series of five screens. In the first screen the word *QUANTUM* appears in the center of the screen and increases in size. Credits (if any) appear at the bottom of the screen.

The second screen instructs the player how to play the game.



The third screen gives the player a chance to actually play the game without inserting a coin! The screen displays *TRY CAPTURING THIS ATOM* and *MOVE THE TRAKBALL.*

The fourth screen displays the day's top score and the high-score table.

The fifth screen displays the word *QUANTUM*, the highest score, and previous game score(s) at the top of the screen. A simulated game is in the center of the screen. If the game has no credits, the words *INSERT COINS* appear. If the game has credit(s), a message instructs a player to press the appropriate start button. The Atari copyright message, number of lives, credits, and level of game play appear at the bottom of the screen.

When enough credit(s) is inserted for a 1- or 2-player game, the appropriate 1- or 2-player LED flashes. When the player presses the flashing LED start button, the Select Mode begins.

2. Select Mode

This mode begins when an LED start button is pressed. The player has 30 seconds to select the starting level. He can start a game at an advanced level of play and receive bonus points for starting play at that level. The starting levels appear at the bottom of the screen. The player chooses the starting level by circling it, using the Midi Trak-Ball™.

3. Play Mode

The Play Mode begins when the Select Mode ends and ends when the player's last comet is destroyed. The player's score(s) and highest score are displayed at the top of the screen. The number of remaining comets and the level of play are displayed at the bottom of the screen.

In the first level of play, various particles appear on the screen. When a player captures a particle, it explodes and its point value appears on the screen. Some particles, such as electrons, change into positrons and are worth extra points if captured. If a player captures more than one particle at a time, he earns double points. The first level of play ends when the player captures all of the nuclei.

Game play becomes more difficult as the game progresses. Particles are closer together and move faster. More particles appear on the screen at one time. Nuclei may appear tied together by a rope-like bond. Players may capture one or both nuclei in a bond. The player's comet may cross over the bond until it changes to red. If the comet tries to cross over a red bond, the comet is destroyed.

During a later wave, pulsars appear. The pulsar travels toward the comet and pulses its arms in and out as it moves. The player's comet is destroyed if it comes in contact with any part of the pulsar. Splitters also appear in a later wave. A splitter multiplies if it is not destroyed.

The comet is destroyed when it hits a particle or the red bond between nuclei. The game ends when all of the player's comets are destroyed.

Table 1-2 lists Quantum particles and their point values.

4. High-Score Mode

The High-Score Mode begins when a player has earned one of the eleven highest scores.



If a player has earned the highest score, a special option allows him to sign his name using the Midi Trak-Ball™, as well as enter his initials into the high-score table.

Characters of the alphabet appear on the screen. The player rotates the Midi Trak-Ball™ to locate his initial. He circles his initials and they appear in the center of the screen. Then the initials and score are transfered into the high-score table.

To reset the high-score table, refer to Chapter 2.

5. Hints for Game Play

- Circle two or more objects for double points.
- Capture all the nuclei to advance to the next wave.
- Move the Midi Trak-Ball™ quickly to keep the comet's tail from disintegrating and to produce a longer tail.
- Avoid deadly red bonds between nuclei.

Table 1-2 Quantum Scoring

Particle		Description	Points
Electron	•	Rotates slowly around Nucleus.	20
Triphon		Moves slowly and flashes colors. Leaves Tryd in its trail.	100
Splitter		Travels in a random pattern. Flashes color, splits into 3, and splits into 3 again.	100
Photon		Enters from the edge of the screen, spins across the screen, and exits from the other side.	200
Positron	+	Made of stray electrons after a nucleus explodes. Moves to the edge of the screen rapidly.	200
Tryd		Slowly shrinks away and disappears.	300
Nucleus		Moves slowly and bounces off screen edge. Cuts off the end of a comet's tail when the nucleus crosses over tail.	300
Pulsar	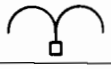	Pulses as it travels toward comet.	400

Self-Test Procedure

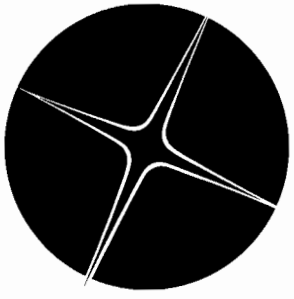

This game will test itself and provide data to show that the game's circuitry and controls are operating properly. The data is provided on the video display and speaker. No additional equipment is necessary.

We suggest you perform the self-test procedure when you first set up the game, any time you collect money from the game, when you change game options, or when you suspect game failure.



Chapter 2

A. Comments on Troubleshooting

When troubleshooting, first determine the symptom(s) of the failure. After determining the symptom, look over the wiring diagram and determine what assemblies could cause the failure. Could it be caused by the power supply, Regulator/Audio II printed-circuit board (PCB), or the video display?

The next step is to check all harness wires and connectors to the suspected assembly. If you do not find a harness or connector problem, substitute an assembly known to be good for the suspected failing assembly. If the game functions properly, you have successfully isolated the failure. If it doesn't, repeat the procedure with another assembly.

When you have isolated the failing assembly, you must troubleshoot that assembly and make the necessary repairs. If the video display fails, we suggest that a qualified video-display technician handle the troubleshooting and repair.

Be sure to refer to *The Book—A Guide to Electronic Game Operation and Servicing*, published by Atari, Inc., whenever you need help with the techniques, tools, and terminology associated with coin-operated electronic games.

To effectively troubleshoot a game PCB, learn as much as you can about the PCB. The diagrams in the *Schematic Package* (included with the game) show the functions of the circuitry. Again, while troubleshooting a PCB, first determine the symptom of the failure, then locate the suspected area on the schematic diagram.

B. Performing the Self-Test

Please see *CO-221-01*, supplement to TM-221, for information on this section.

Please see *CO-221-01,* supplement to TM-221, for information on this section.

Please see *CO-221-01,* supplement to TM-221, for information on this section.

Please see *CO-221-01*, supplement to TM-221, for information on this section.

Please see *CO-221-01*, supplement to TM-221, for information on this section.

Maintenance and Repair

This chapter details maintenance and repair information. Step-by step procedures show you how to disassemble, repair, or replace major assemblies in the game. For parts information, refer to Chapter 4.

Chapter 3

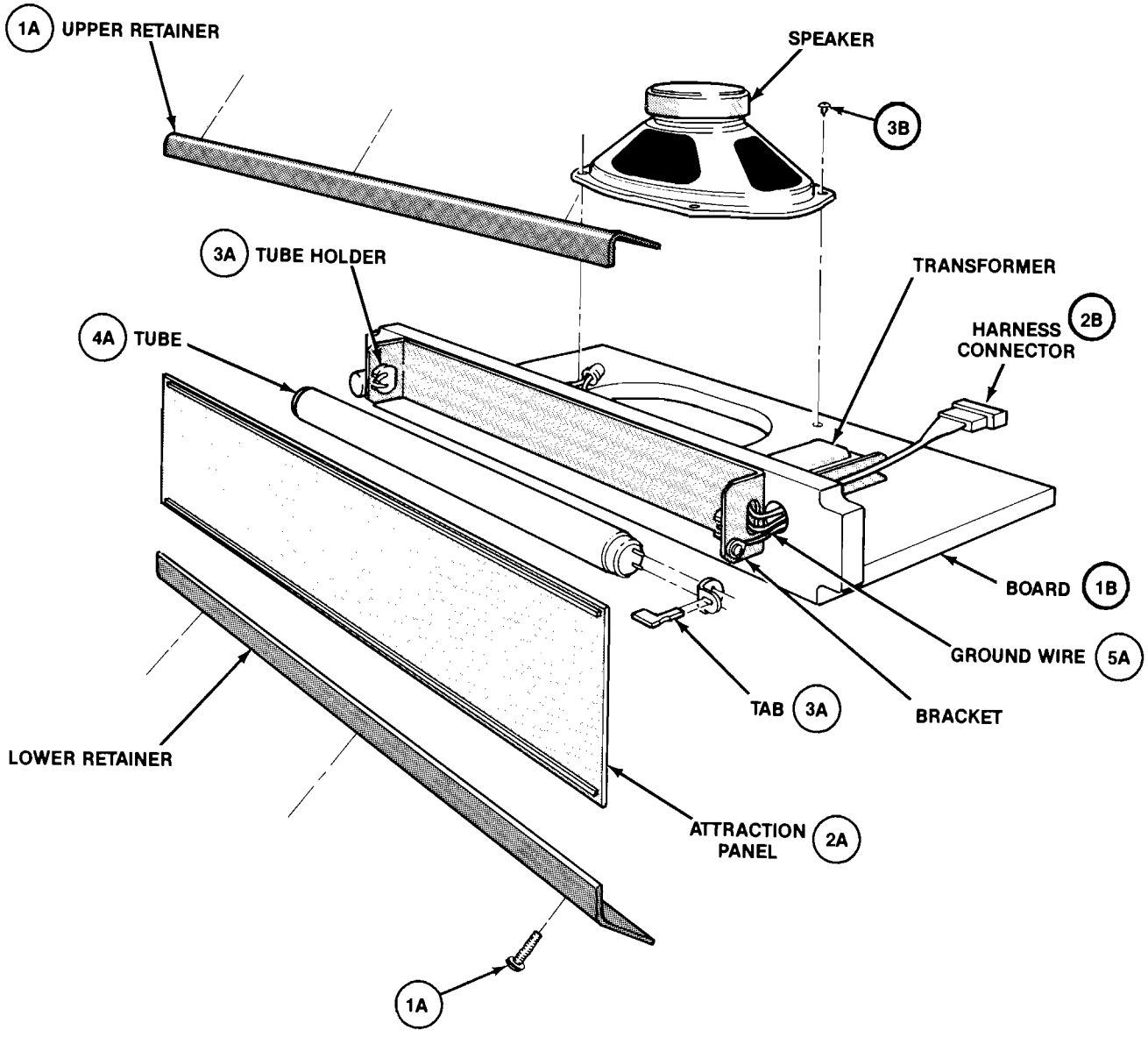

Figure 3-1 Fluorescent Tube and Speaker

A. Replacing the Fluorescent Tube

WARNING

Before removing or repairing the fluorescent tube or speaker, **turn the game off.**

If you drop a fluorescent tube and it breaks, *it will implode!* Shattered glass can fly six feet or more from the implosion. Use care when replacing any fluorescent tube.

1A. Remove the three sets of hardware that secure the upper attraction-panel retainer to the cabinet (see *Figure 3-1).* Loosen the three sets of hardware that secure the lower retainer to the cabinet.

2A. Lift the attraction panel out of its lower retainer.

3A. Remove the cardboard locking tab at each end of the tube. Slightly rotate the tube up or down and carefully remove it from the tube holders.

4A. Replace with a new tube. Do not snap the tube in vigorously—*you may break it, causing an implosion!* Replace the locking tabs.

5A. Check that the green ground wire is securely attached to the large metal bracket and the ballast transformer on the board. If the tube is not grounded, it may not start. Reassemble in reverse order.

B. Replacing the Speakers

1B. **Upper speaker (located above the video display).** Follow steps 1A and 2A for replacing the fluorescent tube (see *Figure 3-1).* Remove the hardware that secures the tube and speaker board to the cabinet.

2B. Slide the tube and speaker board partially out of the cabinet. Turn it sideways to unplug the 5-pin harness connector. Remove the board from the cabinet.

3B. Unplug the two plug-in connectors on the speaker. (Note that the white wire (+) connects on the side marked with a painted dot.) Remove the hardware that attaches the speaker to the board. Replace the speaker and reinstall the tube and speaker board in reverse order.

4B. **Lower speaker (located below the control panel—not shown).** Open the rear access panel. Unplug the two plug-in connectors on the speaker. (Note that the white wire (+) connects on the side marked with a painted dot.) Remove the hardware that attaches the speaker to the cabinet. Replace the speaker and reassemble in reverse order.

C. Video Displays and Display Printed-Circuit Boards

NOTE

Amplifone CRT (A201001-01) and Deflection PCB (A201014-01) are shipped as a matched, calibrated pair and should be used as such.

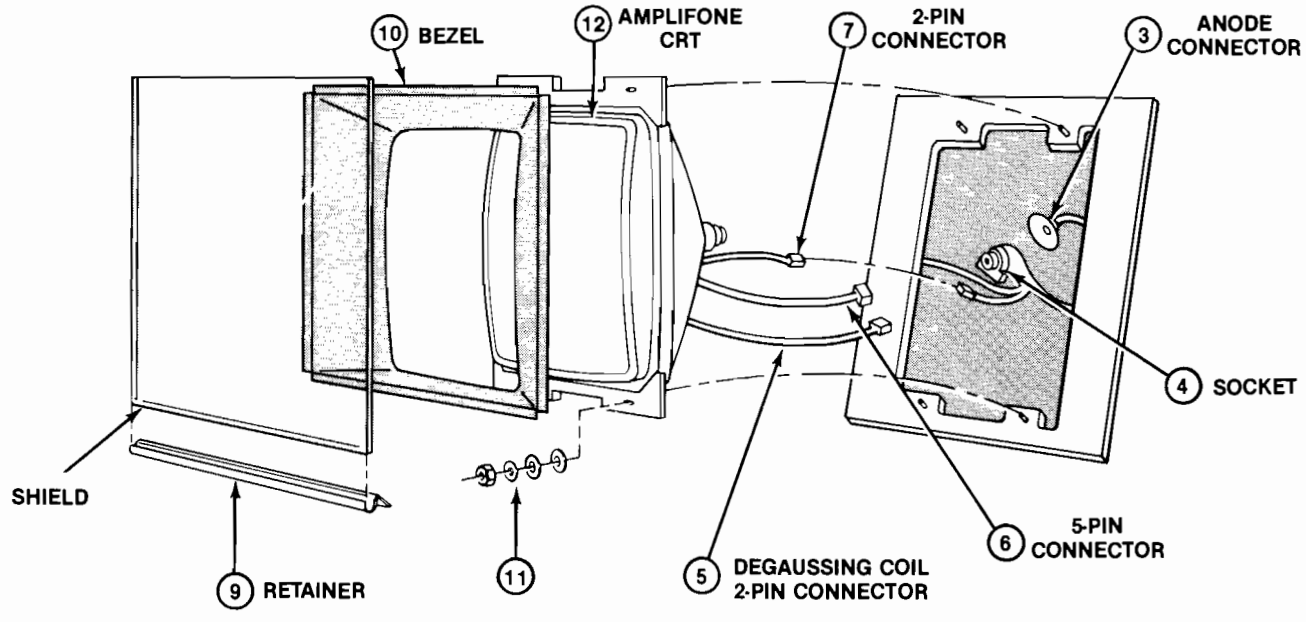

Figure 3-2A Amplifone Video Display CRT Removal

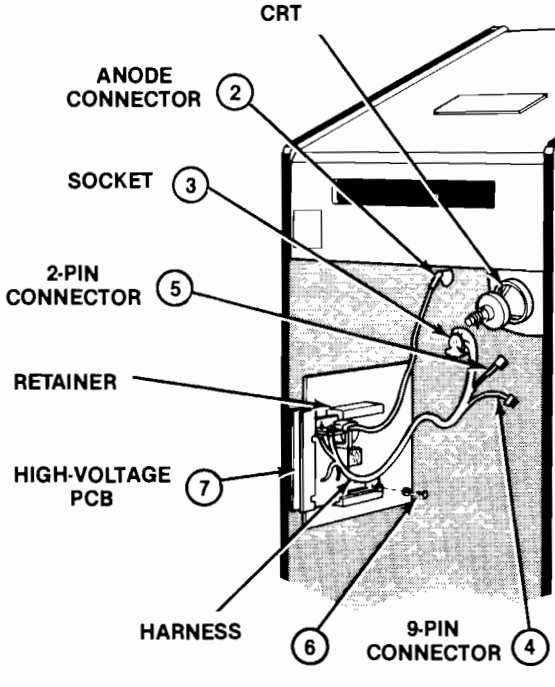

Figure 3-2B Amplifone Video Display High-Voltage PCB Removal

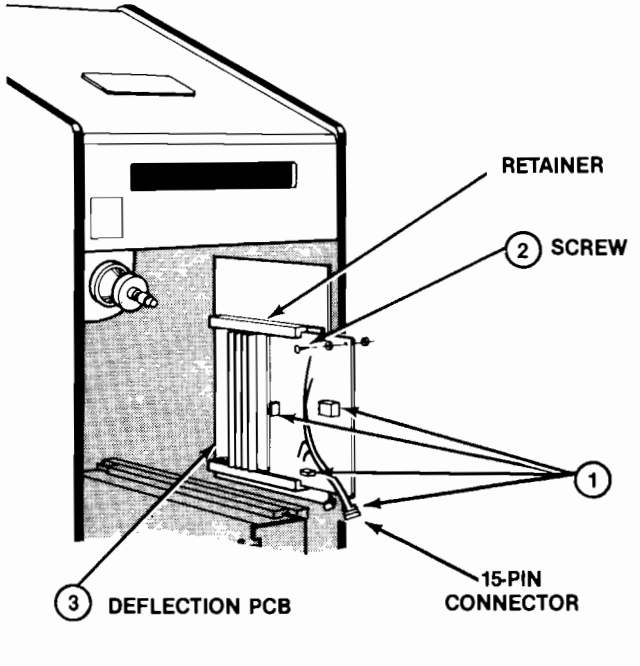

Figure 3-2C Amplifone Video Display Deflection PCB Removal

WARNING

SHOCK HAZARD

The following procedure should only be performed by a *qualified service technician.* Before removing or repairing the video display, **unplug the game.**

High voltages may exist in any video display, even with power disconnected. Use extreme caution and do not touch electrical parts of the display yoke area with your hands or with metal objects in your hands!

Discharge the high-voltage from the cathode ray tube as follows: Attach one end of a large, well-insulated, 20-kV jumper to ground. Momentarily touch the free end of the grounded jumper to the anode by sliding it under the anode cap. Wait two minutes and discharge the anode again.

IMPLOSION HAZARD

If you drop the display and the picture tube breaks, *it will implode!* Shattered glass and the yoke can fly six feet or more from the implosion. Use care when replacing any display.

Your game has either an Amplifone or a Wells-Gardner 19-Inch Color X-Y cathode ray tube (CRT). Use the following procedures to remove and reinstall your CRT. Refer to Figures 4-3 and 4-4 for parts information.

The **Amplifone Color X-Y Display** consists of the following three assemblies:

- 19-inch Amplifone cathode-ray tube (CRT)
- Deflection printed-circuit board (PCB) calibrated to match the CRT
- High-Voltage PCB (To adjust FOCUS and BRIGHTNESS, refer to TM-194, the Amplifone 19-Inch Color X-Y Display manual.)

Removing the Amplifone CRT:

1. Open the rear access panel. Disconnect the 15-pin harness connector wired to the Deflection PCB (see *Figure 3-2C).*
2. Discharge the high-voltage from the CRT (refer to the preceding **WARNING** for this procedure).
3. *Carefully* disconnect the high-voltage anode connector from the CRT (see *Figure 3-2A).*
4. Unplug the socket from the rear of the CRT.
5. Unplug the degaussing coil 2-pin connector from the Deflection PCB.
6. Unplug the 5-pin connector from the Deflection PCB.
7. Unplug the 2-pin connector to the DAG spring that goes across the back of the CRT.
8. From the front of the game, open the control panel (see *Figure 3-4).*
9. Securely grasp the metal retainer that supports the display shield (see *Figure 3-2A).* Remove the retainer and shield by sliding them down and out of the cabinet.
10. Remove the cardboard bezel.
11. Remove the four sets of hardware that secure the CRT to the wood frame.
12. *Carefully* remove the CRT out through the front of the cabinet. Place it on a soft mat in a protected location.
13. To install an Amplifone CRT, reverse the order of this procedure.

Removing the Amplifone High-Voltage PCB:

1. Discharge the high-voltage from the CRT (refer to the preceding **WARNING** for this procedure).
2. *Carefully* disconnect the high-voltage anode connector from the CRT (see *Figure 3-2B).*
3. Unplug the socket from the rear of the CRT.
4. Unplug 9-pin connector P109 from the Deflection PCB.
5. Unplug the 2-pin connector from the DAG spring.
6. Remove the hardware that secures the High-Voltage PCB and two harnesses to the game cabinet.
7. Slide the High-Voltage PCB from the wood retainers.
8. To install a High-Voltage PCB, reverse the order of this procedure.

Removing the Amplifone Deflection PCB:

1. Unplug the four connectors from the Deflection PCB (see *Figure 3-2C).*
2. Remove the hardware that secures the Deflection PCB to the game cabinet.
3. Slide the Deflection PCB from the wood retainers.
4. To install the Deflection PCB, reverse the order of this procedure.

Wells-Gardner Video Display:

WARNING

SHOCK HAZARD

The following procedure should only be performed by a *qualified service technician.* Before removing or repairing the video display, **unplug the game**.

High voltages may exist in any video display, even with power disconnected. Use extreme caution and do not touch electrical parts of the display yoke area with your hands or with metal objects in your hands!

Discharge the high voltage from the cathode-ray tube as follows: Attach one end of a large, well-insulated, 20-kV jumper to ground. Momentarily touch the free end of the grounded jumper to the anode by sliding it under the anode cap. Wait two minutes and discharge the anode again.

IMPLOSION HAZARD

If you drop the display and the picture tube breaks, *it will implode!* Shattered glass and the yoke can fly six feet or more from the implosion. Use care when replacing any display.

Removing the Wells-Gardner Color X-Y Display:

1. Open the rear access panel and unplug the interconnect harness from the main harness. Remove the hardware that secures the display chassis to the metal bracket (see *Figure 3-3).*
2. Open the control panel (see *Figure 3-4).*
3. Securely grasp the metal retainer that supports the display shield. Remove the retainer and shield by sliding them out and down from the cabinet.
4. Remove the cardboard bezel.
5. Remove the four sets of hardware that secure the display chassis to the wood frame.
6. Carefully remove the video display through the front of the cabinet. Place it on a soft mat in a protected location.
7. To install the display, reverse the order of this procedure.

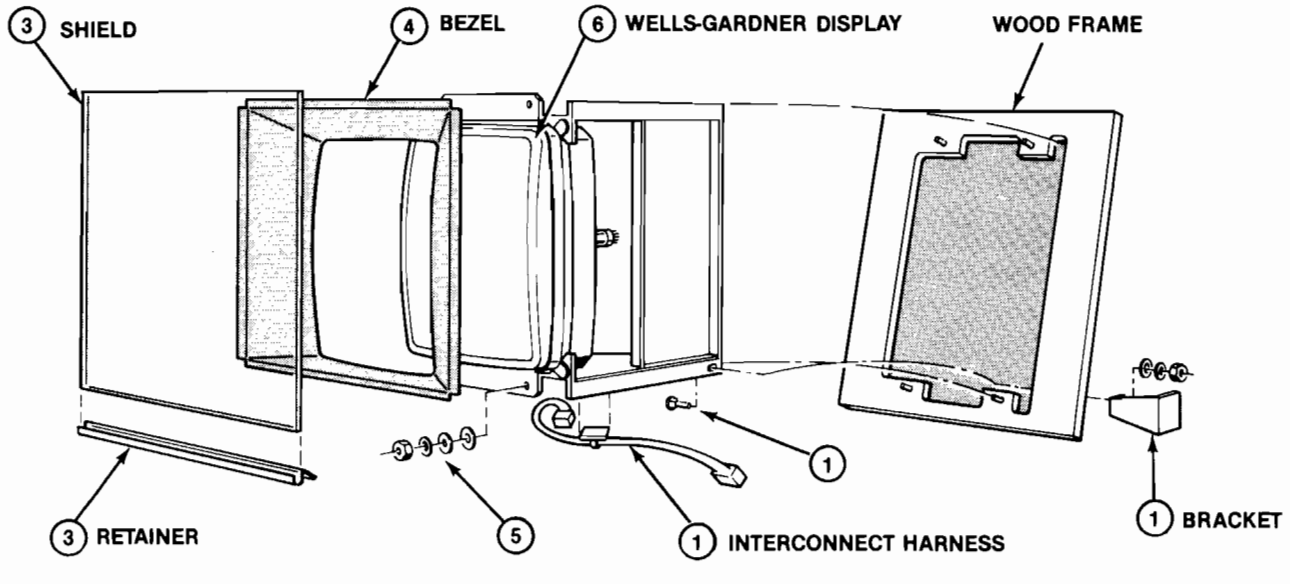

Figure 3-3 Wells-Gardner Video Display

D. Control Panel

Opening the Control Panel:

1. Unlock and open the coin door (see *Figure 3-4).*
2. Reach up through the opening to the sides of the control panel and release the spring-drawn latches.
3. Lift the control panel at the top edge and tilt it toward you.
4. Make sure the foam tape on the lower edge of the display shield is in good condition. This tape prevents liquids from entering the interior of the cabinet.

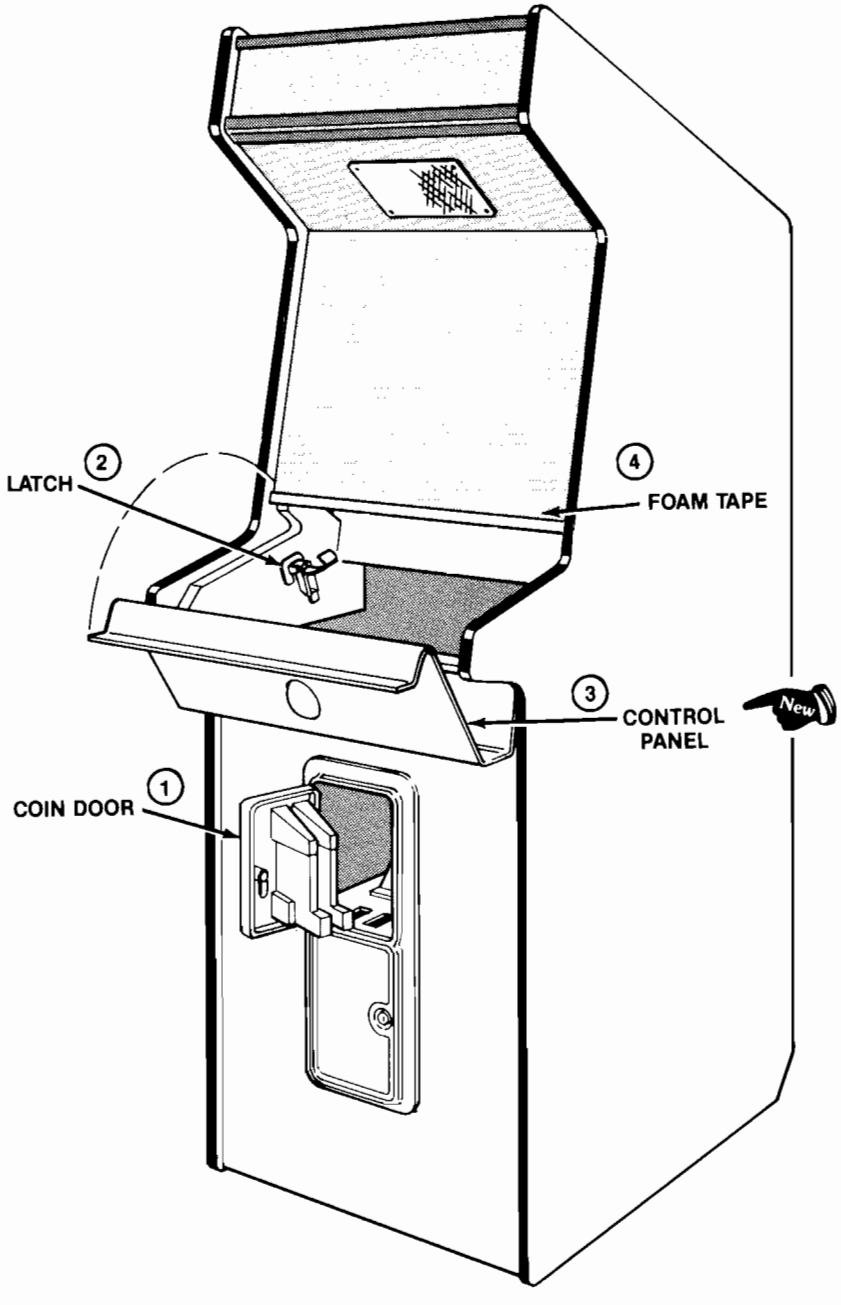

Figure 3-4 Opening the Control Panel

WARNING

Before you remove or repair any switch on the control panel, **turn the game *off*.**

Testing the LED Start Switch:*

These switches have a very low failure rate. If you suspect switch failure, test it using the following directions:

1. Disconnect the wires from the switch.
2. Zero an ohmmeter. Set the ohmmeter switch range at x10. Attach the leads of the ohmmeter to the normally open and common contacts (refer to *Figure 3-5).*
3. Check the contacts for closed and open continuity. Close the switch and the ohmmeter should read zero. Release the switch and the ohmmeter should read infinity.
4. If the contacts do not operate sharply or always remain closed or open, replace the switch.

**Not illustrated*

Replacing the LED Start Switch:

1. Disconnect the wires from the switch.
2. Turn the switch counterclockwise while holding the black cone-shaped switch bezel on the outside of the control panel (See *Figure 3-5*).
3. Install a new switch using the reverse procedure.
4. Reconnect the wires as shown in *Figure 3-5.*

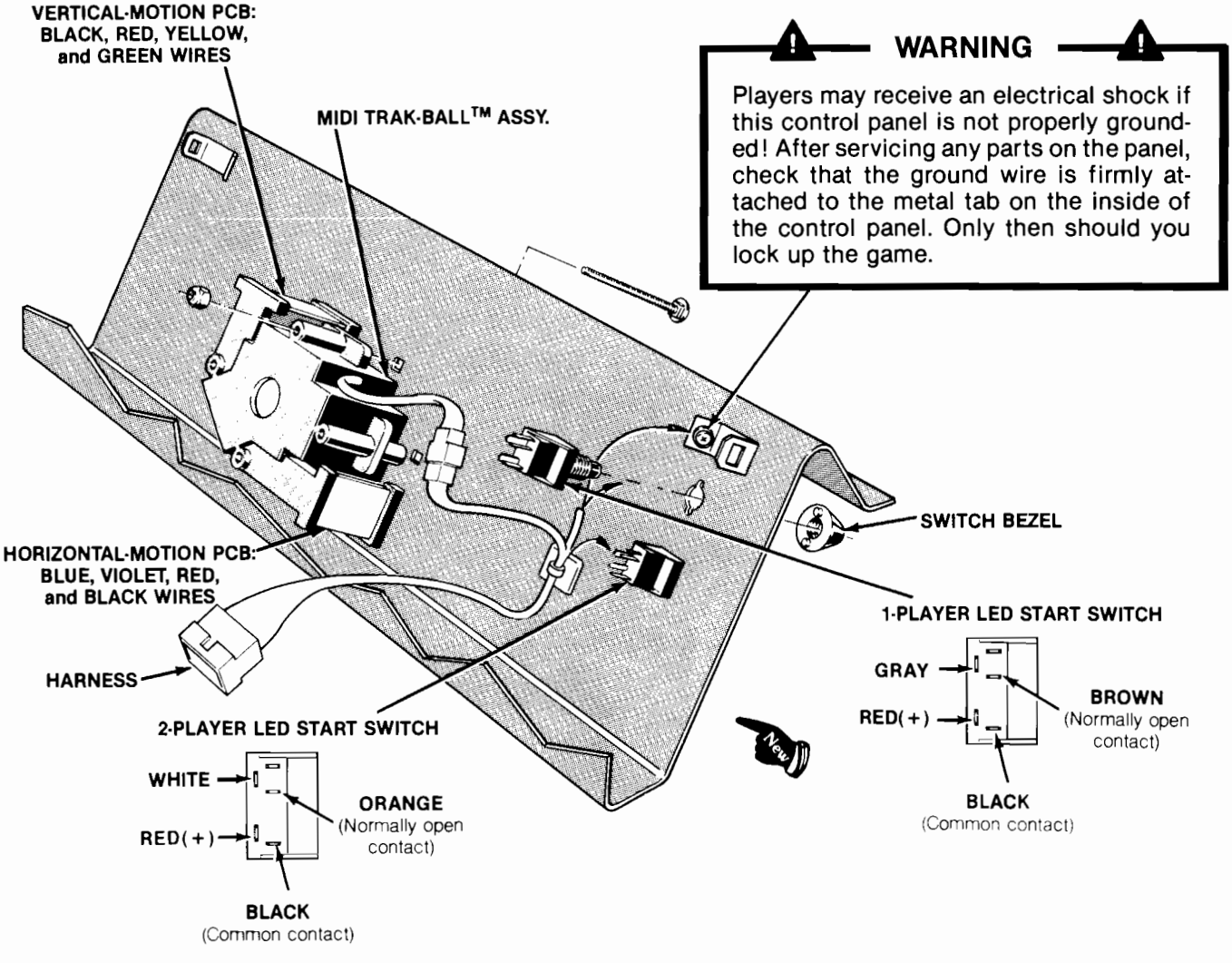

Figure 3-5 Control Panel

E. Midi Trak-Ball™

Circled numbers match numbered instructions. Disassemble in the order indicated.

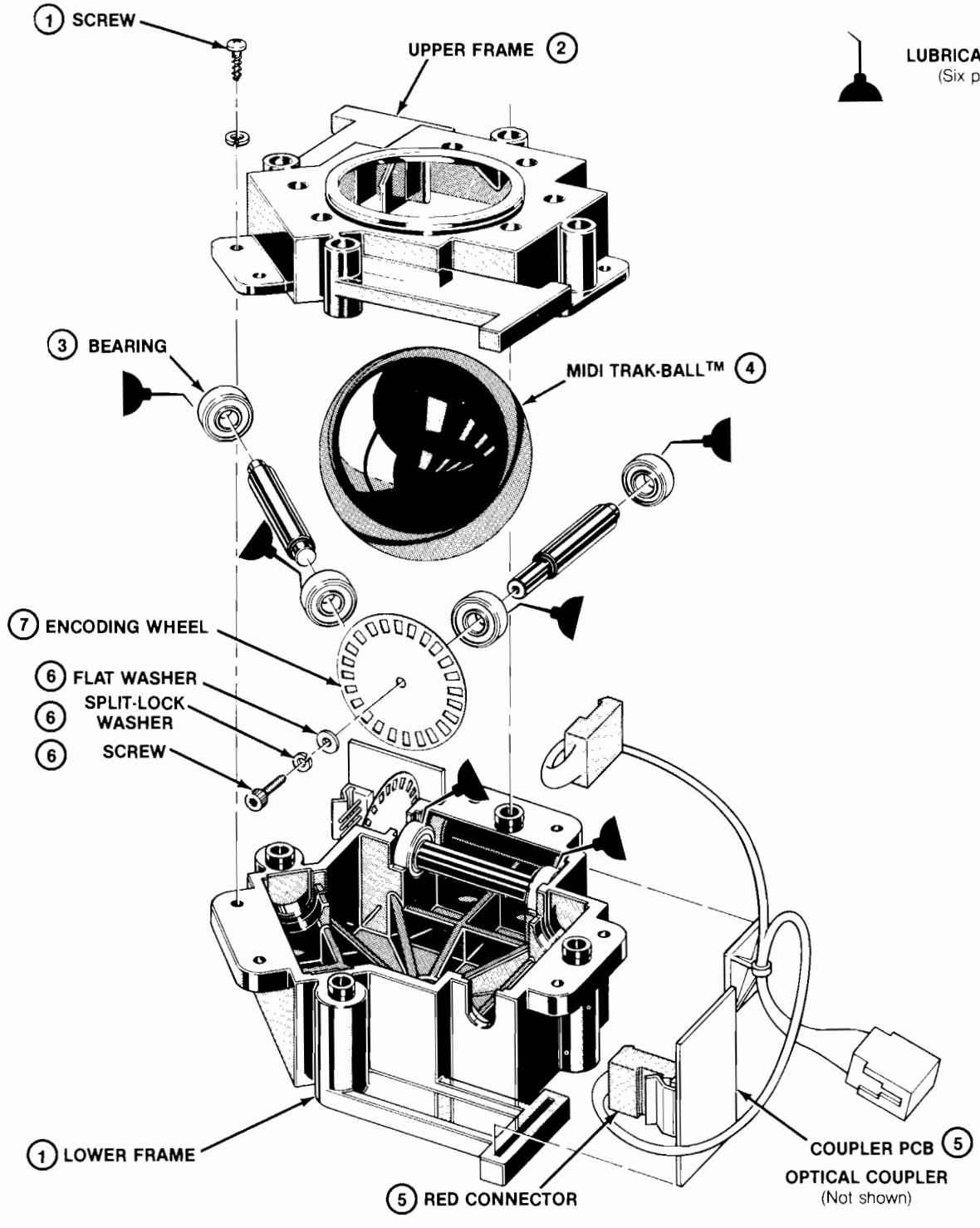

Figure 3-6 Midi Trak-Ball™

WARNING

Before removing or repairing the Midi Trak-Ball™, **turn the game *off*.**

Lubricating the Midi Trak-Ball™ Assembly:

1. Remove the entire Midi Trak-Ball™ assembly from the control panel (see *Figure 3-5*). Remove the six screws that secure the upper and lower frames together (see *Figure 3-6*).
2. Lift off the upper frame.
3. Lubricate each of the six ball bearings with two drops of a light-duty oil, such as 3-in-One oil. Lubricate the bearings approximately every three months or 6,000 credits (credits are counted on the coin counter).

Removing the Midi Trak-Ball™, Coupler PCB, and Encoding Wheel:

4. Perform steps 1 and 2. Remove the Midi Trak-Ball™.
5. Lift the Coupler PCB out of its slot. Carefully disconnect the red connector and remove the PCB.
6. Remove the screw, flat washer, and split-lock washer that secure the encoding wheel.
7. Remove the encoding wheel. Reassemble and reinstall in reverse order.

NOTE

When you replace the Coupler PCB, make sure that the metal encoding wheel is not bent or damaged. It should turn freely between the two halves of the optical coupler.

Adjusting the Midi Trak-Ball™ control:

8. When you tighten the encoding wheel, rotate the socket-head screw on the end of the roller shaft until a hole in the shaft is visible through the hole in the upper frame.
9. Insert a ⅛-inch diameter pin or screwdriver through the hole in the shaft.
10. Tighten the socket-head screw with an Allen wrench.

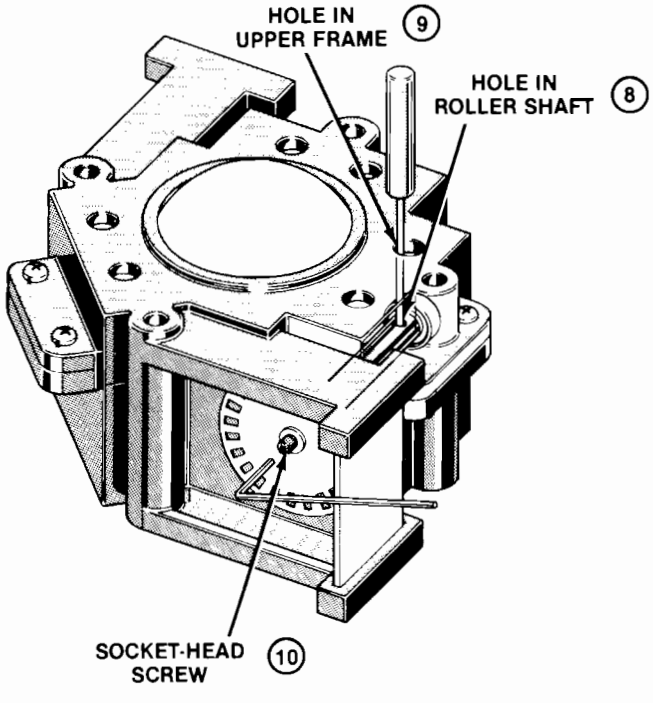

Figure 3-6 Midi Trak-Ball™, continued

F. Game and Regulator/Audio II Printed-Circuit Boards

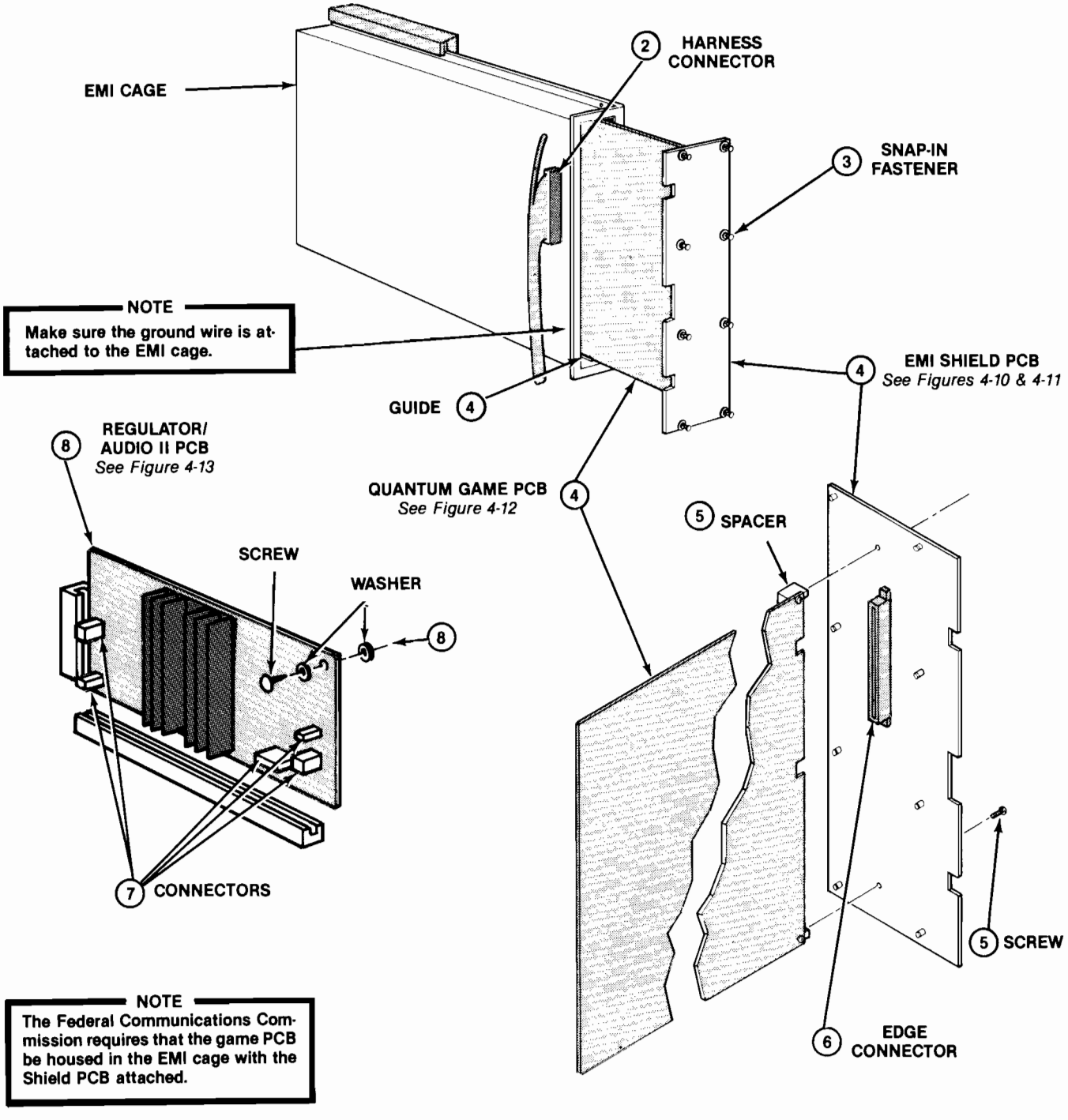

Figure 3-7 Game and Regulator/Audio II Printed-Circuit Boards

WARNING

Before you remove or repair any printed-circuit board, **turn the game *off.***

Removing the Game Printed-Circuit Board:

1. Open the rear access panel.
2. The game printed-circuit board (PCB) is located inside the electromagnetic interference (EMI) cage (see *Figure 3-7).* Unplug the harness connector on the EMI Shield PCB.
3. To remove the game PCB, pull the eight nylon snap-in fasteners on the EMI Shield PCB to the unlocked position.
4. Carefully slide the Shield PCB and the attached game PCB straight out of the guide. Be careful not to twist the boards, as this may loosen connections or components. Replace or repair as required. Reinstall the game and Shield PCBs in reverse order.

Removing the EMI Shield PCB from the Game PCB:

5. Remove the pan-head screws that connect the EMI Shield PCB to the spacers.
6. Push the EMI Shield PCB off the game PCB by applying pressure with your thumbs to the edge connector.

Removing the Regulator/Audio Printed-Circuit Board:

7. Disconnect the five small harness connectors on this board (see *Figure 3-7).*
8. Remove the hardware that secures the Regulator/Audio II PCB to the cabinet, and carefully remove the board from its retainers. Do not twist the board, as this may loosen connections or components. Replace or repair as required, and reinstall the PCB.

CAUTION

Make sure that the connectors on each PCB are properly plugged in. Note that they are keyed to fit only one way. If they do not slip on easily, do not force them. **A reversed connector may damage your game** and void the warranty.

9. Close and lock the rear access panel.
10. **Important:** Perform the self-test after repairing or replacing a printed-circuit board.

G. Power Supply Fuses

WARNING

Before replacing any fuse, **turn the game *off*.**

Fuse cover must be in place during game operation.

The power supply in this game contains six fuses. The fuse at location F1 protects the power supply. When you replace a fuse, use the identical type fuse with the same electrical rating (see *Figure 3-8).*

Refer to the color X-Y display manual for display fuse information.

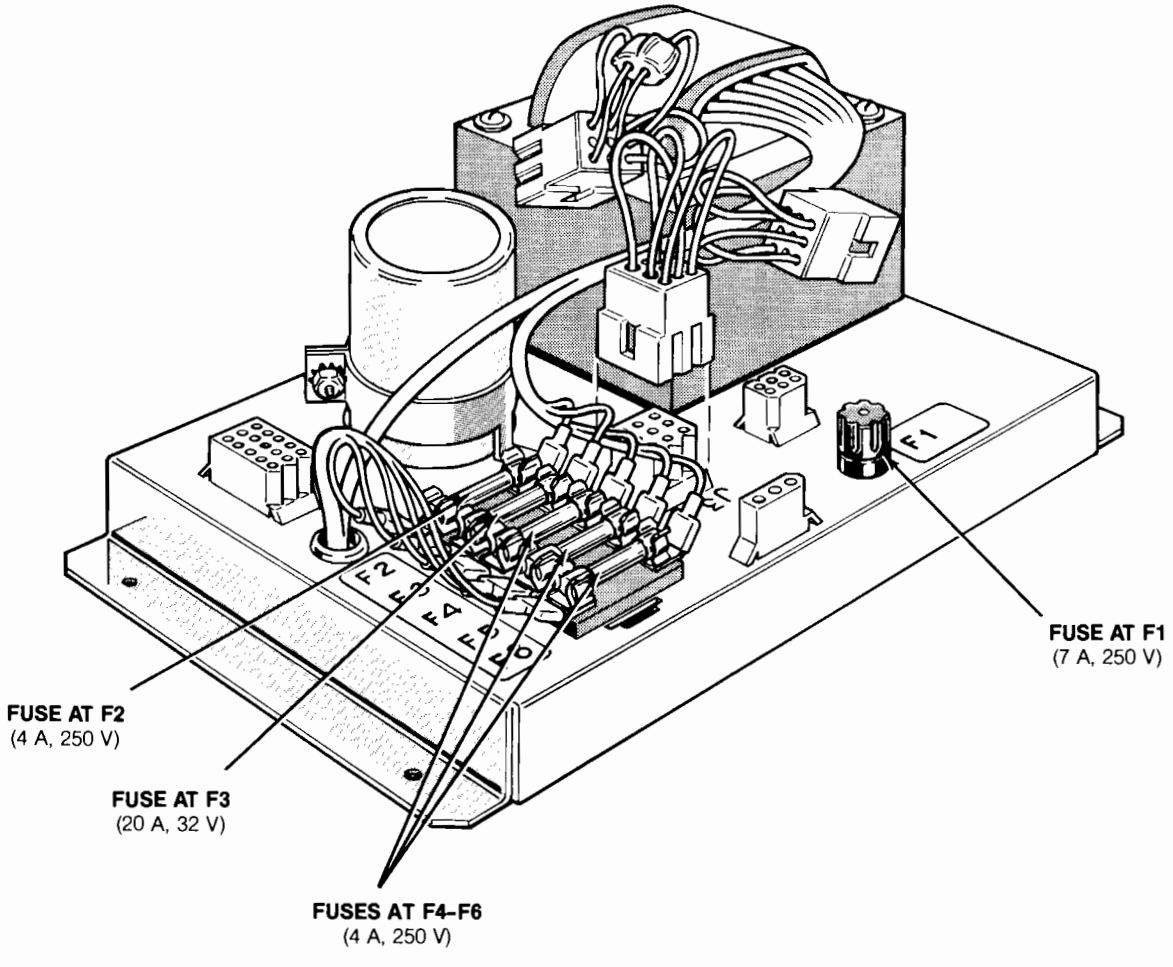

Fuse cover not shown.

Figure 3-8 Power Supply Fuses

Illustrated Parts Lists

This chapter provides information you need to order parts for your game. Common hardware (screws, nuts, washers, etc.) has been deleted from most of the parts lists. However, there is a parts list for the hardware needed to mount the game and Regulator/Audio II PCBs to the cabinet.

The PCB parts lists are arranged in alphabetical order by component. Each component subsection is arranged alphanumerically by reference designator.

Other parts lists are arranged alphanumerically by Atari part number. In these parts lists, all A-prefix numbers come first. Following these are numbers in sequence evaluated up to the hyphen, namely 00- through 99-, then 000598O- through approximately 201000-.

When ordering parts, please give the part number, part name, number of this manual, and serial number of your game. This will aid in filling your order rapidly and correctly. We hope the results will be less downtime and more profit from your game.

Atari Customer Service numbers are listed on the inside front cover of this manual.

Chapter 4

A. Cabinet-Mounted Assemblies

Manuals, Schematics, & Self-Test Label—
See parts list on following page

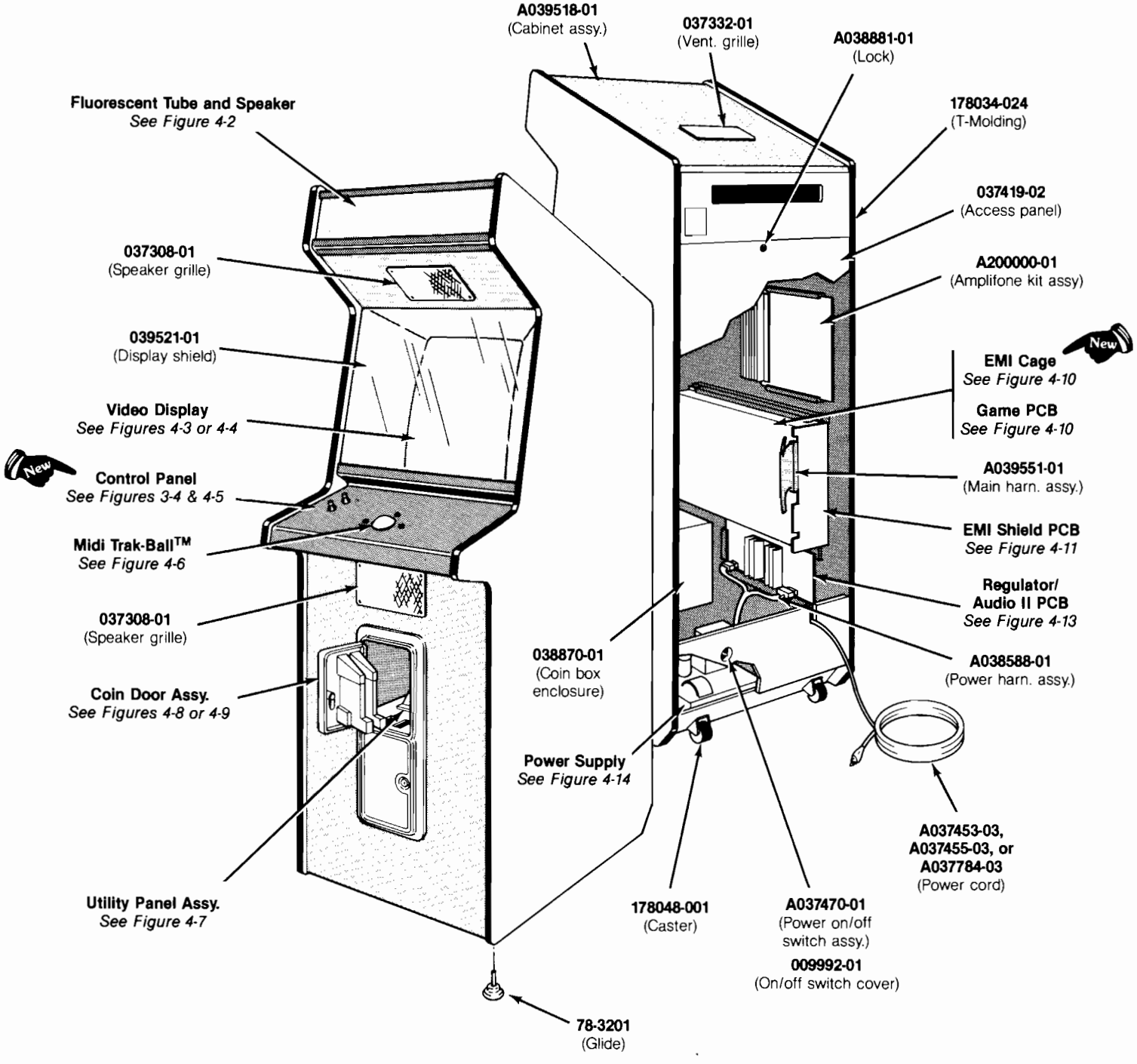

Figure 4-1 Cabinet-Mounted Assemblies
A039519-01 A

Cabinet-Mounted Assemblies
Parts List

Part No.	*Description*
A037453-03	Strain-Relief Power Cord *(U.S. and Canada)*
A037455-03	Strain-Relief Power Cord *(Australia and New Zealand)*
A037470-01	Power On/Off Switch Mounting Plate Assembly
A037701-02	Electromagnetic Interference (EMI) Cage Assembly
A037784-03	Strain-Relief Power Cord *(United Kingdom, Ireland, Lebanon, Saudi Arabia, India, Hong Kong, Singapore, Egypt, Nigeria, Republic of South Africa, Zimbabwe)*
A038588-01	Power Harness Assembly
A038881-01	Lock Assembly *(for rear access panel) Acceptable substitute is part no. A038881-03*
A039518-01	Cabinet Assembly *(includes glides and PCB retainers, but not the rear access panel)*
A039551-01	Main Harness Assembly
A039579-01	EMI Shield PCB Assembly
A200000-01	Amplifone 19-Inch Color X-Y Display Kit Assembly *Acceptable substitute is 19-Inch Wells-Gardner Display part no. A038590-01.*
	The following five items are the technical information supplements to this game:
CO-221-01	Supplement to TM-221
SP-221	Quantum Schematic Package
ST-221-01	Quantum Label with Self-Test Procedure and Option Switch Settings
TM-194	Service Manual for 19-Inch Amplifone Color X-Y Display *(use with part no. A200000-01) Acceptable substitute is TM-183, for use with part no. A038590-01*
TM-221	Quantum Operation, Maintenance, and Service Manual
78-3201	Adjustable Glide
009992-01	On/Off Switch Cover
037308-01	Speaker Grille
037332-01	Ventilation Grille
037419-02	Rear Access Panel *(does not include lock)*
038091-01	Molded Coin Box *(not shown)*
038870-01	Coin Box Enclosure
039521-01	Video Display Shield
178013-001	Spring Draw Latch *(not shown)*
178034-024	¾-Inch Black Plastic T-Molding
178048-001	2-Inch Rigid Caster

B. Fluorescent Tube and Speaker Assembly

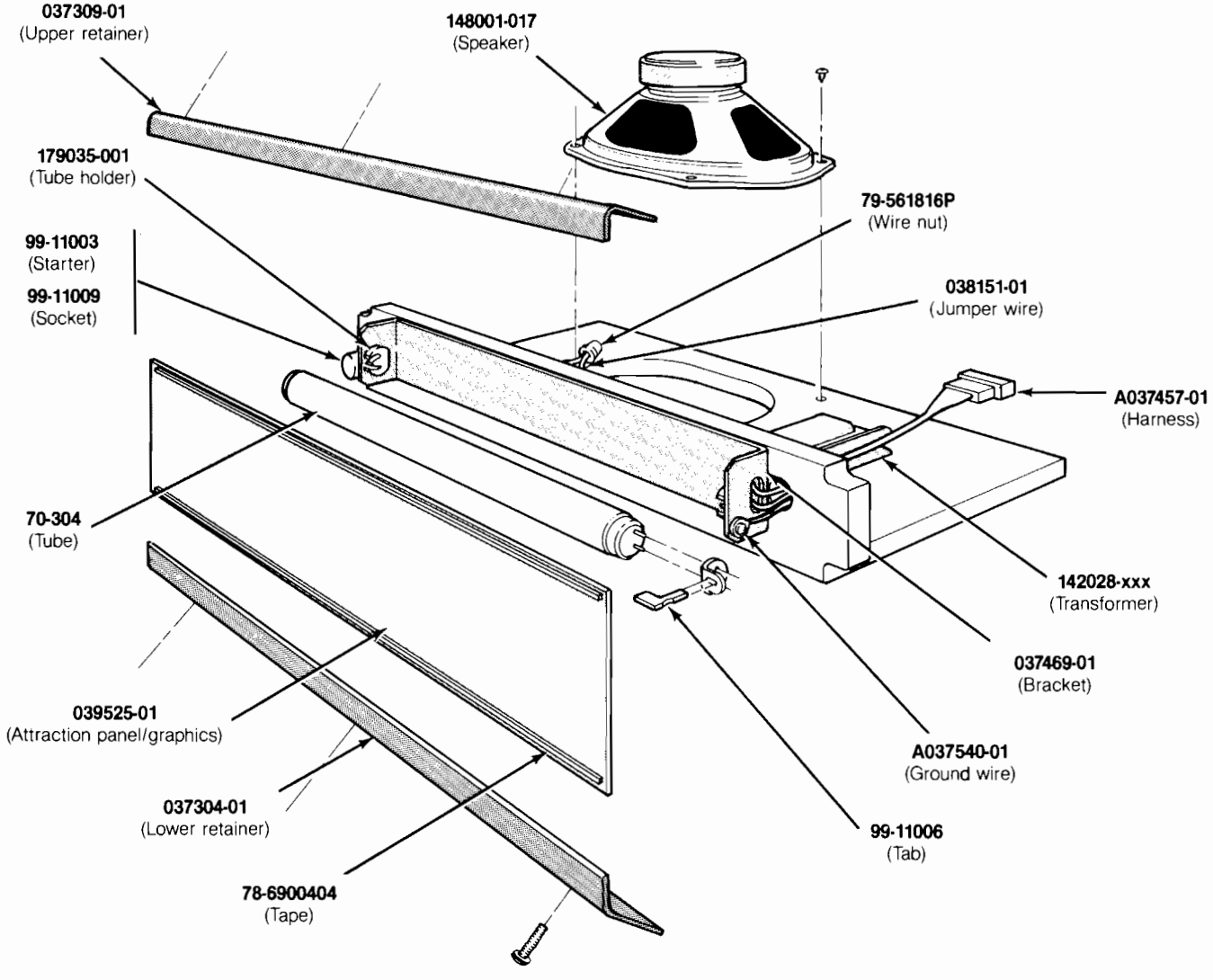

NOTE

To ensure that the fluorescent tube starts, make sure the ground wire is firmly attached to both the ballast transformer and the steel tube bracket.

Figure 4-2 Fluorescent Tube and Speaker Assembly A038161-01 & -02 A

Fluorescent Tube and Speaker Assembly Parts List

Part No.	*Description*
A037457-01	Tube and Speaker Harness Assembly
A037540-01	Ground Wire with Ring Lug
70-304	18-Inch, 15-Watt, Cool White Fluorescent Tube
78-6900404	Vinyl Foam Single-Coated Adhesive Tape, ¼-Inch Wide x ¼ Inch Thick *(48 inches required)*
79-561816P	Spring-Connector Wire Nut for 16- to 18-Gauge Wires
99-11003	Fluorescent Tube Starter
99-11006	Fluorescent Tube Locking Tab *(consists of two pieces)*
99-11009	Starter Socket
037304-01	Lower Attraction Panel Retainer
037309-01	Upper Attraction Panel Retainer
037469-01	Steel Tube Bracket
038151-01	15-Inch Jumper Wire
039525-01	Attraction Panel with Graphics
142028-001	60 Hz, 118 V, Ballast Transformer *(used on A038161-01 assembly)*
142028-002	50 Hz, 118 V, Ballast Transformer *(used on A038161-02 assembly)*
148001-017	6 x 9-Inch Oval, 8 Ω, 6-Ounce, Shielded High-Fidelity Speaker
179035-001	2-Pin Fluorescent Tube holder

C. Video Display Assemblies

NOTE
Amplifone CRT (A201001-01) and Deflection PCB (A201014-01) are shipped as a matched, calibrated pair and should be used as such.

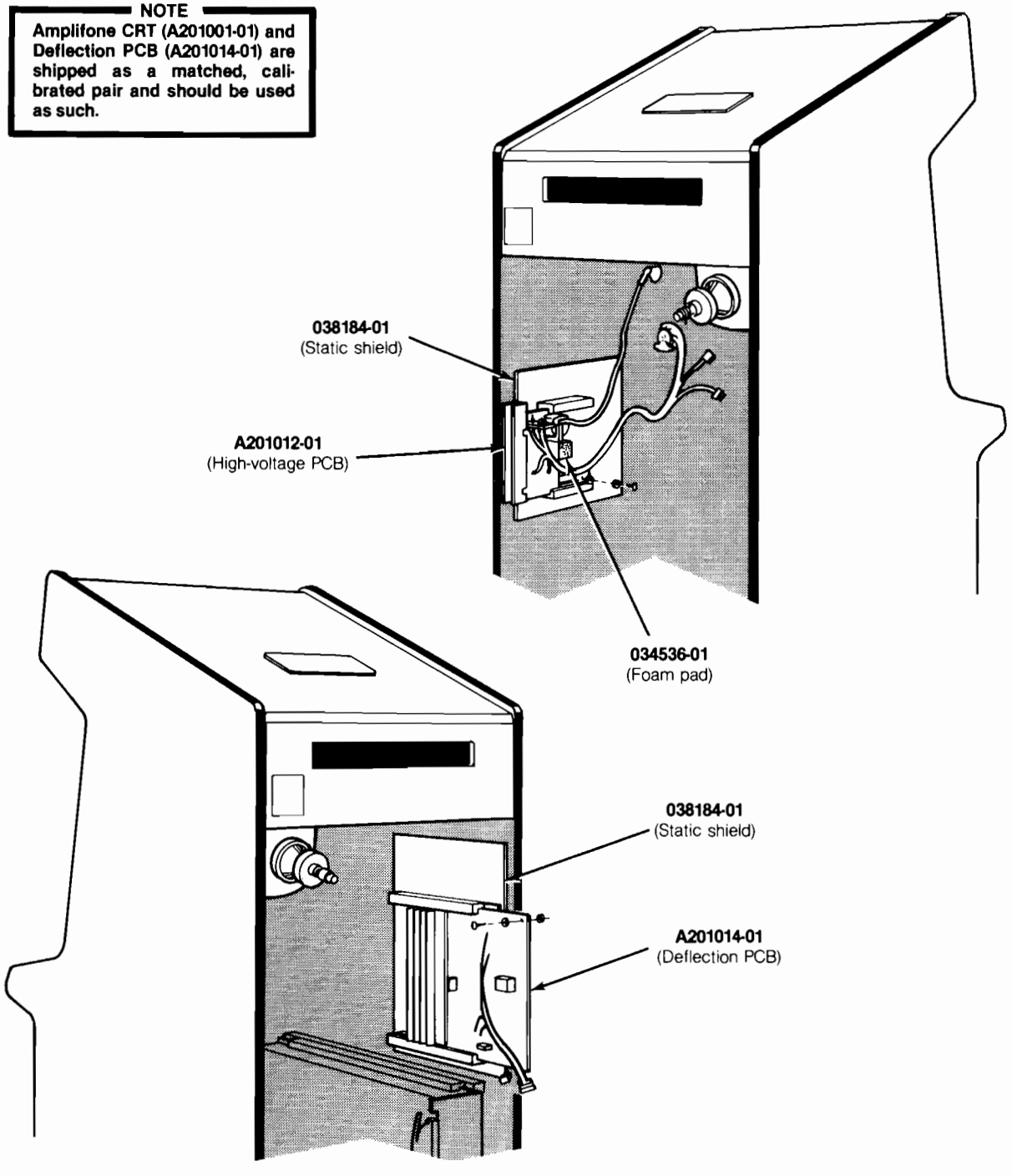

Figure 4-3 Amplifone Video Display Assembly A200000-01 B

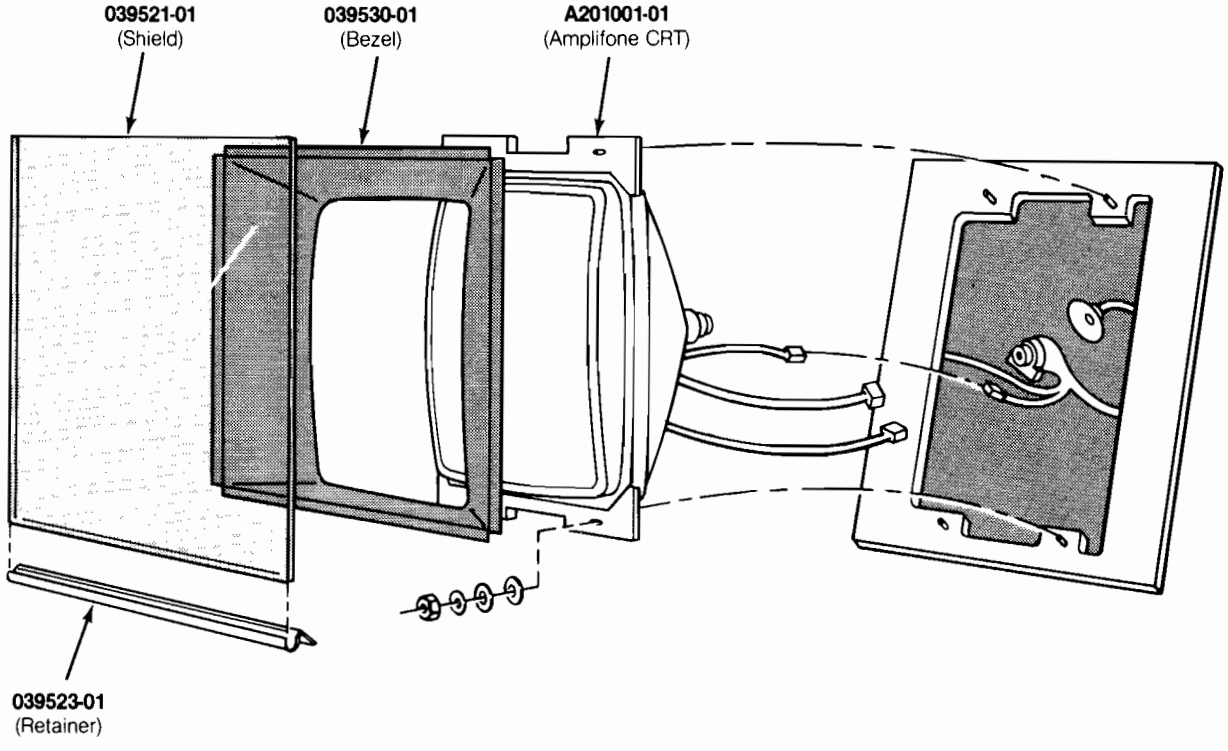

Figure 4-3 Amplifone Video Display Assembly, continued
A200000-01 B
Parts List

Part No.	*Description*
A201001-01	19-Inch Amplifone Color X-Y CRT
A201012-01	High-Voltage PCB
A201014-01	Deflection PCB
034536-01	Foam Pad *(used with Deflection and High Voltage PCBs)*
038184-01	Static Shield
039521-01	Display Shield
039523-01	Display Shield Retainer
039530-01	Display Bezel

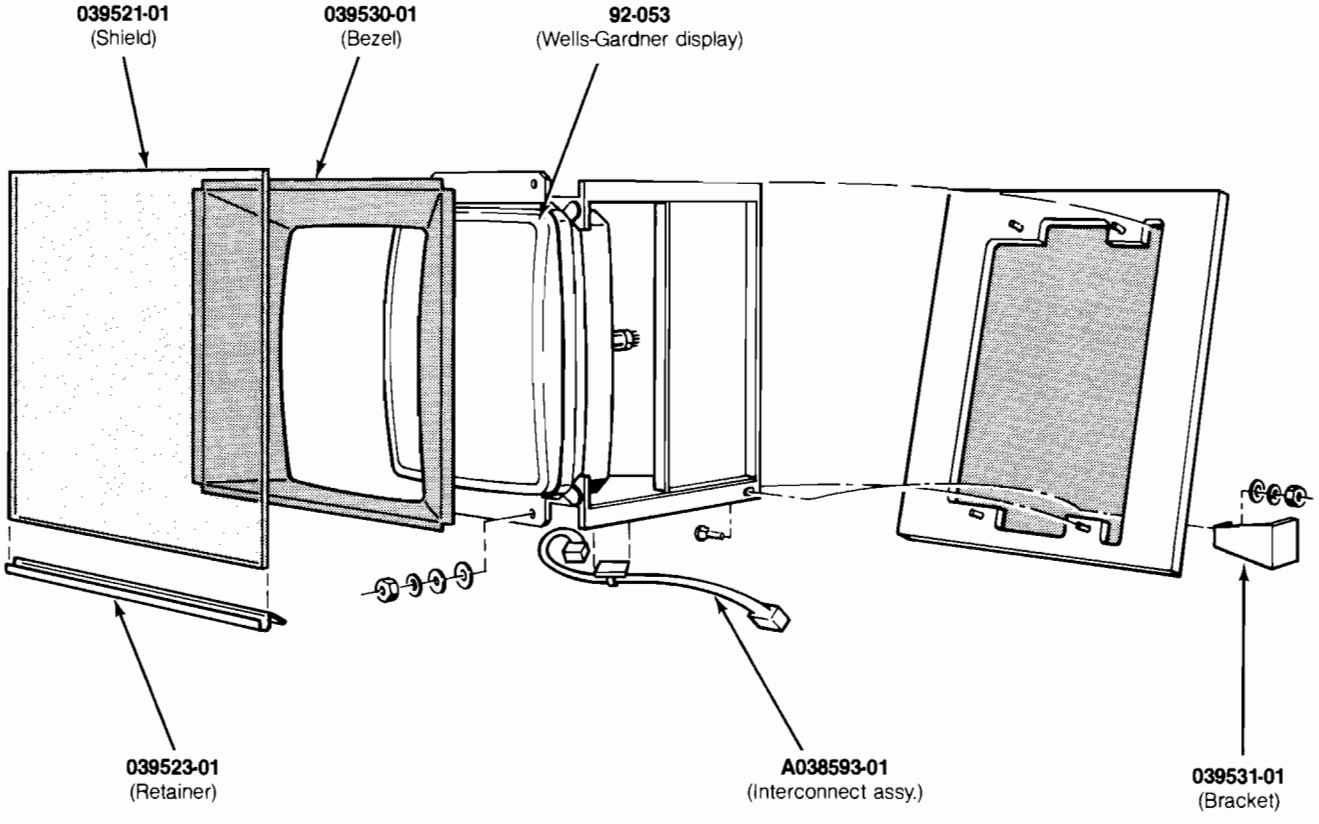

Figure 4-4 Wells-Gardner Video Display Assembly A038590-01 A Parts List

Part No.	*Description*
A038593-01	Wells-Gardner Interconnect Harness Assembly
92-053	19-Inch Wells-Gardner Color X-Y Video Display
039521-01	Display Shield
039530-01	Display Bezel
039523-01	Display Shield Retainer
039531-01	Metal Support Bracket

D. Control Panel Assembly

WARNING

Players may receive an electrical shock if this control panel is not properly grounded! After servicing any parts on the panel, make sure that the ground wire is firmly attached to the metal tab on the inside of the control panel.

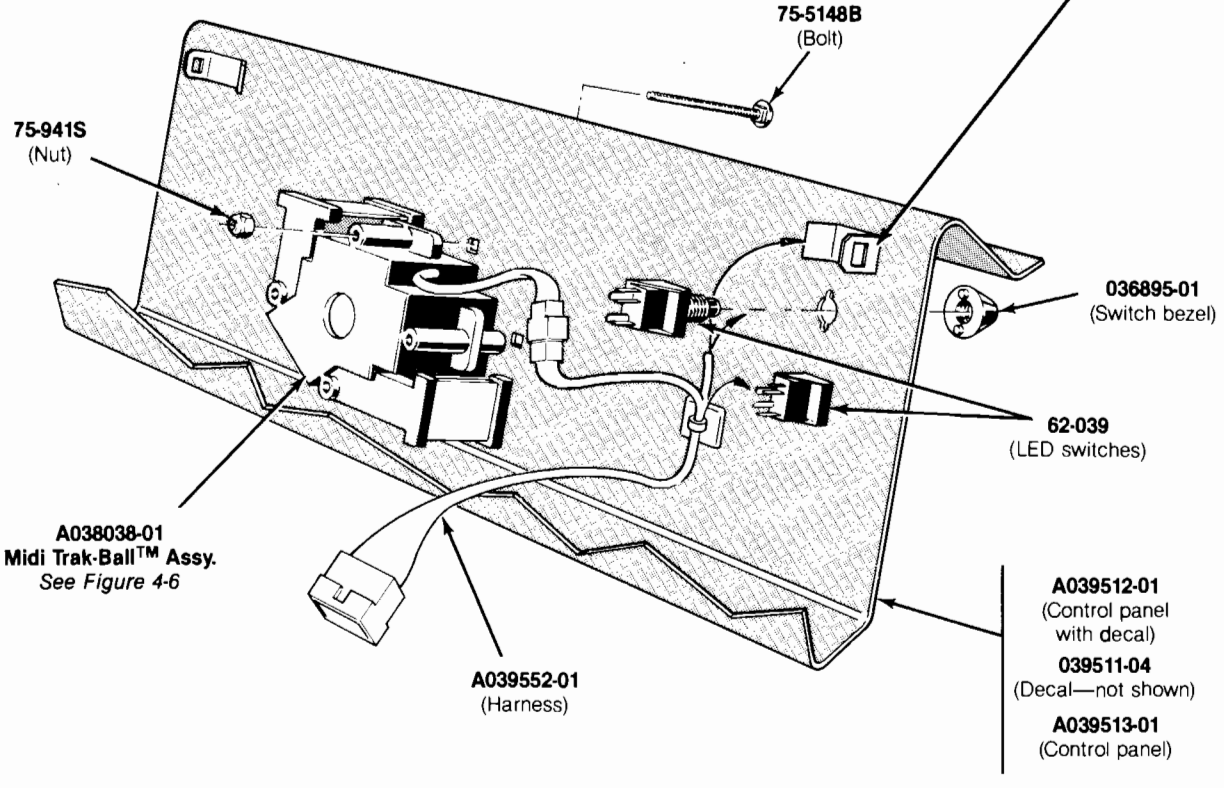

Figure 4-5 Control Panel Assembly A039514-01 A

Parts List

Part No.	*Description*
A038038-01	Midi Trak-Ball™ Assembly
A039512-01	Control Panel with Decal
A039513-01	Control Panel
A039552-01	Control Panel Harness Assembly
039511-04	Control Panel Decal *(not shown)*
62-039	SPDT Momentary Pushbutton Start Switch with Red Light-Emitting Diode
75-941S	#10-24 Self-Locking Nut
75-5148B	#10-24 Black Carriage Bolt
036895-01	Black Molded Switch Bezel

E. Midi Trak-Ball™ Assembly

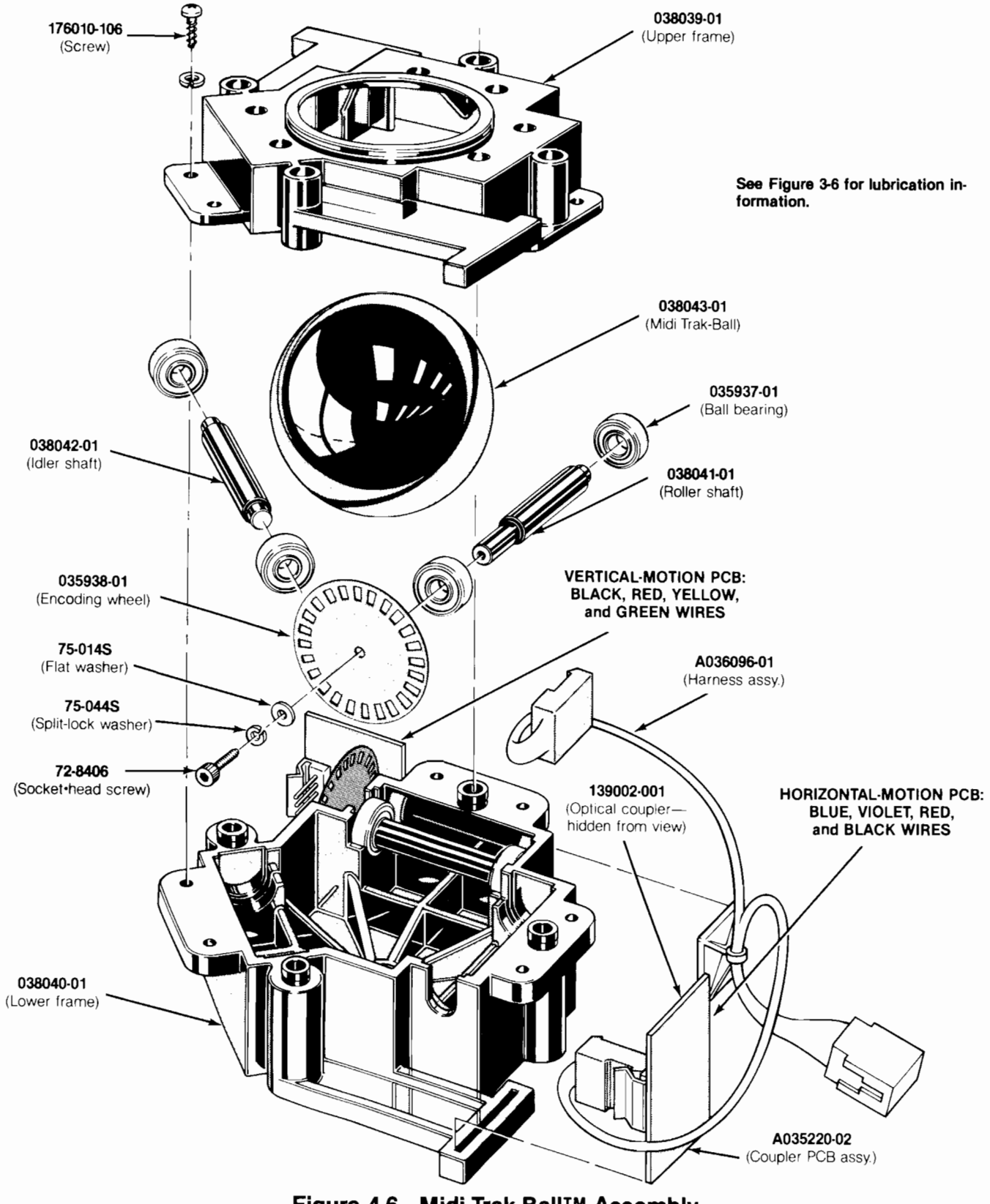

Figure 4-6 Midi-Trak-Ball™ Assembly A038038-01 B

Midi-Trak-Ball™ Assembly
Parts List

Part No.	*Description*
A035220-02	Coupler PCB Assembly *(includes Radial Optical Coupler)*
A036096-01	Harness Assembly
72-8406	#4-40 x ⅜-Inch, Hex Socket-Head Steel Machine Screw
75-014S	#4 Flat SAE-Standard, Zinc-Plated Steel Washer
75-044S	#4 Split-Lock, Zinc-Plated Steel Washer
034168-01	Label with Lubrication Instructions *(not shown)*
035937-01	Ball Bearing *(6 per assembly)*
035938-01	Etched Encoding Wheel
038039-01	Upper Black Plastic Frame
038040-01	Lower Black Plastic Frame
038041-01	Roller Shaft
038042-01	Idler Shaft
038043-01	Midi-Trak-Ball *(3-inch diameter)*
139002-001	Radial Optical Coupler *(located on the Coupler PCB Assembly)*
176010-106	#8 x ⅜-Inch Cross-Recessed, Pan-Head, Zinc-Plated Steel Screw
107013-001	3-In-One Oil lubricant

F. Utility Panel Assembly

NOTE

Only the Ireland-Built cabinet has two coin counters.

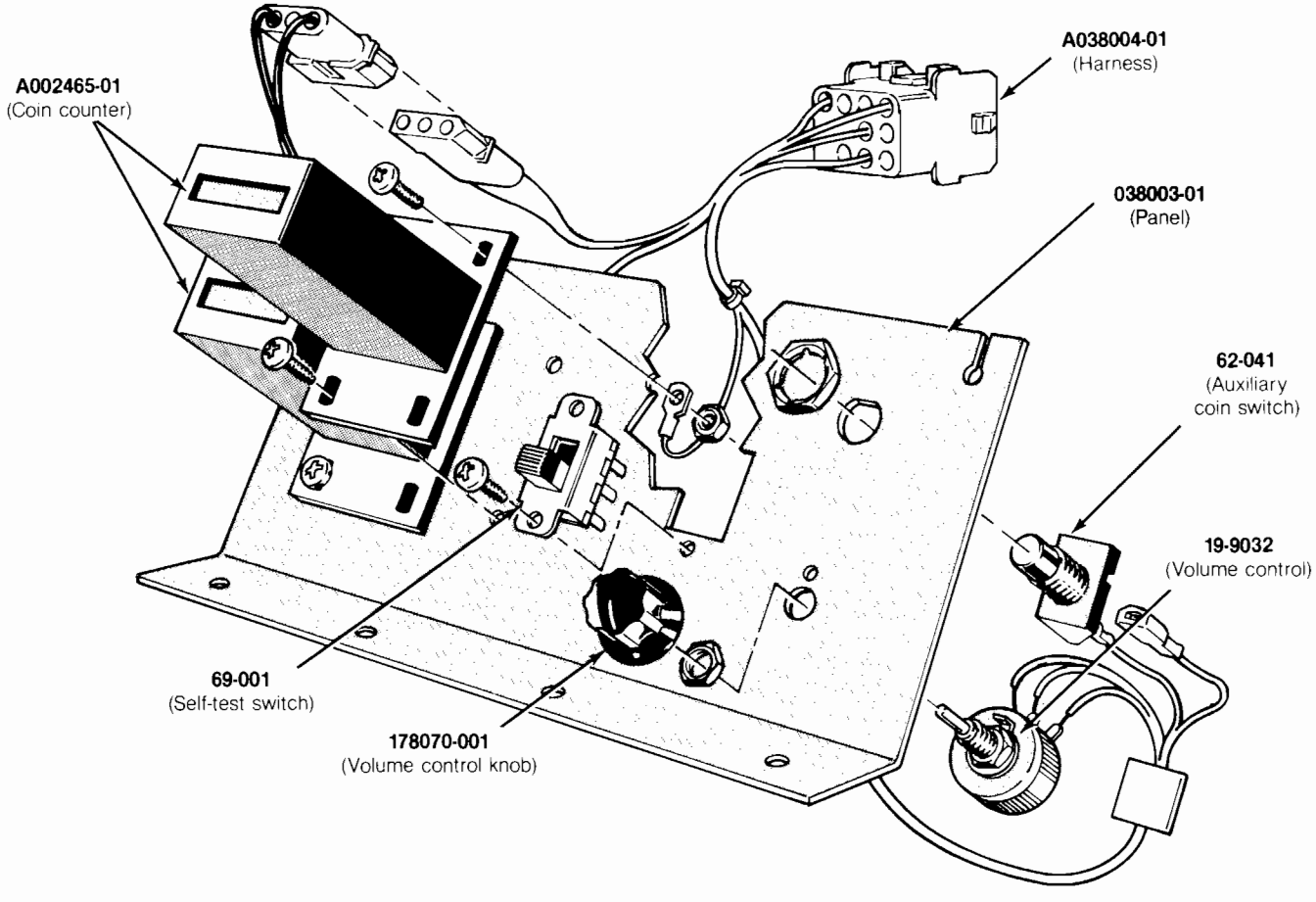

Figure 4-7 Utility Panel Assembly A038002-01 & -02 F Parts List

Part No.	*Description*
A002465-01	6 V Coin Counter
A038004-01	Utility Panel Harness
19-9032	Volume Control
62-041	SPDT Momentary-Contact Pushbutton Auxiliary Coin Switch with Black Cap
69-001	DPDT Self-Test Switch
038003-01	Utility Panel
178070-001	Volume Control Knob

G. Coin Door Assemblies

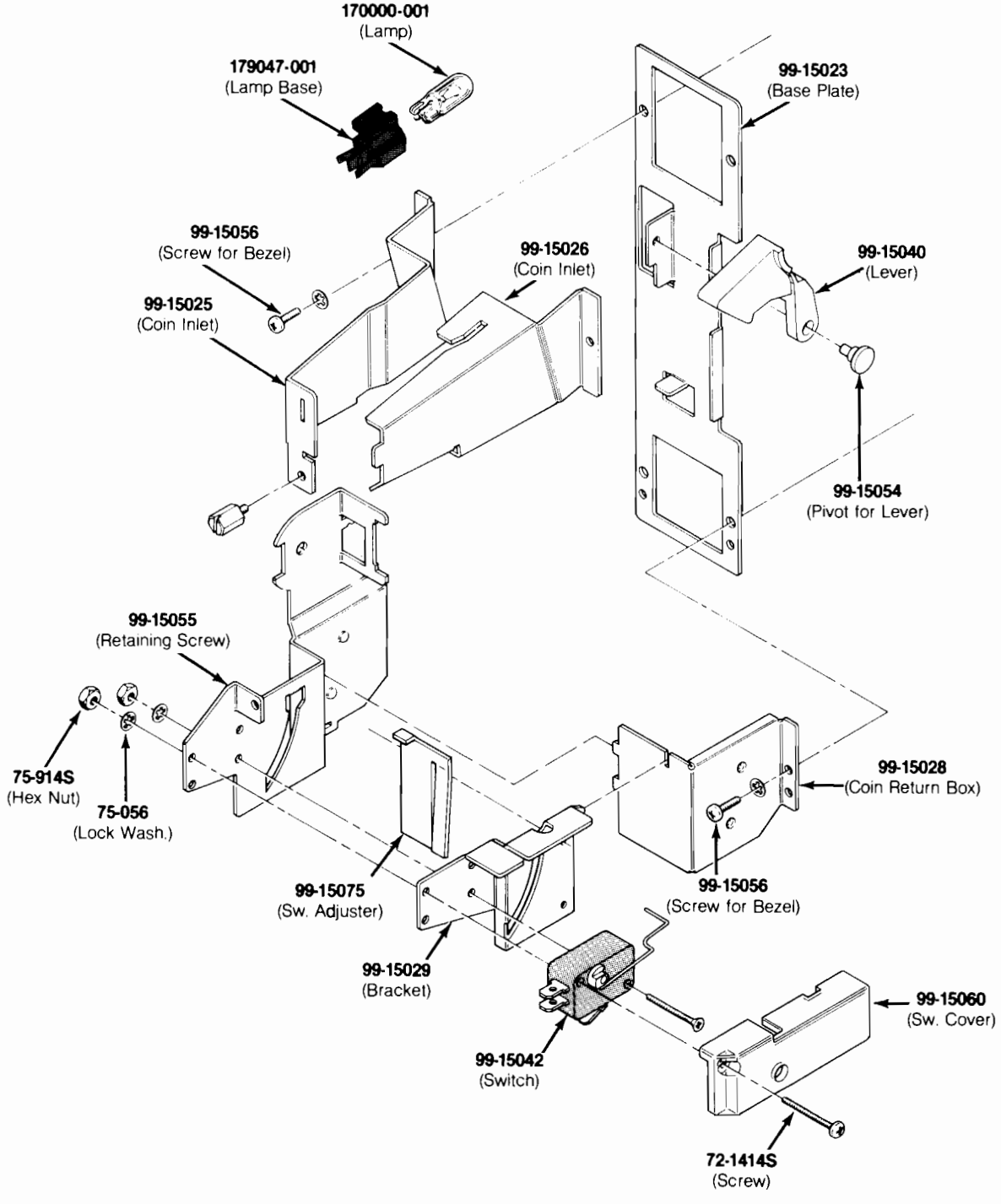

Figure 4-8 Vertically Mounted Coin Door Assembly 171034-xxx A

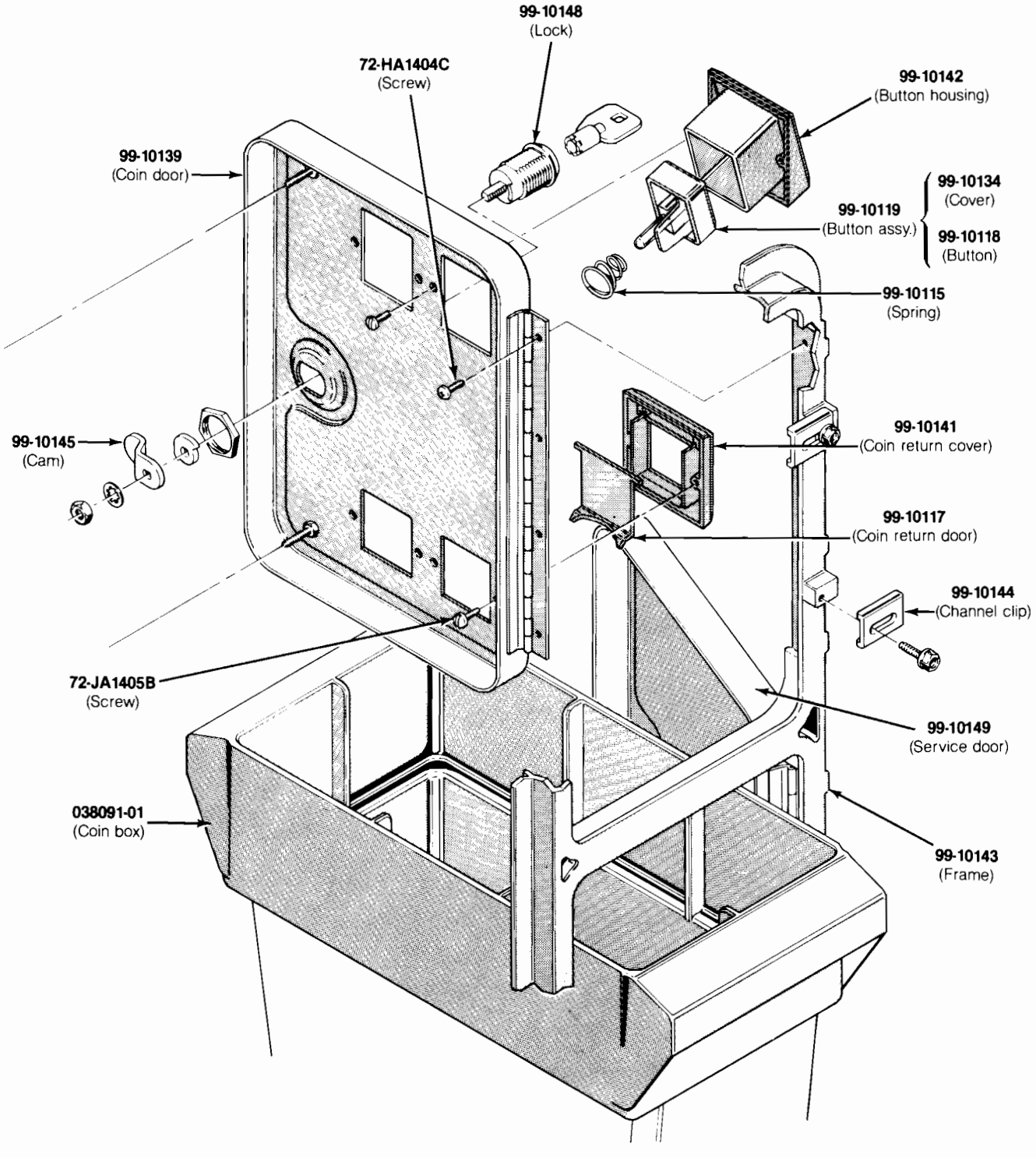

171034-001 — U.S. 25¢/25¢ Coin Door
171034-003 — Canadian 25¢/25¢ Coin Door
171034-005 — U.K. 10 P/50 P Coin Door
171034-006 — U.K. 20 P/50 P Coin Door
171034-009 — German 2 M/1 M Coin Door
171034-010 — German 2 M/5 M Coin Door
171034-011 — German 1 M/5 M Coin Door
171034-015 — French 2 F/1 F Coin Door

Figure 4-8 Vertically Mounted Coin Door Assembly, continued
171034-xxx A

Vertically Mounted Coin Door Assembly
Parts List

Part No.	*Description*
A037542-01	Harness Assembly
72-1414S	#4-40 × 7/8-Inch Cross-Recessed Pan-Head Steel Machine Screw
75-056	#6 Internal-Tooth Zinc-Plated Steel Lock Washer
75-914S	#4-40 Steel Machine Hex Nut
75-3414S	#4-40 × 7/8-Inch 82° Cross-Recessed Flat-Head Steel Machine Screw
99-15001	Coin Return Button with U.S. 25¢ Price Plate
99-15002	Coin Return Button with U.S. $1 Price Plate
99-15003	Coin Return Button with German 1 DM Price Plate
99-15004	Coin Return Button with German 2 DM Price Plate
99-15005	Coin Return Button with German 5 DM Price Plate
99-15006	Coin Return Button with Belgian 5 Fr Price Plate
99-15007	Coin Return Button with French 1 Fr Price Plate
99-15008	Coin Return Button with Japanese 100 Yen Price Plate
99-15009	Coin Return Button with British 10 Pence Price Plate
99-15010	Coin Return Button with Australian 20¢ Price Plate
99-15011	Coin Return Button with Italian 100 Lire Price Plate
99-15023	Base Plate
99-15025	Left Half of Coin Inlet
99-15026	Right Half of Coin Inlet
99-15027	Side Plate of Coin Return Box
99-15028	Base Plate of Coin Return Box
99-15029	Switch Bracket
99-15036	Metal Coin Return Cover
99-15038	Bezel for Coin Return Button
99-15039	Metal Bezel for Coin Return Cover
99-15040	Coin Return Lever
99-15042	Coin Switch for U.S. 25¢
99-15052	Spring for Coin Return Button
99-15054	Pivot for Coin Return Lever
99-15055	Retaining Screw
99-15056	#4-40 × 5/16-Inch Cross-Recessed Pan-Head Steel Machine Screw
99-15060	Switch Cover
99-15063	Screw for Hinge
99-15066	Screw for Clamp
99-15067	Lock Assembly
99-15070	Doors and Frame
99-15071	Clamp for Frame
99-15072	Door Frame
99-15073	Upper Door
99-15074	Lower Door
99-15075	Switch Adjuster
038091-01	Coin Box *(Not included in assembly) Acceptable substitute is part number A037491-01*
170000-001	6.3 V Miniature Wedge-Base Incandescent Lamp
171006-035	Metal Coin Mechanism
179047-001	Lamp Base

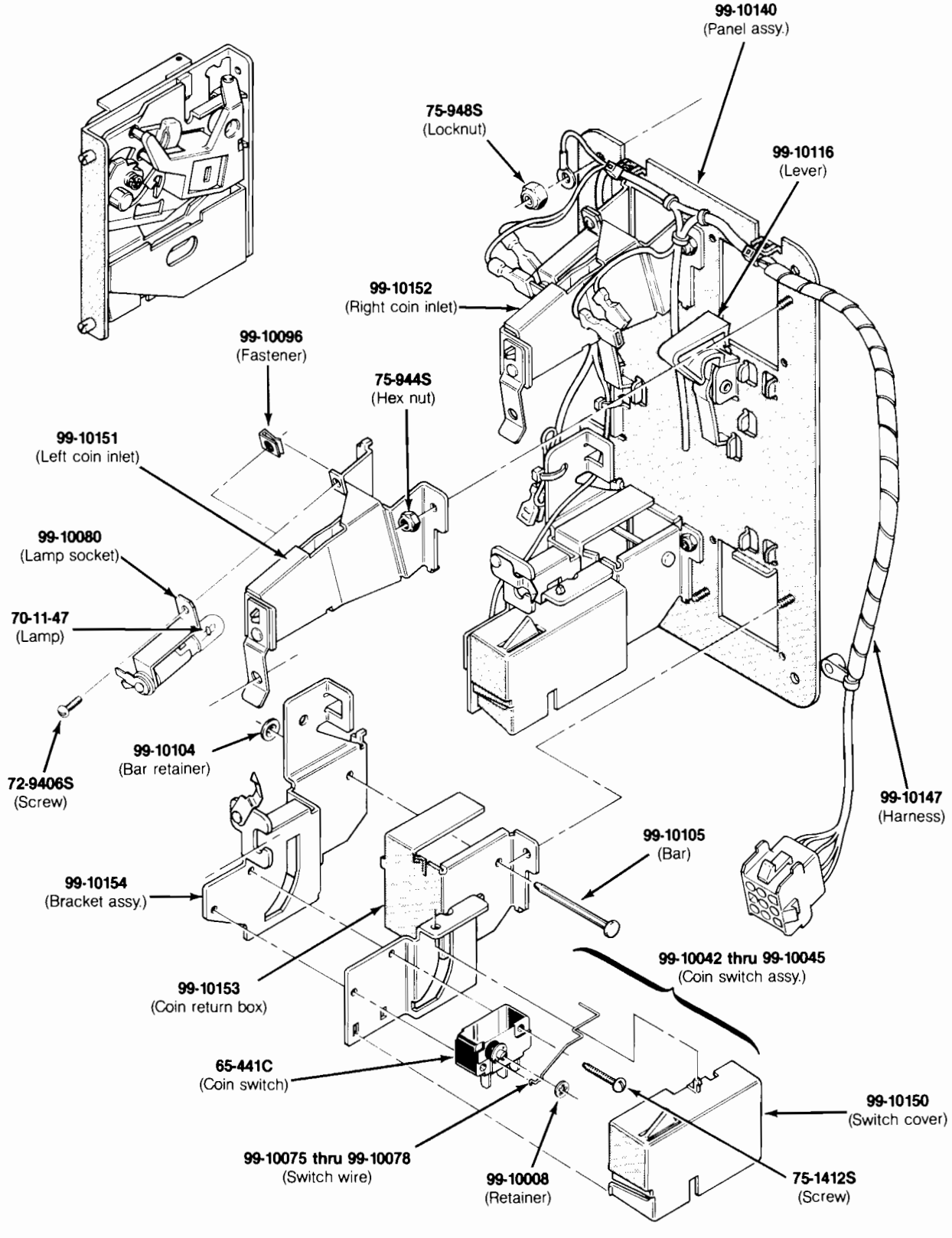

Figure 4-9 American-Made Coin Door Assembly 171027-001 A

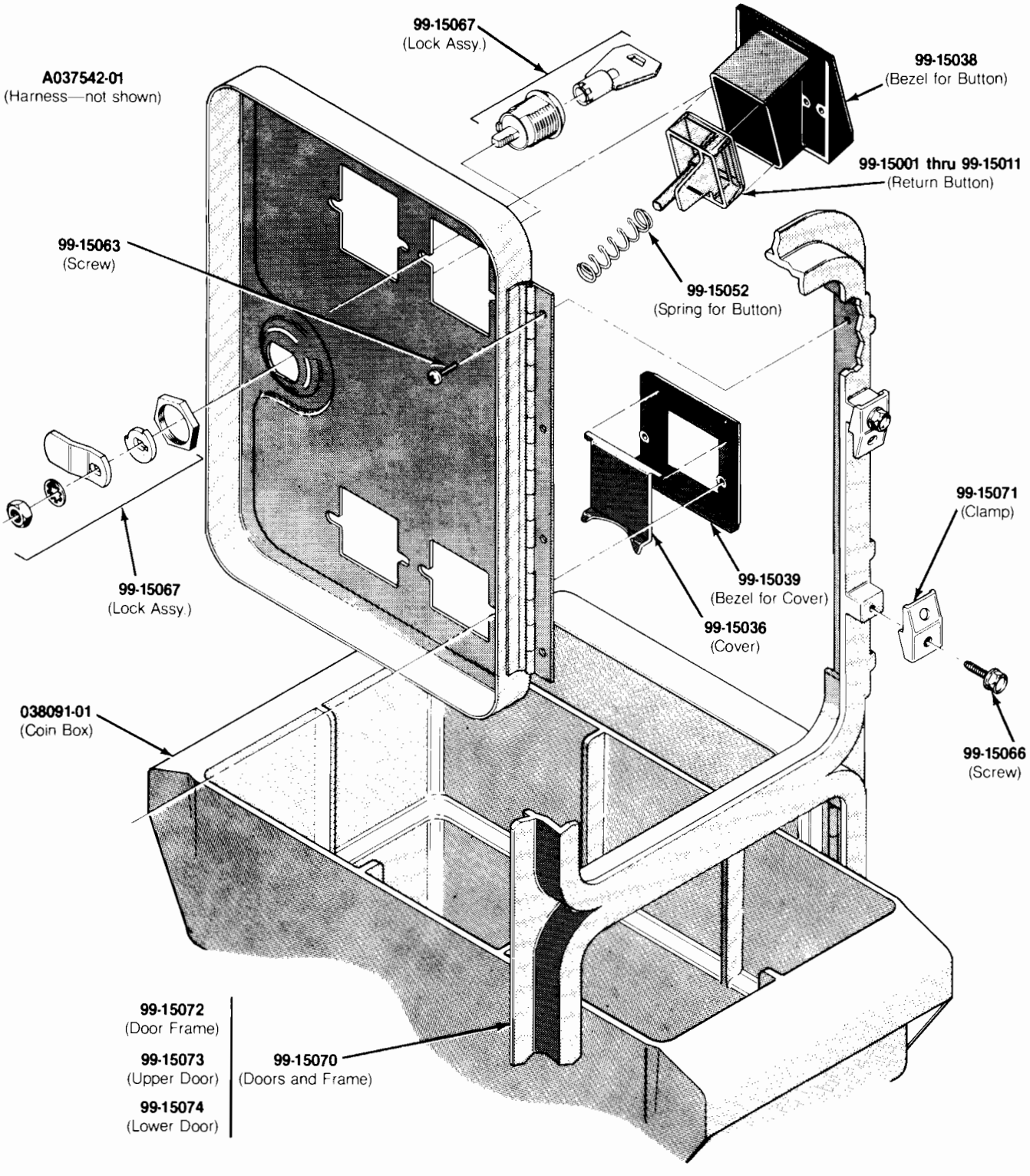

Figure 4-9 American-Made Coin Door Assembly, continued
171027-001 A

American-Made Coin Door Assembly
Parts List

Part No.	*Description*
171006-035	Metal Coin Mechanism for U.S. $.25
65-441C	Coin Switch
70-11-47	Miniature Bayonet Lamp
72-9406S	#4-40 x ⅜-Inch Truss-Head Screw
72-HA1404C	#4-40 x ¼-Inch Pan-Head Screw
72-JA1405B	#4-40 x .31-Inch Pan-Head Screw
75-1412S	#4-40 x ¾-Inch Pan-Head Screw
75-994S	#4-40 Lock Nut
99-10008	Retainer
99-10042	Coin Switch Assembly for Belgium 5 Fr and U.S. $.25
99-10043	Coin Switch Assembly for German 1 DM, Japanese 100 Yen, Swiss 1 Fr
99-10044	Coin Switch Assembly for German 2 DM, Italian 100 L, U.S. $1.00
99-10045	Coin Switch Assembly for Australian $.20, German 5 DM, British 10 P
99-10068	Coin Return Chute
99-10075	Switch wire *(included in coin switch assembly)*
99-10076	Switch wire *(included in coin switch assembly)*
99-10077	Switch wire *(included in coin switch assembly)*
99-10078	Switch wire *(included in coin switch assembly)*
99-10080	Lamp socket
99-10081	Key holder
99-10096	Fastener
99-10104	Bar retainer
99-10105	Bar
99-10115	Spring
99-10116	Plastic Coin Return Lever
99-10117	Steel Coin Return Door
99-10118	Amber Coin Return Button
99-10119	Amber Coin Button for U.S. $.25
99-10134	Coin Button Cover
99-10139	Coin Door
99-10140	Coin Door Inner-Panel Assembly
99-10141	Diecast Coin Return Cover
99-10142	Diecast Button Housing
99-10143	Coin Door Frame
99-10144	Coin Door Channel Clip
99-10145	Offset Cam *(includes 99-10148—Lock)*
99-10146	Coin Inlet Chute Assembly
99-10147	American-Made Coin Door Harness
99-10149	Service Door
99-10150	Switch Cover
99-10151	Left Coin Inlet
99-10152	Right Coin Inlet
99-10153	Coin Return Box
99-10154	Bracket Assembly

H. Printed-Circuit Boards

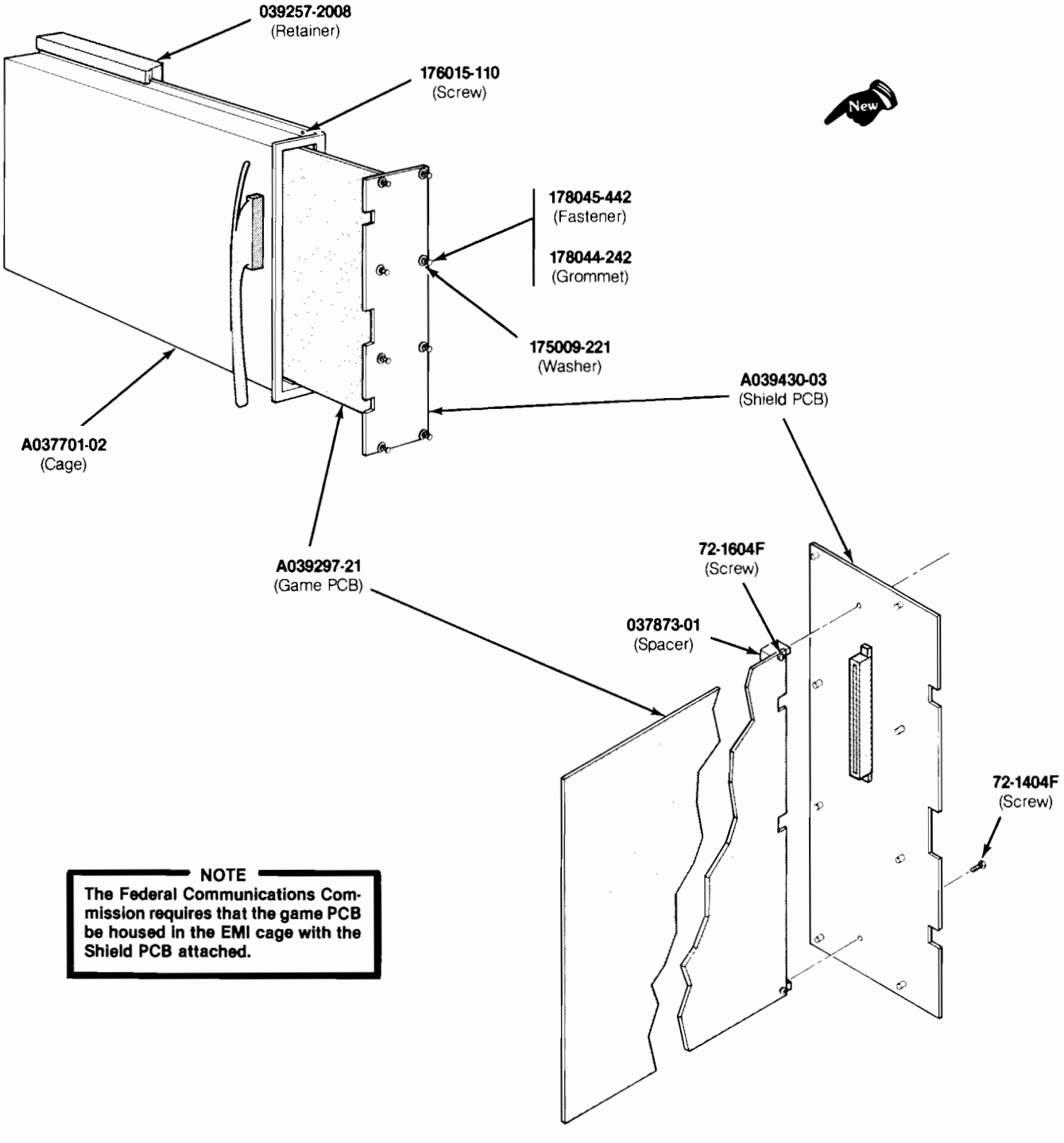

Figure 4-10 Electromagnetic Interference (EMI) Cage Assembly and Printed-Circuit Board Mounting Hardware

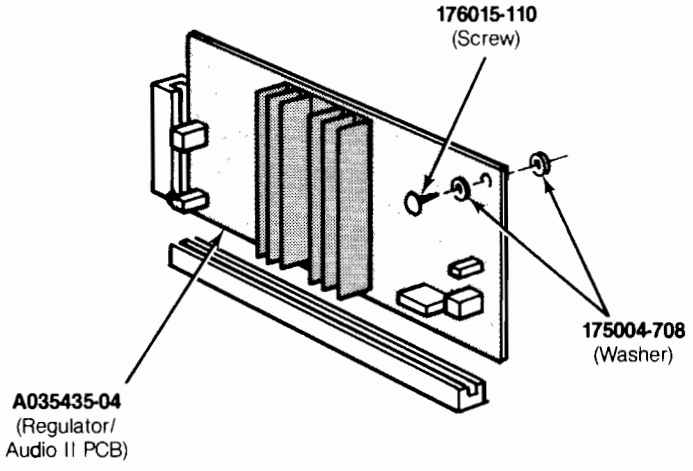

Figure 4-10 Electromagnetic Interference (EMI) Cage Assembly and Printed-Circuit Board Mounting Hardware, continued
Parts List

Part No.	*Description*
A037701-02	EMI Cage *(includes guide)*
A037430-03	EMI Shield PCB
72-1404F	#4-40 x ¼-Inch Cross-Recessed Steel Screw
72-1604F	#6-32 x ¼-Inch Cross-Recessed Steel Screw
037873-01	Spacer
175009-221	Plastic Washer
176015-110	#10 x ⅝-Inch Cross-Recessed Pan-Head Screw
178045-442	Snap-In Fastener
034536-02	Foam Pad *(not shown)*
175004-708	#8 Flat Fiber Washer

Please see *CO-221-01*, supplement to TM-221, for information on this section.

Figure 4-11 EMI Shield PCB Assembly A037430-03 A

EMI Shield PCB Assembly
Parts List

Please see *CO-221-01*, supplement to TM-221, for information on this section.

NOTICE TO ALL PERSONS RECEIVING THIS DRAWING
CONFIDENTIAL. Reproduction forbidden without the specific written permission of Atari, Inc., Sunnyvale, CA. This drawing is only conditionally issued, and neither receipt nor possession thereof confers or transfers any right in, or license to use, the subject matter of the drawing or any design or technical information shown thereon, nor any right to reproduce this drawing or any part thereof. Except for manufacture by vendors of Atari, Inc., and for manufacture under the corporation's written license, no right to reproduce this drawing is granted or the subject matter thereof unless by written agreement with or written permission from the corporation.

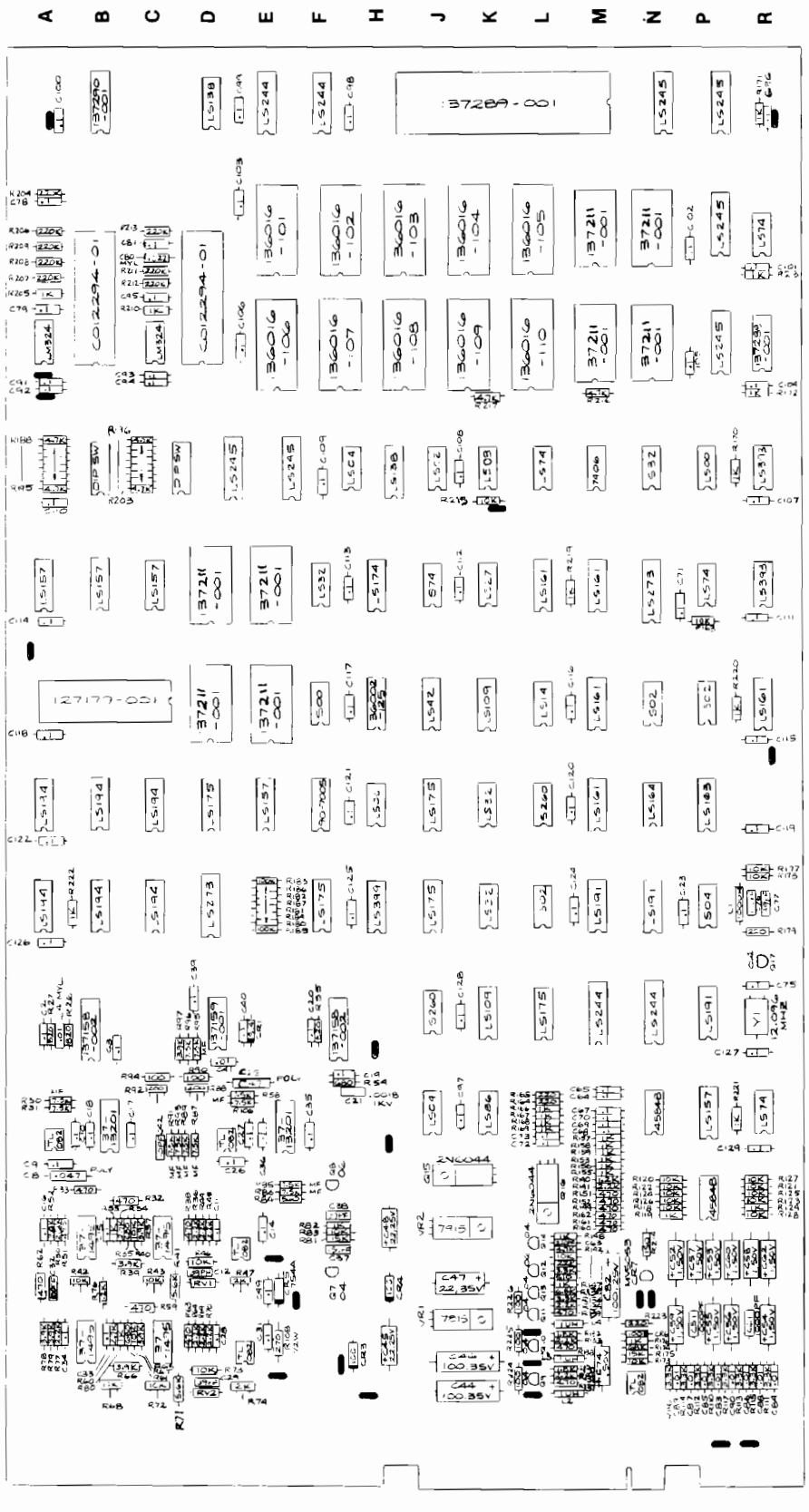

Figure 4-12 Quantum Game Printed Circuit Board Assembly A039297-21 A

Quantum Game Printed-Circuit Board Assembly Parts List

Designator	*Description*	*Part No.*
	Capacitors	
C2, C3	0.1 μF, +80, -20%, 50 V, Ceramic Capacitor	122002-104
C4	0.01 μF, 100 V, Radial-Lead Mylar Capacitor	21-101103
C8	0.047 μF, ±10%, 50 V, Axial-Lead Polycarbon Capacitor	122010-473
C9-C11	0.1 μF, +80, -20%, 50 V, Ceramic Capacitor	122002-104
C12	39 pF, ±5%, 100 V, Axial-Lead Ceramic Capacitor	128002-390
C14-C20	0.1 μF, +80, -20%, 50 V, Ceramic Capacitor	122002-104
C21	0.0018 μF, ±10%, 1 kV, Ceramic Capacitor	27-102182
C25	0.047 μF, ±10%, 50 V, Axial-Lead Polycarbon Capacitor	122010-473
C26-C28	0.1 μF, +80, -20%, 50 V, Ceramic Capacitor	122002-104
C29	39 pF, ±5%, 100 V, Axial-Lead Ceramic Capacitor	128002-390
C31	0.1 μF, +80, -20%, 50 V, Ceramic Capacitor	122002-104
C32	100 pF, ±5%, 100 V, Axial-Lead Ceramic Capacitor	122016-101
C33-C36	0.1 μF, +80, -20%, 50 V, Ceramic Capacitor	122002-104
C37	150 pF, ±5%, 100 V, Axial-Lead Ceramic Capacitor	122016-151
C38	39 pF, ±5%, 100 V, Axial-Lead Ceramic Capacitor	128002-390
C39, C40	0.1 μF, +80, -20%, 50 V, Ceramic Capacitor	122002-104
C41	0.01 μF, +80, -20%, 25 V, Axial-Lead Ceramic Capacitor	122005-103
C42	10 pF, ±5%, 100 V, Axial-Lead Ceramic Capacitor	122016-100
C44	100 μF 35 V Aluminum Electrolytic Axial-Lead Capacitor	24-350107
C45	22 μF 25 V Aluminum Electrolytic Axial-Lead Capacitor	24-250226
C46	100 μF 35 V Aluminum Electrolytic Axial-Lead Capacitor	24-350107
C47	22 μF 35 V Aluminum Electrolytic Axial-Lead Capacitor	24-350226
C48	22 μF 25 V Aluminum Electrolytic Axial-Lead Capacitor	24-250226
C49	0.1 μF, +80, -20%, 50 V, Ceramic Capacitor	122002-104
C51	1000 pF, ±5%, 100 V, Axial-Lead Ceramic Capacitor	122016-102
C52-C60	1.0 μF 50 V Aluminum Electrolytic Axial-Lead Capacitor	24-500105
C61	1000 pF, ±5%, 100 V, Axial-Lead Ceramic Capacitor	122016-102
C62	1.0 μF 50 V Aluminum Electrolytic Axial-Lead Capacitor	24-500105
C63	2220 pF, ±5%, 100 V, Axial-Lead Ceramic Capacitor	122016-221
C64, C65	0.1 μF, +80, -20%, 50 V, Ceramic Capacitor	122002-104
C67-C73	0.1 μF, +80, -20%, 50 V, Ceramic Capacitor	122002-104
C74	1.0 μF 50 V Aluminum Electrolytic Axial-Lead Capacitor	24-500105
C75	0.1 μF, +80, -20%, 50 V, Ceramic Capacitor	122002-104
C76	100 pF, ±5%, 100 V, Axial-Lead Ceramic Capacitor	122016-101
C77	39 pF, ±5%, 100 V, Axial-Lead Ceramic Capacitor	128002-390
C78, C79	0.1 μF, +80, -20,%50 V, Ceramic Capacitor	122002-104
C80	0.022 μF, 100 V, Radial-Lead Mylar Capacitor	21-101223
C81	0.1 μF, +80, -20,%50 V, Ceramic Capacitor	122002-104
C82	100 μF 25 V Aluminum Electrolytic Axial-Lead Capacitor	24-250107
C83-C90	0.01 μF, +80, -20%, 25 V, Axial-Lead Ceramic Capacitor	122005-103
C91-C129	0.1 μF, +80, -20%, 50 V, Ceramic Capacitor	122002-104

(Continued on next page)

Quantum Game Printed-Circuit Board Assembly, continued
Parts List

Designator	*Description*	*Part No.*
	Diodes	
CR1	Type-1N914, 250 mW, 100 V Switching Diode	31-1N914
CR3, CR4	Type-1N100, 20 mA, 80 V Diode	31-1N100
CR5	Type-1N754A, 400 mW, 6.8 V Zener Diode	131002-001
CR6	Type-1N100, 20 mA, 80 V Diode	31-1N100
CR7	Type-MV5053 Light-Emitting Diode	38-MV5053
	Inductors	
L1	100 μH, ± 10% Inductor	141002-001
L2-4	1 μH, ½ W Inductor	141007-001
	Integrated Circuits	
VR1	Voltage Regulator Integrated Circuit	37-7815
VR2	Voltage Regulator Integrated Circuit	37-7915
1B	Programmable Array Logic Integrated Circuit	137290-001
1D	Type-74LS138 Integrated Circuit	137177-001
1E, 1F	Type-74LS244 Integrated Circuit	37-74LS244
1K/L	Type-MC68000LC Integrated Circuit	137289-001
1N	Type-74LS245 Integrated Circuit	37-74LS245
1P	Type-74LS245 Integrated Circuit	37-74LS245
2/3B, 2/3D	Audio I/O N-Channel MOS/LSI Custom Integrated Circuit	C012294-01
2P	Type-74LS245 Integrated Circuit	37-74LS245
2R	Type-74LS74 Integrated Circuit	37-74LS74
3A	Type-LM324 Integrated Circuit	37-LM324
3C	Type-LM324 Integrated Circuit	37-LM324
3P	Type-74LS245 Integrated Circuit	37-74LS245
4D/E	Type-74LS245 Integrated Circuit	37-74LS245
4E/F	Type-74LS245 Integrated Circuit	37-74LS245
4F/H	Type-74S04 Integrated Circuit	37-74LS04
4H/J	Type-74LS138 Integrated Circuit	137177-001
4J	Type-74LS02 Integrated Circuit	37-74LS02
4K	Type-74LS08 Integrated Circuit	37-74LS08
4L	Type-74LS74 Integrated Circuit	37-74LS74
4M	Type-7406 Integrated Circuit	37-7406
4N	Type-74S32 Integrated Circuit	37-74S32
4P	Type-74LS00 Integrated Circuit	37-74LS00
4R	Type-74LS393 Integrated Circuit	37-74LS393
5A-5C	Type-74LS157 Integrated Circuit	37-74LS157
5F	Type-74LS32 Integrated Circuit	37-74LS32
5H	Type-74LS174 Integrated Circuit	37-74LS174
5J	Type-74S74 Integrated Circuit	37-74S74
5K	Type-74LS27 Integrated Circuit	37-74LS27
5L, 5M	Type-74LS161 Integrated Circuit	37-74LS161
5N	Type-74LS273 Integrated Circuit	37-74LS273

(Continued on next page)

Quantum Game Printed-Circuit Board Assembly, continued
Parts List

Designator	*Description*	*Part No.*
5P	Type-74LS74 Integrated Circuit	37-74LS74
5R	Type-74LS393 Integrated Circuit	37-74LS393
6B	Vector Generator Integrated Circuit	127179-001
6F	Type-74S00 Integrated Circuit	37-74S00
6J	Type-74LS42 Integrated Circuit	37-74LS42
6K	Type-74LS109 Integrated Circuit	37-74LS109
6L	Type-74LS14 Integrated Circuit	37-74LS14
6M	Type-74LS161 Integrated Circuit	37-74LS161
6N	Type-74S02 Integrated Circuit	37-74S02
6P	Type-74S02 Integrated Circuit	37-74S02
6R	Type-74LS161 Integrated Circuit	37-74LS161
7A-7C	Type-74LS194 Integrated Circuit	37-74LS194
7D	Type-74LS175 Integrated Circuit	37-74LS175
7E	Type-74LS157 Integrated Circuit	37-74LS157
7F	Type-82S25 Integrated Circuit	90-7005
7H	Type-74LS00 Integrated Circuit	37-74LS00
7J	Type-74LS175 Integrated Circuit	37-74LS175
7K	Type-74LS32 Integrated Circuit	37-74LS32
7L	Type-74S260 Integrated Circuit	37-74S260
7M	Type-74LS161 Integrated Circuit	37-74LS161
7N	Type-74LS164 Integrated Circuit	37-74LS164
7P	Type-74S163 Integrated Circuit	137274-001
8A-8C	Type-74LS194 Integrated Circuit	37-74LS194
8D	Type-74LS273 Integrated Circuit	37-74LS273
8F	Type-74LS175 Integrated Circuit	37-74LS175
8H	Type-74LS399 Integrated Circuit	37-74LS399
8J	Type-74LS175 Integrated Circuit	37-74LS175
8K	Type-74LS32 Integrated Circuit	37-74LS32
8L	Type-74S02 Integrated Circuit	37-74S02
8M, 8N	Type-74LS191 Integrated Circuit	37-74LS191
8P	Type-74S04 Integrated Circuit	37-74S04
9B	12-Bit DAC Integrated Circuit	137158-002
9D	8-Bit DAC Integrated Circuit	137159-001
9F/H	12-Bit DAC Integrated Circuit	137158-002
9J	Type-74S260 Integrated Circuit	37-74S260
9K	Type-74LS109 Integrated Circuit	37-74LS109
9L	Type-74LS175 Integrated Circuit	37-74LS175
9M, 9N	Type-74LS244 Integrated Circuit	37-74LS244
9P	Type-74LS191 Integrated Circuit	37-74LS191
10A	Type-TL082 Integrated Circuit	37-TL082CP
10B	Quad Analog Switch Integrated Circuit	37-13201
10D	Type-TL082 Integrated Circuit	37-TL082CP
10E	Quad Analog Switch Integrated Circuit	37-13201
10J	Type-74LS04 Integrated Circuit	37-74LS04

(Continued on next page)

Quantum Game Printed-Circuit Board Assembly, continued
Parts List

Designator	*Description*	*Part No.*
10K	Type-74LS86 Integrated Circuit	37-74LS86
10N	Schmitt Trigger Integrated Circuit	37-4584B
10P	Type-74LS157 Integrated Circuit	37-74LS157
10R	Type-74LS74 Integrated Circuit	37-74LS74
11B, 11C	Multiplier Integrated Circuit	37-1495
11D/E	Type-TL082 Integrated Circuit	37-TL082CP
11P	Schmitt Trigger Integrated Circuit	37-4584B
12B, 12C	Multiplier Integrated Circuit	37-1495
12D/E	Type-TL082 Integrated Circuit	37-TL082CP
12M/N	Type-TL082 Integrated Circuit	37-TL082CP
	Miscellaneous	
	Nylon Snap-In Fastener	81-4302
	Test Point *Acceptable substitute is part no. 020670-01*	179051-002
Y1	12.096 MHz Crystal	144000-001
4B	8-Station Single-Throw Dual-Inline Package Bit Switch	66-118P1t
4C/D	8-Station Single-Throw Dual-Inline Package Bit Switch	66-118P1t
	Programmable Read-Only Memories	
2E	Electrically Programmable Read-Only Memory	136016-001
2F	Electrically Programmable Read-Only Memory	136016-002
2H/J	Electrically Programmable Read-Only Memory	136016-003
2K	Electrically Programmable Read-Only Memory	136016-004
2L	Electrically Programmable Read-Only Memory	136016-005
3E	Electrically Programmable Read-Only Memory	136016-006
3F	Electrically Programmable Read-Only Memory	136016-007
3H/J	Electrically Programmable Read-Only Memory	136016-008
3K	Electrically Programmable Read-Only Memory	136017-009
3L	Electrically Programmable Read-Only Memory	136017-010
6H	Programmable Read-Only Memory	136002-125
	Random-Access Memories	
2M, 2N	Random-Access Memory	137211-001
3M, 3N	Random-Access Memory	137211-001
3R	Random-Access Memory	137288-001
5D, 5E	Random-Access Memory	137211-001
6D, 6E	Random-Access Memory	137211-001
	Resistors	
R26, R27	820 Ω, ±5%, ¼ W Resistor	110000-821
R30, R31	7.5 kΩ, ±1%, ⅛ W Resistor	110003-752
R32, R33	470 Ω, ±5%, ¼ W Resistor	110000-471
R34	2.7 kΩ, ±5%, ¼ W Resistor	110000-272

(Continued on next page)

Quantum Game Printed-Circuit Board Assembly, continued
Parts List

Designator	*Description*	*Part No.*
R35	680 Ω, ±5%, ¼ W Resistor	110000-681
R36	2.2 kΩ, ±5%, ¼ W Resistor	110000-222
R37	3.9 kΩ, ±5%, ¼ W Resistor	110000-392
R38	470 Ω, ±5%, ¼ W Resistor	110000-471
R39	3.9 kΩ, ±5%, ¼ W Resistor	110000-392
R40	10 kΩ, ±5%, ¼ W Resistor	110000-103
R41	5.6 kΩ, ±5%, ¼ W Resistor	110000-562
R44, R45	2.2 kΩ, ±5%, ¼ W Resistor	110000-222
R46	10 kΩ, ±5%, ¼ W Resistor	110000-103
R47	2 kΩ Horizontal Potentiometer	119002-202
R50	2.2 kΩ, ±5%, ¼ W Resistor	110000-222
R51	470 Ω, ±5%, ¼ W Resistor	110000-471
R52	3.9 kΩ, ±5%, ¼ W Resistor	110000-392
R53	1 kΩ, ±5%, ¼ W Resistor	110000-102
R54	680 Ω, ±5%, ¼ W Resistor	110000-681
R55	820 Ω, ±5%, ¼ W Resistor	110000-821
R58	7.5 kΩ, ±1%, ⅛ W Resistor	110003-752
R59	470 Ω, ±5%, ¼ W Resistor	110000-471
R60	2.7 kΩ, ±5%, ¼ W Resistor	110000-272
R61	680 Ω, ±5%, ¼ W Resistor	110000-681
R62, R63	470 Ω, ±5%, ¼ W Resistor	110000-471
R64	2.2 kΩ, ±5%, ¼ W Resistor	110000-222
R65, R66	3.9 kΩ, ±5%, ¼ W Resistor	110000-392
R67	10 kΩ, ±5%, ¼ W Resistor	110000-103
R69	2.2 kΩ, ±5%, ¼ W Resistor	110000-222
R70	2.2 kΩ, ±5%, ¼ W Resistor	110000-222
R71	5.6 kΩ, ±5%, ¼ W Resistor	110000-562
R73	10 kΩ, ±5%, ¼ W Resistor	110000-103
R74	2 kΩ Horizontal Potentiometer	119002-202
R76	1.2 kΩ, ±5%, ¼ W Resistor	110000-122
R77	2.2 kΩ, ±5%, ¼ W Resistor	110000-222
R78, R79	3.9 kΩ, ±5%, ¼ W Resistor	110000-392
R80	1 kΩ, ±5%, ¼ W Resistor	110000-102
R81	15 kΩ, ±5%, ¼ W Resistor	110000-153
R82	1 kΩ, ±5%, ¼ W Resistor	110000-102
R83	10 kΩ, ±5%, ¼ W Resistor	110000-103
R84	560 Ω, ±5%, ¼ W Resistor	110000-561
R85-R87	7.5 kΩ, ±1%, ⅛ W Resistor	110003-752
R88	200 Ω Horizontal Potentiometer	119002-201
R89	7.5 kΩ, ±1%, ⅛ W Resistor	110003-752
R90	100 Ω, ±1%, ⅛ W Resistor	110000-101
R91	7.5 kΩ, ±1%, ⅛ W Resistor	110003-752
R92	200 Ω Horizontal Potentiometer	119002-201
R93	7.5 kΩ, ±1%, ⅛ W Resistor	110003-752

(Continued on next page)

Quantum Game Printed-Circuit Board Assembly, continued
Parts List

Designator	*Description*	*Part No.*
R94	100 Ω, ±1%, ⅛ W Resistor	110000-101
R95, R96	7.5 kΩ, ±1%, ⅛ W Resistor	110003-752
R97	3.9 kΩ, ±5%, ¼ W Resistor	110000-392
R106	7.5 kΩ, ±1%, ⅛ W Resistor	110003-752
R108	270 kΩ, ±5%, ½ W Resistor	110000-271
R110–R117	3.3 kΩ, ±5%, ¼ W Resistor	110000-332
R118	10 kΩ, ±5%, ¼ W Resistor	110000-103
R119	1 kΩ, ±5%, ¼ W Resistor	110000-102
R120–R128	10 kΩ, ±5%, ¼ W Resistor	110000-103
R129	1 kΩ, ±5%, ¼ W Resistor	110000-102
R130	1.8 kΩ, ±5%, ¼ W Resistor	110000-182
R131	2.2 kΩ, ±5%, ¼ W Resistor	110000-222
R132	1.8 kΩ, ±5%, ¼ W Resistor	110000-182
R133	2.2 kΩ, ±5%, ¼ W Resistor	110000-222
R134	3.3 kΩ, ±5%, ¼ W Resistor	110000-332
R135	2.2 kΩ, ±5%, ¼ W Resistor	110000-222
R136	6.8 kΩ, ±5%, ¼ W Resistor	110000-682
R137–R139	470 Ω, ±5%, ¼ W Resistor	110000-471
R140	1.2 kΩ, ±5%, ¼ W Resistor	110000-122
R141	2.2 kΩ, ±5%, ¼ W Resistor	110000-222
R142	4.7 kΩ, ±5%, ¼ W Resistor	110000-472
R143	10 kΩ, ±5%, ¼ W Resistor	110000-103
R144	22 kΩ, ±5%, ¼ W Resistor	110000-223
R145	3.3 kΩ, ±5%, ¼ W Resistor	110000-332
R146	510 Ω, ±5%, ¼ W Resistor	110000-511
R147, R148	1 kΩ, ±5%, ¼ W Resistor	110000-102
R149	470 Ω, ±5%, ¼ W Resistor	110000-471
R151–R152	470 Ω, ±5%, ¼ W Resistor	110000-471
R153	1 kΩ, ±5%, ¼ W Resistor	110000-102
R155–R159	1 kΩ, ±5%, ¼ W Resistor	110000-102
R160–R162	470 Ω, ±5%, ¼ W Resistor	110000-471
R163	10 kΩ, ±5%, ¼ W Resistor	110000-103
R164, R165	220 Ω, ±5%, ¼ W Resistor	110000-221
R166–R172	1 kΩ, ±5%, ¼ W Resistor	110000-102
R173	10 kΩ, ±5%, ¼ W Resistor	110000-103
R174	68 kΩ, ±5%, ¼ W Resistor	110000-683
R175	15 kΩ, ±5%, ¼ W Resistor	110000-153
R176	1 kΩ, ±5%, ¼ W Resistor	110000-102
R177, R178	10 kΩ, ±5%, ¼ W Resistor	110000-103
R179	220 Ω, ±5%, ¼ W Resistor	110000-221
R180–R187	100 kΩ, ±5%, ¼ W Resistor	110000-104
R188–R203	4.7 kΩ, ±5%, ¼ W Resistor	110000-472
R204	290 kΩ, ±5%, ¼ W Resistor	110000-224
R205	1 kΩ, ±5%, ¼ W Resistor	110000-102

(Continued on next page)

Quantum Game Printed-Circuit Board Assembly, continued
Parts List

Designator	*Description*	*Part No.*
R206–R209	290 kΩ, ±5%, ¼ W Resistor	110000-224
R210	1 kΩ, ±5%, ¼ W Resistor	110000-102
R211–R213	220 kΩ, ±5%, ¼ W Resistor	110000-224
R214	150 Ω, ±5%, ⅛ W Resistor	110000-151
R215	10 kΩ, ±5%, ¼ W Resistor	110000-103
R216, R217	4.7 kΩ, ±5%, ¼ W Resistor	110000-472
R218–R222	1 kΩ, ±5%, ¼ W Resistor	110000-102
R223	220 Ω, ±5%, ¼ W Resistor	110000-221
R224–R226	100 Ω, ±5%, ⅛ W Resistor	110000-101
RV1, RV2	8 V Variable Resistor	110004-001
	Sockets	
1K/L	64-Contact Medium-Insertion-Force Integrated Circuit Socket	79-42C64
2/3B, 2/3D	40-Contact Medium-Insertion-Force Integrated Circuit Socket	79-42C40
2E, 2F	28-Contact Medium-Insertion-Force Integrated Circuit Socket	79-42C28
2H/J	28-Contact Medium-Insertion-Force Integrated Circuit Socket	79-42C28
2K, 2L	28-Contact Medium-Insertion-Force Integrated Circuit Socket	79-42C28
2M, 2N	24-Contact Medium-Insertion-Force Integrated Circuit Socket	79-42C24
3E, 3F	28-Contact Medium-Insertion-Force Integrated Circuit Socket	79-42C28
3H/J	28-Contact Medium-Insertion-Force Integrated Circuit Socket	79-42C28
3K, 3L	28-Contact Medium-Insertion-Force Integrated Circuit Socket	79-42C28
3M, 3N	24-Contact Medium-Insertion-Force Integrated Circuit Socket	79-42C24
5D, 5E	24-Contact Medium-Insertion-Force Integrated Circuit Socket	79-42C24
6B	40-Contact Medium-Insertion-Force Integrated Circuit Socket	79-42C40
6D, 6E	24-Contact Medium-Insertion-Force Integrated Circuit Socket	79-42C24
	Transistors	
Q7	Type-2N3904, 350 mW, 60 V NPN Transistor	34-2N3904
Q8	Type-2N3906, 1 W, 40 V PNP Transistor	33-2N3906
Q9–Q11	Type-2N3904, 350 mW, 60 V NPN Transistor	34-2N3904
Q12	Type-2N3906, 1 W, 40 V PNP Transistor	33-2N3906
Q13, Q14	Type-2N3904, 350 mW, 60 V NPN Transistor	34-2N3904
Q15, Q16	Type-2N6044, 8 A, 80 V NPN Transistor	34-2N6044
Q17	Type-2N3904, 350 mW, 60 V NPN Transistor	34-2N3904

NOTICE TO ALL PERSONS RECEIVING THIS DRAWING
CONFIDENTIAL: Reproduction forbidden without the specific written permission of Atari, Inc., Sunnyvale, CA. This drawing is only conditionally issued, and neither receipt nor possession thereof confers or transfers any right in, or license to use, the subject matter of the drawing or any design or technical information shown thereon, nor any right to reproduce this drawing or any part thereof. Except for manufacture by vendors of Atari, Inc., and for manufacture under the corporation's written license, no right to reproduce this drawing is granted or the subject matter thereof unless by written agreement with or written permission from the corporation

Acceptable substitute is part no. A035435-02.

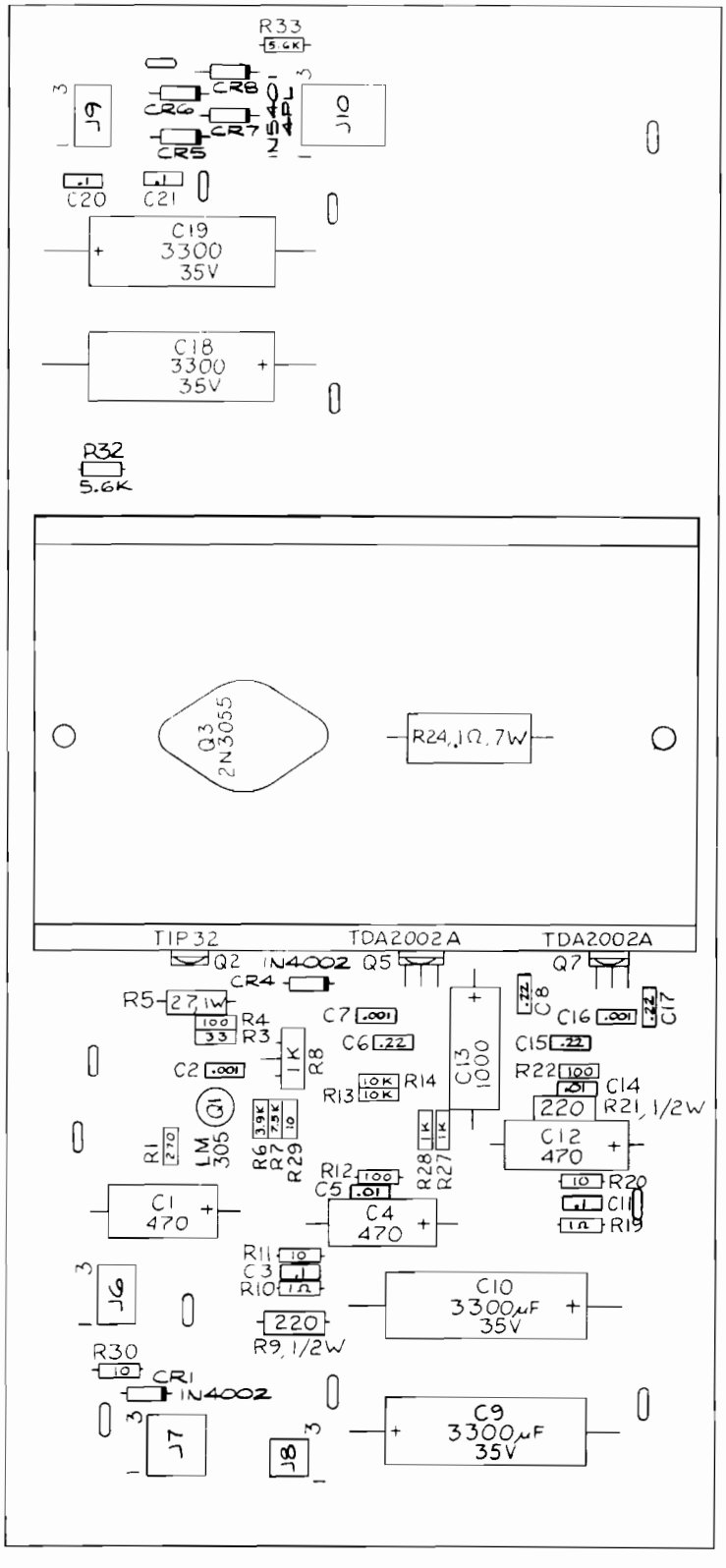

Figure 4-13 Regulator/Audio II PCB Assembly A035435-04 C

Regulator/Audio II Printed-Circuit Board Assembly Parts List

Designator	*Description*	*Part No.*
	Capacitors	
C1	470 μF, 25 V, Aluminum Electrolytic Fixed Axial-Lead Capacitor	24-250477
C2	0.001 μF, 50 V, Ceramic-Disc Axial-Lead Capacitor	122002-102
C3	0.1 μF, 50 V, Ceramic-Disc Axial-Lead Capacitor	122002-104
C4	470 μF, 25 V, Aluminum Electrolytic Fixed Axial-Lead Capacitor	24-250477
C5	0.01 μF, 25 V Minimum, Ceramic-Disc Axial-Lead Capacitor *Acceptable substitute is part no. 122005-103*	100015-103
C6	0.22 μF, 25 V, Ceramic-Disc Axial-Lead Capacitor	122004-224
C7	0.001 μF, 50 V, Ceramic-Disc Axial-Lead Capacitor	122002-102
C8	0.22 μF, 25 V, Ceramic-Disc Axial-Lead Capacitor	122004-224
C9, C10	3300 μF, 35 V, Aluminum Electrolytic Fixed Axial-Lead Capacitor	24-350338
C11	0.1 μF, 50 V, Ceramic-Disc Axial-Lead Capacitor	122002-104
C12	470 μF, 25 V, Aluminum Electrolytic Fixed Axial-Lead Capacitor	24-250477
C13	1000 μF, 25 V, Aluminum Electrolytic Fixed Axial-Lead Capacitor	24-250108
C14	0.01 μF, 25 V Minimum, Ceramic-Disc Axial-Lead Capacitor *Acceptable substitute is part no. 122005-103*	100015-103
C15	0.22 μF, 25 V, Ceramic-Disc Axial-Lead Capacitor	122004-224
C16	0.001 μF, 50 V, Ceramic-Disc Axial-Lead Capacitor	122002-102
C17	0.22 μF, 25 V, Ceramic-Disc Axial-Lead Capacitor	122004-224
C18, C19	3300 μF, 35 V, Aluminum Electrolytic Fixed Axial-Lead Capacitor	24-350338
C20, C21	0.1 μF, 50 V, Ceramic-Disc Axial-Lead Capacitor	122002-104
	Diodes	
CR1, C4	Type-1N4002, 1 A, 100 V Silicon Rectifier Diode	31-1N4002
CR5–CR8	Type-1N5401, 3 A, 100 V Silicon Rectifier Diode	31-1N5401
	Integrated Circuits	
Q1	Type-LM305, 5 V, Linear Voltage Regulator	37-LM305
Q5	Type-TDA2002A, 8 W, Linear Audio Amplifier Integrated Circuit	137151-002
Q7	Type-TDA2002A, 8 W, Linear Audio Amplifier Integrated Circuit	137151-002
	Resistors	
R1	270 Ω, ±5%, ¼ W Resistor	110000-271
R3	33 Ω, ±5%, ¼ W Resistor	110000-330
R4	100 Ω, ±5%, ¼ W Resistor	110000-101
R5	2.7 Ω, ±5%, 1 W Resistor	110009-027
R6	3.9 kΩ, ±5%, ¼ W Resistor	110000-392
R7	7.5 kΩ, ±5%, ¼ W Resistor	110000-752
R8	1 kΩ Horizontal PCB-Mounting Cermet Potentiometer *Acceptable substitute is part no. 19-315102*	119002-102
R9	220 Ω, ±5%, ½ W Resistor	110001-221
R10	1 Ω, ±5%, ¼ W Resistor	110000-010
R11	10 Ω, ±5%, ¼ W Resistor	110000-100
R12	100 Ω, ±5%, ¼ W Resistor	110000-101
R13, R14	10 kΩ, ±5%, ¼ W Resistor	110000-103

(Continued on next page)

Regulator/Audio II PCB Assembly
Parts List, continued

Designator	*Description*	*Part No.*
R19	1 Ω, ±5%, ¼ W Resistor	110000-010
R20	10 Ω, ±5%, ¼ W Resistor	110000-100
R21	220 Ω, ±5%, ½ W Resistor	110001-221
R22	100 Ω, ±5%, ¼ W Resistor	110000-101
R24	0.1 Ω, ±3%, 7 W Wirewound Resistor	19-100P1015
R27, R28	1 kΩ, ±5%, ¼ W Resistor	110000-102
R29, R30	10 Ω, ±5%, ¼ W Resistor	110000-100
R32, R33	5.6 kΩ, ±5%, ¼ W Resistor	110000-562
	Transistors	
Q2	Type-TIP32 PNP Power Transistor	33-TIP32
Q3	Type-2N3055 NPN Silicon Transistor	34-2N3055
	Mechanical Parts	
J6	6-Position Connector Receptacle	79-58306
J7	9-Position Connector Receptacle	79-58308
J8	4-Position Connector Receptacle	79-58354
J9	6-Position Connector Receptacle	79-58306
J10	12-Position Connector Receptacle	79-58346
Q2	#6-32 x ¼-Inch Binder-Head Nylon Screw	75-F60405
Q3	#6-32 Nut/Washer Assembly	75-99516
Q3	Thermally Conductive Silicon Insulator	78-16008
Q5	Thermally Conductive Silicon Insulator	78-16008
Q5, Q7	#6 x ⅜-Inch Cross-Recessed Pan-Head Thread-Forming Type-AB Zinc-Plated-Steel Screw	72-6606S
	Heat Sink	034531-01
	Test Point *Acceptable substitute is part no. 020670-01*	179051-001

I. Color X-Y Power Supply Assembly

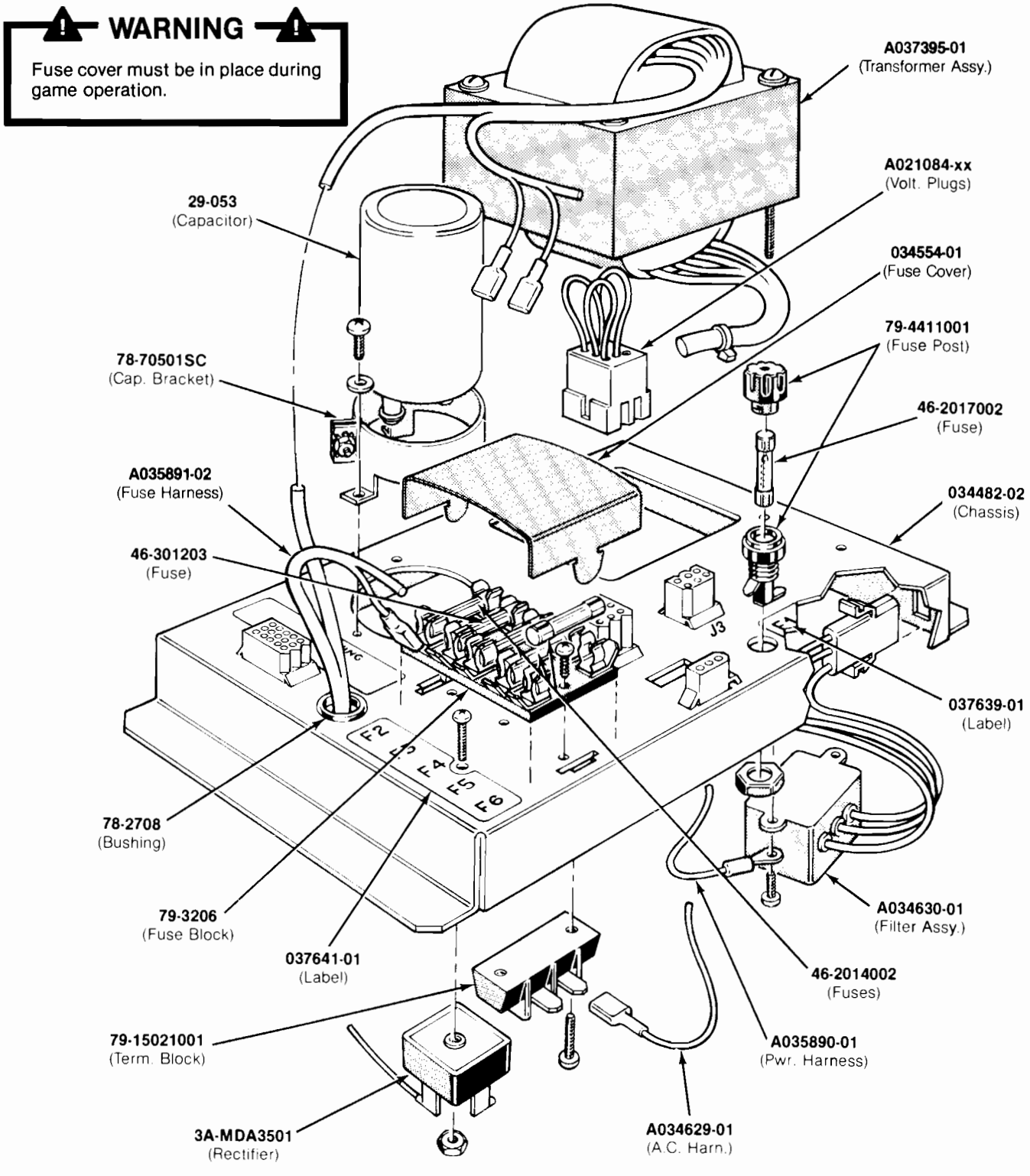

Figure 4-14 Color X-Y Power Supply Assembly A037396-xx D

Color X-Y Power Supply Assembly
Parts List

Part No.	*Description (Reference Designations in Bold)*
A021084-01	Voltage Plug for 100 V *(violet)*
A021084-02	Voltage Plug for 120 V *(yellow)*
A021084-04	Voltage Plug for 220 V *(blue)*
A021084-05	Voltage Plug for 240 V *(brown)*
A034629-01	AC Harness Assembly
A034630-01	RFI Filter Assembly **(FL1)**
A035890-01	Power Harness Assembly
A035891-02	Fuse Harness Assembly
A037395-01	Color X-Y Transformer Assembly **(T1)**
29-053	27,000 μF 15 VDC Electrolytic Capacitor **(C1)**
3A-MDA3501	Type-MDA 3501 Bridge Rectifier **(CR1)**
46-2014002	4 A, 250 V, 3AG Slow-Blow Glass Cartridge-Type Fuse **(F2, F4-F6)**
46-2017002	7 A, 250 V, 3AG Slow-Blow Glass Cartridge-Type Fuse **(F1)**
46-301203	20 A, 32 V, 3AG Slow-Blow Glass Cartridge-Type Fuse **(F3)**
78-2708	Nylon Type 6/6 Hole Bushing with ⅜-Inch Inside Diameter × ⅝₄-Inch Outside Diameter × ¼-Inch Thick
78-70501SC	2-Inch Diameter Capacitor Mounting Bracket
79-15021001	2-Circuit Single-Row Terminal Block
79-3206	5-Position 3AG Fuse Block with ¼-Inch Quick-Disconnect Terminals
79-4411001	Panel-Mounting Non-Indicating 3AG Cartridge-Type Fuse Post
034482-02	Power Supply Chassis Base
034544-01	Fuse Block Cover
037243-01	Metal Base Plate *(not shown in illustration)*
037639-01	Label for Fuse Value **(F1)**
037641-01	Label for Fuse Values **(F2-F6)**

NOTE

A037396-01 power supply assembly has the 120 V plug
A037396-02 has the 100 V, 220 V, and 240 V plugs
A037396-03 has the 220 V and 240 V plugs

Line Voltage Range	Voltage Selection Plug Wire Color
90-110 VAC (100)	Violet
105-135 VAC (120)	Yellow
200-240 VAC (220)	Blue
220-260 VAC (240)	Brown

Glossary of Terms

AC
Alternating current; from zero it rises to a maximum positive level, then passes through zero again to a maximum negative level.

ACTIVE STATE
The true state of a signal. For example: The active state for $\overline{\text{START}}$ is low.

ADDRESS
A value that identifies a specific location of data in memory; normally expressed in hexadecimal notation.

ANALOG
Measurable in an absolute quantity (as opposed to on or off). Analog devices are volume controls, light dimmers, stereo amplifiers, etc.

ANODE
The positive (arrow) end of a diode.

AMPLIFIER
A device used to increase the strength of an applied signal.

AMPLITUDE
The maximum instantaneous value of a waveform pulse from zero.

ASTABLE
Having no normal state. An astable device will free-run or oscillate as long as operating voltage is applied. The oscillation frequency is usually controlled by external circuitry.

AUXILIARY COIN SWITCH
A momentary-contact pushbutton switch with a black cap located on the utility panel. The auxiliary coin switch adds credits to the game without activating the coin counter.

BEZEL
A cut, formed, or machined retention device, such as the conical device used to mount a pushbutton switch to a control panel, or the formed device used to frame the video display screen.

BIDIRECTIONAL
Able to send or receive data on the same line (e.g., the data bus of a microprocessor).

BINARY
A number system that expresses all values by using two digits (0 and 1).

BIT
A binary digit; expressed as a 1 or a 0.

BLANKING
Turning off the beam on a cathode-ray tube during retrace.

BLOCK DIAGRAM
A drawing in which functional circuitry units are represented by blocks. Very useful during initial troubleshooting.

BUFFER
1. An isolating circuit designed to eliminate the reaction of a driven circuit on the circuits driving it (e.g., a buffer amplifier).

2. A device used to supply additional drive capability.

BUS
An electrical path over which information is transferred from any of several sources to any of several destinations.

CAPACITOR
A device capable of storing electrical energy. A capacitor blocks the flow of DC current while allowing AC current to pass.

CATHODE
The negative end of a diode.

CHIP
An integrated circuit comprising many circuits on a single wafer slice.

CLOCK
A repetitive timing signal for synchronizing system functions.

COINCIDENCE
Occurring at the same time.

COIN COUNTER
A 6-digit electro-mechanical device that counts the coins inserted in the coin mechanism(s).

COIN MECHANISM
A device on the inside of the coin door that inspects the coin to determine if the correct coin has been inserted.

COMPLEMENTARY
Having opposite states, such as the outputs of a flip-flop.

COMPOSITE SYNC
Horizontal and vertical synchronization pulses that are bused together into a single signal. This signal provides the timing necessary to keep the display in synchronization with the game circuitry.

COMPOSITE VIDEO
Complete video signal from the game system to drive the display circuitry, usually comprising H SYNC, V SYNC, and the video.

CREDIT
One play for one person based on the game switch settings.

CRT
Cathode-ray tube.

DATA
General term for the numbers, letters, and symbols that serve as input for device processing.

DARLINGTON
A two-transistor amplifier that provides extremely high gain.

DC
Direct current, meaning current flowing in one direction and of a fixed value.

DEFLECTION YOKE
Electro-magnetic coils around the neck of a cathode-ray tube. One set of coils deflects the electron beam horizontally and the other set deflects the beam vertically.

DIAGNOSTICS
A programmed routine for checking circuitry. For example: the self-test is a diagnostic routine.

DIODE
A semiconductor device that conducts in only one direction.

DISCRETE
Non-integrated components, such as resistors, capacitors, and transistors.

DMA
Direct memory access. DMA is a process of accessing memory that bypasses the microprocessor logic. DMA is normally used for transferring data between the input/output ports and memory.

DOWN TIME
The period during which a game is malfunctioning or not operating correctly due to machine failure.

EAROM
Electrically alterable read-only memory (see ROM). The EAROM is a memory that can be changed by the application of high voltage.

FLYBACK
A step-up transformer used in a display to provide the high voltage.

GATE
1. A circuit with one output that responds when and only when a certain combination of pulses is present at the inputs.

2. A circuit in which one signal switches another signal on and off.

3. To control the passage of a pulse or signal.

HARNESS
A prefabricated assembly of insulated wires and terminals ready to be attached to a piece of equipment.

HEXADECIMAL
A number system using the equivalent of the decimal number 16 as a base. The symbols 0–9 and A–F are usually used.

IMPLODE
To burst inward; the inward collapse of a vacuum tube.

I/O
Input/Output.

IRQ
Interrupt request. IRQ is a control signal to the microprocessor that is generated by external logic. This signal tells the microprocessor that external logic needs attention. Depending on the program, the processor may or may not respond.

LED
The abbreviation for a light-emitting diode.

LOCKOUT COIL
Directs coins into the coin return box when there is no power to the game.

LOGIC STATE
The binary (1 or 0) value at the node of a logic element or integrated circuit during a particular time. Also called the logic level. The list below shows the voltage levels corresponding to the logic states (levels) in a TTL system.

Logic 0, Low = 0 VDC to +0.8 VDC
Grey Area (Tri-State Level) = +0.8 VDC to +2.4 VDC
Logic 1, High = +2.4 VDC to +5 VDC

MULTIPLEXER
A device that takes several low-speed inputs and combines them into one high-speed data stream for simultaneous transmission on a single line.

NMI
Non-maskable interrupt. NMI is a request for service by the microprocessor from external logic. The microprocessor cannot ignore this interrupt request.

PAGE
A subsection of memory. A read-only memory device (see ROM) is broken into discrete blocks of data. These blocks are called pages. Each block has X number of bytes.

PCB
The abbreviation for a printed-circuit board.

PHOTOTRANSISTOR
A transistor that is activated by an external light source.

POTENTIOMETER
1. A resistor that has a continuously moving contact which is generally mounted on a moving shaft. Used chiefly as a voltage divider. Also called a *pot* (slang).

2. An instrument for measuring a voltage by balancing it against a known voltage.

RAM
Random-access memory. A device for the temporary storage of data.

RASTER-SCAN DISPLAY
A display system whereby images are displayed by continuously scanning the cathode-ray tube horizontally and vertically with an electron beam. The display system controls the intensity of the electron beam.

RETRACE
In a raster-scan display, retrace is the time during which the cathode-ray tube electron beam is resetting either from right to left or from bottom to top.

RESISTOR
A device designed to have a definite amount of resistance. Used in circuits to limit current flow or to provide a voltage drop.

ROM
Read-only memory. A device for the permanent storage of data.

SIGNATURE ANALYSIS
A process of isolating digital logic faults at the component level by means of special test equipment called signature analyzers. Basically, signature analyzers (e.g., the ATARI® CAT Box) convert lengthy bit streams into four-digit hexadecimal signatures. The signature read by the analyzer at each circuit node is then compared with the known good signature for that node. This process continues until a fault is located.

TROUBLESHOOT
The process of locating and repairing a fault.

VECTOR
A line segment drawn between specific X and Y coordinates on a cathode-ray tube.

WATCHDOG
A counter circuit designed to protect the microprocessor from self-destruction if a program malfunction occurs. If a malfunction does occur, the counter applies continuous pulses to the reset line of the microprocessor, which causes the microprocessor to keep resetting.

X-Y DISPLAY
A display system whereby images are displayed with vectors.

ZENER DIODE
A special diode used as a regulator. Its main characteristic is breaking down at a specified reverse-bias (Zener) voltage.

YOUR COMMENTS, PLEASE!

Your comments will assist Atari in improving our publications. The comments are an important part of preparing for revisions of game manuals. Please write in the space below. No postage stamp is necessary if mailed in the U.S.A.

If you have any technical questions about certain ATARI games products, or are requesting additional publications, we will immediately forward your note to the appropriate person.

Page: Comments:

Fill in if you wish a reply:

Name_____

Firm _____ ☐ Distributor

Address _____ ☐ Operator

City _____ State _____ Zip _____ ☐ Other _____

Area Code _____ Phone _____

First fold

No Postage
Necessary
if mailed in
the United States

BUSINESS REPLY MAIL

FIRST CLASS PERMIT NO. 1004 SUNNYVALE, CA

POSTAGE WILL BE PAID BY ADDRESSEE

Atari, Inc.
Attn.: Field Service/Coin-Op Division
P. O. Box 427
Sunnyvale, California 94086

Second fold

From:

NOTES

NOTES

Warranty

Seller warrants that its printed-circuit boards and parts thereon are free from defects in material and workmanship under normal use and service for a period of ninety (90) days from date of shipment. Seller warrants that its video displays (in games supplied with displays) are free from defects in material and workmanship under normal use and service for a period of thirty (30) days from date of shipment. None of the Seller's other products or parts thereof are warranted.

If the products described in this manual fail to conform to this warranty, Sellers' sole liability shall be, at its option, to repair, replace, or credit Buyer's account for such products which are returned to Seller during said warranty period, provided:

(a) Seller is promptly notified in writing upon discovery by Buyer that said products are defective;

(b) Such products are returned prepaid to Sellers' plant; and

(c) Seller's examination of said products discloses to Seller's satisfaction that such alleged defects existed and were not caused by accident, misuse, neglect, alteration, improper repair, installation or improper testing.

In no event shall Seller be liable for loss of profits, loss of use, incidental or consequential damages.

Except for any express warranty set forth in a written contract between Seller and Buyer which contract supersedes the terms of this order, this warranty is expressed in lieu of all other warranties expressed or implied, including the implied warranties of merchantability and fitness for a particular purpose, and of all other obligations or liabilities on the Seller's part, and it neither assumes nor authorizes any other person to assume for the Seller any other liabilities in connection with the sale of products under this order.

The use of any non-Atari parts may void your warranty, according to the terms of the warranty. The use of any non-Atari parts may also adversely affect the safety of your game and cause injury to yourself and others. Be very cautious in using non-Atari-supplied components with our games, in order to insure your safety.

Atari distributors are independent, being privately owned and operated. In their judgment they may sell parts or accessories other than Atari parts or accessories. Atari cannot be responsible for the quality, suitability or safety of any non-Atari part or any modification including labor which is performed by such distributor.

This document is and contains confidential trade secret information of Atari, Inc.

This document is loaned under confidential custody for the sole purpose of operation, maintenance or repair of Atari equipment and may not be used by or disclosed to any person for any other purpose whatever, and remains the property of Atari, Inc.

Neither it nor the information it contains may be reproduced, used, or disclosed to persons not having a need to know consistent with the purpose of the loan, without written consent of Atari, Inc.



ATARI, INC.
790 SYCAMORE DRIVE
P.O. BOX 906
MILPITAS, CALIFORNIA 95035
408/942-3100 • TELEX 35-7488

A Warner Communications Company