
SEGA
QUARTET

SEGA QUARTET

HOW-TO-PLAY

SAVE THE SPACE COLONY 06 !

- Destroy the enemy's boss, capture the KEY and advance to the next stage through the EXIT When stunned you will drop the KEY.
- Everytime the POWER BALL is hit , it changes into the next of the four consecutive colors. Capturing a POWER BALL that matches the color of the player changes your weapon, while the capture of a different colored one will earn you BONUS POINTS.
- When the POWER becomes zero and the player is defeated, the game is over.
- To lie down and crawl.



1. 1~4 players can play simultaneously.
2. The player(s) can participate in this game at anytime.
3. POWER can be increased by inserting up to a maximum of 9 coins.

©SEGA 1986

1PLAYER...25¢

1ST PRINTING – MY

SEGA®

QUARTET

OWNER'S MANUAL



SEGA ENTERPRISES, LTD.

MANUAL NO. 420–5288

TABLE OF CONTENTS

INTRODUCTION OF THE OWNER'S MANUAL 1

1. HANDLING PRECAUTIONS 1
2. PREVENTION OF COUNTERFEITING AND CONVERSION 2
3. PRECAUTIONS CONCERNING THE PLACE OF INSTALLATION... 3
4. PARTS NAME 4
5. OPERATION OF THE SERVICE SWITCHES (#1 & #2 PLAYER) ... 5
6. OPERATION OF THE SERVICE SWITCHES (#3 & #4 PLAYER) ... 6
7. REMOVING THE WINDOW GLASS AND CONTROL PANEL 7
8. ROM LOCATIONS 8
9. DIP SWITCH ADJUSTMENTS 9
10. TESTING ..... 10~13
11. PARTS CATALOG ..... 14~25
12. SCHEMATIC DIAGRAM 26

SPECIFICATIONS

INSTALLATION SPACE	: 29.9 in., 76 cm × 36.6 in., 93 cm
HEIGHT	: 70.3 in., 178.5 cm
POWER	: 160 W
CRT	: 20 in., color
WEIGHT	: 297.6 lbs. 135 kg

NOTE

o Descriptions herein contained may be subject to improvement changes without notice.

INTRODUCTION OF THE OWNER'S MANUAL

SEGA ENTERPRISES, LTD., supported by its high electronic technology of LSIs, microprocessors, etc. and a wealth of experience, has for more than 30 years been supplying various innovative and popular game machines to the world market. This OWNER'S manual is intended to provide detailed comments together with all the necessary information covering the operation in general of electronic assemblies, electromechanicals, servicing control, spare parts, etc. as regards to the QUARTET a new SEGA product. The manual is intended for those who have knowledge of electricity and technical expertise especially in ICs, CRTs, microprocessors, etc. Carefully read so as to acquire sufficient knowledge before working on the machine. Should there be a malfunction, non-technical personnel should under no circumstance touch the interior system.

1. HANDLING PRECAUTIONS

When installing or inspecting, be very careful of the following points and pay attention to ensure that the player can enjoy the game safely.

- o Be sure to turn the power off before working on the machine.
- o To insert or pull out the plug quickly is dangerous.
- o It is necessary to make sure that the power cord or the grounding wire is not exposed on the road, etc. in a manner so as to be dangerous. Make sure that grounding connections are made safely at the position where so specified.
- o Do not use any fuse that does not meet the specified rating.
- o Make complete connections for the IC board and other connectors. Insufficient insertion is very dangerous.

Also, for the IC board circuit inspections, only the logic tone is allowed. The use of a tester is not permitted, so be careful in this regard. After confirming that there are no irregularities, turn the power ON.

2. PREVENTION OF COUNTERFEITING AND CONVERSION

LABELLING

To prevent counterfeits and conversions, the following labels are put on all the SEGA products. When handling such goods, be sure to confirm the labels. They are used to prevent illegal acts such as the unauthorized copying of the products and the printed circuit boards thereof or carrying on business by manufacturing similar merchandise or by converting, selling or using such products or printed circuit boards.

ORIGINAL SEAL

The following seal is put on the machines manufactured by SEGA.

LICENSE SEAL

The following seal is put on the kits, such as the printed circuit boards, of SEGA products.





COPYRIGHT NOTICE

This SEGA product has the copyright notice as follows:

© SEGA 1986

This signifies that this work was disclosed in 1986 and is the property of SEGA ENTERPRISES, LTD.

3. PRECAUTIONS CONCERNING THE PLACE OF INSTALLATION

The QUARTET is an indoor game machine. Absolutely do not install it outside. Even indoors, avoid installing in places mentioned below so as to ensure proper usage:

- o Places subject to rain or water leakage, or condensation due to humidity.
- o In the proximity of an indoor swimming pool and/or shower.
- o Places subject to direct sunlight.
- o Places subject to heat sources from heating units, etc., or hot air.
- o Vicinity of highly inflammable/volatile chemicals or hazardous matter.
- o Sloped surfaces.
- o Vicinity of anti-disaster facilities such us fire exits and fire extinguishers.
- o Places subject to any type of violent impact.
- o Dusty places.

WARNING

This equipment generates, uses, and can radiate radio frequency energy and if not installed and used in accordance with the instructions manual, may cause interference to radio communications. It has been tested and found to comply with the limits for a Class A computing device pursuant to Subpart J of Part 15 of F.C.C. Rules, which are designed to provide reasonable protection against such interference when operated in a commercial environment. Operation of this equipment in a residential area is likely to cause interference in which case the user at his own expense will be required to take whatever measures may be required to correct this interference.

4. PARTS NAME

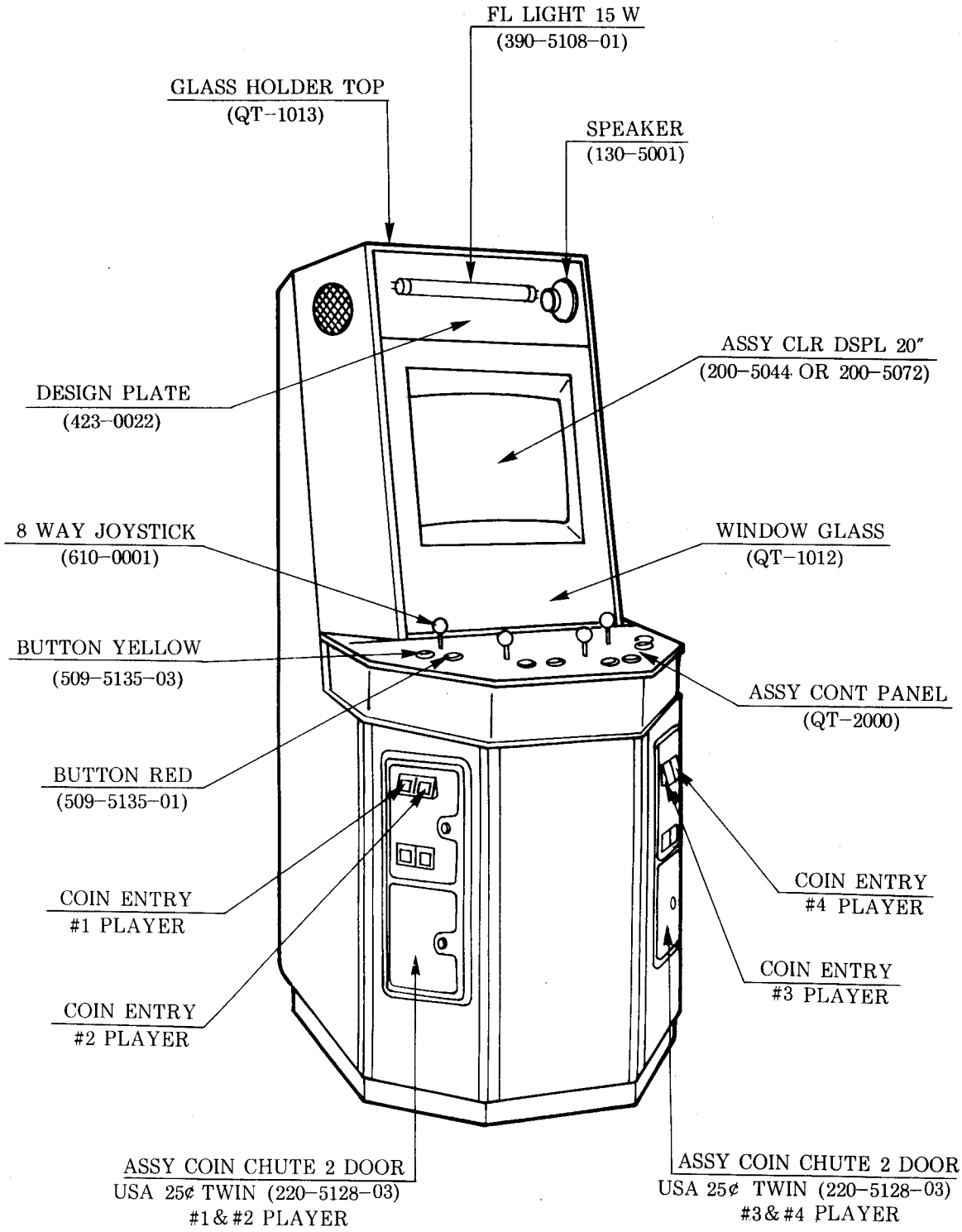
FL LIGHT 15 W
(390-5108-01)
GLASS HOLDER TOP
(QT-1013)
SPEAKER
(130-5001)
ASSY CLR DSPL 20"
(200-5044 OR 200-5072)
DESIGN PLATE
(423-0022)
8 WAY JOYSTICK
(610-0001)
WINDOW GLASS
(QT-1012)
BUTTON YELLOW
(509-5135-03)
ASSY CONT PANEL
(QT-2000)
BUTTON RED
(509-5135-01)
COIN ENTRY
#4 PLAYER
COIN ENTRY
#1 PLAYER
COIN ENTRY
#3 PLAYER
COIN ENTRY
#2 PLAYER
ASSY COIN CHUTE 2 DOOR
USA 25¢ TWIN (220-5128-03)
#1&#2 PLAYER
ASSY COIN CHUTE 2 DOOR
USA 25¢ TWIN (220-5128-03)
#3&#4 PLAYER

5. OPERATION OF THE SERVICE SWITCHES (#1 & #2 PLAYER)

o Open the coin chute door to find the switches' layout as shown below:

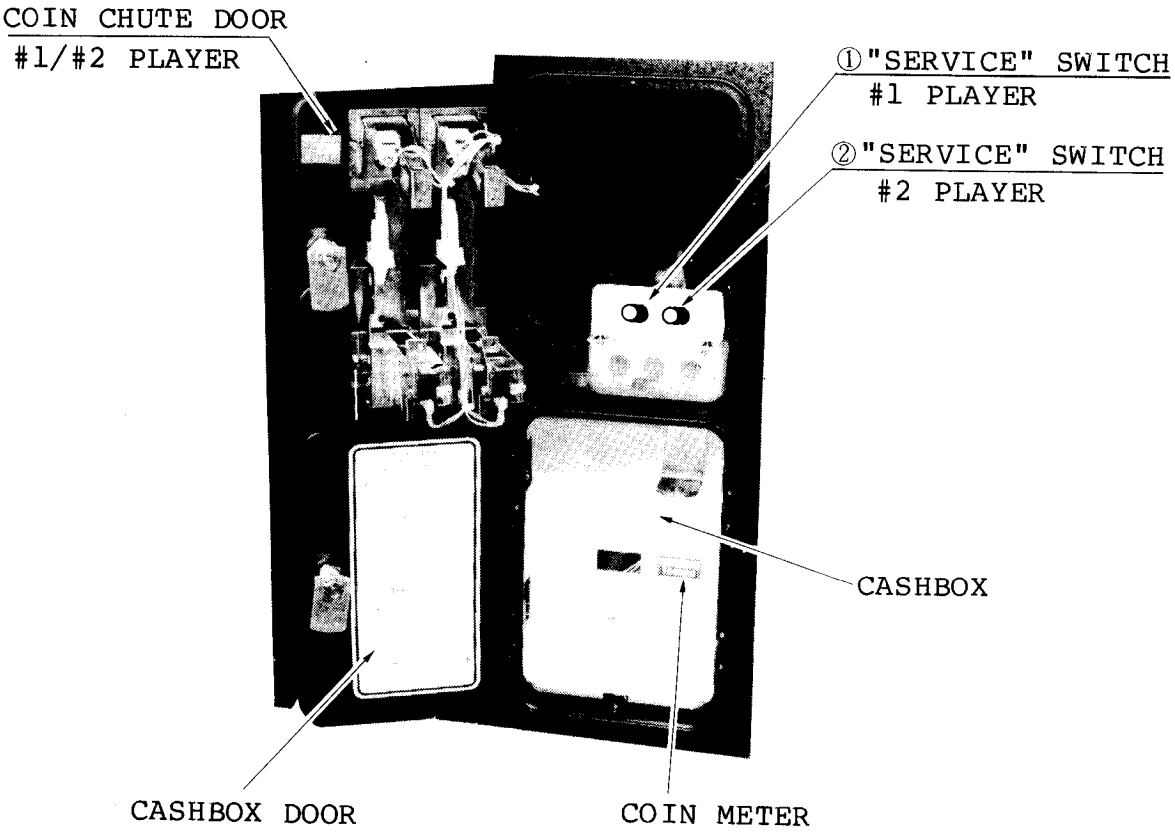

OPERATING INSTRUCTIONS

①② "SERVICE" SWITCH ..... To be used for "SERVICE" purposes
#1/#2 PLAYER when checking the game, with the CREDIT increasing but not registering on the coin meter.

6. OPERATION OF THE SERVICE SWITCHES (#3 & #4 PLAYER)

o Open the coin chute door to find the switches' layout as shown below:

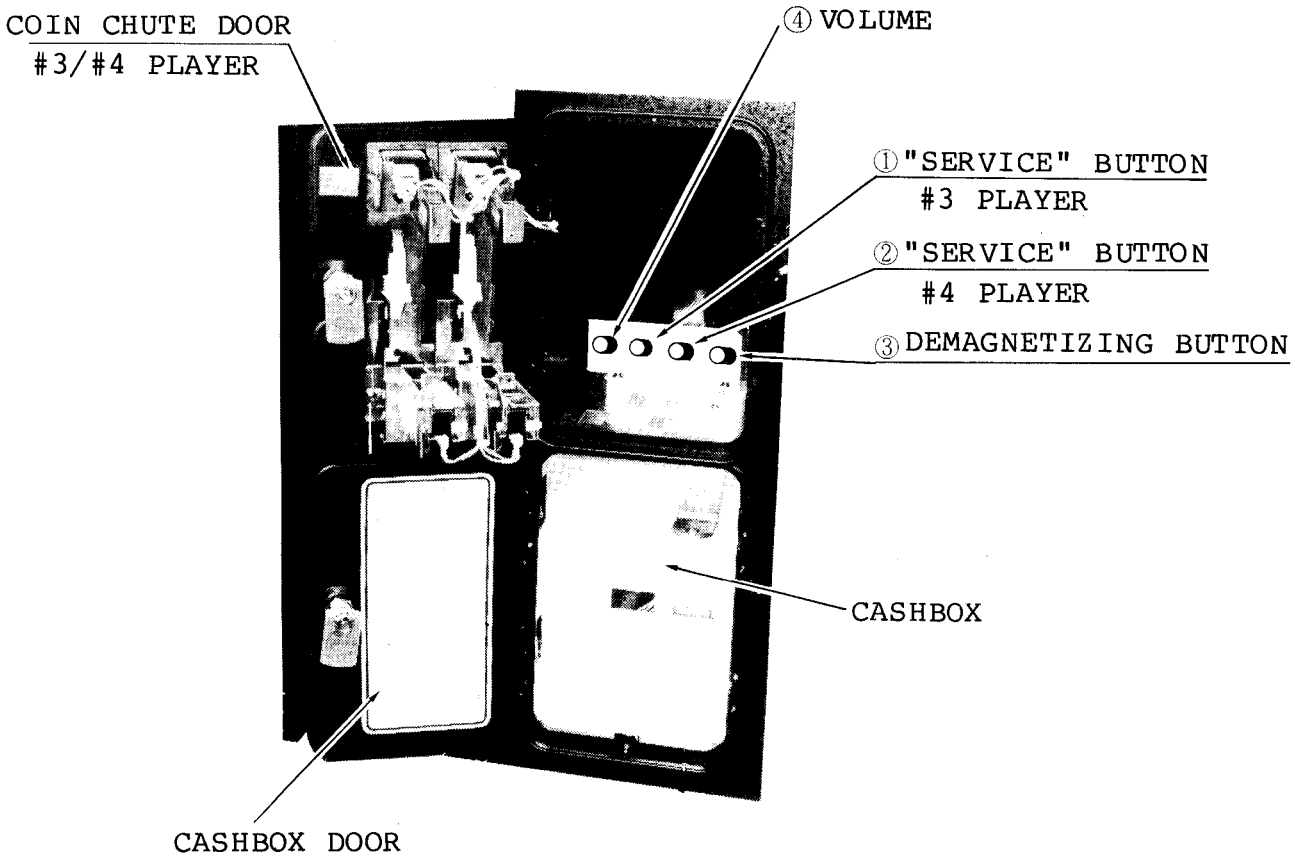

OPERATING INSTRUCTIONS

①② "SERVICE" BUTTON ..... To be used for "SERVICE" purposes when checking the game, with the CREDIT increasing but not registering on the coin meter.
#3/#4 PLAYER

③ DEMAGNETIZING BUTTON ..... To remove the color unevenness of the on-screen images.

④ SOUND VOLUME CONTROL ..... To control the speaker's sound volume.

7. REMOVING THE WINDOW GLASS AND CONTROL PANEL

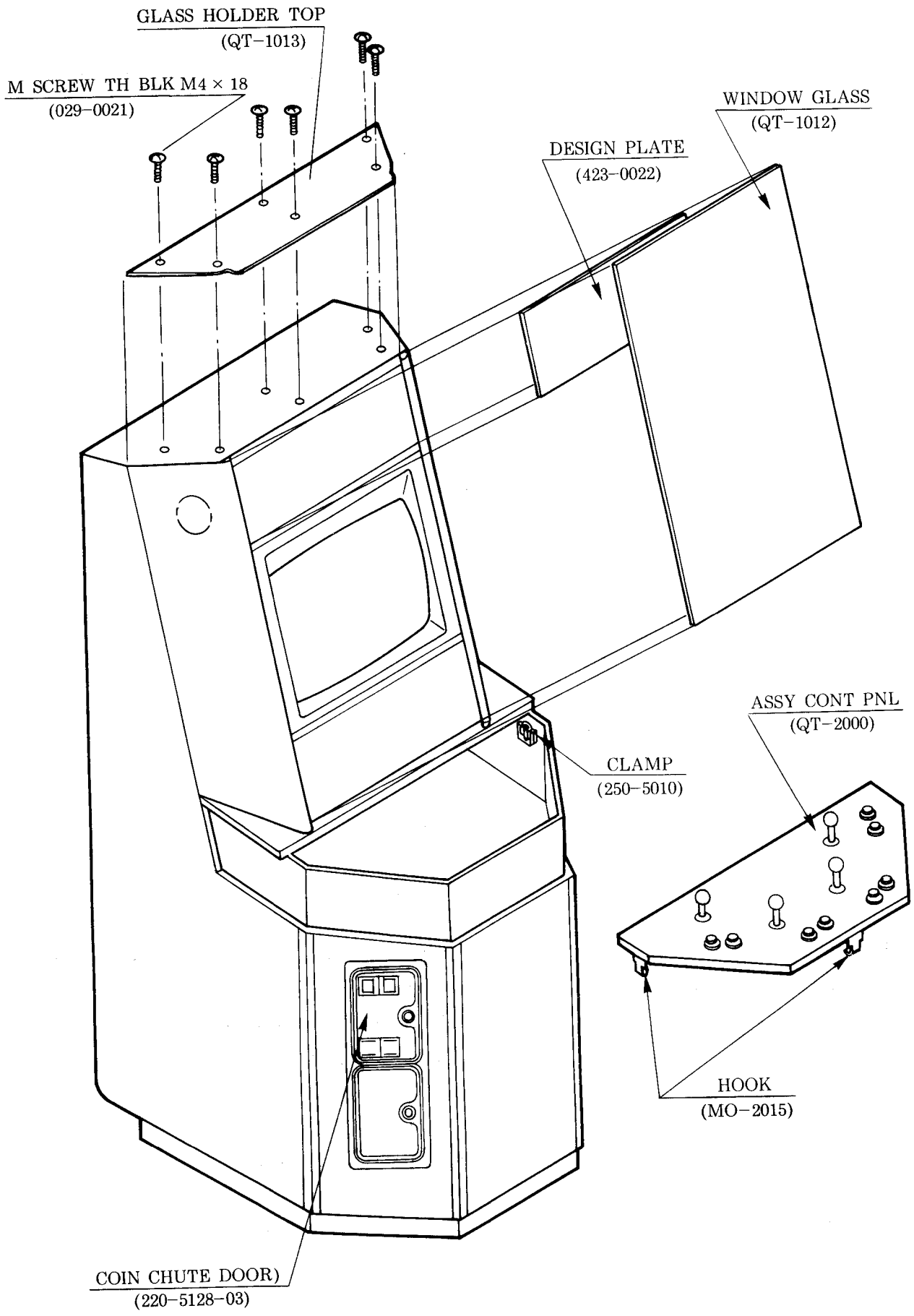

8. ROM LOCATIONS

833-5973 GAME BOARD

MAIN BD QUARTET

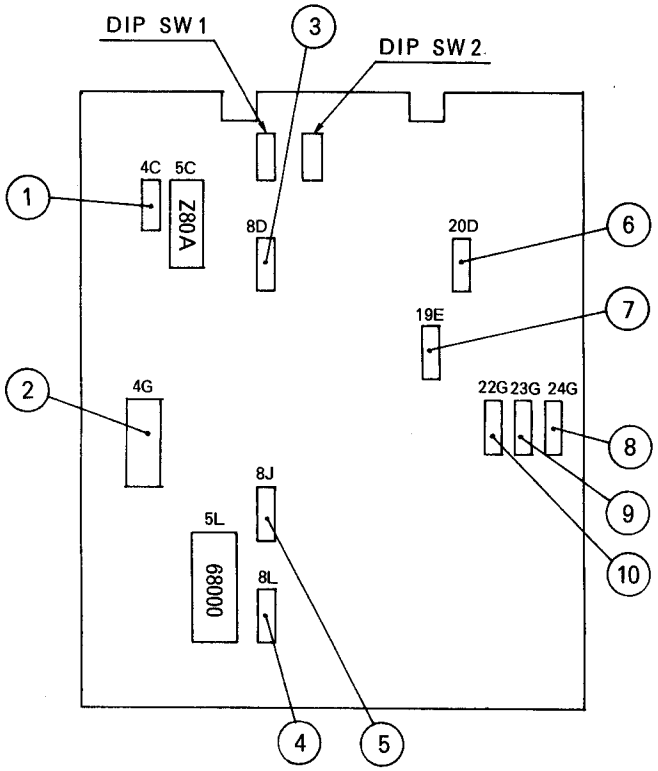

837-5795

ROM BD QUARTET

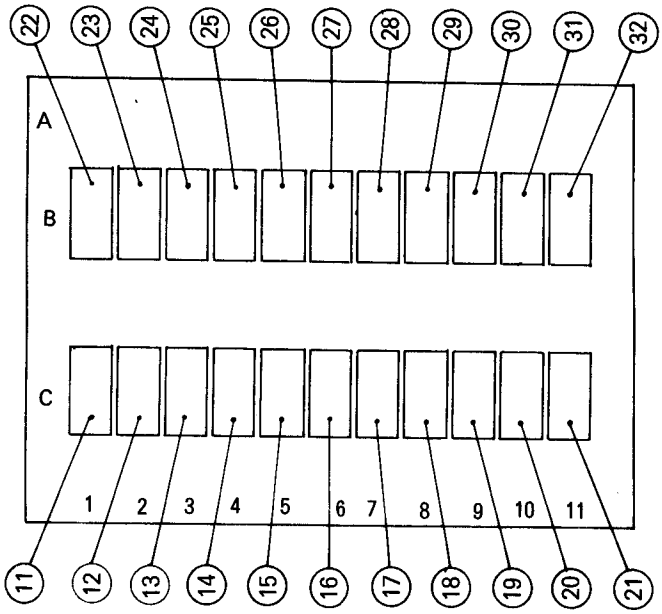

837-5794

	LOCATION	NUMBERS	FUNCTIONS	
1	4C	315-5141	SECURITY CHIP	837-5975 MAIN BD QUARTET
2	4G	315-5194		
3	8D	315-5144		
4	8L	315-5202		
5	8J	315-5193		
6	20D	315-5149		
7	19E	315-5108		
8	24G	315-5143		
9	23G	315-5147		
10	22G	315-5107		
11	1C	EPR-7473		834-5794 ROM BD QUARTET
12	2C	EPR-7475		
13	3C	EPR-7474		
14	4C	EPR-7476		
15	5C	EPR-7465		
16	6C	EPR-7466		

	LOCATION	NUMBERS	FUNCTIONS	
17	7C	EPR-7467	OBJ	834-5794 ROM BD QUARTET
18	8C	EPR-7468	OBJ	
19	9C	EPR-7461	FIX	
20	10C	EPR-7462	FIX	
21	11C	EPR-7463	FIX	
22	1B	EPR-7464	SOUND PRGRM	
23	2B	EPR-7469	OBJ	
24	3B	EPR-7470	OBJ	
25	4B	EPR-7471	OBJ	
26	5B	EPR-7472	OBJ	
27	6B	EPR-7455A	MAIN PRGRM	
28	7B	EPR-7465A	MAIN PRGRM	
29	8B	EPR-7457	MAIN PRGRM	
30	9B	EPR-7458A	MAIN PRGRM	
31	10B	EPR-7459A	MAIM PRGRM	
32	11B	EPR-7460	MAIN PRGRM	

9. DIP SWITCH ADJUSTMENTS

COIN/CREDIT OPTIONS SWITCH SETTING — DIP SWITCH # 1

OPTION	1	2	3	4	5	6	7	8
1 COIN 1 CREDIT	OFF	OFF	OFF	OFF	NOT USE (ALL OFF)			
1 COIN 2 CREDITS	ON	OFF	OFF	OFF				
1 COIN 3 CREDITS	OFF	ON	OFF	OFF				
1 COIN 4 CREDITS	ON	ON	OFF	OFF				
1 COIN 5 CREDITS	OFF	OFF	ON	OFF				
1 COIN 6 CREDITS	ON	OFF	ON	OFF				
2 COINS 1 CREDIT	OFF	ON	ON	OFF				
3 COINS 1 CREDIT	ON	ON	ON	OFF				
4 COINS 1 CREDIT	OFF	OFF	OFF	ON				
2 COINS 3 CREDITS	ON	OFF	OFF	ON				
2 COINS 1 CREDIT 4 COINS 2 CREDITS 5 COINS 3 CREDITS 6 COINS 4 CREDITS	OFF	ON	OFF	ON				
2 COINS 1 CREDIT 4 COINS 3 CREDITS	ON	ON	OFF	ON				
1 COIN 1 CREDIT 2 COINS 2 CREDITS 3 COINS 3 CREDITS 4 COINS 4 CREDITS 5 COINS 6 CREDITS	OFF	OFF	ON	ON				
1 COIN 1 CREDIT 2 COINS 2 CREDITS 3 COINS 3 CREDITS 4 COINS 5 CREDITS	ON	OFF	ON	ON				
1 COIN 1 CREDIT 2 COINS 3 CREDITS	OFF	ON	ON	ON				
1 COIN 1 CREDIT	ON	ON	ON	ON				

OPTION SWITCH SETTING — DIP SWITCH #2

OPTION		1	2	3	4	5	6	7	8
ATTRACT SOUND		OFF ON							
1 CREDIT=POWER 1000 1 CREDIT=POWER 500 1 CREDIT=POWER 2000 1 CREDIT=POWER 9000			OFF ON OFF ON	OFF OFF ON ON					
DIFFICULTY LEVEL	MEDIUM EASY HARD HARDEST				OFF ON OFF ON	OFF OFF ON ON			
COINS IN DURING PLAY	POWER						OFF		
	CREDIT						ON		
FREE PLAY								OFF ON	
MODE SELECT	GAME								OFF
	TEST MODE								ON

* For TEST MODE, turn DIP SWITCH #8 ON and then switch the power ON. To return to GAME PLAY condition, turn the #8 DIP SWITCH OFF first and then switch the power ON.

10. TESTING

In this test, check mainly to make sure that the IC board accurately functions, that sound and on-monitor image colors are adjusted, and also that the defective portions are detected.

Test Program

(1) IC TEST : To check ROM/RAM
(2) BUTTON TEST : To check SHOOT/COIN switches, etc.
CRT TEST : To check on-monitor image colors.
SOUND TEST : To check composite sound from the PCB.

1. Operating method

- o For the test mode, turn No. 8 of DIP SW 2 ON.
- o When the ROM/RAM are found to be normal, proceed to the next test mode.
- o To end the test mode, turn the power OFF.

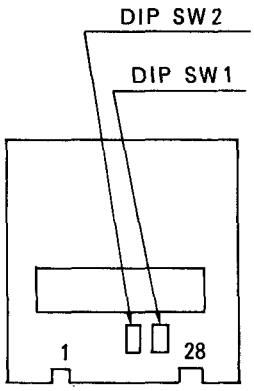

2. Description by test item

(1) IC test

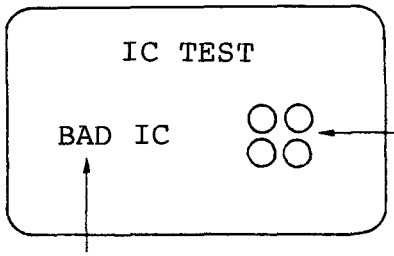

To be displayed only when RAM/ROM is (are) defective.

- o When this test is found to be normal, the test proceeds to the next test mode.
- o When ROM/RAM is (are) found to be defective, the defective IC numbers will be indicated and the test will not proceed to the next test mode.

(2) CONTROL SWITCHES/CRT/SOUND test

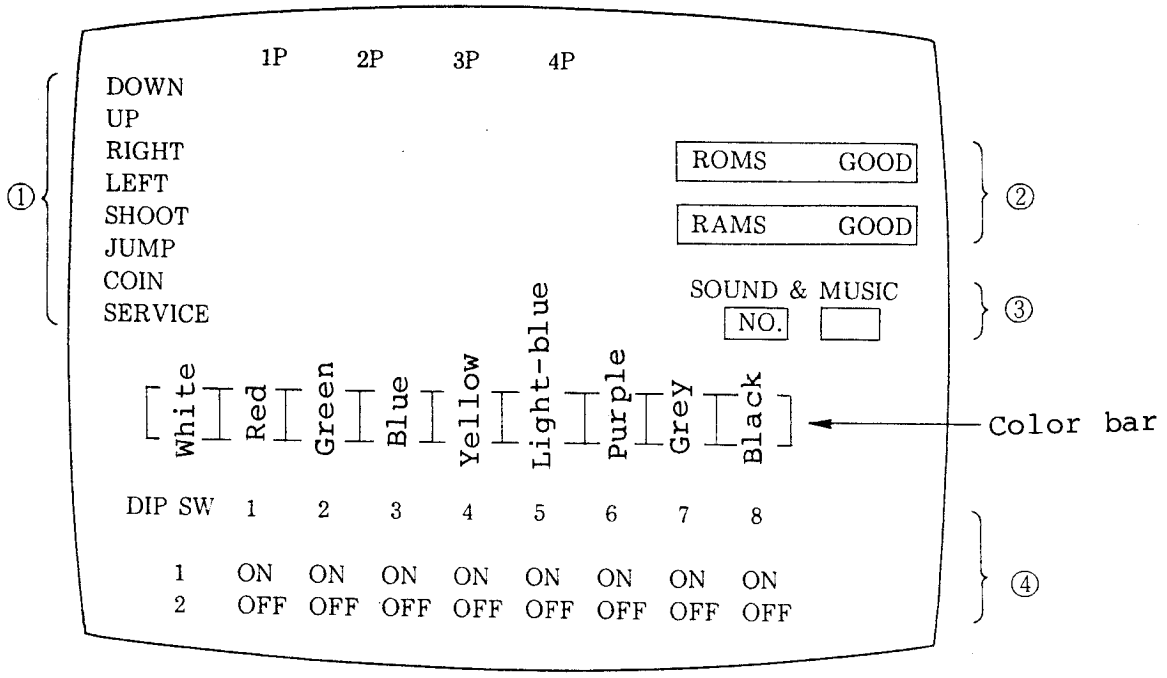

Note:

① The on-screen display of "ON" in the corresponding position for each of the 8 switches when pushed, signifies normal.

② Displays the results of testing in the IC test mode are satisfactory.

③ By pushing either one of the control switches, the sound test (see below) starts.
(Indications show hexadecimal 1～3D and 81～B2.)

④ The present setting of the dip switches.

HEXA-DECIMAL NO.	KING OF SOUND	OUT PUT SOUND	HEXA-DECIMAL NO.	KIND OF SOUND	OUTPUT SOUND
1	Voice	Five Four Three Two One	11	Voice	Oh!
2	Voice	Ready	12	Voice	Yeah!
3	Voice	Start	13	Voice	Great
4	Voice	Game over	14	Voice	World
5	Voice	Thank You	15	Voice	Go
6	Voice	Tokyo	16	Voice	Edgar
7	Voice	Japan	17	Voice	Mary
8	Not used		18	Not used	
9	Voice	Excited	19	Voice	Joe
0A	Voice	Game	1A	Voice	Lee
0B	Voice	Quartet	1B	Voice	Attack!
0C	Voice	Sega	1C	Voice	Left
0D	Voice	Come on	1D	Voice	Right
0E	Voice	Tonight	1E	Voice	Destroy the boss
0F	Voice	Let's try	1F	Voice	Only a key opens The door
10	Not used		20	Voice	Open the door

HEXA-DECIMAL NO.	KIND OF SOUND	OUTPUT SOUND	HEXA-DECIMAL NO.	KIND OF SOUND	OUTPUT SOUND
21	Voice	Ouch!	31	Voice	Good for you.
22	Not used		32	Voice	OK. Nothing to got excited about.
23	Not used		33	Not used	
24	Not used		34	Voice	Heaaa! You beat me.
25	Not used		35	Voice	Drum.
26	Not used		36	Not used	
27	Not used		37	Not used	
28	Not used		38	Not used	
29	Not used		39	Not used	
2A	Voice	Waaa!	3A	Not used	
		(Shriek)	3B	Voice	Yaaa!
2B	Not used				(Shriek)
2C	Voice	Woeee!	3C	Voice	Ouch!
		(Shriek)	3D	Voice	Clapping.
2D	Voice	Ahhh!			
		(Shriek)			
2E	Not used				
2F	Not used				
30	Voice	Its's too difficult for me to understand!			

HEXA-DECIMAL NO.	KIND OF SOUND	OUTPUT SOUND
81	Effect 1	Capturing power-Up goods.
82	Effect 2	The player appears.
83	Not used	
84	Not used	
85	Effect 3	Inserting coin.
86	Effect 4	3rd player's shot III.
87	Not used	
88	Not used	
89	Not used	
8A	Not used	
8B	Not used	
8C	Not used	
8D	Effect 8	Jumping.
8E	Not used	
8F	Not used	
90	Not used	
91	Not used	
92	Effect 12	2nd player's shot I & II.
93	Effect 13	1st player's shot IV.
94	Effect 14	4th player's shot III.
95	※BGM 1	
96	BGM 2	
97	Effect 15	Door opening.
98	Effect 16	2nd player's shot III.
99	Effect 17	player,s shot IV.
9A	Effect 18	Damage 1 (downed).
9B	Effect 19	Damage 2 (downed).
9C	Not used	
9D	Effect 21	Catching the power ball.
9E	Effect 22	Capturing the key.
9F	BGM 3	

※BGM indicates background music.

IIEXA-DECIMAL NO.	KIND OF SOUND	OUTPUT SOUND
A0	Effect 23	Becomes numb.
A1	BGM 4	
A2	BGM 5	Presentation ceremony.
A3	Effect 24	When the Power-Up good's image disappears.
A4	BGM 6	
A5	Effect 25	3rd player's Shot I & II.
A6	Effect 26	1st player's Shot III.
A7	Effect 27	Lightening.
A8	Effect 28	Trampoline.
A9	Effect 29	High whistle.
AA	Effect 30	Low whistle.
AB	BGM 7	
AC	BGM 8	
AD	BGM 9	
AE	Effect 31	3rd player's shot IV.
AF	Effect 32	4th player's shot I.
B0	Effect 33	1st player's shot I & II.
B1	Effect 34	2nd players shot Ⅳ
B2	Effect 35	4th player's shot II.

11. PARTS CATALOG

① TOP ASSY SEGA QUARTET (QT-0000) (D-1/2)

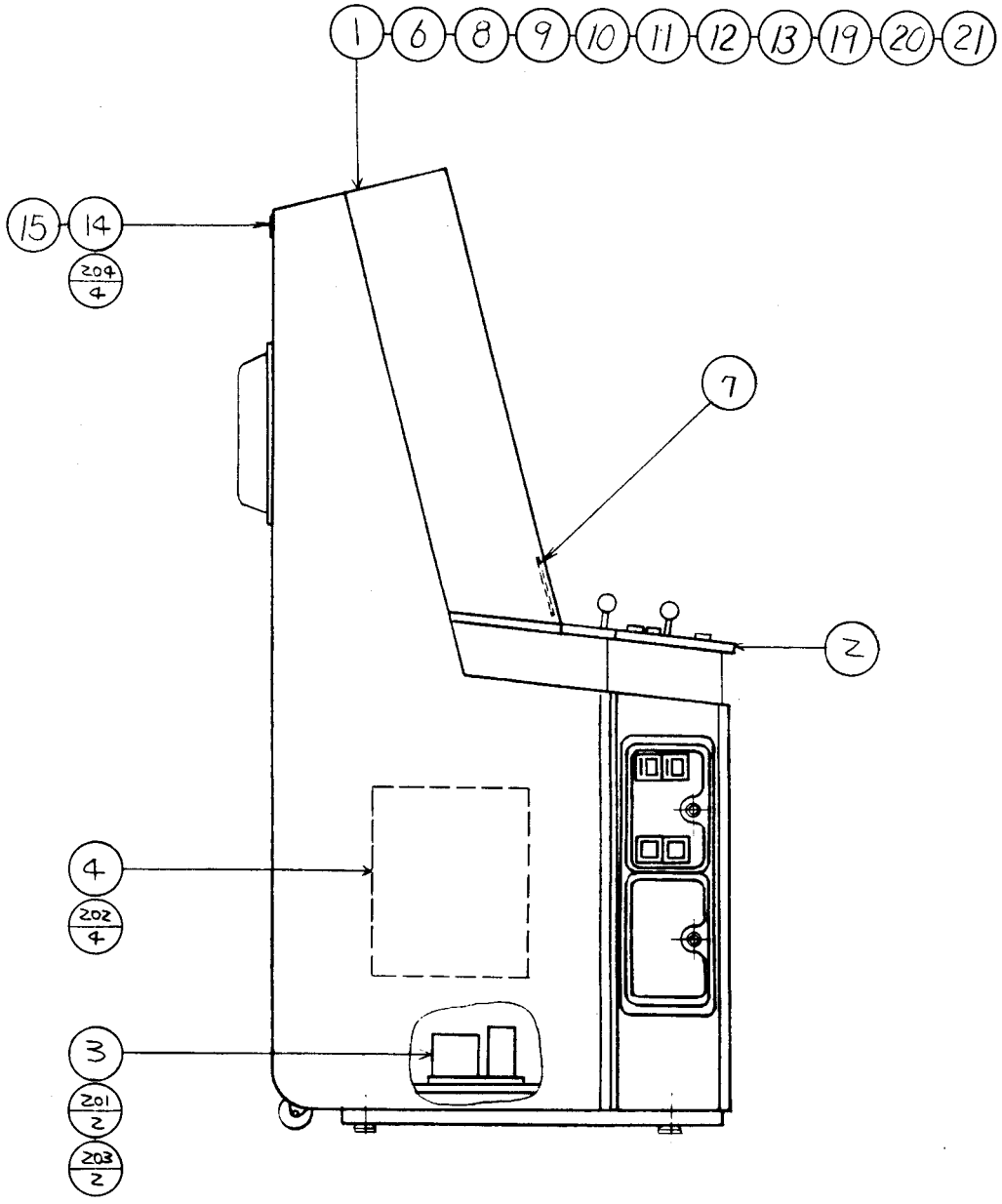

① TOP ASSY SEGA QUARTET (QT-0000) (D-2/2)

ITEM NO.	PART NO.	DESCRIPTION
1	QT-1000	ASSY CABINET
2	QT-2000	ASSY CONTROL PANEL
3	QT-40001	ASSY PWR SPLY
4	833-5973	GAME BOARD QUARTET SECURITY
5	421-5800-34	ORIGINAL SEAL QUARTET
6	420-5288	OWNERS MANUAL QUARTET
7	422-0115	PLAY INSTR SH QUARTET ENG
8	421-6297	ADJ INSTR SH QUARTET
9	81979	STICKER SERVICE INSTR
10	80931	STICKER COIN METER
11	83005	STICKER MAIN SW PUSH ON PUSH OFF
12	420-5289	DISPLAY MANUAL 200-5072
13	82789	STICKER DANGER HIGH VOLTAGE
15	83602	STICKER SERIAL NO INFO
19	SGM-2627	POLYETHYLENE BAG 240×370
20	SGB-1035X	KEY BAG
21	SGM-1800	POLYETHYLENE COVER 800×1000×1800
22	80027XY	NAME PLATE ELEC SPEC
	911	WIRING DIAGRAM SEGA QUARTET EXPORT
201	000-0530	M SCR PH M5×30
202	005-3516-F	W SCR RH W/F 3.5×16
203	069-0001	FLT WSHR 5.5-20×1.6
204	046-0001	SCR NAIL THH 1.5×16
	421-6119	STICKER FCC
	421-6186-29	DENOMINATION 2×25¢
	421-6186-37	DENOMINATION 25¢
	421-6120	STICKER SEGA USA

② ASSY CABINET (QT−1000) (D−1/3)

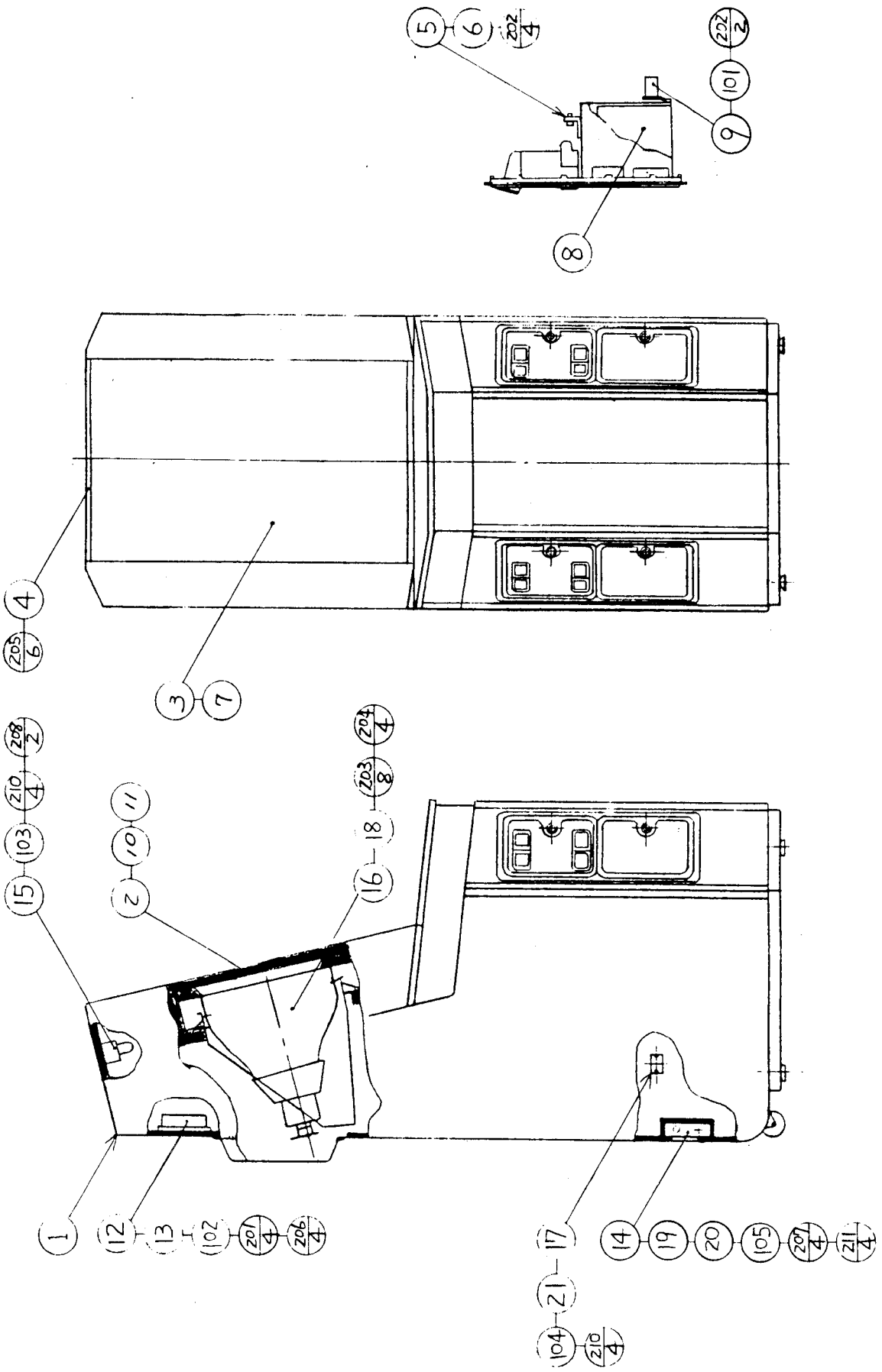

② ASSY CABINET (QT-1000) (D-2/3)

	PART NO.	DESCRIPTION
1	QT-1001	ASSY SUBCABINET
2	QT-1011	MASK BOARD
3	QT-1012	WINDOW GLASS
4	QT-1013	GLASS HOLDER TOP
5	QT-1014	SWITCH UNIT A
6	QT-1016	SWITCH UNIT B
7	423-0022	DESIGN PLATE QUARTET
8	RA-1008	CASHBOX
9	RA-1016	METER BRKT
10	AB-1151Y	TV MASK GRAY SMOKE
11	AB-1206	TV MASK T8 20
12	HN-1042	FAN BRKT
13	MO-1051X	GUARD PLATE
14	MO-1215Y	COVER
15	VE-1036	FL BRKT
16	TY-1019	BRKT TV
17	105-0064	BRKT MAIN SW
18	200-5044	ASSY CLR DSPL 20″ TYPE
	200-5072	ASSY CLR DSPL 20″ TYPE
19	280-0417	TERMINAL BINDING POST BLK
20	280-0418	BUSHING STRAIN RELIEF 8.3
21	509-0049	SW STOPPER 12∅
22	SGB-3705-1	WIRE HARN AC
	211-0081	CONN CAP AMP 3P BROWN
	209-0023	CONN CLOSED END
23	SGB-3705-2	WIRE HARN EARTH
	211-0167	TERMINAL LUG ROUND ID 5
24	SGB-3705-3	WIRE HARN FAN MOTOR
	211-0095	CONN PLUG AMP 2P ORANGE
25	SGB-3705-4	WIRE HARN FL 15W
	211-0095	CONN PLUG AMP 2P ORANGE
	209-0023	CONN CLOSED END
26	SGB-3705-5	WIRE HARN COIN MTR
	211-0073	CONN PLUG AMP 4P WHITE
	209-0023	CONN CLOSED END
27	SGB-3705-6	WIRE HARN MAIN
	211-0044	CONN CAP AMP 2P WHITE
	211-0115	CONN CAP AMP 2P RED
	211-0060	CONN CAP AMP 3P WHITE
	211-0081	CONN CAP AMP 3P BROWN
	211-0118	CONN CAP AMP 3P RED
	211-0119	CONN CAP AMP 3P ORANGE
	211-0072	CONN CAP AMP 4P WHITE
	211-0082	CONN CAP AMP 4P BROWN
	211-0121	CONN CAP AMP 4P RED
	211-0049	CONN CAP AMP 15P WHITE
	211-0093	CONN CAP AMP 15P BROWN
	211-0048	CONN PLUG AMP 15P WHITE
	209-0035	CONN 56P FOR PCB

② ASSY CABINET (QT-1000) (D-3/3)

ITEM NO.	PART NO.	DESCRIPTION
101	220-5064	MAG CNTR 6 DIG DC 5V
102	260-0011	AXIAL FLOW FAN AC 100V 50-60 Hz
103	390-5108-01	ASSY FL LIGHT 15W 50 Hz PALUCK
104	509-0039	SW PUSH BUTTON TYPE
105	600-0078	CABLE & PLUG ASSY
106	280-0419	HARNESS LUG
107	211-0041	CONN PIN AMP
108	211-0042	CONN SOCKET AMP
109	280-0474	CONN CONTACT
201	000-0306-F	M SCR PH W/F M3×6
202	000-0408-S	M SCR PH W/S M4×8
203	000-0510-S	M SCR PH W/S M5×10
204	000-0520-S	M SCR PH W/S M5×20
205	029-0021	M SCR TH BLK M4×18
206	008-0416	TMP PRF SCR TH M4×16
207	031-0425-B	CRG BLT-BLK M4×25
208	010-0408-F	S-TITE SCR PH W/F M4×8
209	005-3113-F	W SCR RH W/F 3.1×13
210	005-3513-F	W SCR RH W/F 3.5×13
211	051-0004	FLG NUT M4

③ ASSY SUBCABINET (QT−1001) (D−1/3)

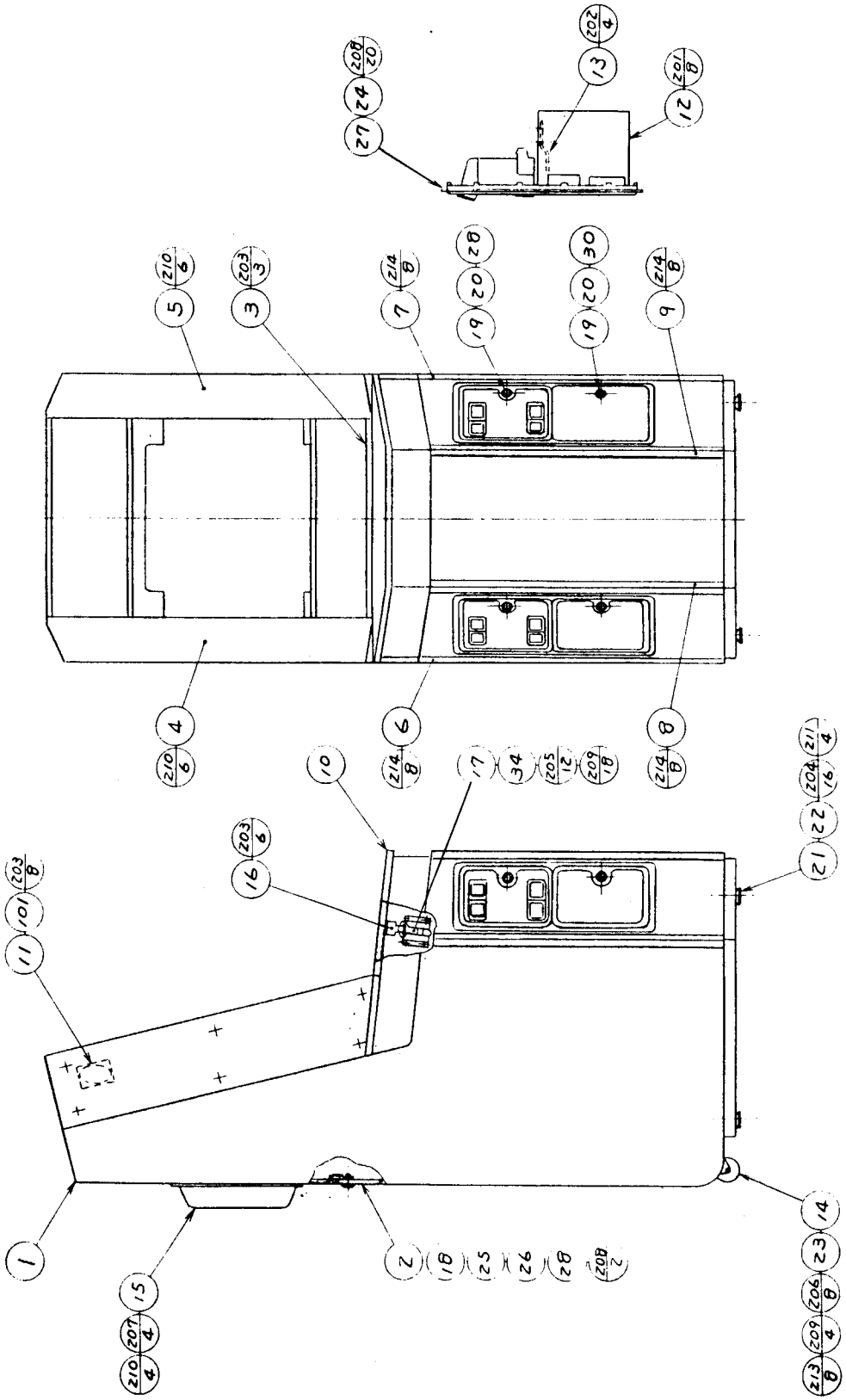

③ ASSY SUBCABINET (QT-1001) (D-2/3)

ITEM NO.	PART NO.	DESCRIPTION
1	QT-1002	WOODEN CABINET
2	QT-1003	BACK DOOR
3	QT-1004	GLASS HOLDER LOWER
4	QT-1005	ORNAMENT PANEL A
5	QT-1006	ORNAMENT PANEL B
6	QT-1007	CORNER PROTECTOR A
7	QT-1008	CORNER PROTECTOR B
8	QT-1009	CORNER PROTECTOR C
9	QT-1010	CORNER PROTECTOR D
10	QT-2001	TABLE BOARD USED FOR QT-2000
11	RH-1511	GUARD PLATE
12	RA-1007	COVER CASHBOX
13	RA-1009	LOCK BRACKET
14	TA-1065X	NUT PLATE
15	MO-1053	COVER
16	MO-2015	HOOK
17	UC-1013	BRACKET
18	DP-1148X	LKG TNG
19	DP-1167	TNG LKG
20	HN-1050	SPACER RING
21	TI-1079	LEG ADJUSTER BRKT
22	601-0455	LEG ADJUSTER
23	601-0391	CASTER
24	109-0045	KEY HOLDER
25	117-0062	PLATE LOCK RETAINER
26	117-5098	TNG RETAINER PLATE
27	220-5128-25	ASSY COIN CHUTE 2 DOOR ¥ 100 TWIN
28	220-5044-01	MAG LOCK W/O KEY
29	220-5045-01	KEY MASTER FOR 220-5044-01
30	220-5046	MAG LOCK W/KEY
31	SGB-3705-12	WIRE HARN COIN SW #1
	211-0087	CONN PLUG AMP 4P BROWN
	280-5016	FASTON RCPT 205
32	SGB-3705-13	WIRE HARN COIN SW #2
	211-0100	CONN PLUG AMP 4P RED
	280-5016	FASTON RCPT 205
33	SGB-3705-9	WIRE HARN SPKR
	211-0094	CONN PLUG AMP 2P RED
	280-5015	FASTON RCPT 187
34	250-5010	SUPER CLAMP
101	130-5001	SPKR 8 OHM ⌀ 120
102	211-0041	CONN PIN AMP
103	280-0419	HARNESS LUG
104	280-0425	CORD CLAMP ⌀ 10

③ ASSY SUBCABINET (QT-1001) (D-3/3)

ITEM NO.	PART NO.	DESCRIPTION
201	000-0406-S	M SCR PH W/S M4×6
202	000-0408-S	M SCR PH W/S M4×8
203	000-0420-FS	M SCR PH W/FS M4×20
204	000-0520-FS	M SCR PH W/FS M5×20
205	001-0406	M SCR FH M4×6
206	030-0625	HEX BLT M6×25
207	031-0425-B	CRG BLT-BLK M4×25
208	005-3113-F	WOOD SCR RH W/F 3.1×13
209	005-3513-F	WOOD SCR RH W/F 3.5×16
210	051-0004	FLG NUT M4
211	059-0007	HEX NUT 3/8-16
212	060-0006	FLT WSHR M6
213	061-0006	SPR WSHR M6
214	046-0001	SCR NAIL THH STNLS 1.5×16

④ ASSY CONTROL PANEL (QT-2000)

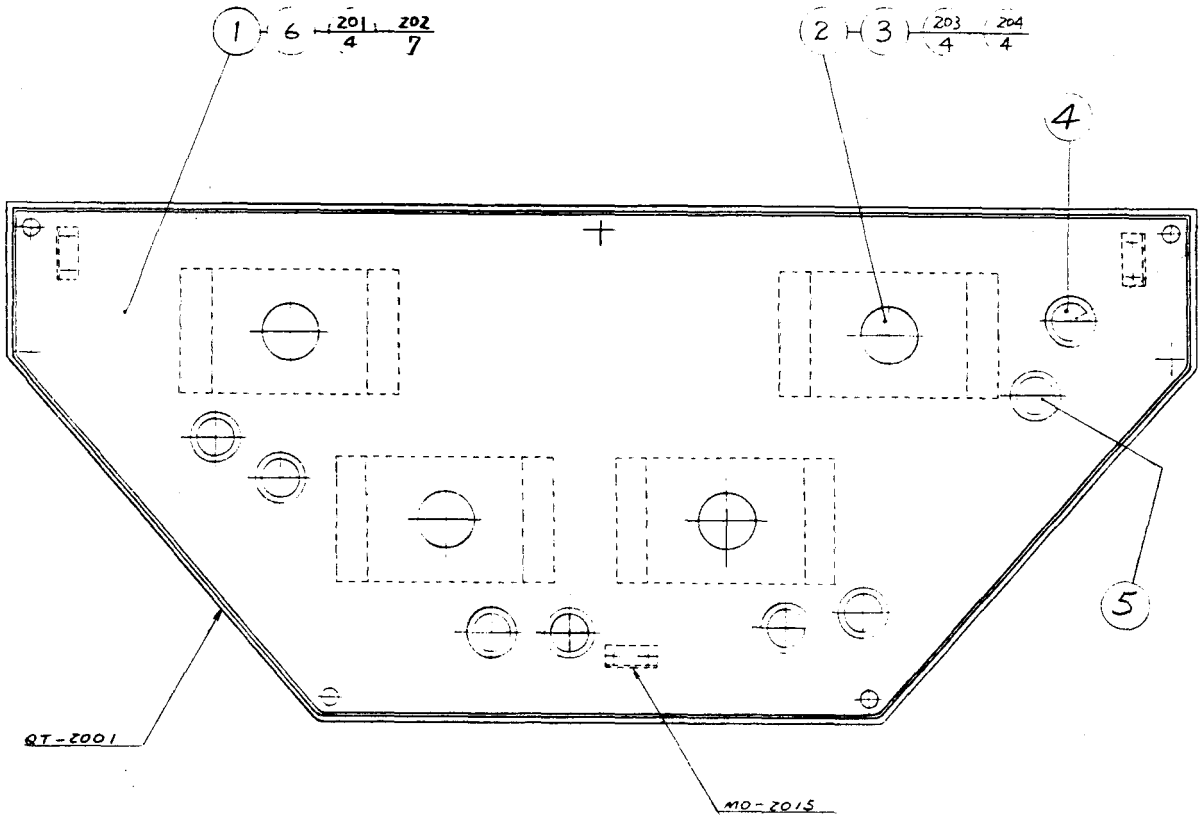

ITEM NO.	PART NO.	DESCRIPTION
1	QT-2002	CONTROL PANEL PLATE
2	610-0001	ASSY 8 WAY JOYSTICK (LS-14B)
3	QT-2003	BRACKET
4	509-5135-01	SW PUSH BUTTON 1M RED
5	509-5135-03	SW PUSH BUTTON 1M YELLOW
6	QT-2004	CONT PANEL BASE
7	SGB-3705-7	WIRE HARN CONT PANEL #1
	211-0048	CONN PLUG AMP 15P WHITE
	280-0472	FASTON RCPT 110
	280-5015	FASTON RCPT 187
8	SGB-3705-8	WIRE HARN CONT PANEL #2
	211-0092	CONN PLUG AMP 15P BROWN
	280-0472	FASTON RCPT 110
	280-5015	FASTON RCPT 187
101	211-0041	CONN PIN AMP
102	280-5008	CORD CLAMP ∅ 15
201	031-0520	CRG BLT M5×20
202	051-0005	FLG NUT M5
203	051-0004	FLG NUT M4
204	000-0416-S	M SCR PH W/S M4×16
205	006-3113	W SCR FH 3.1×13

⑤ SWITCH UNIT A (QT-1014)

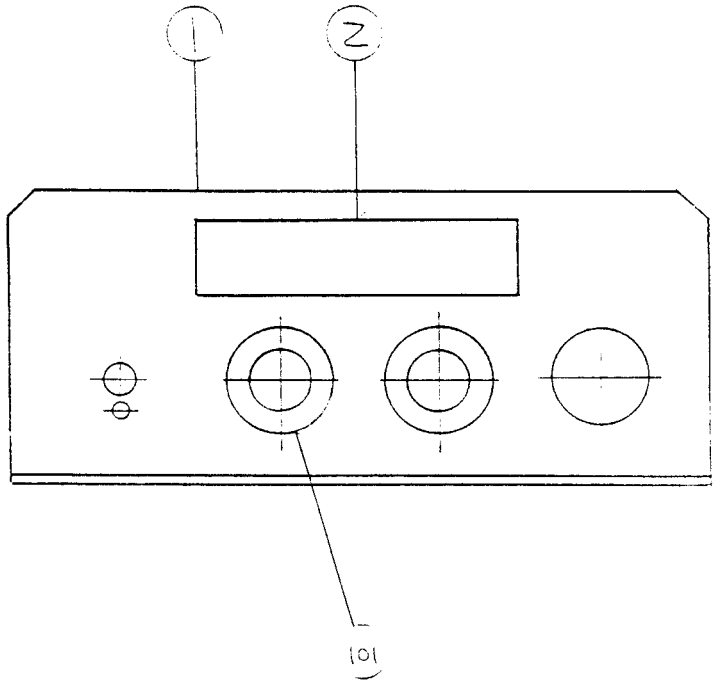

ITEM NO.	PART NO.	DESCRIPTION
1	QT-1015	SW BRKT
2	421-6287	STICKER SW A
3	SGB-3705-10	WIRE HARN CONT UNIT A
	211-0086	CONN PLUG AMP 3P BROWN
	211-0041	CONN PIN AMP
	280-0472	FASTON RCPT 110
101	509-5028	SW PB 1M

⑥ SWITCH UNIT B (QT-1016)

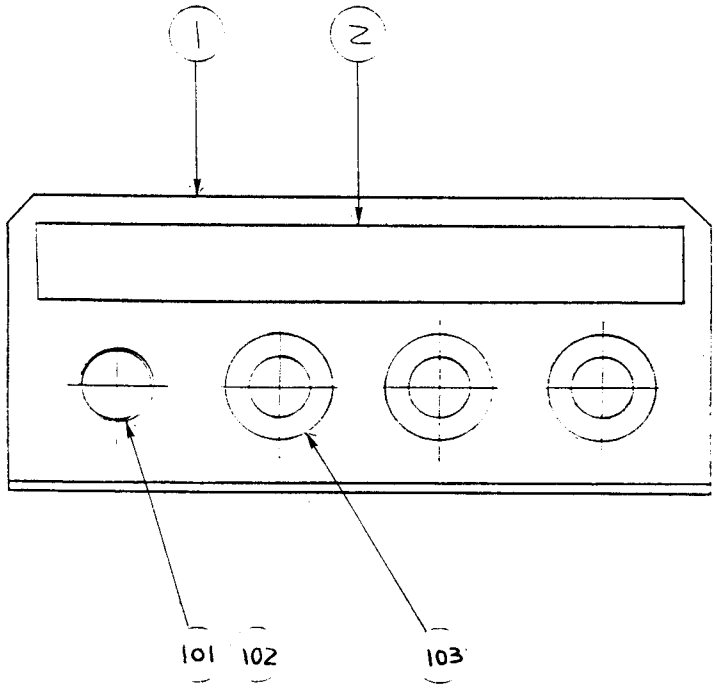

ITEM NO.	PART NO.	DESCRIPTION
1	QT-1015	SW BRKT
2	421-6288	STICKER SW B
3	SGB-3705-11	WIRE HARN CONT UNIT B
	211-0094	CONN PLUG AMP 2P RED
	211-0097	CONN PLUG AMP 3P RED
	211-0098	CONN PLUG AMP 3P ORANGE
	280-0472	FASTON RCPT 110
	211-0041	CONN PIN AMP
101	475-0049	RHEO STAT 100 Ω 10W
102	240-0125	KNOB METAL
103	509-5028	SW PB 1M

⑦ ASSY POWER SUPPLY (QT-40001)

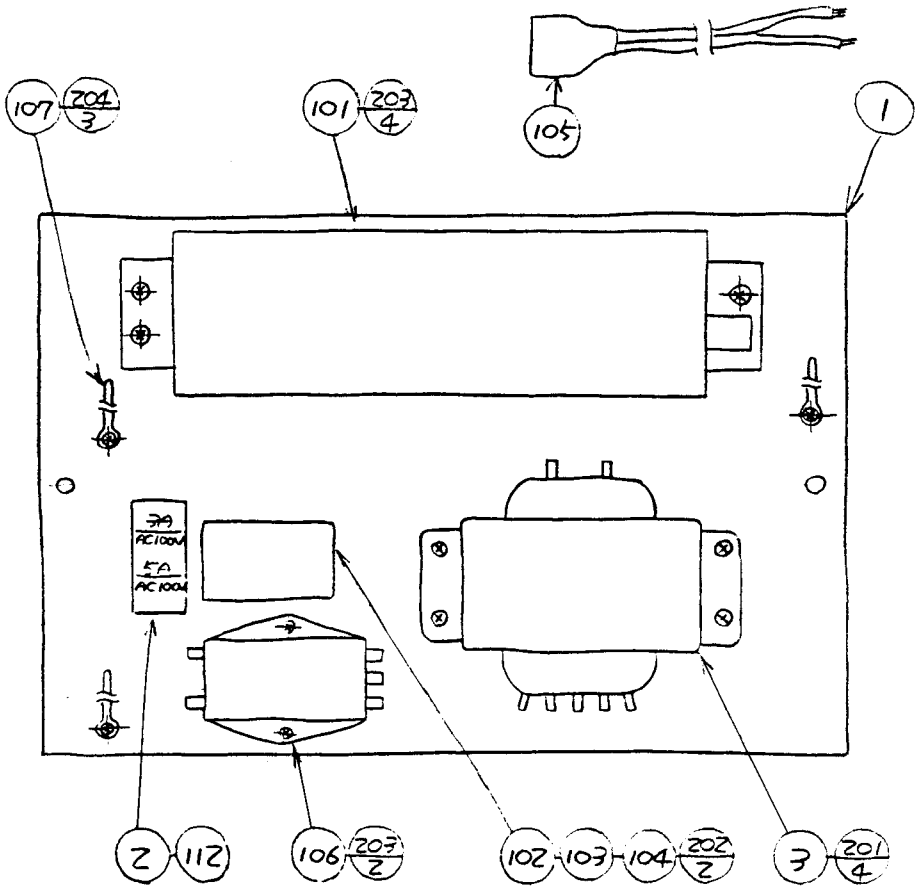

ITEM NO.	PART NO.	DESCRIPTION
1	QT-4001	BASE
2	421-6061	FU INSTR
3	560-5069	PWR XFMR 90-240V 100V
4	SGB-3705-14	WIRE HARN PWR SPLY
	211-0115	CONN CAP AMP 2P RED
	211-0116	CONN CAP AMP 2P ORANGE
	211-0117	CONN CAP AMP 2P YELLOW
	211-0049	CONN CAP AMP 15P WHITE
	211-0086	CONN PLUG AMP 3P BROWN
5	TH-4003	COVER
6	81319	STICKER 120V
101	400-5040	SW REGU 90-240V +5V 9A +12V 1.5A
102	514-0064	FU HLDR 2P W/COV
103	514-0036	FU 3A 6.4∅×30mm
104	514-0034	FU 5A 6.4∅×30
105	600-5133	CABLE & CONN 300L
106	601-0429	NOISE FILTER AC 250V 4A
107	280-0419	HARNESS LUG
108	209-0023	CONN CLOSED END
109	211-0167	TERM LUG RND ID 5
110	211-0041	CONN PIN AMP
111	211-0042	CONN SOCKET AMP
112	601-0769	STAPLE MAX #3
201	000-0414-FS	M SCR PH W/FS M4×14
202	005-3120	W SCR RH 3.1×20
203	005-3513	W SCR RH 3.5×13
204	005-3510	W SCR RH 3.5×10
205	244-063	DOUBLE FACE TAPE 20mm×50m/ROLL

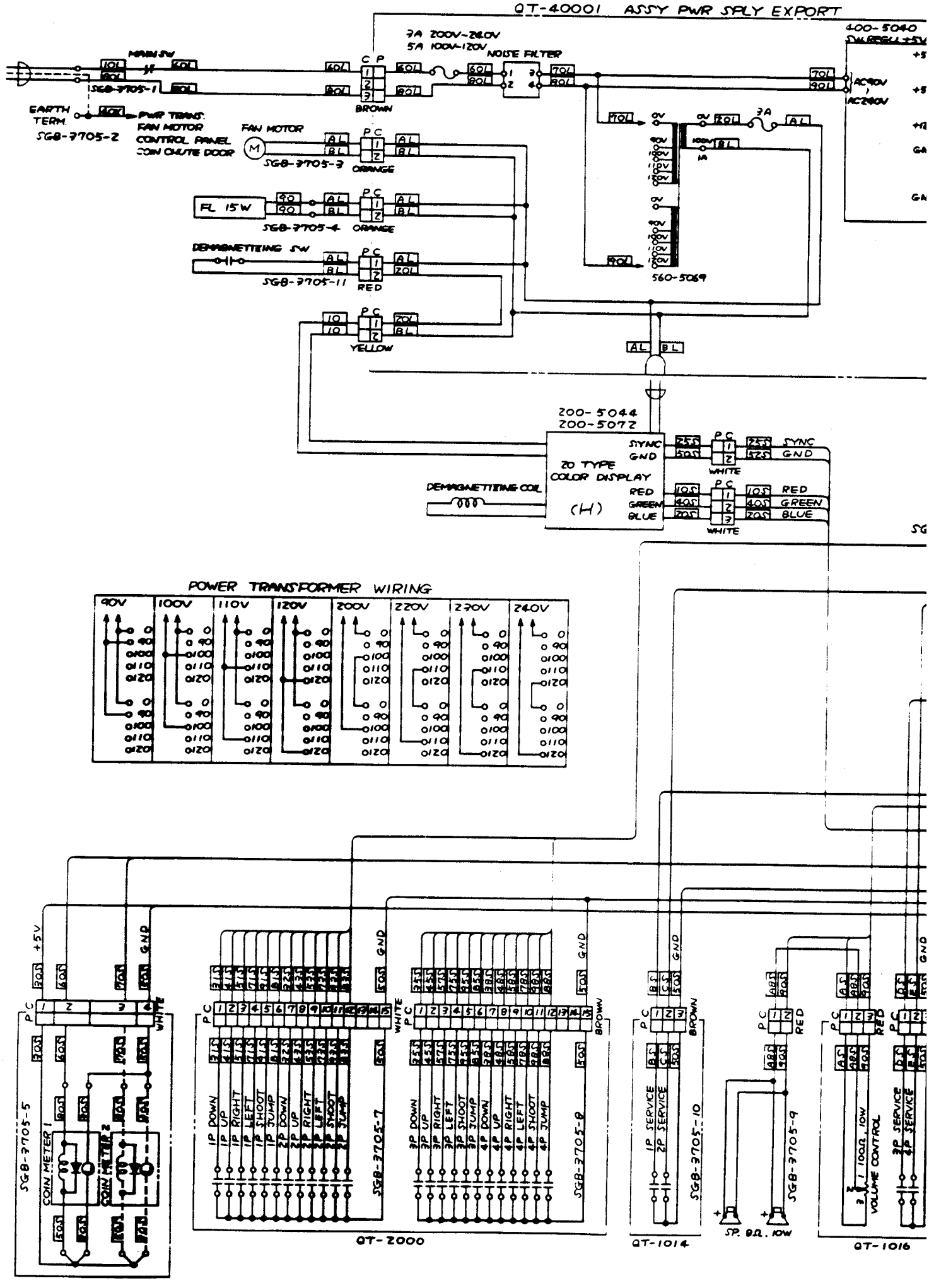
QT-40001 ASSY PWR SPLY EXPORT
7A 200V-240V
5A 100V-120V
NOISE FILTER
MAIN SW
SGB-7705-1
EARTH TERM.
SGB-7705-2
PWR TRANS.
FAN MOTOR
CONTROL PANEL
COIN CHUTE DOOR
FAN MOTOR
SGB-7705-3
ORANGE
FL 15W
SGB-7705-4
ORANGE
DEMAGNETTEING SW
SGB-7705-11
RED
YELLOW
BROWN
560-5069
400-5040
AC90V
AC240V
200-5044
200-5077
20 TYPE
COLOR DISPLAY
(H)
SYNC
GND
RED
GREEN
BLUE
WHITE
DEMAGNETTEING COIL
POWER TRANSFORMER WIRING
90V
100V
110V
120V
200V
220V
230V
240V
SGB-7705-5
COIN METER 1
COIN METER 2
SGB-7705-7
SGB-7705-8
QT-2000
SGB-7705-10
QT-1014
SGB-7705-9
SP. 8Ω. 10W
QT-1016
VOLUME CONTROL
1P DOWN
1P UP
1P RIGHT
1P LEFT
1P SHOOT
1P JUMP
2P DOWN
2P UP
2P RIGHT
2P LEFT
2P SHOOT
2P JUMP
3P DOWN
3P UP
3P RIGHT
3P LEFT
3P SHOOT
3P JUMP
4P DOWN
4P UP
4P RIGHT
4P LEFT
4P SHOOT
4P JUMP
1P SERVICE
2P SERVICE
3P SERVICE
4P SERVICE

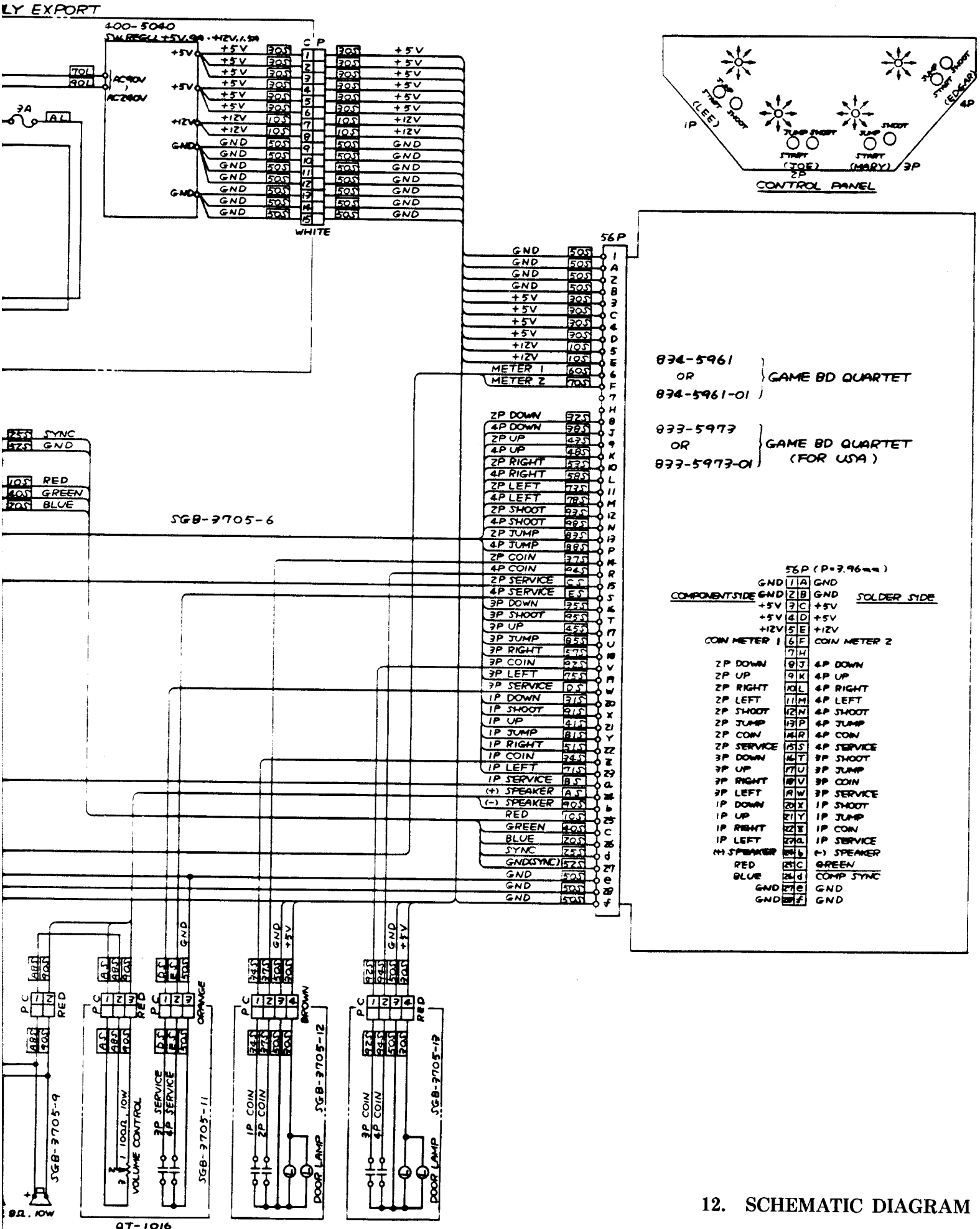

12. SCHEMATIC DIAGRAM

SEGA ENTERPRISES, LTD.
No. 2－12, Haneda 1－chome
Ohta-ku, Tokyo 144, Japan
○ Tel. : (03) 743 － 7438
○ FAX : (03) 743 - 5539
○ TLX : J22357 SEGASTAR

© SEGA 1986

Printed in Japan