TAITO AMERICA CORPORATION

S C I

Special Criminal Investigation

TM

OPERATING MANUAL



TAITO

TAITO AMERICA CORPORATION
660 S. Wheeling Road
Wheeling, IL 60090
Telephone (708) 520-9280
Fax (708) 520-1309

Part No. 210-200710

S P E C I F I C A T I O N S

POWER SUPPLY	120 VAC (60Hz)
POWER CONSUMPTION	250 WATTS
TV MONITOR	19" COLOR RASTER
DIMENSIONS	25 1/2"W x 37"D x 72 1/2"H

T A B L E O F C O N T E N T S

	Page Numbers
GAME INSTALLATION	2
CABINET ILLUSTRATIONS	3 - 6
GAME OPERATION & PLAY INSTRUCTIONS	7
SELF-TEST MODE	8 - 10
SERVICE ACCESS DRAWER AND POWERHOUSE ASSEMBLY	11 - 14
OPTION DIP-SWITCH SETTINGS	15 - 16
SUB-ASSEMBLY ILLUSTRATIONS & PARTS IDENTIFICATION	17 - 25

*** WARNING ***

THIS GAME MUST BE PROPERLY GROUNDED. FAILURE TO DO SO MAY RESULT IN DESTRUCTION TO THE ELECTRONIC COMPONENTS.

*** ATTENTION ***

THE COPYRIGHTED VIDEO GAME THAT ACCOMPANIES THIS MANUAL CARRIES WITH IT A ROYALTY FREE, NON-EXCLUSIVE LICENSE FROM THE COPYRIGHT OWNER TO THE OWNER OF THE VIDEO GAME TO PUBLICLY PERFORM THE COPYRIGHTED VIDEO GAME IN THE UNITED STATES OF AMERICA, CANADA, AND MEXICO. THIS PUBLIC PERFORMANCE LICENSE ATTACHES AND APPLIES ONLY TO THE PHYSICAL EMBODIMENT OF THE VIDEO GAME THAT ACCOMPANIES THIS MANUAL. THIS PUBLIC PERFORMANCE LICENSE MAY ONLY BE TRANSFERRED TO THE SUBSEQUENT OWNER(S) OF THE PHYSICAL EMBODIMENT OF THE VIDEO GAME THAT ACCOMPANIES THIS MANUAL.

I. GAME INSPECTION

S.C.I. has been thoroughly tested and readied for operation at the factory and should not require any special set-up procedure. However, it is suggested that upon receiving your game you examine the following to further insure the game is in proper working condition:

CHECK:

[ ] Plug-in connectors are firmly seated.
[ ] All player control connections are complete.
[ ] No loose components on the printed circuit boards.
[ ] Fuses are installed firmly in holders.
[ ] Coin mechanisms are operating properly.
[ ] No loose foreign objects in cabinet (screws, components, etc.) which may cause shorting and result in damage to the game.

If problems do occur or technical assistance is required, please call our Customer Service Department at 708/520-9280.

II. POWER REQUIREMENTS

The game is shipped ready for operation at 120VAC, 60Hz with a power consumption of approximately 250 watts.

C A U T I O N

FOR SAFE OPERATION IT IS STRONGLY RECOMMENDED THE CABINET BE PROPERLY GROUNDED. THIS GAME IS EQUIPPED WITH A THREE CONDUCTOR POWER CABLE. THE THIRD PRONG (round in shape) WILL AUTOMATICALLY GROUND THE GAME WHEN PLUGGED INTO A PROPERLY GROUNDED THREE PRONG RECEPTACLE. IF IT BECOMES NECESSARY TO USE AN ADAPTER, THE GROUNDING LUG OR WIRE ON THE ADAPTER MUST BE PROPERLY GROUNDED TO ASSURE SAFE OPERATION.

III. GAME INSTALLATION

The following precautions should be followed when installing the game:

* Handle the game with care so as not to damage the fragile picture tube.

* Do NOT install the game in direct sunlight or near a heat source. Doing so might cause the internal temperature of the game to exceed it's maximum operating temperature and could result in damage to the game's components.

* Do NOT install the game in excessively dusty or damp environments.

CABINET FRONT VIEW

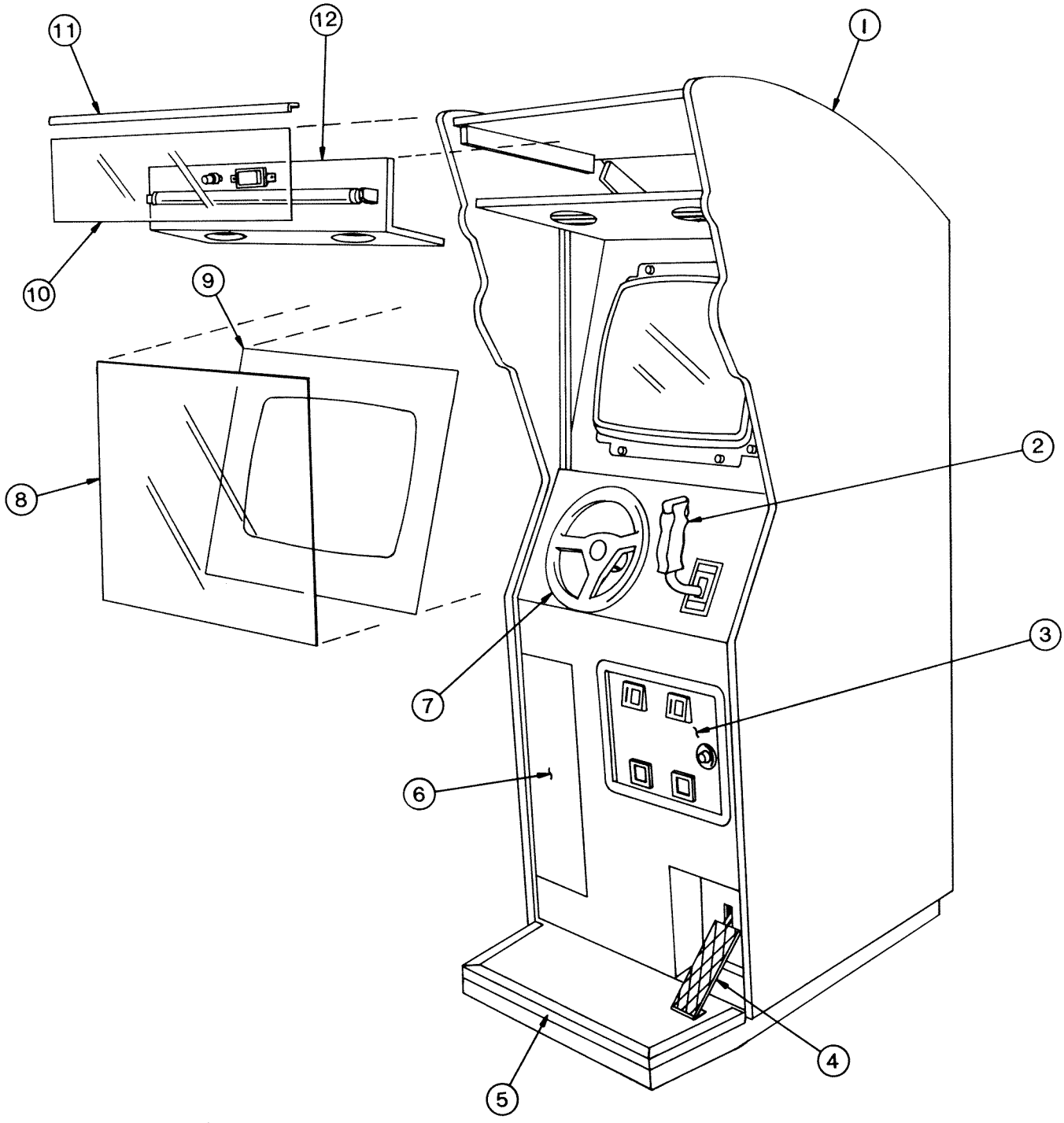

CABINET FRONT VIEW
PARTS LIST

KEY	DESCRIPTION	REF NO.	PART NO.
1	UPRIGHT MODEL CABINET		210-809110
2	GUN/SHIFTER ASSEMBLY		210-403200
3	COIN DOOR ASSEMBLY		900-800220
	COIN BOX ASSEMBLY	NOT SHOWN	900-800225
4	ACCELERATOR PEDAL ASSEMBLY		210-403000
5	STEP TRIM		210-800501
6	SERVICE ACCESS DOOR		
7	STEERING WHEEL ASSEMBLY		210-403500
8	MONITOR COVER-GLASS		210-200810
9	MONITOR BEZEL		210-200110
10	GAME TITLE MARQUEE		210-200210
11	MARQUEE MOUNTING BRACKET		900-800504
12	FLUORESCENT LAMP ASSEMBLY		900-600300
	4" SPEAKERS, 8OHM	NOT SHOWN	900-600901

CABINET REAR VIEW

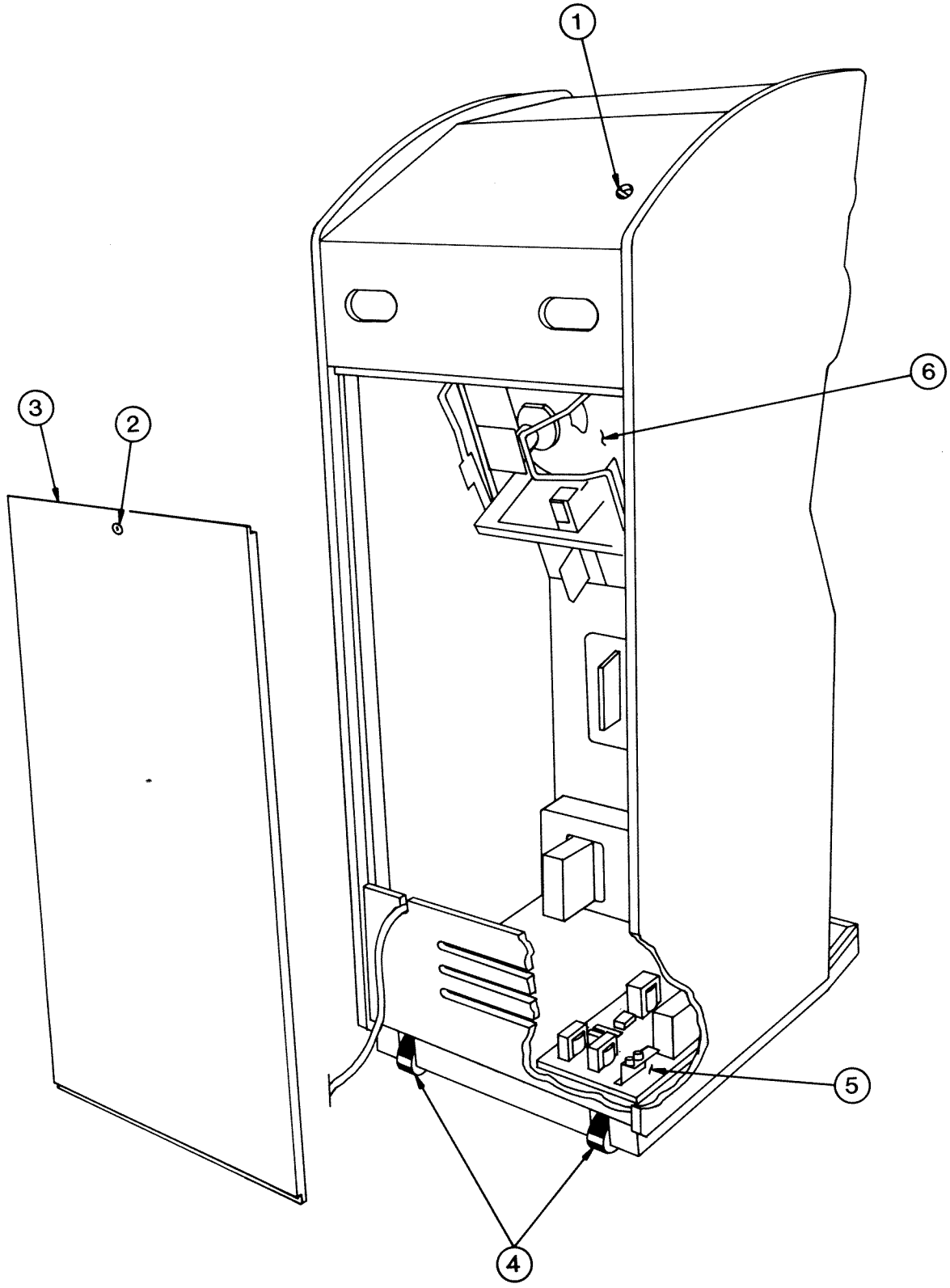

CABINET REAR VIEW
PARTS LIST

KEY	DESCRIPTION	REF NO.	PART NO.
1	ON/OFF SWITCH ASSEMBLY		900-600601
2	BACK CABINET ACCESS DOOR		
3	LOCK, BACK DOOR		
4	CASTERS		
5	POWERHOUSE ASSEMBLY		
6	COLOR MONITOR, 19 INCH		900-601100

IV. GAME INSTRUCTIONS

S.C.I. is a fast-action driving game in which the player pursues wanted criminals. The player must race against time through city back-roads, country dirt-roads and the winding curves of a mountain side. He must use skill in maneuvering around such dangers as falling rocks, opened bridges and even the crashing of waves onto an ocean-front highway. A vibrating steering wheel enhances the experience by simulating the feeling of driving over rough terrain.

* The controls include a vibrating steering wheel, a gun/turbo shifter combination and a three position accelerator pedal for speeding, coasting and braking.
* The player drives a high speed car in pursuit of the criminal's car or target vehicle.
* A scale indicating the distance to the target vehicle is shown on the right side of the screen.
* While in pursuit, a timer counts down the time given to catch up to the target vehicle.
* Before the player can apprehend the criminal, he must first fight off a criminal gang of motorcyclists by bumping them off the road.
* When the player is in range of the target vehicle, the timer resets to give the player more time, a siren sounds and an arrow appears to identify the target vehicle.
* Using two methods, ramming into and shooting, the player cripples the target vehicle.
* When shooting, a gunsight appears to assist the player in aiming accurately.
* A scale indicating the amount of damage to the target vehicle appears on the left side of the screen.

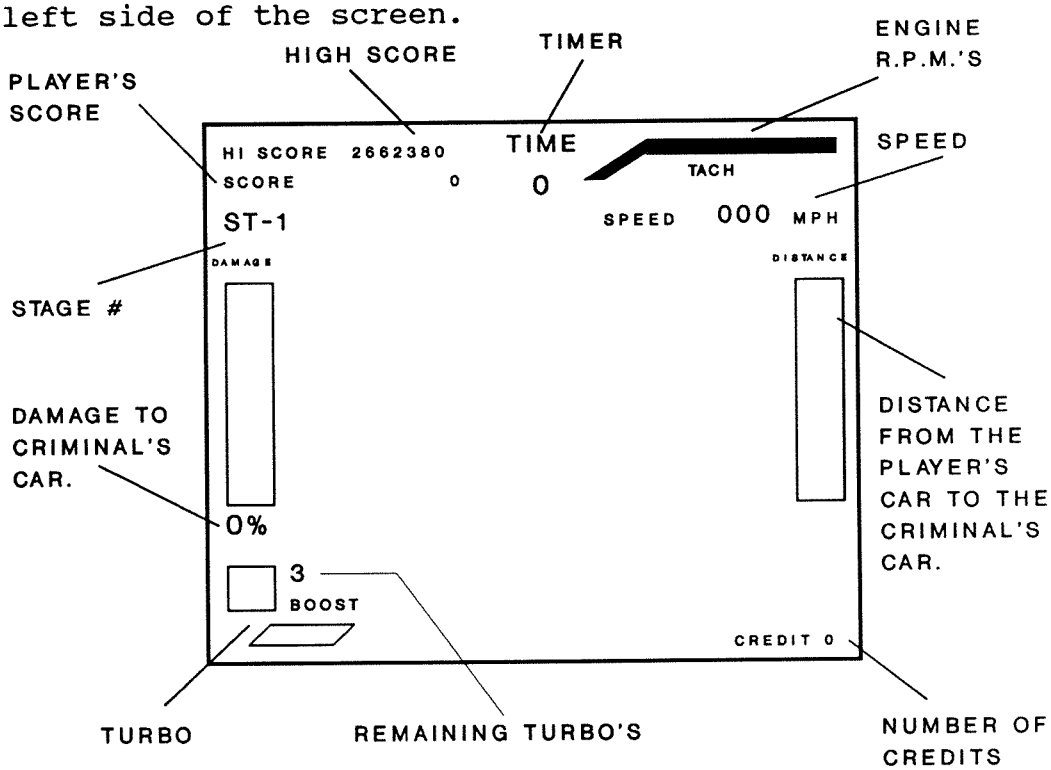

V. GAME PCB ADJUSTMENTS

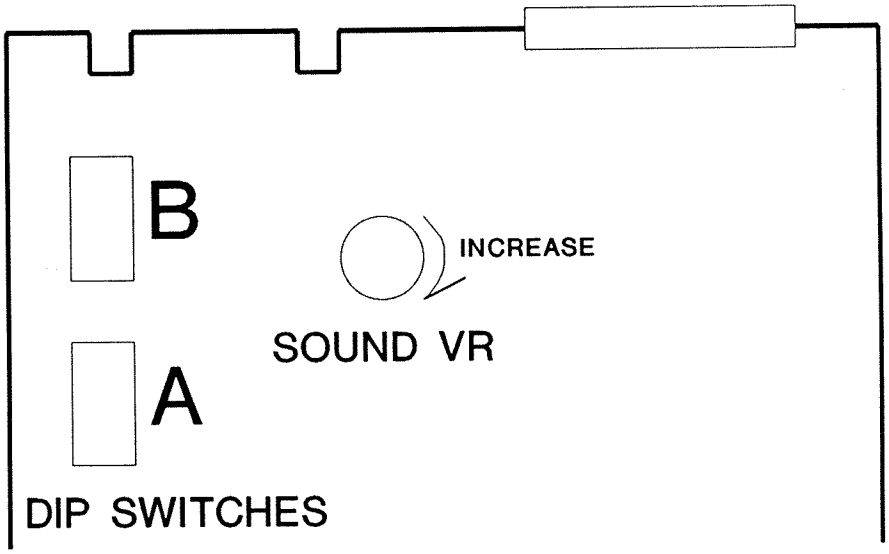

VI. SELF-TEST MODE

A. TO ENTER THE SELF-TEST MODE

1. Turn power OFF.
2. Locate Dip Switch Bank A on the main logic PCB and slide switch #3 to the ON position.
3. Turn power ON.

The game will automatically conduct a test of its rom and ram memory and indicate if a problem is found.

* ROM/RAM & COLOR MONITOR TEST - This screen is the first to appear in the self-test mode.

* SWITCH/FUNCTION TEST MODE - Press the START button to enter this test.

TV MONITOR

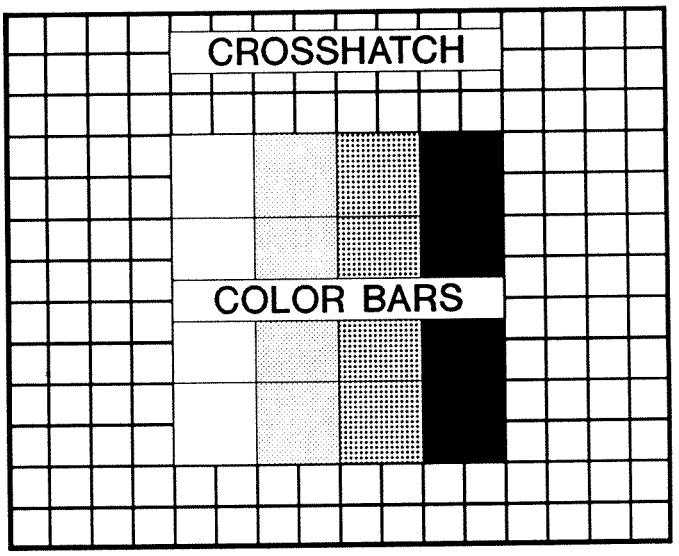

B. ROM/RAM & COLOR MONITOR TEST

1. During the first stage of this test, the game conducts a self-test of its ROM and RAM memory and indicates if a problem is found.

2. During the second stage of this test, the screen displays a color bar and crosshatch pattern to assist in adjusting the color monitor.

D. SWITCH/FUNCTION TEST MODE

1. Press each game control switch to test. While depressed, the corresponding display for that switch will change from OFF to ON. This indicates the switch is operating properly.

```
                    TEST MODE
COIN A:    OFF                    COIN B:    OFF
SERVICE:   OFF                    TILT:      OFF
ACCEL:     OFF                    SHIFT:     OFF
BRAKE:     OFF                    TURBO:     OFF
START:     OFF                    GUN:       OFF
HANDLE:    OFF                    CENTER:    OFF
               8 7 6 5 4 3 2 1
DIP SW   A:   H H H H H L H H     L:  ON
DIP SW   B:   H H H H H H H H     H:  OFF
SOUND CODE:   00
RAM OK
```

2. To test the game sounds, rotate the steering wheel to the right or left until the desired sound address appears next to the **SOUND CODE** display. Then press the START button to activate that sound.

E. TO EXIT THE SELF-TEST MODE

1. Turn Power OFF.

2. Locate Dip Switch Bank A on the main logic PCB and return switch #3 to the OFF position.

3. Turn Power ON.

SERVICE ACCESS DRAWER

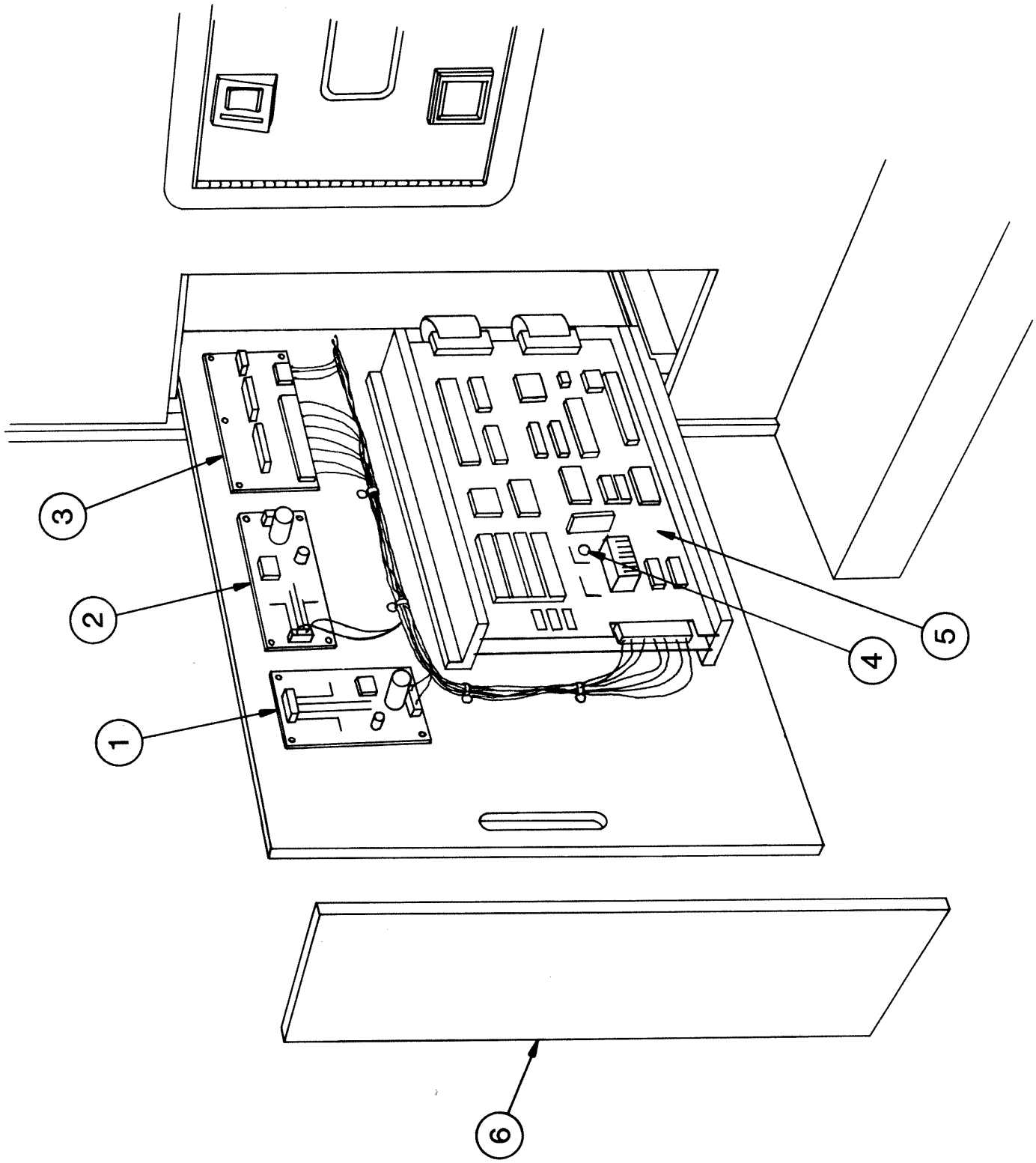

SERVICE ACCESS DRAWER ASSEMBLY
PARTS LIST

KEY	DESCRIPTION	REF NO.	PART NO.
1	AUXILARY POWER SUPPLY (AUDIO)		900-600102
2	AUXILARY POWER SUPPLY (MOTOR)		900-600102
3	F.C.C. FILTER PCB		900-150001
4	MASTER VOLUME CONTROL		
5	MAIN LOGIC PCB		210-100001
6	SERVICE ACCESS DOOR		

POWERHOUSE ASSEMBLY

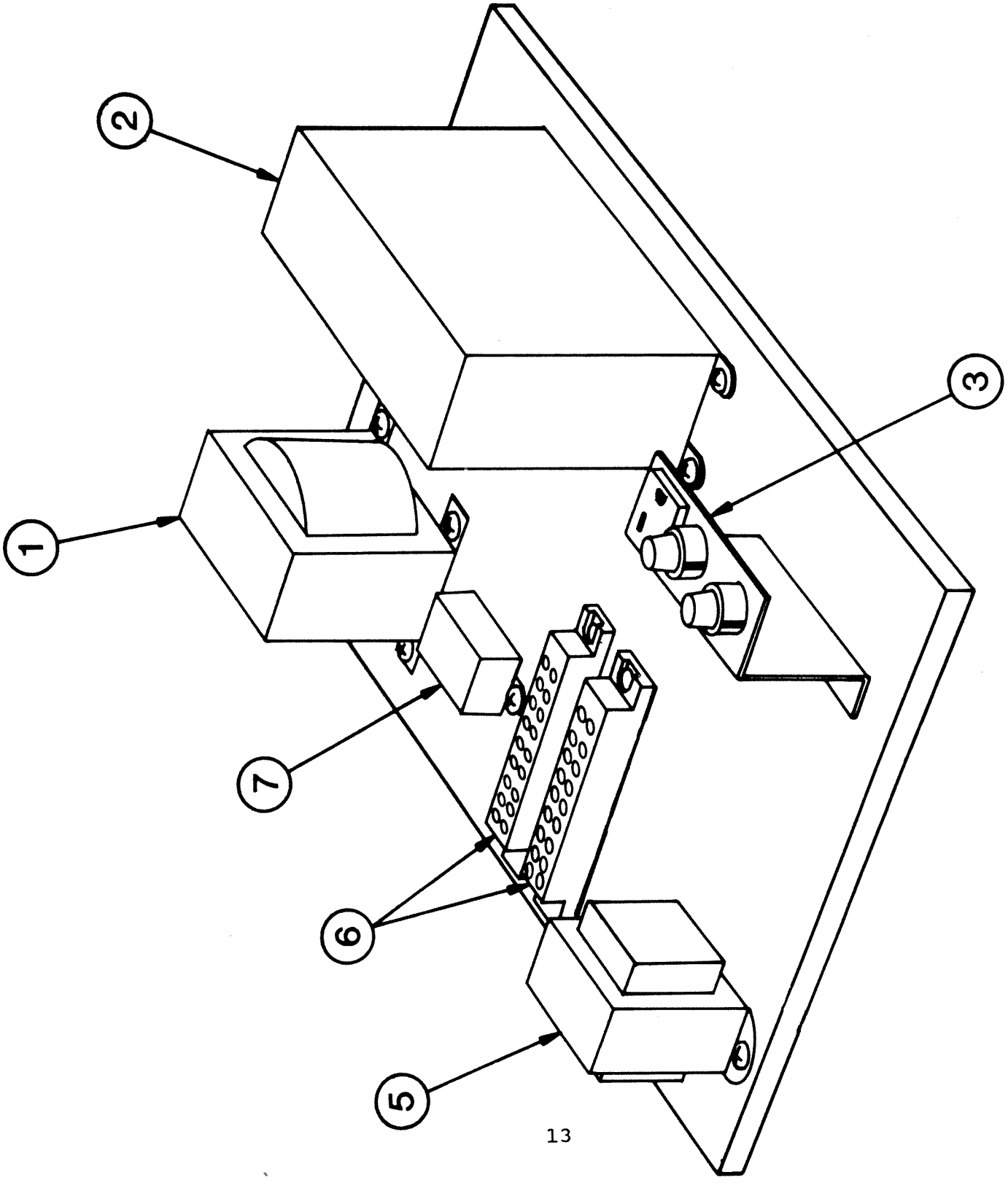

POWERHOUSE ASSEMBLY
PARTS LIST

KEY	DESCRIPTION	REF NO.	PART NO.
1	TRANSFORMER, ISOLATION		900-600201
2	POWER SUPPLY, 10 AMP SWITCHING		900-600101
3	SERVICE OUTLET AND FUSE ASSEMBLY	SEE BELOW	
	SERVICE OUTLET		900-600703
	FUSE HOLDER		900-600702
	FUSE, 3 AMP, 125VAC		900-601201
	SERVICE OUTLET & FUSE BRACKET		900-800503
5	TRANSFORMER, AUXILARY, 11VAC/18VAC	8911022	210-600202
6	TERMINAL BLOCKS, 9 POSITION		900-601301
7	LINE FILTER, 10 AMP		900-600502

OPTION DIP SWITCH SETTINGS

The following option switch settings were designed to allow the customizing of S.C.I.'s various game features to suit different environments. If used wisely, the flexibility they offer can maximize game performance and increase potential earnings.

DIP SWITCH A

FUNCTION	SETTING	1	2	3	4	5	6	7	8
GAME STYLE	COCKPIT ***UPRIGHT**	OFF **ON**							
NONE	MUST REMAIN IN "OFF" POSITION		**OFF**						
TEST MODE	***NORMAL** TEST			**OFF** ON					
ATTRACT SOUNDS	***ENABLED** DISABLED				**OFF** ON				
PLAY PRICING	1 CO = 1 PL ***2 CO = 1 PL** 3 CO = 1 PL 4 CO = 1 PL					OFF **ON** OFF ON	OFF **OFF** ON ON		
CONTINUE PRICING	SAME PRICING ***1 CO = CONT** 2 CO = CONT 3 CO = CONT							OFF **ON** OFF ON	OFF **OFF** ON ON

*** = FACTORY RECOMMENDED SETTINGS.**

CONTINUE PRICING - THIS SWITCH ALLOWS YOU TO PRICE THE "CONTINUED" GAME DIFFERENTLY THAN THE INITIAL GAME. AN EXAMPLE WOULD BE AN OPERATOR WHO ALLOWED HIS PLAYERS TO CONTINUE AT A DISCOUNTED RATE.
EXAMPLE: PLAY PRICING IS SET AT (2 COINS = 1 PLAY) AND THE CONTINUE PRICING AT (1 COIN = 1 PLAY). THE PLAYER PAYS THE FULL AMOUNT (2 COINS) TO BEGIN PLAYING, THEN PAYS ONLY HALF AS MUCH (1 COIN) TO CONTINUE HIS GAME. WHEN THE CONTINUE PRICING IS SET AT "SAME PRICING", THE CONTINUED GAME IS PRICED THE SAME AS THE INITIAL GAME.

DIP SWITCH B

FUNCTION	SETTING	1	2	3	4	5	6	7	8
DIFFICULTY LEVEL	***B - MEDIUM** A - EASY C - HARD D - HARDEST	**OFF** ON OFF ON	**OFF** OFF ON ON						
INITIAL TIMER	***60 SECONDS** 70 SECONDS 65 SECONDS 55 SECONDS			**OFF** ON OFF ON	**OFF** OFF ON ON				
NUMBER OF TURBOS	*** 3** 5					**OFF** ON			
STEERING RADIUS	270 DEGREE ***360 DEGREE**						OFF **ON**		
CONTINUE PLAY WITH DAMAGE	***NO** YES							**OFF** ON	
SIREN VOLUME	***NORMAL** LOW								**OF** ON

*** = FACTORY RECOMMENDED SETTINGS.**

FLUORESCENT LAMP & SPEAKER ASSEMBLY

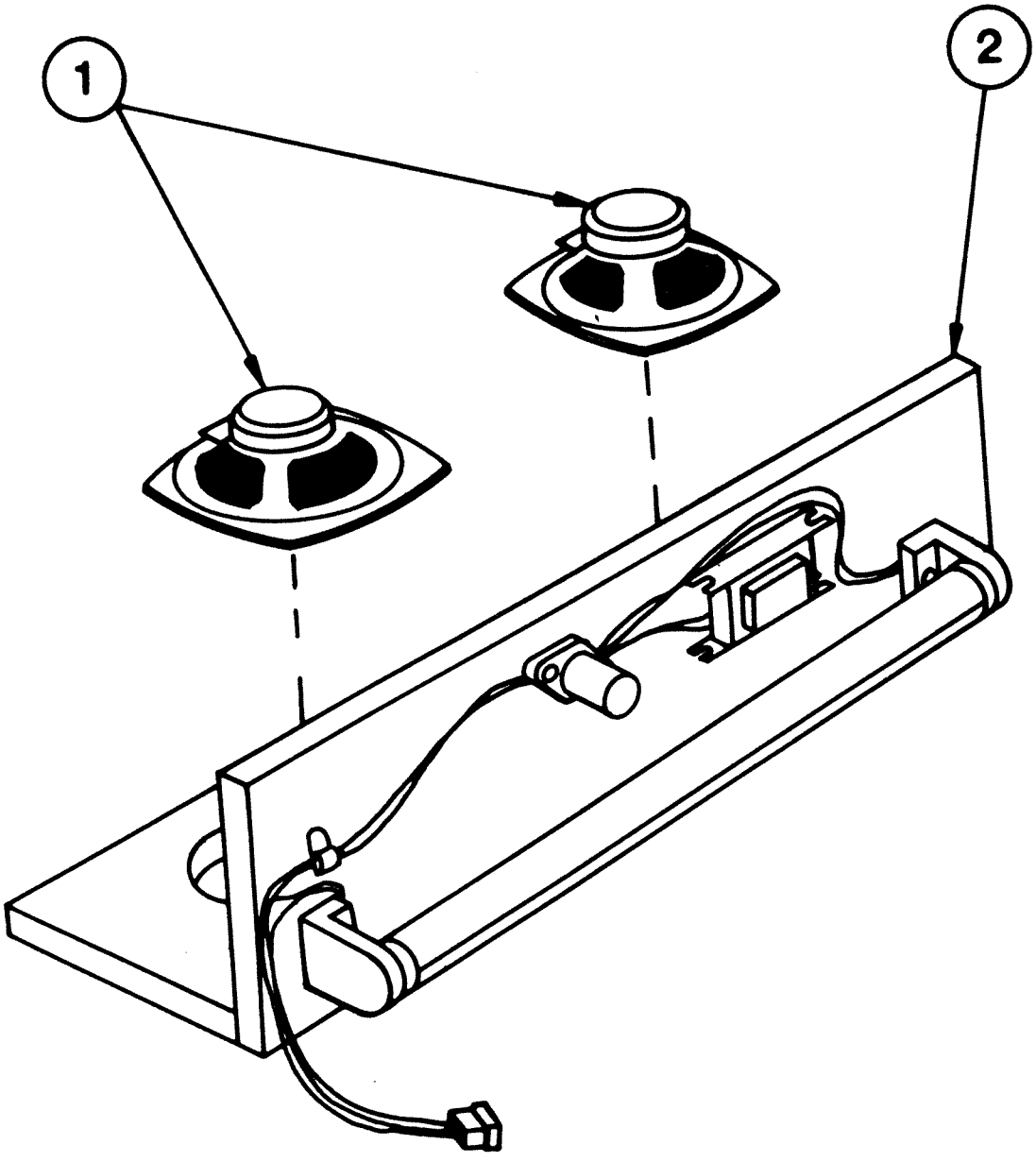

KEY	DESCRIPTION	REF NO.	PART NO.
1	SPEAKER, 4 INCH, 8 OHM		
2	FLUORESCENT LAMP ASSEMBLY		

GAS PEDAL ASSEMBLY
PARTS LIST

KEY	DESCRIPTION	REF NO.	PART NO.
1	PEDAL	50801900	
2	HEAVY DUTY LINK	50807700	
3	FACE PLATE & BRACKET ASSEMBLY		
4	SPRING FOR PEDAL	50804200	
5	SWITCH ACTUATOR		
6	MICRO-SWITCH	50801820	

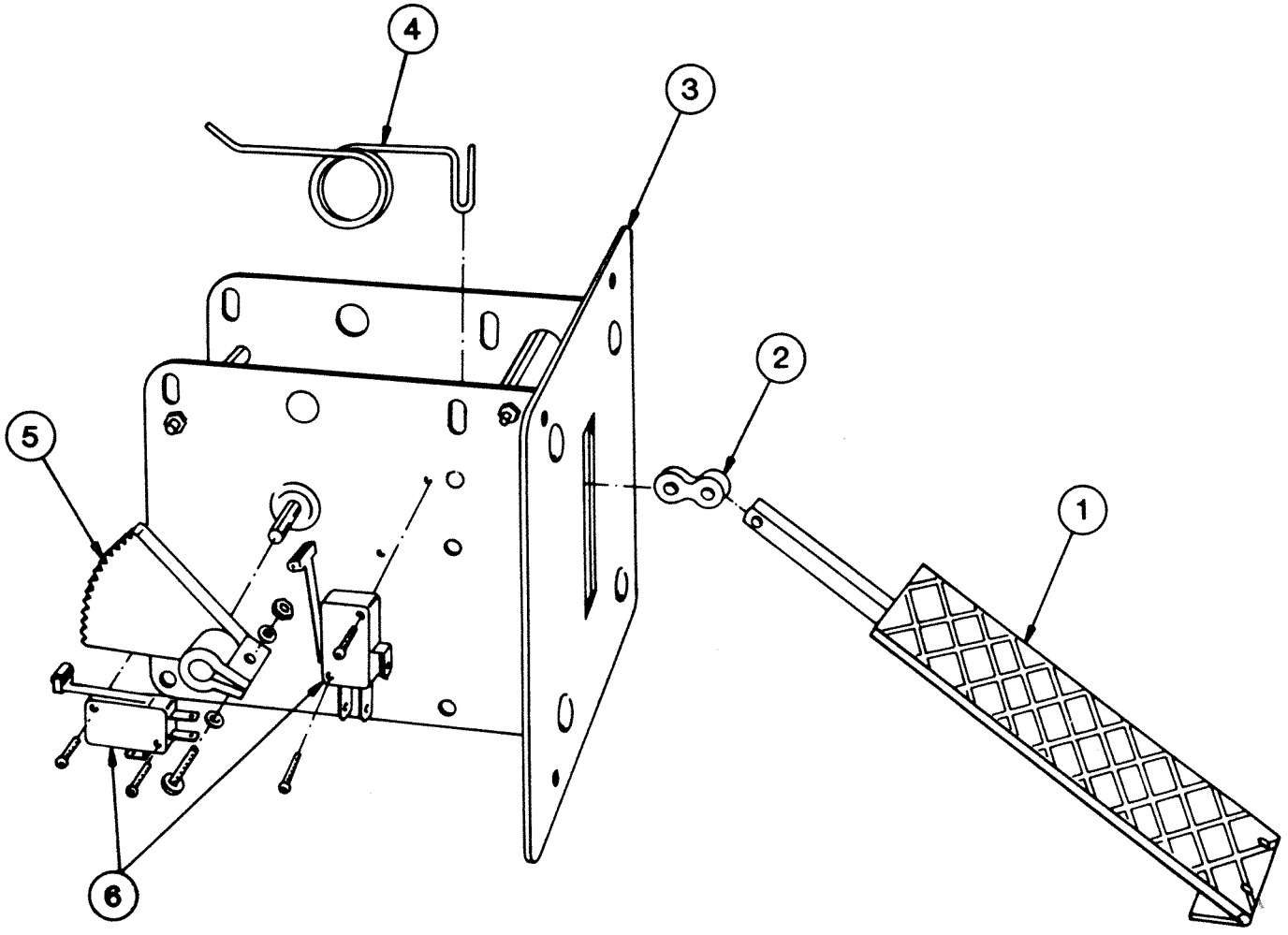

STEERING WHEEL ASSEMBLY

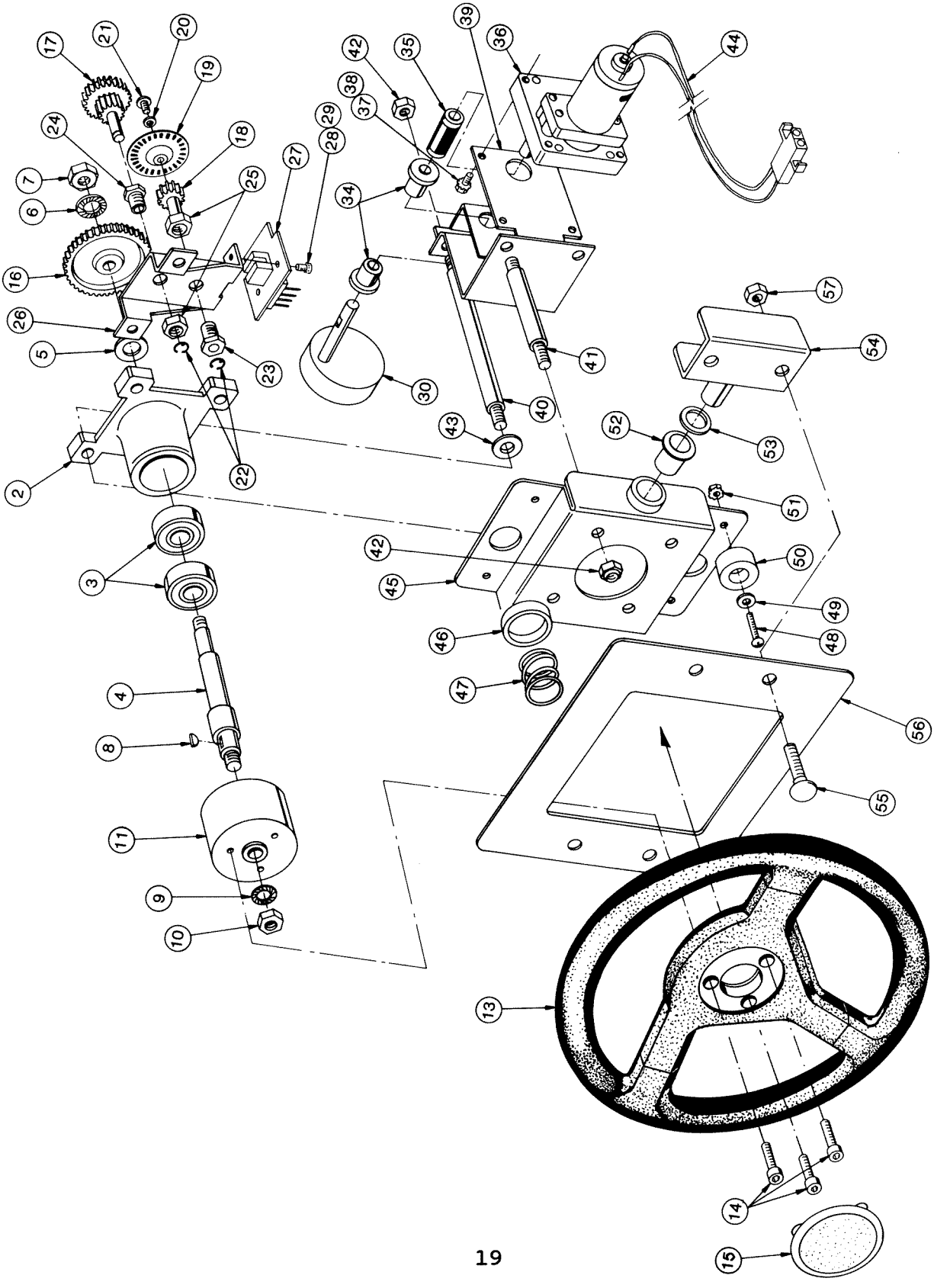

STEERING WHEEL ASSEMBLY
PARTS LIST

KEY	DESCRIPTION	REF NO.	PART NO.
2	CAST BEARING HOUSING	50812900	
3	BALL BEARINGS	50813000	
4	MAIN SHAFT	50808300	
5	FLAT WASHER M10	43003300	
6	LOCK WASHER M10	43003400	
7	NUT, M10	43003500	
8	KEY, WOODRUFF	50808400	
9	LOCKWASHER, M12	43003600	
10	NUT, M12	50808200	
11	HUB	50802700	
13	3 SPOKE WHEEL ONLY	50812500	
14	SOCK, HD. CAP SCR. M6 X 15	95803000	
15	CAP F/3 SPOKE WHEEL	50803100	
16	GEAR, 60 T, 1 MOD.	50831900	
17	CLUSTER GEAR & SHAFT 31 & 14 T, 1 MOD	50814000	
18	GEAR & SHAFT, 14 T, 1 MOD.	50814100	
19	ENCODER DISC, PLAT. 24 SLOT	50814200	
20	FENDER WASHER, #8	43099700	
21	PHIL. HD. MACH. SCR. M4 X 6	43003200	
22	E-RING, 4MM	43099600	
23	PANEL BUSHING, LONG	96609000	
24	PANEL BUSHING, SHORT	96609100	
25	NUT, JAM, 3/8-24	43098900	

STEERING WHEEL ASSEMBLY
PARTS LIST (CONT.)

KEY	DESCRIPTION	REF NO.	PART NO.
26	BRACKET, ENCODER MTG.	96602400	
27	P.C. BOARD ASSY.	A04910100	
28	PHIL. HD. MACH. SCR. 4-40 X 1/4 T. R.	95000300	
29	LOCKWASH, EXT. STAR, #4	43099300	
30	ECCENTRIC SHAFT ASSY.	50822500	
34	BUSHING, ECC. SHAFT	50820100	
35	COUPLING	50820200	
36	GEAR MOTOR	50818100	
37	HEX HD. MACH. SCR. 10-32 X 1/2	43000200	
38	LOCK WASHER EXT. STAR, #10	43003700	
39	BRKT. ASSY. SHAKER	50821000	
40	SUPP. COLUMN, LONG	96602800	
41	SUPP. COLUMN, SHORT	96602900	
42	LOCKNUT, NYLON, THIN, 3/8 UNC	43098700	
43	WASHER, 3/8" SAE	43000300	
44	HARNESS, MOTOR	50803600	
45	MOUNTING PLATE, MAIN HOUSING	96601800	
46	SPRING HOLDER	96601200	
47	SPRING	96601300	
48	PHIL. HD. MACH. SCR. 10-32 X 3/4	43099400	
49	WASHER, #10 SAE	43099500	
50	BUMPER	96601100	
51	NUT, KEP. 10-32	42009300	

STEERING WHEEL ASSEMBLY
PARTS LIST (CONT.)

KEY	DESCRIPTION	REF NO.	PART NO.
52	BUSHING	50820000	
53	SPACER WASHER	43098600	
54	MOUNTING TRUNNION	96601500	
55	CARR. BOLT. 5/16 X 1 1/4, BLK.	43098800	
56	FRONT PLATE	96610000	
57	LOCKNUT, NYLON, 5/16 UNC.	43099100	

GUN/SHIFTER ASSEMBLY

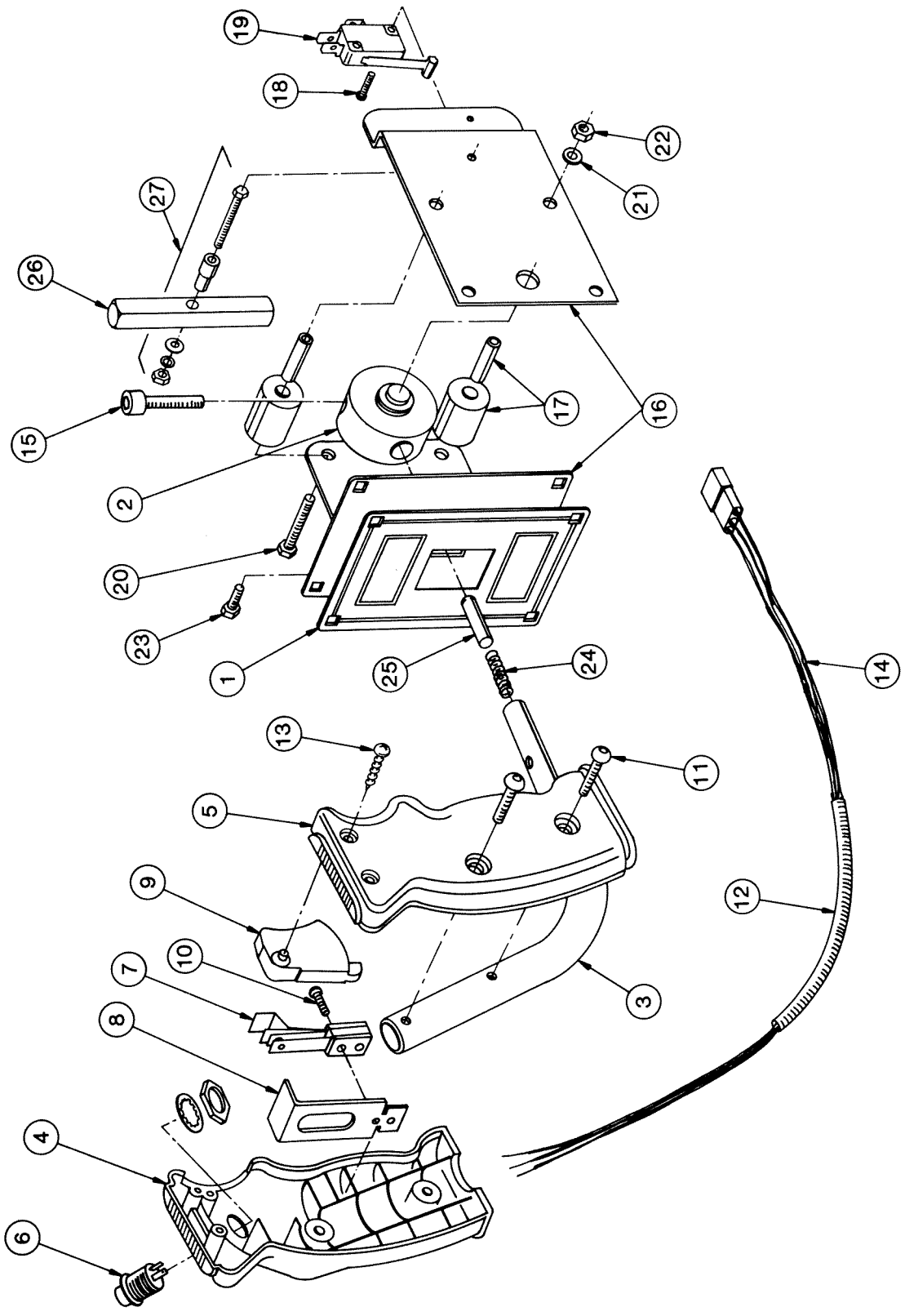

GUN/SHIFTER ASSEMBLY
PARTS LIST

KEY	DESCRIPTION	REF NO.	PART NO.
1	PLATE, SHIFTER, HIGH/LOW	50833900	
2	TRUNNION	96602200	
3	SHAFT & TUBE ASSY.	96609900	
4	R.H. GRIP INNER DRILLED	96251201	
5	R.H.GRIP OUTER	96251001	
6	SWITCH, PUSHBUTTON, SWITCHCRAFT #903	42009700	
7	TRIGGER SWITCH	96251400	
8	TRIGGER SWITCH BARCKET	96253000	
9	TRIGGER	96251500	
10	SCREWS #4-40 X 1/2 (TRIGGER BRKT.)	43099000	
11	SCREWS #10-32 X 3/8 B.H.T.P.	96251601	
12	SPRING, WIRE STRAIN RELIEF	50905000	
13	SCREWS #6 X 3/4 HI-LOW	96251900	
14	HARNESS	50834800	
15	1/4" - 20 X 1" S.H.C.S.	43099200	
16	FRAME, MAIN SHIFTER, W/WELDS		
17	BUMPERS W/SLEEVES	50801822	
18	SCREW, MACHINE M3 X 15MM		
19	MICROSWITCH	50801800	
20	SCREW, HEX HEAD CAP M6 X 35	43003000	
21	WASHER, RIBBED LOCK M6		
22	NUT, M6		
23	SCREW, HEX HEAD CAP M6 X 10		

GUN/SHIFTER ASSEMBLY
PARTS LIST (CONT.)

KEY	DESCRIPTION	REF NO.	PART NO.
24	SPRING, FOR SHIFTER PIN		
25	PIN, SHIFTER		
26	ACTUATOR BAR	50834200	
27	PIVOT PIN ASSY	50834400	

Notes

TAITO

TAITO AMERICA CORPORATION
660 S. Wheeling Road
Wheeling, IL 60090
Telephone (708) 520-9280
Fax (708) 520-1309