
Super
GEM
FIGHTER
MINI MIX
CAPCOM

HOW TO PLAY

JUMP
GUARD
MOVE LEFT
MOVE RIGHT
CROUCH
DASH
*When facing right

PUNCH
KICK
SPECIAL

THROW
NEAR THE OPPONENT

MEGA CRUSH
When cornered,

COUNTER ROLL
When blown away,

Push all 3 buttons simultaneously to get out of the trouble!
*Consumes the entire combo energy and releases all the gems at hand.

MIGHTY COMBO
Charges with each attack

1 Charge up the energy.

Find the Mighty Combo -commands to turn the tide!

ITEM THROW
When you get the item balls, push

ITEM BALLS

SPECIAL MOVE POWER-UP

1 Collect the gems and charge the meter.

2 When the meter reaches level 2, the corresponding special move becomes more powerful.

3 If the meter reaches level 3, super powerful special move becomes available!

BONUS GEMS

SUPER GEM — Charges all the special move meters and the combo meter!

POWER GEM — Charges one special move meter fully!

GUARD CRUSH
Push S for the Guard Crush move!

If it hits the opponent, you can take the gems from your opponent!

The Guard Crush move can be charged!

TIPS Charge longer and you can take more gems from the opponent!

GUARD CRUSH COUNTER
Counter the opponent's Guard Crush move!

COSTUME COMBO

It's OK to be blocked!
When your standing punch contacts the opponent,

Push and in a combination you like!

PUNCH!

Your character's move and costume change based on the button combination!

SUPER GEM FIGHTER

CAPCOM®

©CAPCOM CO.,LTD.1997 ALL RIGHTS RESERVED.

PCF979A03-1

RYU



SPECIAL MOVE POWER-UP	
Hadou-Ken	
Shouryuu-Ken	
Tatsumaki-Senpuu-Kyaku	

KEN



SPECIAL MOVE POWER-UP	
Hadou-Ken	
Shouryuu-Ken	
Tatsumaki-Senpuu-Kyaku	

SAKURA



SPECIAL MOVE POWER-UP	
Hadou-Ken	
Shouou-Ken	
Shunka-Shuutou	

CHUN-LI



SPECIAL MOVE POWER-UP	
Kikou-Ken	
Hishou-Kyaku	
Lightning-Kick	PUSH RAPIDLY

ZANGIEF



SPECIAL MOVE POWER-UP	
Spinning Pile Driver	+
Spinning Lariat	+ S
Glowing Fist	

MORRIGAN



SPECIAL MOVE POWER-UP	
Soul Fist	
Shadow Blade	
Parasite Roll	

HSIEN-KO



SPECIAL MOVE POWER-UP	
Weapon Throw	
Reflect Gong	
Jireitou	

FELICIA



SPECIAL MOVE POWER-UP	
Sand Splash	
Rolling Punch	
Delta Kick	

TESSA



SPECIAL MOVE POWER-UP	
Dragon Blow	
Reverie Sword	
Dragon's Roar	

IBUKI



SPECIAL MOVE POWER-UP	
Kunai-Dagger	
Kazakiri	
Hien	

SUPER GEM FIGHTER

CAPCOM ©CAPCOM CO., LTD. 1997 ALL RIGHTS RESERVED.

PCF979A03-2



© CAPCOM CO., LTD. 1997 ALL RIGHTS RESERVED
© CAPCOM U.S.A., INC. 1997 ALL RIGHTS RESERVED

OPERATORS MANUAL

WARNING

This game is [illegible] United States of America and Canada. [illegible] rt or operation outside of these count[illegible] constructed as copyright and trademark infringements and is strictly prohibited. Violators are subject to severe penalties and will be prosecuted to the full extent of the law.

CAPCOM® COIN-OP, INC.
475 Oakmead Parkway
Sunnyvale, CA 94086
Phone: (408) 774-0500
Fax: (408) 522-5331

PM00202
092397

THANK YOU FOR PURCHASING *"Super GEM Fighter™"*. WE INVITE YOU TO USE THE FOLLOWING MAILING ADDRESS, TELEPHONE OR FAX NUMBER FOR PARTS OR SERVICE INFORMATION CONCERNING THIS GAME:

CAPCOM® COIN-OP, INC.
ATTN: CUSTOMER SERVICE
475 OAKMEAD PARKWAY
SUNNYVALE, CA 94086
PHONE: (408) 522-5325
FAX: (408) 522-5331

THE SERIAL NUMBERS OF YOUR KIT ARE LOCATED ON THE GAME CARTRIDGES AS SHOWN BELOW. PLEASE HAVE THESE SERIAL NUMBERS AVAILABLE WHEN CONTACTING US FOR SERVICE INFORMATION.

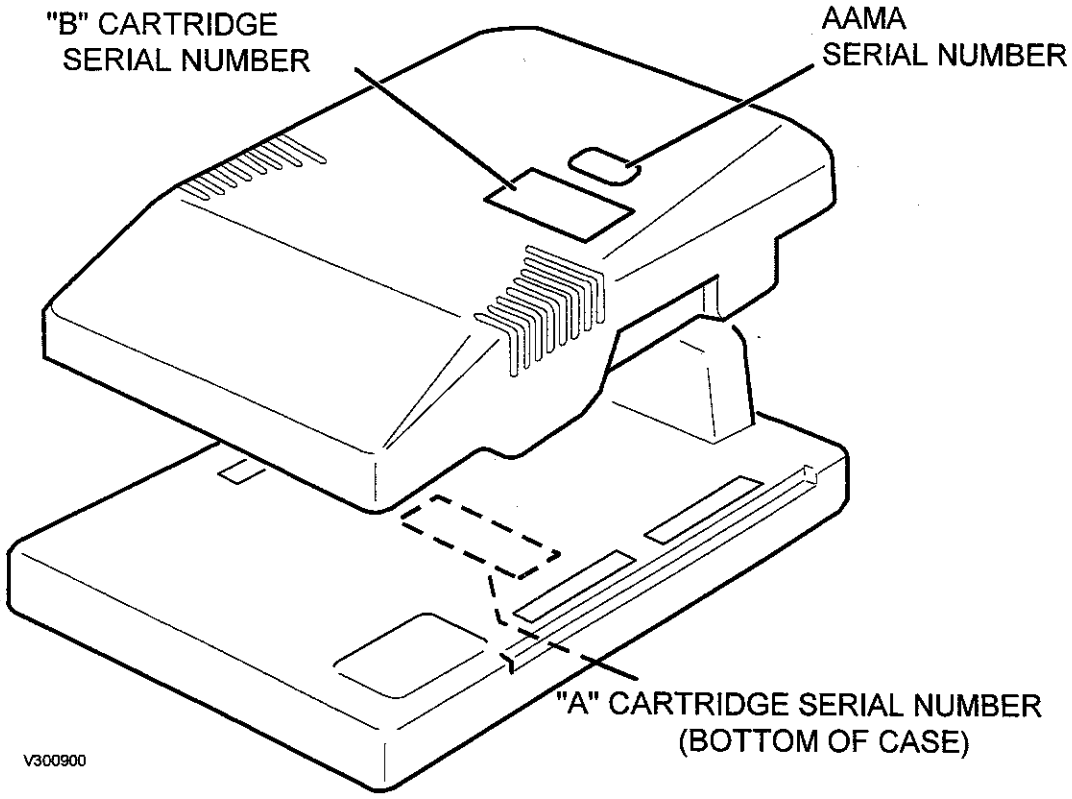

DEPENDING ON THE TYPE OF KIT YOU PURCHASED, PLEASE RECORD THE SERIAL NUMBERS HERE:

"FULL" KIT
A-CARTRIDGE SERIAL # _____
B-CARTRIDGE SERIAL # _____
AAMA SERIAL # _____

"B" KIT
B-CARTRIDGE SERIAL # _____
AAMA SERIAL # _____

Proprietary and confidential information, not to be disclosed or copied without the express permission of CAPCOM® COIN-OP, INC.

TABLE OF CONTENTS

Table of Contents i

Warranty Information ii

Kit Inspection 1

Caution 2

"FULL" Kit , "B" Kit
- Preparation 3
- Installation 3,4
  - Control Panel Overlay 3
  - Cabinet Graphics 3
  - Re-assembly of Components 4
  - Remote Volume/Test Switch 4
  - Control Panel Wiring 4
  - Game Cartridges 5

Test Mode
- Test Menu 6
  - Accessing the Menu 6
  - How to Select an Item 6
  - Closing the Menu 6
  - Menu Item Descriptions 6
  - Configuration Menu 7
  - System Configuration 8
  - Game Configuration 9

Wiring References
- JAMMA Connections 10
- Auxiliary Cable Connections 10

Reference Information ..... Inside of Back-cover
- Game Case Controls and Connectors
- Typical Control Panel Layout

Proprietary and confidential information, not to be disclosed or copied without the express permission of CAPCOM® COIN-OP, INC.

LIMITED PRODUCT WARRANTY
(APPLIES TO DOMESTIC SALES ONLY)

CAPCOM® COIN-OP, INC. (Seller), warrants only to the initial purchaser of its products, that the items listed below are free from defects in material and workmanship under normal use and service for the warranty periods specified:

A. CPS II System Cartridges	One (1) Year
B. Electronic and Mechanical Components:	(90) days

No other part of Seller's products are warranted.

Warranty periods are effective from the initial date of shipment from seller to its authorized distributors.

Seller's sole liability shall be, at its option, to repair or replace products which are returned to Seller during the warranty periods specified, provided:

A. Seller is notified promptly upon discovery by buyer that stated products are defective;

B. Such products are properly packaged and then returned, prepaid to Seller's designated plant.

This warranty does not apply to any parts damaged during shipment or handling, or due to improper installation or usage, or alteration. In no event shall Seller be liable for any anticipated profits, loss of profits, loss of use, incidental or consequential damages or any other losses incurred by the customer in connection with the purchase of a CAPCOM® COIN-OP, INC. product.

WARRANTY DISCLAIMER

EXCEPT AS SPECIFICALLY PROVIDED IN A WRITTEN CONTRACT BETWEEN SELLER AND PURCHASER, THERE ARE NO OTHER WARRANTIES, EXPRESSED OR IMPLIED, INCLUDING ANY IMPLIED WARRANTIES OF MERCHANTABILITY OR FITNESS FOR A PARTICULAR PURPOSE.

IMPORTANT NOTICE

THIS SHIPMENT HAS BEEN CAREFULLY INSPECTED AND PROPERLY PACKAGED BEFORE LEAVING THE FACTORY. WE CANNOT ASSUME RESPONSIBILITY FOR BREAKAGE THAT MAY OCCUR DURING TRANSPORTATION OF THE GAME. IF THIS GAME IS DAMAGED UPON RECEIPT FROM THE CARRIER, IMMEDIATELY NOTIFY THE CARRIER AND FILE A DAMAGE REPORT.

Proprietary and confidential information, not to be disclosed or copied without the express permission of CAPCOM® COIN-OP, INC.

KIT INSPECTION

There are two kits available for conversion to ***Super GEM Fighter™*:**

1) **GEM1000** ("FULL" kit) contains the complete game cartridges, all necessary graphics, and replacement joysticks and button switches. The "FULL" kit is intended for conversion of most JAMMA-compatible, horizontal screen cabinets.

2) **GEM 1000B** ("B" kit) contains the game software cartridge (B-cartridge) and must also be installed to a current CAPCOM® System II game. It includes all the necessary game graphics for a cabinet conversion (marquee, control panel overlay, monitor card, etc.).

Check that all parts have been shipped with your kit. If any parts are missing, contact your distributor immediately.

KIT PARTS LIST

GEM1000	GEM1000B	PART NO.	DESCRIPTION	QTY
√		GEM1400	CPS II System Cartridges (A/B)	1
	√	GEM1400B	CPS II System Cartridge (B)	1
√	√	GE1200	Monitor Card	1
√	√	PL00376	Clear Plexi for Marquee	1
√	√	AW00258	Marquee	1
√	√	AW00216	Overlay, Control Panel	1
√	√	AW00259	Decal, Joystick & Button Switches	1
√	√	AW00147	Decal, Cabinet Side	2
√	√	AW00260	Decal - Top, Instruction	1
√	√	AW00261	Decal - Bottom., Instruction	1
√	√	PM00202	Manual, Operators	1
√		GE2030	Joystick, 8-way	2
√		16-0130	Switch, 1-Player Start Button (White)	1
√		16-0131	Switch, 2-Player Start Button (White)	1
√		16-0133	Switch, Button (Red)	2
√		16-0134	Switch, Button (Blue)	2
√		16-0136	Switch, Button (Green)	2
√		MS00151	Button Plug	6
√		03-0052	Cable, Auxiliary Volume/Test	1
√		13-0066	Bracket, A-Cartridge Mounting	4

Proprietary and confidential information, not to be disclosed or copied without the express permission of CAPCOM® COIN-OP, INC.

CAUTION

Please read the following instructions to keep the PC board in good condition:

- ♦Do not block the ventilation slots.
- ♦Do not drop or bump the board.
- ♦Do not spill any liquids on the case.
- ♦Do not disassemble the case.

ATTENTION

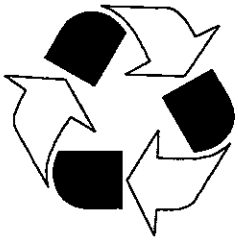

The product that you have purchased contains a recyclable battery. At the end of its useful life, under various state and local laws, it may be illegal to dispose of this battery into the municipal waste system. Check with your local solid waste official for details in your area for recycling options or proper disposal.

DISASSEMBLING THE CASE OR REMOVING THE STICKER MAY CAUSE THE TERMINATION OF YOUR REPAIR WARRANTY.

Proprietary and confidential information, not to be disclosed or copied without the express permission of CAPCOM® COIN-OP,

KIT INSTALLATION

WARNING:

MAKE SURE ELECTRICAL POWER TO THE GAME IS OFF BEFORE STARTING THE KIT INSTALLATION.

PREPARATION

1. Disconnect and remove the old printed circuit board(s) from the cabinet.

2. Remove or open the control panel, and disconnect and remove the buttons and joystick(s) from the control panel.

3. Remove any covering from the control panel overlay, and then remove the control panel overlay.

4. Place the drill hole template over the control panel to determine where any new holes should go. Center punch any needed new holes on the control panel.

5. Cut out the new holes using a 1-3/16" hole saw.

6. If there is an additional control panel cover, figure 1 (such as plastic or lexan) that will be utilized, cut any additional holes using the same template.
*cover is not included in the kit.

7. Plug up unused holes with a wood dowel (1-1/8" diameter) and sand any rough edges.

INSTALLATION

Marquee Installation

8. Remove the marquee plexi glass, marquee overlay, and the cabinet graphics.

9. Install the new marquee and replace the plexi glass. Clear plexi glass is included in "full" kit.

Control Panel Overlay Installation (See Figure 1)

10. The control panel overlay in the kit is oversized to accommodate most control panel sizes. Center the overlay on the control panel, leaving some excess material at the edges.

11. Remove the protective backing from the overlay and press it down on the control panel, keeping it properly aligned. Press it down firmly, smooth out any bubbles, and press it over the edges.

12. Trim any excess from the overlay. Place the drill hole template on top of the overlay, aligning it with the joystick holes. Pierce through the overlay at each control panel hole. Then, cut away overlay material covering the joystick and button holes. Remove the template and clean off the overlay.

13. Peel off the backings of the 6-button and joystick decals, align over the control panel holes, and press in place on the overlay (refer to the drill hole template for proper placement). Using a knife, trim material from the center hole of the joystick decal.

14. Install the control panel cover, figure.1. (if required).

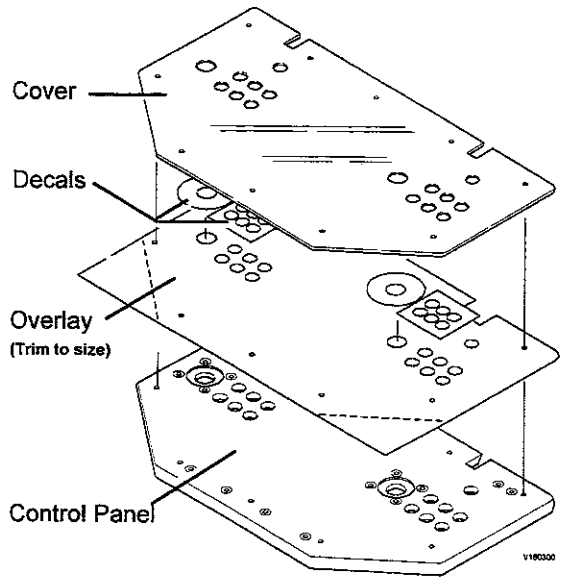

Figure 1: Overlay Installation

CABINET DECAL INSTALLATION

19. Remove monitor glass and install monitor card

20. Peel-off the backing to the instruction decals and place on both the top and bottom of the monitor card. (See Figure 5). Also, apply the cabinet decals to both sides of the cabinet.

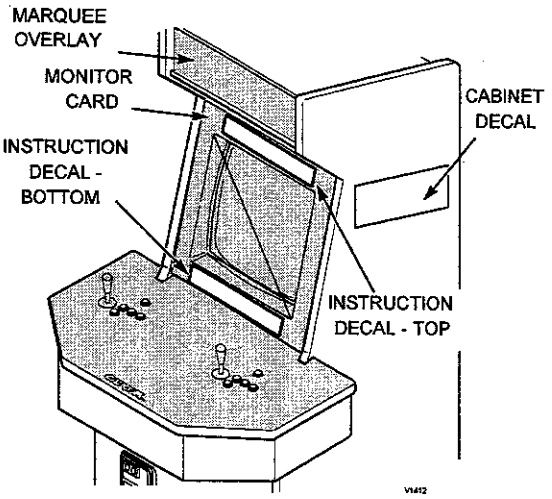

Figure 5: Cabinet Decal Installation

Proprietary and confidential information, not to be disclosed or copied without the express permission of CAPCOM® COIN-OP.

Re-assembly of Components

15. Notice that there are two white buttons. See figure 2. The WHITE buttons are START buttons. Install the PLAYER ONE button on the top left-hand side of the control panel, and the player two button on the top right-side of the control panel.

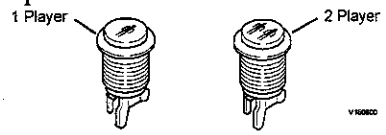

Figure 2: Start Buttons

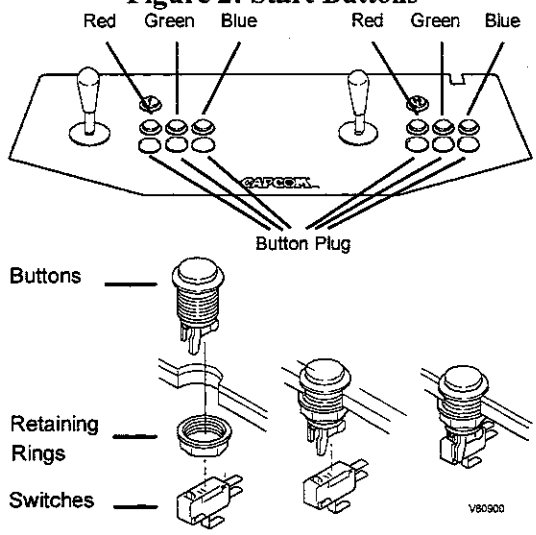

Figure 3: Control Panel Buttons and Switches

16. Install all buttons and retaining rings on the control panel as shown in Figure 3. Install one red buttons to the immediate right of each joystick, install one green buttons to the right of the red ones, and install one blue buttons to the right of the green ones.

17. Install the switches on the buttons as shown in figure 3. Orient the switches so that when a button is pressed, the plastic contact on the switch is depressed.

18. Install the joysticks on the control panel as shown in figure 4.

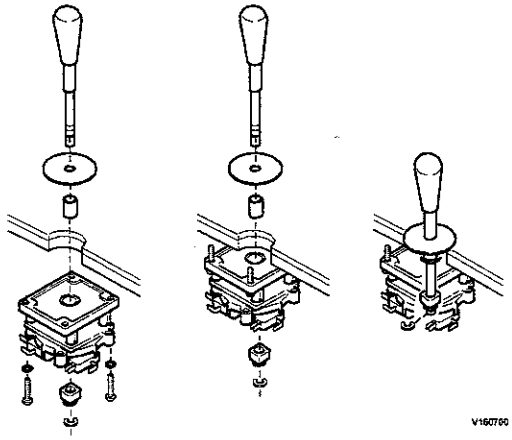

Figure 4: Joystick Installation

CONTROL PANEL WIRING

NOTE: all switch wires used in this game must be wired to the normally-open connection on the switches. Each switch requires a ground wire on the common connector and the appropriate control or switch wire on the normally-open connector of the switch.

21. Reconnect the existing JAMMA connectors to the control panel according to the chart in table 1.

22. Auxiliary cable harness have extra cables. For this game kick harness are not used. Leave cables not connected and make sure unused cables are isolated.

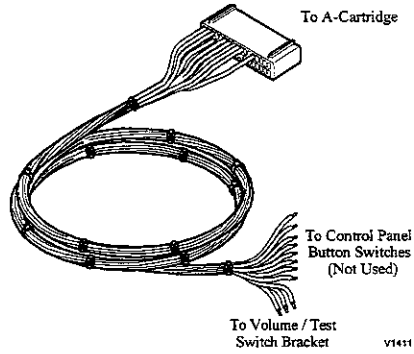

Figure 6: Auxiliary Cable Harness

TEST SWITCH WIRING

23. Your cabinet may already equipped test switch. An optional test/volume bracket (see Figure 7) is available through your local CAPCOM distributor (part number 03-0050). When installing, the test switch bracket should be mounted inside the coin door and on top of the cash box for easy access. (See Page 7 for wiring detail)

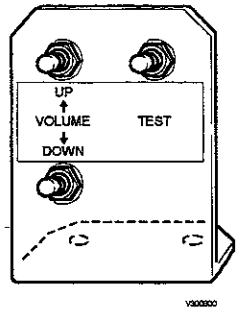

Figure 7: Test/Volume Bracket

24. If you are converting a cabinet that is equipped with CAPCOM® Q-SOUND, you may use stereo audio output connect to existing Q-SOUND POWER AMPLIFIER.

Proprietary and confidential information, not to be disclosed or copied without the express permission of CAPCOM® COIN-OP,

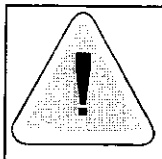

CAUTION

IMPROPER INSTALLATION OF THE *JAMMA* HARNESS TO THE GAME CARTRIDGE WILL CAUSE DAMAGE TO THE ENCLOSED PCB.



WARNING

DISASSEMBLY OF EITHER GAME CARTRIDGE WILL VOID YOUR WARRANTY.

GAME CARTRIDGE INSTALLATION

"FULL" KIT

20. Install the four (4) mounting brackets to the underside of the "A" cartridge as shown in Figure 10.

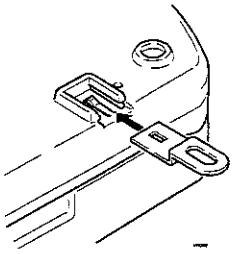

Figure 10: Mounting Bracket Installation

"FULL" KIT

21. Using the supplied wood screws, fasten the game cartridge case to the control panel shelf, as shown in Figure 11.

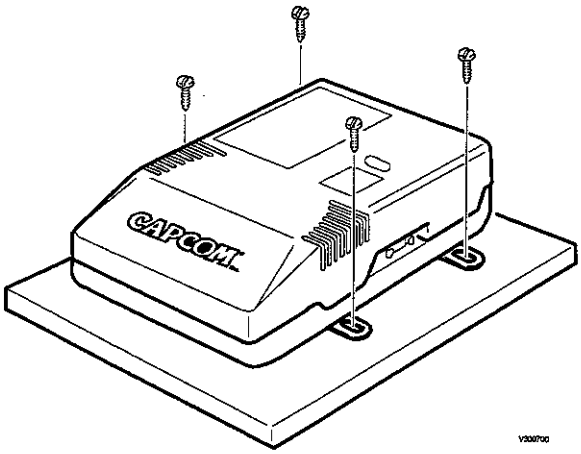

Figure 11: Case Mounting

22. Connect the JAMMA harness connector and the auxiliary cable connector to the "A' cartridge. If your cabinet is equipped with Q-SOUND, also attach the audio cables.

"B" KIT

15. To remove the existing "B" cartridge from the "A" cartridge, pull the old case clamps apart (see Figure 12). Carefully remove the old "B" cartridge and install the new "B' cartridge.
Re-install the case clamps.

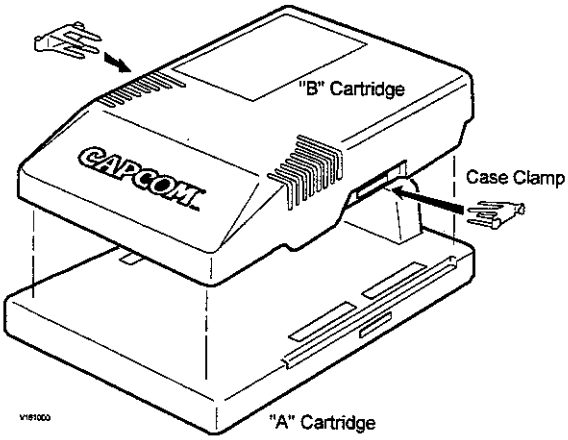

Figure 12 : Case Clamp Installation

23. Power-up the game and set all operator adjustable options by pressing the **TEST** switch. Follow the instructions under the ***TEST MENU*** section of this manual.

Proprietary and confidential information, not to be disclosed or copied without the express permission of CAPCOM® COIN-OP, INC.

TEST MENU

The test menu allows you to test the functions and configure the game. These items include input devices such as joysticks, buttons and coin door or switches, output devices such as monitor, speakers and meters. Through the Test Menu you can also access the Configuration Menu, where you can change the settings of the game.

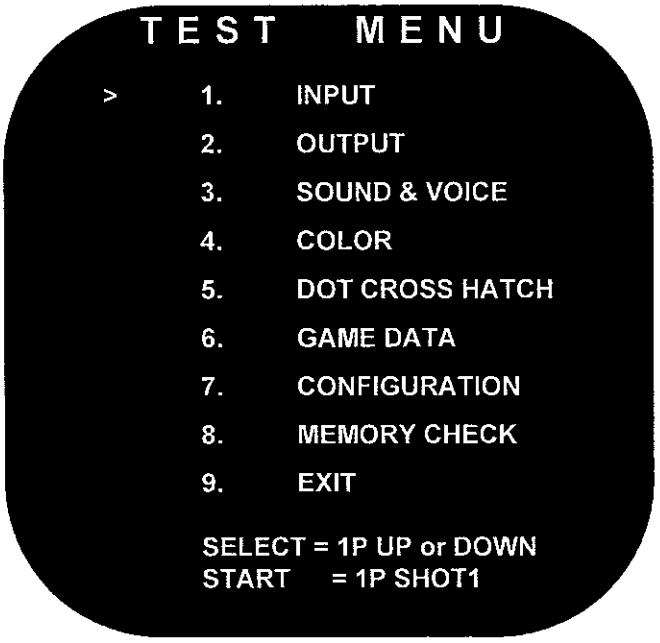

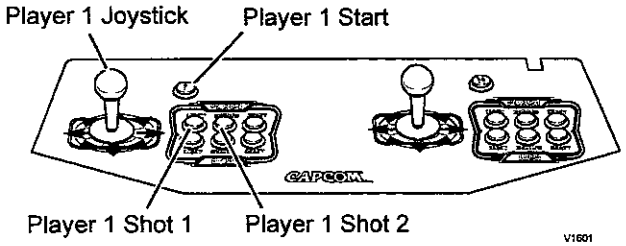

1. ACCESSING THE TEST MENU

- **For a CAPCOM® cabinet, or a cabinet with a test switch:**

Make sure the game is on and push the test switch. The screen shown left will appear.

- **For a cabinet without a test switch:**

Push the blue test switch on the outside of the black plastic casing.
Refer to the inside back cover of the manual.

2. HOW TO SELECT AN ITEM

- Use the *PLAYER 1 JOYSTICK* to move the arrow in front of the desired item and press the *PLAYER 1 SHOT 1* button, as shown below in various control panel configurations:

3. CLOSING THE TEST MENU

To close the Test Menu, highlight **"9. EXIT"** and push the *PLAYER 1 SHOT 1* button.

- To return to the test menu, push the *PLAYER 1 START* and *PLAYER 1 SHOT 1* buttons simultaneously.
- The test menu will always return to the screen:

a) After you exit the **"7. CONFIGURATION MENU"** and
b) After the memory is tested from the menu, **"8. MEMORY CHECK"**.

4. TEST MENU ITEM DESCRIPTIONS

INPUT	Used to test all the input switches, such as joysticks and buttons. The "0" changes to a "1" as the button is pushed or joystick is moved. Check connections and switches in case the "0" doesn't change to a "1" when depressed or moved.
OUTPUT	Used to test the coin meter and the coin lock.
SOUND & VOICE	Select a code of **SOUND** or **VOICE** with the *PLAYER 1 JOYSTICK*. Push the *PLAYER 1 SHOT 1* button to hear the sound of the selected code.
COLOR	Shows color bars of red, green, blue, and white. Adjust **RGB** and brightness to obtain the optimum color balance and solid black background.
DOT CROSS HATCH	Used to test the screen size, focus and distortion.
GAME DATA	Coin meter and Free play information will be displayed.
CONFIGURATION	Used to change the game play settings. Refer to the **CONFIGURATION MENU** section.
MEMORY CHECK	Used to test memory. **"OK"** appears when each block of memory passes test, **"NG"** appears in case of malfunction. If **"NG"** appears, repeat the memory test and wait for the **"OK"** message. Contact your distributor if **"NG"** still appears.
EXIT	Select this item and push the *PLAYER 1 SHOT 1* button to return to game play mode.

Proprietary and confidential information, not to be disclosed or copied without the express permission of CAPCOM® COIN-OP,

CONFIGURATION MENU

The Configuration Menu is used to change various game settings such as level difficulty, credits, sound configuration, etc. These settings are stored in memory on the PCB.

The Configuration Menu is divided into 2 sections. In the **SYSTEM** section, you can change credits, sound, and coin door configurations. In the **GAME** section, you can change the play difficulty level and duration of the game.

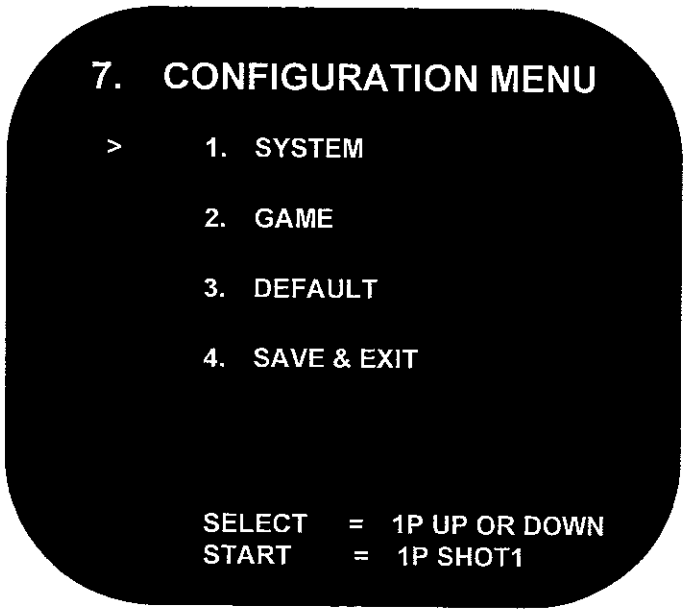

1. ACCESSING THE CONFIGURATION MENU

- From the TEST MENU, move the arrow to **"7. CONFIGURATION"** and push the *PLAYER 1 SHOT 1* button. The screen left will be displayed. A description of each option is explained in the table below.

5. CONFIGURATION MENU ITEM DESCRIPTIONS

SYSTEM	Select this item to change settings for credits, monitor flip, sound and coin door configurations.
GAME	Select this item to change difficulty level, damage level, time count speed, maximum number of rounds and event type.
DEFAULT	Use this item to restore configuration settings to the original factory values. Press the *PLAYER 1 SHOT 1* and *PLAYER 1 SHOT 2* buttons at the same time to restore default values.
SAVE & EXIT	Use this to save new configuration settings and exit to the Test Menu. The message "SAVING NEW CONFIGURATION IN EE-PROM" will appear while the new settings are being saved. **DO NOT** turn power off to the game until "SAVING" is complete and the Test Menu reappears.

Proprietary and confidential information, not to be disclosed or copied without the express permission of CAPCOM® COIN-OP, INC.

SYSTEM CONFIGURATION

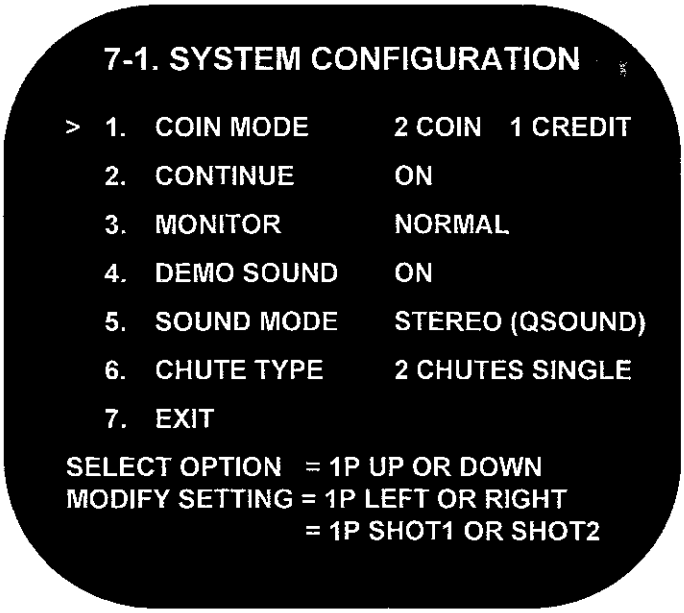

CHANGING THE SYSTEM CONFIGURATION SETTINGS

Move the *PLAYER 1 JOYSTICK* up or down to highlight the desired option. Once the option is highlighted, move the *PLAYER 1 JOYSTICK* left or right or press the *PLAYER 1 SHOT 1* button to select.

SYSTEM CONFIGURATION ITEM DESCRIPTIONS

1. COIN MODE	SELECT THE CHARGE PER PLAY.
2. CONTINUE	SELECT **ON** FOR CONTINUOUS PLAY OR **OFF** FOR NON-CONTINUOUS PLAY.
3. MONITOR	FLIPS THE POSITION OF THE SCREEN. IF THE SCREEN APPEARS UPSIDE-DOWN, CHANGE THE SETTING TO **FLIP;** IF THE SCREEN APPEARS CORRECT, SELECT **NORMAL.**
4. DEMO SOUND	TURNS ATTRACT SOUNDS ON OR OFF.
5. SOUND MODE	SELECT **STEREO** OR **MONAURAL** FOR USE WITH YOUR CABINET. NOTE: **STEREO** SHOULD ONLY BE SELECTED FOR USE WITH CAPCOM® QSOUND CABINETS.
6. CHUTE TYPE	SELECT THE NUMBER OF PLAYER(S) AND COIN CHUTE TYPE.
7. EXIT	TO SAVE THE SETTINGS AND RETURN TO THE CONFIGURATION MENU, HIGHLIGHT THIS ITEM AND PUSH EITHER THE *PLAYER 1 SHOT 1* BUTTON OR THE *PLAYER 1 SHOT 2* BUTTON.

SYSTEM CONFIGURATION OPTION SETTINGS

1. COIN MODE	1 COIN 1 CREDIT	1 COIN 2 CREDITS	1 COIN 3 CREDITS	1 COIN 4 CREDITS	1 COIN 5 CREDITS
	1 COIN 6 CREDITS	1 COIN 7 CREDITS	1 COIN 8 CREDITS	1 COIN 9 CREDITS	**2 COINS 1 CREDIT**
	3 COINS 1 CREDIT	4 COINS 1 CREDIT	5 COINS 1 CREDIT	6 COINS 1 CREDIT	7 COINS 1 CREDIT
	8 COINS 1 CREDIT	9 COINS 1 CREDIT	2 COINS START 1 COIN CONTINUE	FREE PLAY	
2. CONTINUE	**ON**	OFF			
3. MONITOR	**NORMAL**	FLIP			
4. DEMO SOUND	**ON**	OFF			
5. SOUND MODE	**STEREO (Q SOUND)**	MONAURAL			
6. CHUTE TYPE	**2 CHUTES SINGLE**	2 CHUTES MULTI	1 CHUTE SINGLE		

NOTE: **FACTORY SETTING**

Proprietary and confidential information, not to be disclosed or copied without the express permission of CAPCOM® COIN-OP,

GAME CONFIGURATION

```
7-2.  GAME CONFIGURATION
>  1.  DIFFICULTY      NORMAL
   2.  DAMAGE LEVEL    NORMAL
   3.  TIMER SPEED     NORMAL
   4.  GAME SPEED      FREE SELECT
   5.  MAX ROUND       1 ROUND
   6.  EVENT           OFF
   7.  JOIN-IN         ON
   8.  EXIT

   SELECT OPTION       = 1P UP OR DOWN
   MODIFY SETTINGS     = 1P LEFT OR RIGHT
                         1P SHOT1 OR SHOT
```

CHANGING THE GAME CONFIGURATION SETTINGS

Move the *PLAYER 1 JOYSTICK* up or down to highlight the desired option. Once the option is highlighted, move the *PLAYER 1 JOYSTICK* left or right or press the *PLAYER 1 SHOT 1* button to select.

ITEM	DESCRIPTION	OPTION SETTINGS			
1. DIFFICULTY	SETS THE GAME DIFFICULTY LEVEL	EASY	NORMAL	HARD 1	HARD 2
		HARD 3	HARD 4	HARD 5	EXPERT
2. DAMAGE LEVEL	SETS THE OFFENSIVE POWER LEVEL.	LOW	NORMAL	HIGH	MAXIMUM
3. TIMER SPEED	SETS THE SPEED OF COUNTDOWN FROM THE TIMER DISPLAY.	SLOW	NORMAL	FAST	FASTEST
4. GAME SPEED	SET THE GAME SPEED. "TURBO 1" AND "TURBO 2" ALLOWS THE OPERATOR TO SET THE GAME SPEED.	TURBO 1	TURBO 2	TURBO 3	TURBO 4
	"FREE SELECT" ALLOW THE PLAYER SELECT THE GAME SPEED	FREE SELECT			
5. MAX ROUND	USED TO SET THE NUMBER OF ROUNDS PER MATCH.	1 ROUND	3 ROUNDS	5 ROUNDS	
6. EVENT	SPECIAL SETTING FOR TOURNAMENT EVENT. 1 MATCH: ONLY ONE CREDIT IS REQUIRED FOR A 2P GAME. THE GAME ENDS AFTER ONE MATCH REGARDLESS OF THE RESULT..	ON	OFF		
7. JOIN-IN	SET THE OPTION TO ALLOW OTHER PLAYERS TO JOIN-IN.	ON	OFF		
8. EXIT	RETURN TO THE CONFIGURATION MENU.				

NOTE: FACTORY SETTING

Proprietary and confidential information, not to be disclosed or copied without the express permission of CAPCOM® COIN-OP, INC.

JAMMA Connections

SOLDER SIDE			COMPONENT SIDE
GND	A	1	GND
GND	B	2	GND
+5 VDC	C	3	+5 VDC
+5 VDC	D	4	+5 VDC
N.C.	E	5	N.C.
+12 VDC	F	6	+12 VDC
KEY	H	7	KEY
N/C	J	8	COIN COUNTER 1
COIN LOCK 2	K	9	COIN LOCK 1
*SPEAKER (-)	L	10	*SPEAKER (+)
N.C.	M	11	N.C.
VIDEO GREEN	N	12	VIDEO RED
VIDEO SYNC	P	13	VIDEO BLUE
SERVICE (FREE CREDIT)	R	14	VIDEO GROUND
N/C	S	15	DIAGNOSTICS
2 PLAYER - COIN	T	16	1 PLAYER - COIN
2 PLAYER - START	U	17	1 PLAYER - START
2 PLAYER - UP	V	18	1 PLAYER - UP
2 PLAYER - DOWN	W	19	1 PLAYER - DOWN
2 PLAYER - LEFT	X	20	1 PLAYER - LEFT
2 PLAYER - RIGHT	Y	21	1 PLAYER - RIGHT
2 PLAYER - **PUNCH**	Z	22	1 PLAYER - **PUNCH**
2 PLAYER - **KICK**	a	23	1 PLAYER - **KICK**
2 PLAYER - **SPECIAL**	b	24	1 PLAYER - **SPECIAL**
N/C	c	25	N/C
N/C	d	26	N/C
GND	e	27	GND
GND	f	28	GND

Auxiliary Cable (P/N 03-0052) Connections

WIRE COLOR	CONNECTOR ODD ROW			CONNECTOR EVEN ROW	WIRE COLOR
	N/C	1	2	N/C	
	N/C	3	4	N/C	
	N/C	5	6	N/C	
	N/C	7	8	N/C	
PURPLE/YELLOW	NOT USED	9	10	N/C	
	N/C	11	12	N/C	
	N/C	13	14	N/C	
PINK	NOT USED	15	16	N/C	
RED	NOT USED	17	18	N/C	
BLUE	NOT USED	19	20	N/C	
GRAY/YELLOW	NOT USED	21	22	N/C	
PINK/YELLOW	NOT USED	23	24	N/C	
	N/C	25	26	N/C	
	N/C	27	28	N/C	
GRAY/YELLOW	TEST BRKT-VOLUME UP	29	30	TEST BRKT-VOLUME DOWN	PINK/YELLOW
BLACK/WHITE	TEST BRKT-VOLUME COMMON	31	32	N/C	
BLACK	PLAYER 2 KICK - COMMON	33	34	PLAYER 1 KICK-COMMON	BLACK

Proprietary and confidential information, not to be disclosed or copied without the express permission of CAPCOM® COIN-OP.

REFERENCE INFORMATION

GAME CASE CONTROLS

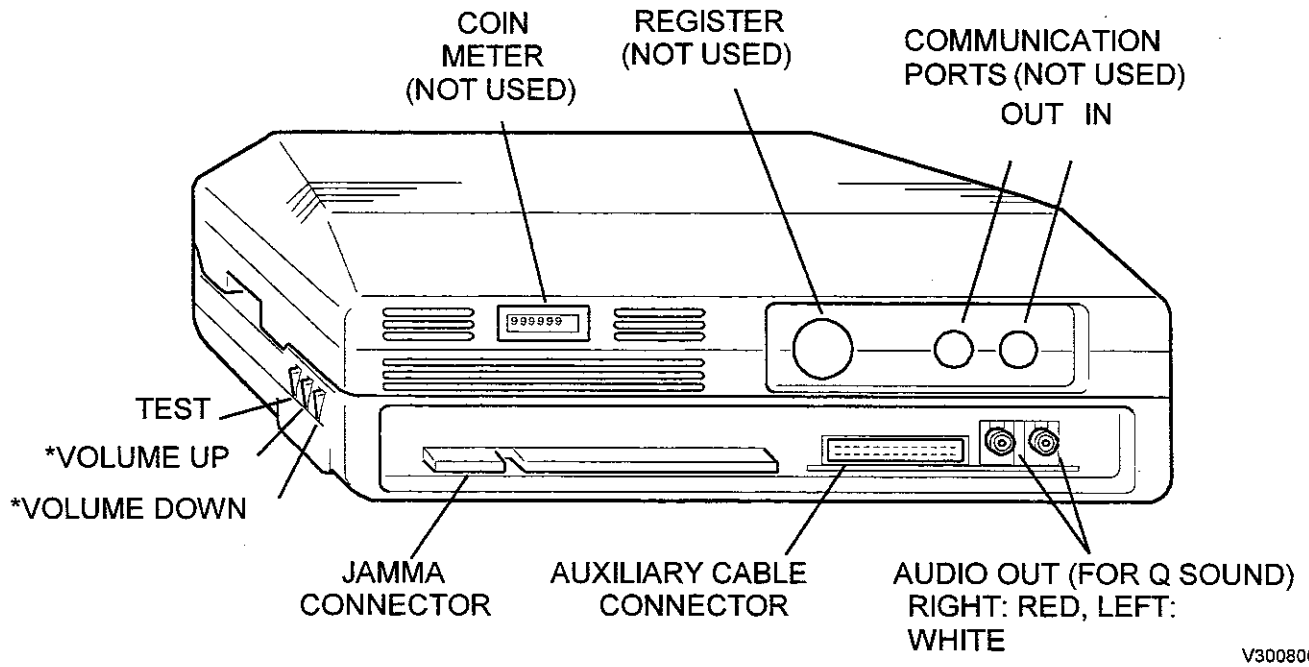

TYPICAL CONTROL PANEL LAYOUTS FOR *"Super GEM Fighter™"*

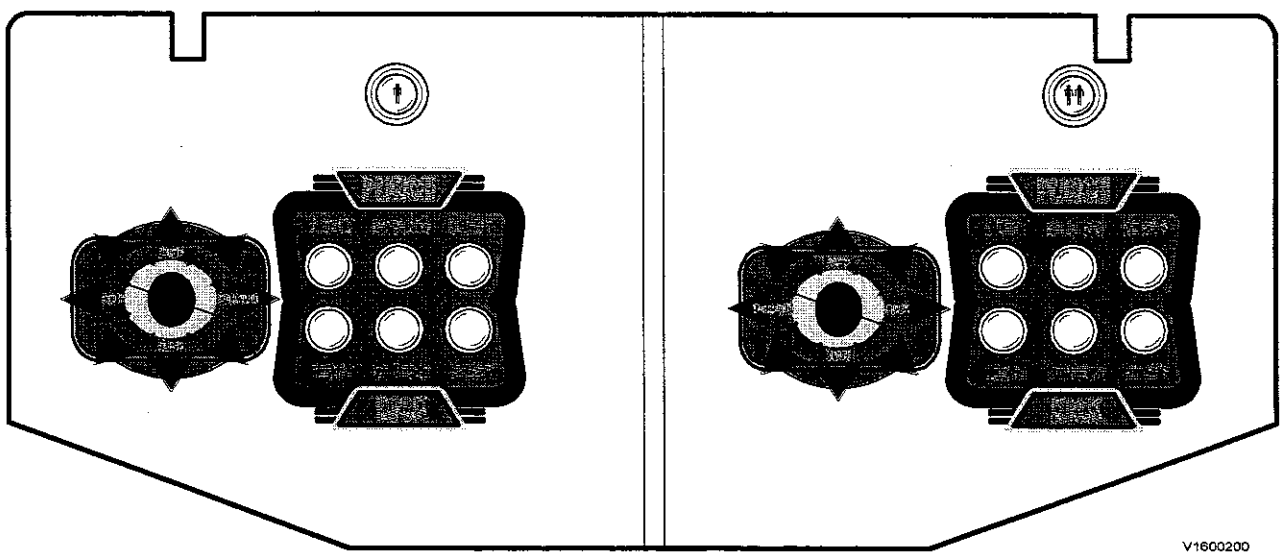

Proprietary and confidential information, not to be disclosed or copied without the express permission of CAPCOM® COIN-OP, INC.

NOTICE

This equipment has been tested and found to comply with the limits for a Class A digital device, pursuant to Part 15 of the FCC Rules. These limits are designed to provide reasonable protection against harmful interference when the equipment is operated in a commercial environment. This equipment generates, uses, and can radiate radio frequency energy and, if not installed and used in accordance with the instruction manual, may cause harmful interference to radio communications. Operation of this equipment in a residential area is likely to cause harmful interference, in which case the user will be required to correct the interference at his own expense.

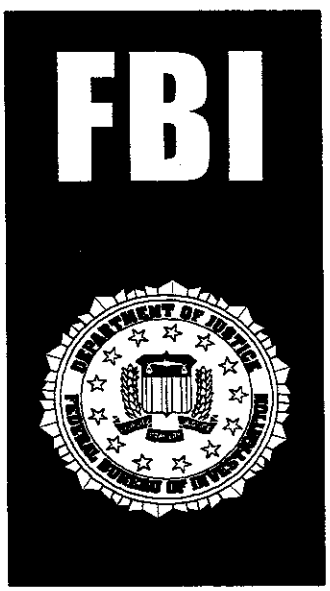

WARNING

Federal law provides severe civil and criminal penalties for the unauthorized reproduction, distribution, or exhibition of copyrighted audiovisual works and video games.

The Federal Bureau of Investigation investigates allegations of criminal copyright infringement.

CAPCOM® COIN-OP, INC.
475 Oakmead Parkway
Sunnyvale, CA 94086
Phone: (408) 774-0500
Fax: (408) 522-5331

Copyright © 1997 CAPCOM ® COIN-OP, INC., All Rights Reserved