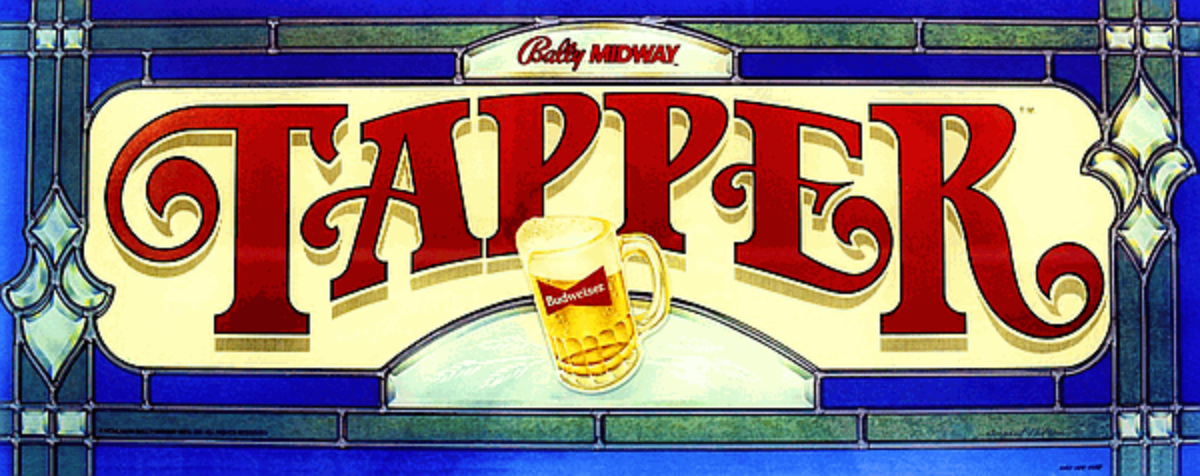
Bally MIDWAY
TAPPER
Budweiser

# TAPPER INSTRUCTIONS

INSTRUCTIONS:

- Insert coin.
- Select 1 or 2 players.
- Pour & serve beer to all customers as they arrive.
- Customers leave bar when served.
- Do not serve beer to drinking customers.
- Bartenders must catch returning empty mugs

OBJECT OF GAME.

- Serve all customers and catch empty mugs to advance rack.

CONTROLS:

- Move joystick up or down to move bartender from bar to bar.
- Move joystick left or right to move bartender down bar.
- Tapper fills mug with beer when pulled. Release tapper to serve mug.

HINTS:

- Pick up tips on bar for extra profits.

December, 1983
Game No. A11

Bally MIDWAY

# TAPPER

## Parts and Operating Manual

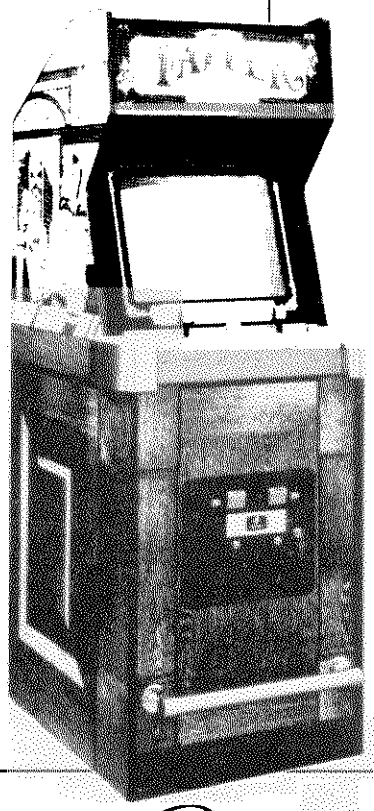

Bally

MIDWAY MFG. CO.

10601 W. Belmont Avenue
Franklin Park, Illinois 60131
U.S.A.

Phone: (312) 451-9200 Cable Address: MIDCO Telex No.: 72-1596

FORM 0A11-00300-0000

**WARNING**

**THIS GAME MUST BE GROUNDED. FAILURE TO DO SO MAY RESULT IN DESTRUCTION TO ELECTRONIC COMPONENTS.**

**WARNING:** This equipment generates, uses, and can radiate radio frequency energy and if not and used in accordance with the instructions manual, may cause interference to radio communications. It has been tested and found to comply with the limits for a CLASS A computing device pursuant to SUBPART J of PART 15 of FCC RULES, which are designed to provide reasonable protection against such interference when operated in a commerical environment. Operation of this equipment in a residential area is likely to cause interference in which case the user at his own expense will be required to take whatever measures may be required to correct the interference.

ELECTRICAL BULLETIN: FOR ALL APPARATUS COVERED BY THE CANADIAN STANDARDS ASSOCIATION (CSA) STANDARD C22.2 NO. 1, WHICH EMPLOYS A SUPPLY CORD TERMINATED WITH A POLARIZED 2-PRONG ATTACHMENT PLUG.

CAUTION: TO PREVENT ELECTRIC SHOCK DO NOT USE THIS (POLARIZED) PLUG WITH AN EXTENSION CORD, RECEPTACLE OR OTHER OUTLET UNLESS THE BLADES CAN BE FULLY INSERTED TO PREVENT BLADE EXPOSURE.

ATTENTION: POUR PREVENIR CHOCS ELECTRIQUES NE PAS UTILISER CETTE FICHE POLARISEE AVEC UN PROLONGATEUR, UNE PRISE DE COURANT OU UNE AUTRE SORTIE DE COURANT, SAUF SI LES LAMES PEUVENT ETRE INSEREES A FOND SANS EN LAISSER AUCUNE PARTIE A DECOUVERT.


Bally MIDWAY™

*Invites You To Use*

**OUR TOLL FREE NUMBERS FOR SERVICE INFORMATION CONCERNING THIS GAME, OR ANY OTHER BALLY MIDWAY GAME YOU NOW HAVE ON LOCATION.**

**CALL US FOR PROMPT, COURTEOUS ANSWERS TO YOUR PROBLEMS.**

**VIDEO ⟹ Continental U.S. 1-800-323-7182**

**PINBALL ⟹ Continental U.S. 1-800-323-3555**

Bally MIDWAY™ — 10601 West Belmont Avenue, Franklin Park, Illinois, 60131 phone (312)451-9200



© COPYRIGHT MCMLXXXIV BY BALLY MIDWAY MFG. CO. ALL RIGHTS RESERVED

NO PART OF THIS PUBLICATION MAY BE REPRODUCED BY ANY MECHANICAL, PHOTOGRAPHIC, OR ELECTRONIC PROCESS, OR IN THE FORM OF A PHONOGRAPHIC RECORDING, NOR MAY IT BE TRANSMITTED, OR OTHERWISE COPIED FOR PUBLIC OR PRIVATE USE, WITHOUT PERMISSION FROM THE PUBLISHER. THIS MANUAL IS FOR SERVICE USE ONLY, AND NOT FOR GENERAL DISTRIBUTION. FOR PERMISSION REQUESTS, WRITE: BALLY MIDWAY MFG. CO., 10601 W. BELMONT AVE., FRANKLIN PARK, IL 60131



Printed in U.S.A.

# TAPPER

# GAME OPERATION

## ATTRACT MODE

1. The Attract mode starts:

   ☐ Just after power has been turned on to the game. (Self-Test switch is in the "OFF" position.)

   ☐ After a Self-Test has been completed and there are no more credits left in the games memory.

   ☐ After a play has been finished, the score was not high enough to put the game into the High Score/Initial mode, and there are no more credits left in the games memory.

   ☐ After the High Score/Initial mode when there are no more credits left in its memory.

   ☐ No matter where the game is in the Attract mode sequence, it will immediately go to the Ready-To-Play mode display as soon as a game has been paid for.

## READY-TO-PLAY MODE

1. The Ready-To-Play mode starts when enough coins have been accepted for a 1 player game. Additional coins may be deposited for a 2 player game.

2. The Ready-To-Play mode ends when the "START" button is pressed.

## PLAY MODE

1. The Play mode begins when the "START" button is pressed.

2. The Play mode ends when all of your BAR TENDERS have been eliminated. When this happens, "GAME OVER" is written across the monitor screen.

## HIGH SCORE/INITIAL MODE:

If your score was high enough to become one of the ten best scores, the game will go into the High Score/Initial mode immediately after the "GAME OVER" display. If your score is not high enough to cause the game to go into the High Score/Initial mode, it will either go to the Attract mode (if there are no more credits left in its memory) or into the Ready-To-Play mode (if there are still credits left in its memory).

Follow the ON-SCREEN instructions to enter your initials next to your score in the league of the best ten players to date.

After the High Score/Initial mode, the game will either go to the Attract mode (if there are no more credits left in its memory) or into the Ready-To-Play mode (if there are still credits left in its memory).

# TAPPER

## SCORING

| DESCRIPTION | POINTS AWARDED | NOTES |
|---|---|---|
| PICK UP TIP | 1500 POINTS | |
| GET DRINKERS OUT OF DOOR | | |
| | 50 POINTS | FOR EVERY COWBOY |
| | 75 POINTS | FOR EVERY SPORTS PERSON |
| | 100 POINTS | FOR EVERY PUNK ROCKER |
| | 150 POINTS | FOR EVERY SPACE CREATURE |
| CATCH AN EMPTY MUG | 100 POINTS | FOR EACH ONE CAUGHT |
| COMPLETING A RACK | 1000 POINTS | |
| COMPLETING BONUS RACK | 3000 POINTS | |

## TAPPER

## OPTION SWITCH SETTINGS

////////////////////////////////////// SWITCH NO. 1 - AT B 3 - LOCATED ON SOUND I/O P.C. BOARD //////////////////////////////////////

| **DURING GAME PLAY:** | SW#1 NOT USED | SW#2 NOT USED | SW#3 | SW#4 NOT USED | SW#5 NOT USED | SW#6 NOT USED | SW#7 | SW#8 NOT USED | SW#9 NOT USED | SW#10 |
|---|---|---|---|---|---|---|---|---|---|---|
| ATTRACT MODE SOUNDS ON<br>**ATTRACT MODE SOUNDS OFF | | | **ON**<br>**OFF** | | | | | | | |
| COCKTAIL MODEL GAME<br>**UPRIGHT MODEL GAME | | | | | | | **ON**<br>**OFF** | | | |
| FREEZE VIDEO<br>**NORMAL OPERATION | | | | | | | | | | **ON**<br>**OFF** |

////////////////////////////////////// SWITCH NO. 3 - AT D 14 - LOCATED ON SOUND I/O P.C. BOARD //////////////////////////////////////

| | SW#1 | *SW#2 | *SW#3 | *SW#4 |
|---|---|---|---|---|
| **NORMAL OPERATION<br>SOUND I/O DIAGNOSTIC MODE | **OFF**<br>**ON** | | | |
| **NORMAL OPERATION<br>RAM/ROM TEST<br>INDICATES TEST RESULTS VIA YELLOW L E D ON SOUND I/O BOARD: FAST FLASH = BAD ROM SLOW FLASH = BAD RAM | | **OFF**<br>**ON** | | |
| **NORMAL OPERATION<br>OSCILLATOR TEST | | | **OFF**<br>**ON** | |
| **NORMAL OPERATION<br>FILTER TEST | | | | **OFF**<br>**ON** |

*NO EFFECT IF SW#1 OF SWITCH NO. 3 IS IN THE "OFF" POSITION.
**FACTORY RECOMMENDED SETTINGS.

**PART NO. M051-00A11-A007**

THE REMAINDER OF YOUR NEW GAME'S MOST COMMON OPTION SETTINGS ARE CONDUCTED DURING THE **MACHINE SETUP** PORTION OF THE SELF-TEST MODE.

## NO. 0A11 - TAPPER UPRIGHT - FRONT

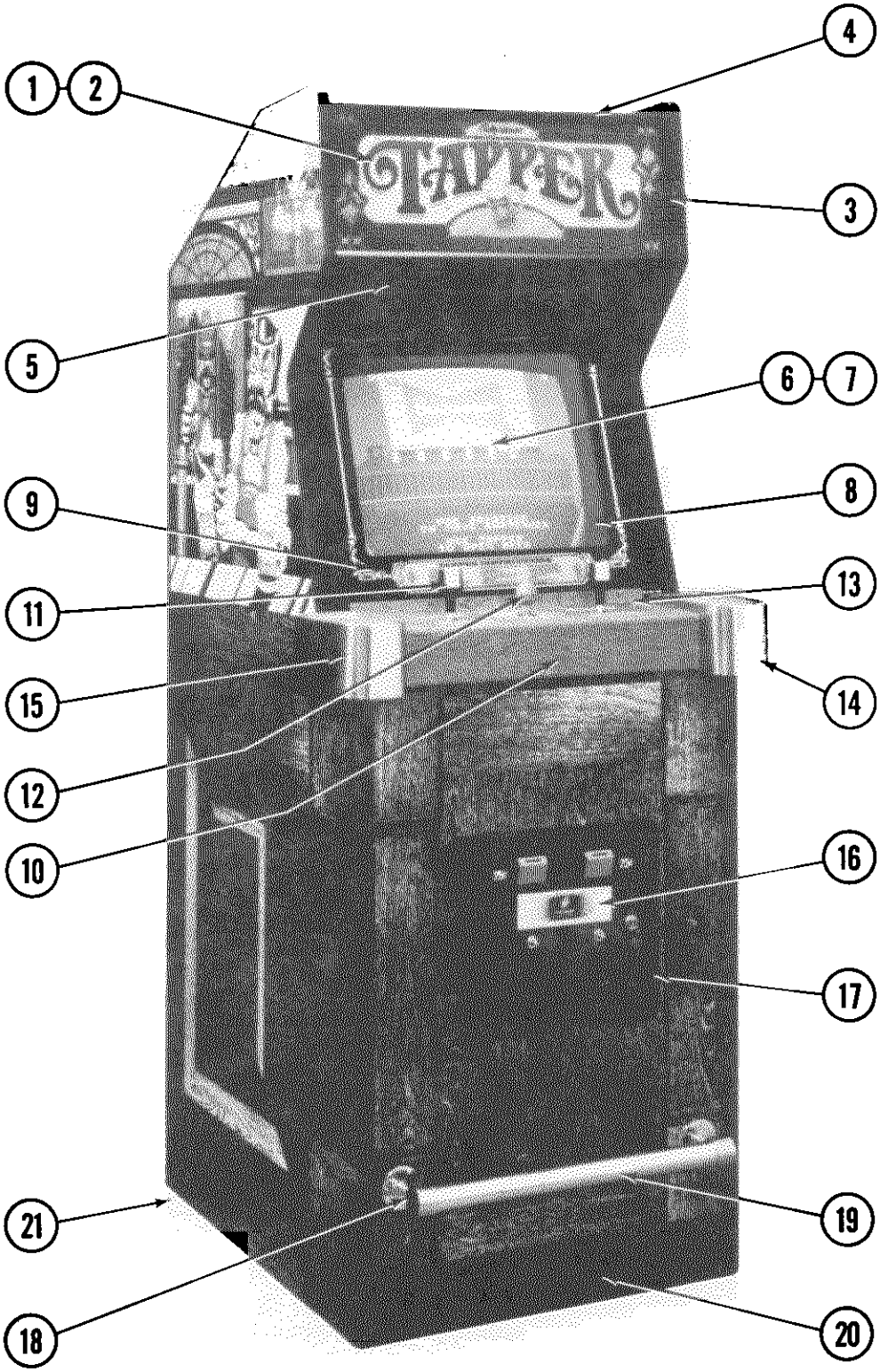

## NO. 0A11 - TAPPER UPRIGHT - FRONT PARTS LIST

ORDER BY PART NUMBER **ONLY**

| ITEM | PART NO. | DESCRIPTION |
|---|---|---|
| 1 | 0A11-00900-00XF | HEADER GLASS |
| 2 | A595-00011-0000 | FLUORESCENT HEADER LIGHT ASSY. |
| 3 | 0537-00903-0055 | GLASS CHANNEL - 7-7/8" LG. (2 REQ'D) |
| 4 | 0574-00903-0100 | HEADER RETAINING BRKT. (2 REQ'D) |
| | 0017-00101-0138 | #8x5/8 TORX PAN HD. TAMPER PROOF SCR. (10 REQ'D) |
| 5 | 0017-00009-0393 | BLACK SPEAKER GRILLE W/SLOTS (2 REQ'D) |
| | 0017-00003-0430 | 6"x9" SPEAKER - 4 OHM, 10W. (2 REQ'D) |
| | 0017-00003-0461 | 6"x9" SPEAKER - 4 OHM, 15W. (2 REQ'D) |
| | 0017-00101-0127 | #8-32x1-1/2 CARRIAGE BOLT (8 REQ'D) |
| | 0017-00103-0061 | #8-32 HEX NUT W/SEMS (8 REQ'D) |
| 6 | A311-00002-0000 | 19" HORIZ. MONITOR ASSY. |
| 7 | 0333-00902-0000 | PLEXI-DIFFUSER |
| | 0508-00901-0000 | PLEXI-GLASS MTG. CLIPS (4 REQ'D) |
| | 0017-00101-0141 | #8x11/16 UNSLOT. HEX HD. SCREW (4 REQ'D) |
| 8 | 0017-00042-0314 | 19" BEZEL - INJECTION MOLDED |
| 9 | 0A11-00901-00XF | MAIN VIEWING GLASS |
| | 0A11-00902-0100 | GLASS HOLDER - RIGHT |
| | 0A11-00902-0200 | GLASS HOLDER - LEFT |
| 10 | AA11-00016-0000 | CONTROL SHELF PLATE ASSY. |
| | 0A11-00904-0000 | DECORATIVE OVERLAY |
| | 0A11-00100-01XF | CONTROL SHELF MTG. BRKT. - RIGHT |
| | 0A11-00100-02XF | CONTROL SHELF MTG. BRKT. - LEFT |
| | 0555-00901-0000 | PLASTIC LOCATING PIN (4 REQ'D) |
| | 0017-00009-0534 | BASSICK CLAMP (2 REQ'D) |
| | 0017-00101-0141 | #8x11/16 UNSLOT. HEX HD. SCREW (8 REQ'D) |
| 11 | AA11-00015-0000 | HANDLE CONTROL ASSY. (2 REQ'D) |
| 12 | A982-00017-0000 | CONTROL ASSY. |
| 13 | 0017-00032-0106 | SMALL RED PUSH BUTTON SWITCH (2 REQ'D) |
| 14 | 0A11-00902-0100 | GLASS HOLDER - RIGHT |
| 15 | 0A11-00902-0200 | GLASS HOLDER - LEFT |
| 16 | A982-00014-0000 | DOUBLE COIN DOOR & CABLE ASSY. |
| 17 | 0090-00002-04BK | LARGE COIN DOOR FRAME |
| | 0017-00101-0121 | #6-32x5/16 PHIL. TRS. HD. SCR. (3 REQ'D) (MOUNTS COIN DOOR TO FRAME) |
| | A950-00004-0000 | COIN BOX ASSEMBLY |
| | A950-00006-0100 | WIRE COIN BOX CRADLE ASSY. |
| | 0950-00105-0000 | COIN BOX COVER |
| | 0950-00104-0000 | COIN BOX HANDLE |
| | 0950-00101-0000 | COIN DEFLECTOR (2 REQ'D) |
| | 0950-00900-0000 | LARGE PLASTIC COIN BOX |
| | 0950-00103-0000 | COIN BOX DIVIDER - OPTIONAL |
| | 0017-00101-0142 | 1/4-20x1-3/8 BLACK RND. HD. BOLT (4 REQ'D) |
| | 0017-00104-0014 | 7/8" DISH WASHER (4 REQ'D) |
| | 0017-00103-0018 | 1/4-20 HEX NUT (4 REQ'D) |
| 18 | 0A11-00106-0000 | BRASS END POST (2 REQ'D) |
| 19 | 0017-00009-0558 | BRASS RAIL |
| 20 | 0935-00906-0100 | KICK PLATE - 23" LG. |
| 21 | 0017-00102-0048 | 3/8-16x2" LEG LEVELERS (4 REQ'D) |
| | 0017-00103-0026 | 3/8-16 LEG LEVELER HEX NUTS (4 REQ'D) |

## NO. 0A11 - TAPPER UPRIGHT - REAR ACCESS

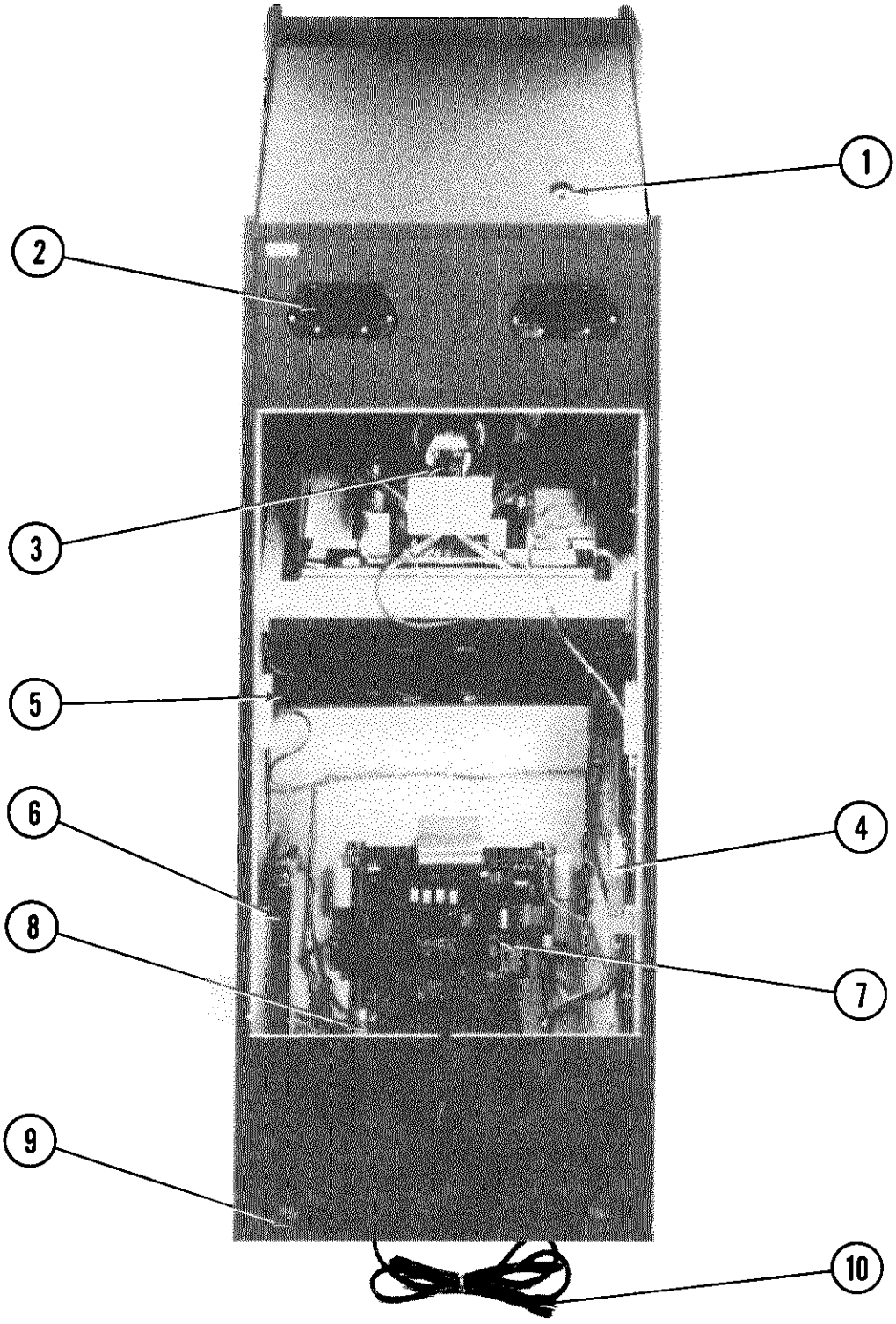

## NO. 0A11 - TAPPER UPRIGHT - REAR ACCESS PARTS LIST

ORDER BY PART NUMBER **ONLY**

| ITEM | PART NO. | DESCRIPTION |
|---|---|---|
| 1 | A945-00038-0000 | ON-OFF SWITCH & PLATE ASSY. |
| 2 | 0894-00916-0000 | PLASTIC PULL & VENT (2 REQ'D) |
| | 0017-00101-0141 | #8x11/16 UNSLOT. HEX HD. M.S. (8 REQ'D) |
| 3 | 0017-00003-0339 | ELECTROHOME - 19" COLOR MONITOR (OR) |
| 3 | 0017-00003-0439 | WELLS-GARDNER - 19" COLOR MONITOR (OR) |
| 3 | 0017-00003-0454 | ZENITH - 19" COLOR DUAL SYNC MONITOR |
| | 0636-00101-0000 | MONITOR RAIL (2 REQ'D) |
| | 0555-00901-0000 | PLASTIC LOCATING PINS (4 REQ'D) |
| | 0017-00101-0141 | #8x11/16 UNSLOT. HEX HD. M.S. (8 REQ'D) |
| 4 | A088-00016-0000 | INTERLOCK SWITCH & SPRING BRKT. ASSY. |
| | 0303-00904-0000 | INTERLOCK SWITCH COVER |
| 5 | A084-90910-F000 | DUAL POWER AMP ASSY. |
| 6 | A084-90412-D000 | POWER SUPPLY P.C. ASSY. - 125VA. |
| | 0624-00902-0100 | P.C. SUPPORT BRKT. - 12" LG. (2 REQ'D) |
| | 0624-00902-0500 | P.C. SUPPORT BRKT. - 6-1/2" LG. (2 REQ'D) |
| | 0017-00101-0141 | #8x11/16 UNSLOT. HEX HD. M.S. (10 REQ'D) |
| | 0017-00104-0037 | #8 WASHER (10 REQ'D) |
| ┌► 7 | AA11-00007-0000 | CARD RACK W/BOARDS ASSY. |
| │ 8 | A945-00020-0000 | POWER CHASSIS ASSY. -125VA., 115V. |
| │ 9 | A961-00007-0000 | CASTER ASSEMBLY (2 REQ'D) |
| │ 10 | A945-00019-0000 | LINE CORD ASSY. -115V. |
| | | **ADDITIONAL PARTS LIST** |
| | A097-00009-0000 | BACK DOOR LOCK ASSY. |
| | 0017-00009-0490 | 5-5/8" SQR. BACK DOOR VENT GRILLE (4 REQ'D) |
| └► 7 | AA11-00007-0000 | CARD RACK W/ BOARDS ASSY. |
| | A084-90913-AA11 | PROG. SUPER SOUND I/O P.C. BRD. ASSY. |
| | A639-00060-0000 | SHIELD & BARRIER ASSY. |
| | 0017-00101-0134 | #6-32x1/4" PHIL. RND. HD. M.S. (4 REQ'D) |
| | A084-91490-AA11 | PROG. C.P.U. P.C. BOARD ASSY. |
| | A358-00016-0000 | SHIELD & SPACER ASSY. - INNER |
| | A084-91464-AA11 | PROG. SUPER VIDEO GENERATOR P.C.B. ASSY. |
| | A358-00017-0000 | SHIELD & SPACER ASSY. - OUTER |
| | 0017-00101-0153 | #6-32x1" PHIL. RND. HD. M.S. (8 REQ'D) |

## NO. 0A11 - TAPPER UPRIGHT - HANDLE CONTROL ASSY.

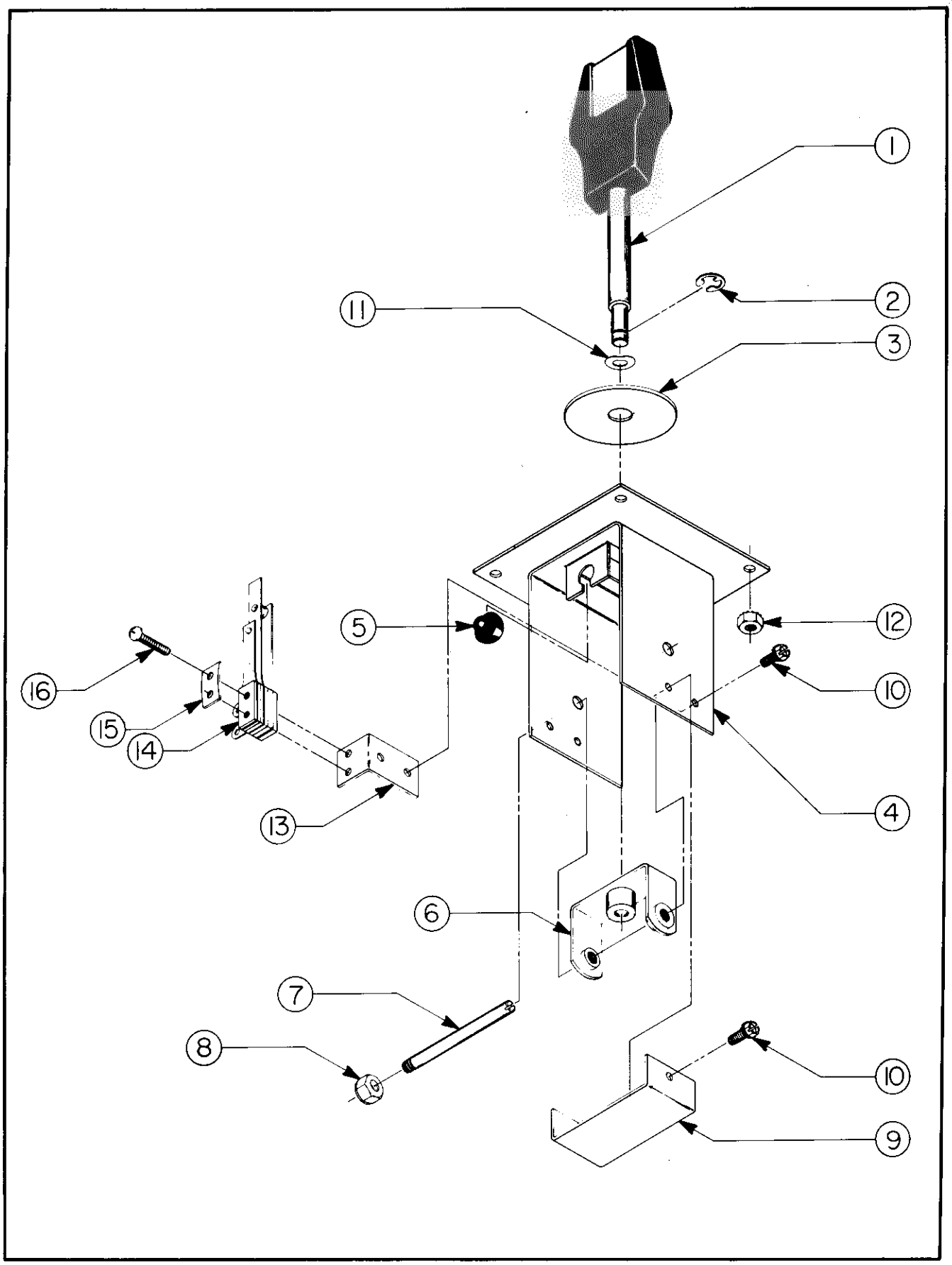

## NO. 0A11 - TAPPER UPRIGHT - HANDLE CONTROL ASSY. - PARTS LIST

ORDER BY PART NUMBER **ONLY**

| ITEM | PART NO. | DESCRIPTION |
|---|---|---|
| 1 | AA11-00012-0000 | HANDLE & SHAFT ASSY. |
| 2 | 0017-00100-0025 | 1/4" E-RING |
| 3 | 0852-00106-0000 | FOLLOWER PLATE |
| 4 | AA11-00013-0000 | TOP PLATE TO MAIN CONTROL BRKT. ASSY. |
| 5 | 0017-00041-0616 | RUBBER BUMPER - 90 DUROMETER (2 REQ'D) |
| 6 | A866-00027-0000 | PIVOT BRKT. HUB & BEARING ASSY. |
| 7 | 0852-00701-00XF | PIVOT PIN |
| 8 | 0017-00103-0011 | #10-32 LOCK NUT |
| 9 | 0508-00112-00XF | BRACE - MAIN BRKT. |
| 10 | 0017-00101-0555 | #6-32x5/16 SLT. HEX HD. SCREW (3 REQ'D) |
| 11 | 0017-00104-0116 | SPRING WASHER |
| 12 | 0017-00103-0061 | #8-32 LOCK NUT W/SEMS (4 REQ'D) |
| 13 | 0353-00108-0000 | SWITCH BRKT. |
| 14 | A353-00020-0000 | LEAF SWITCH ASSY. |
| 15 | 0020-00202-0000 | SWITCH PLATE |
| 16 | 0017-00101-0527 | #5-40x5/8 PHIL. RND. HD. M.S. (2 REQ'D) |
| | 0A11-00905-0000 | HANDLE OVERLAY (NOT SHOWN) |

## NO. 0A11 - TAPPER UPRIGHT - CONTROL ASSY.

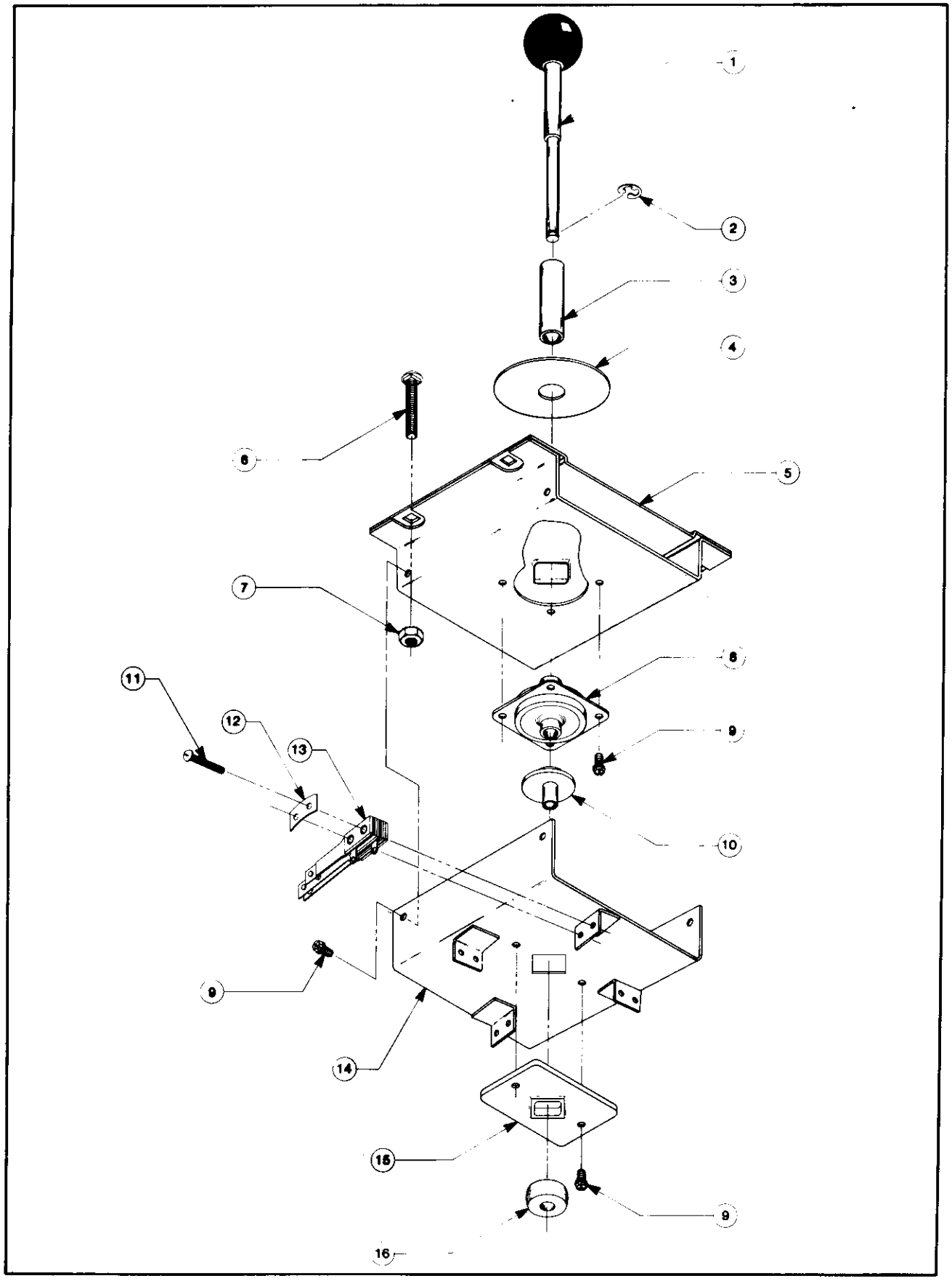

## NO. 0A11 - TAPPER UPRIGHT - CONTROL ASSY. - PARTS LIST

*ORDER BY PART NUMBER **ONLY***

| ITEM | PART NO. | DESCRIPTION |
|---|---|---|
| 1 | A932-00022-0000 | BALL & SHAFT ASSEMBLY |
| 2 | 0017-00100-0025 | 1/4 E-RING |
| 3 | 0921-00702-0000 | STOP SPACER |
| 4 | 0921-00902-0000 | SLIDE PLATE |
| 5 | A982-00019-0000 | PIVOT PLATE WELD ASSY. |
| 6 | 0017-00101-0637 | #8-32 x 1" CARRIAGE BOLT (4 REQ'D.) |
| 7 | 0017-00103-0061 | #8-32 HEX NUT W/SEMS (4 REQ'D.) |
| 8 | 0932-00902-0000 | GROMMET |
| 9 | 0017-00101-0598 | #8-32 x 5/16 SLT. HEX HD. M.S. (10 REQ'D.) |
| 10 | 0962-00904-0000 | SLEEVE |
| 11 | 0017-00101-0527 | #5-40 x 5/8 SLT. RND. HD. SCR. (8 REQ'D.) |
| 12 | 0020-00202-0000 | SWITCH PLATE (4 REQ'D.) |
| 13 | A932-00009-0000 | SWITCH ASSEMBLY (4 REQ'D.) |
| 14 | A932-00012-0000 | STOP PLATE & SWITCH BRKT. ASSY. |
| 15 | 0932-00905-0000 | WEAR PLATE |
| 16 | 0921-00700-0000 | ACTUATOR |

## FRONT DOOR ASSEMBLY — U.S.A. 25¢

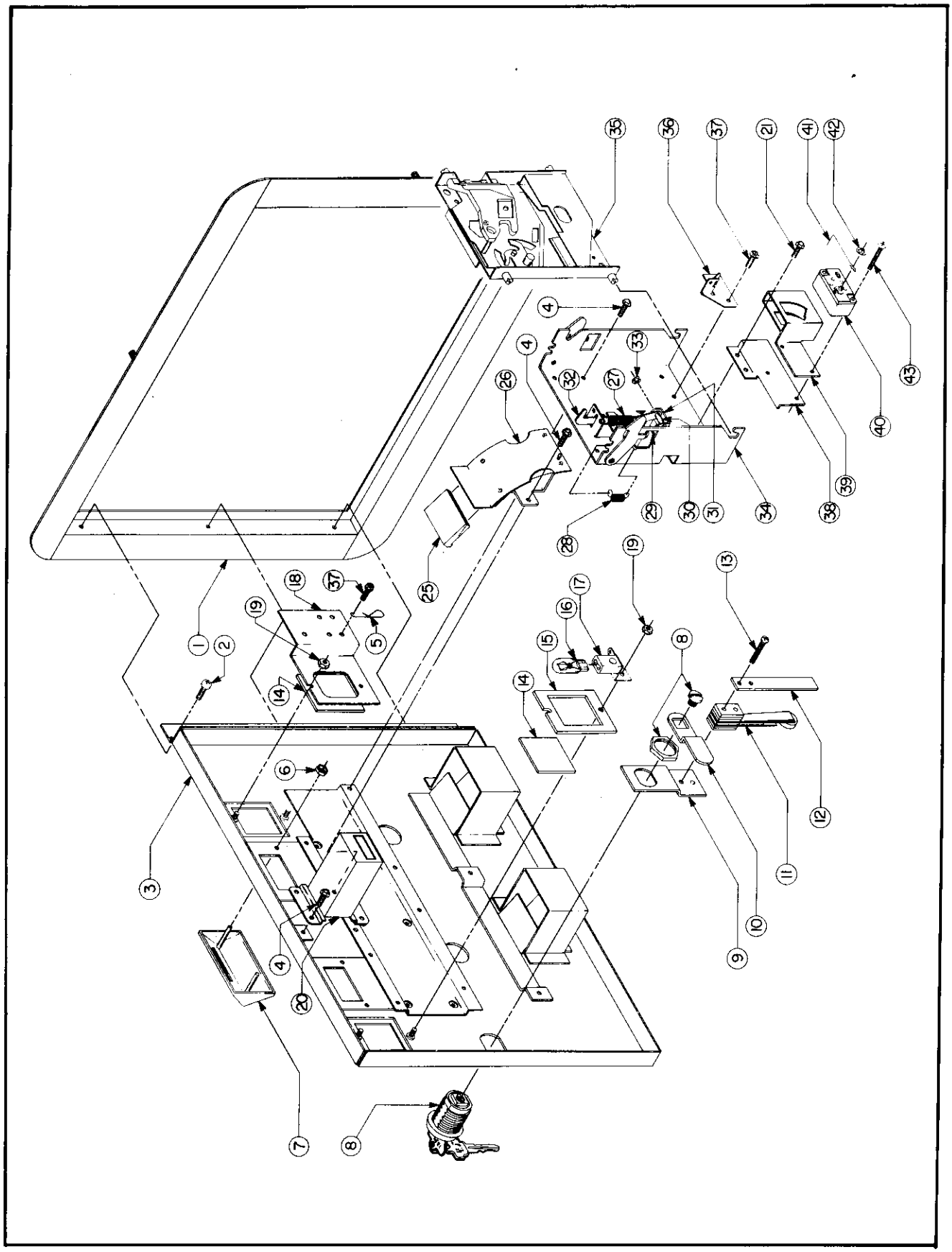

## FRONT DOOR ASSEMBLY — U.S.A. 25¢ — PARTS LIST

*ORDER BY PART NUMBER **ONLY***

| ITEM | PART NO. | DESCRIPTION |
|---|---|---|
| 1 | 0090-00002-04BK | DOUBLE ENTRY COIN DOOR FRAME |
| 2 | 0017-00101-0121 | #6-32 x 5/16 PHIL. TRS. HD. SCR. (3 REQ'D.) |
| 3 | A090-00073-02BK | DOUBLE ENTRY COIN DOOR W/DRESS PLATE |
| 4 | 0017-00101-0123 | #8 x 1/4 UNSLOT. HEX HD. SCREW (12 REQ'D.) |
| 5 | 0017-00007-0019 | KEY HOOK |
| 6 | 0017-00103-0059 | PUSH NUT (4 REQ'D.) |
| 7 | 0090-00912-0000 | COIN ENTRY PLATE — 25¢ (2 REQ'D.) |
| 8 | A097-00005-0000 | DOOR LOCK & KEY W/SCREW & NUT (OR) |
| 8 | A097-00006-0000 | DOOR LOCK & KEY W/SCREW & NUT |
| 9 | 0090-00128-00XF | DOOR TILT SWITCH BRKT. |
| 10 | 0017-00005-0225 | DOOR CAM |
| 11 | A090-00095-0000 | DOOR TILT SWITCH |
| 12 | 0090-00126-03XF | SWITCH BACK-UP PLATE |
| 13 | 0017-00101-0525 | #5-40 x 9/16" PHIL. HD. M.S. (2 REQ'D.) |
| | A090-00096-0000 | DOOR TILT SWITCH & BRKT. ASSY. (ITEMS 9 & 11 THRU 13) |
| 14 | 0090-00903-9500 | 25¢ WINDOW (2 REQ'D.) |
| 15 | 0090-00143-00XF | COIN PLEX RETAINER |
| 16 | 0017-00003-0219 | 12 VOLT LAMP — G.E. #194 (2 REQ'D.) |
| 17 | 0017-00031-0048 | WEDGE SOCKET W/BRKT. (2 REQ'D.) |
| 18 | A090-00100-0000 | BRKT. ASSY. |
| 19 | 0017-00103-0084 | #6-32 HEX NUT W/SEMS (4 REQ'D.) |
| 20 | A090-00089-0000 | COIN METER W/DIODE |
| 21 | 0017-00101-0124 | #6 x 1/4 UNSLOT. HEX HD. SCR. (4 REQ'D.) |
| 25 | 0090-00911-0000 | INSULATOR (2 REQ'D.) |
| 26 | A090-00112-0000 | COIN CHUTE & TOP ASSY. (2 REQ'D.) |
| 27 | 0010-00134-0000 | SPRING |
| 28 | 0010-00181-0000 | SPRING |
| 29 | 0017-00007-0083 | 1/8 x 1-5/8 ROLL PIN |
| 30 | 0090-00129-00XF | PIVOT POST |
| 31 | 0090-00167-00XF | PIVOT LEVER |
| 32 | 0090-00182-00XF | REJECT LEVER |
| 33 | 0017-00100-0018 | E-RING |
| | A090-00088-0000 | REJECT LEVER ASSY. (2 REQ'D.) (ITEMS 30 THRU 33) |
| 34 | A090-00105-0000 | COIN ACCEPTOR FRAME ASSY. (2 REQ'D.) |
| 35 | 0017-00005-0003 | COIN ACCEPTOR W/STRING CUTTER (2 REQ'D.) (OR) |
| 35 | 0017-00005-0211 | COIN ACCEPTOR W/ANTI STRING DEVICE (2 REQ'D.) (OR) |
| 35 | 0017-00005-0214 | COIN ACCEPTOR W/STRING CUTTER (2 REQ'D.) |
| 36 | A090-00064-0000 | ANTI-PENNY DEVICE |
| 37 | 0017-00101-0099 | #6 x 1/4 SLT. HEX HD. M.S. (2 REQ'D.) |
| 38 | 0090-00162-00XF | COIN SWITCH MTG. BRKT. |
| 39 | 0017-00005-0203 | COIN SWITCH CHUTE |
| 40 | 0017-00005-0195 | COIN SWITCH |
| 41 | 0010-00599-0000 | COIN SWITCH WIRE |
| 42 | 0017-00007-0015 | PUSH-ON RING |
| | A090-00059-0400 | COIN SWITCH & WIRE ASSY. (ITEMS 40 THRU 42) |
| 43 | 0017-00101-0147 | #4-40 x 3/4 PHIL. PAN. HD. M.S. (2 REQ'D.) |
| | A090-00077-0000 | COIN GUIDE & SWITCH ASSY. (ITEMS 38 THRU 43) |

## — POWER CHASSIS ASSY. — 125VA., 115V.

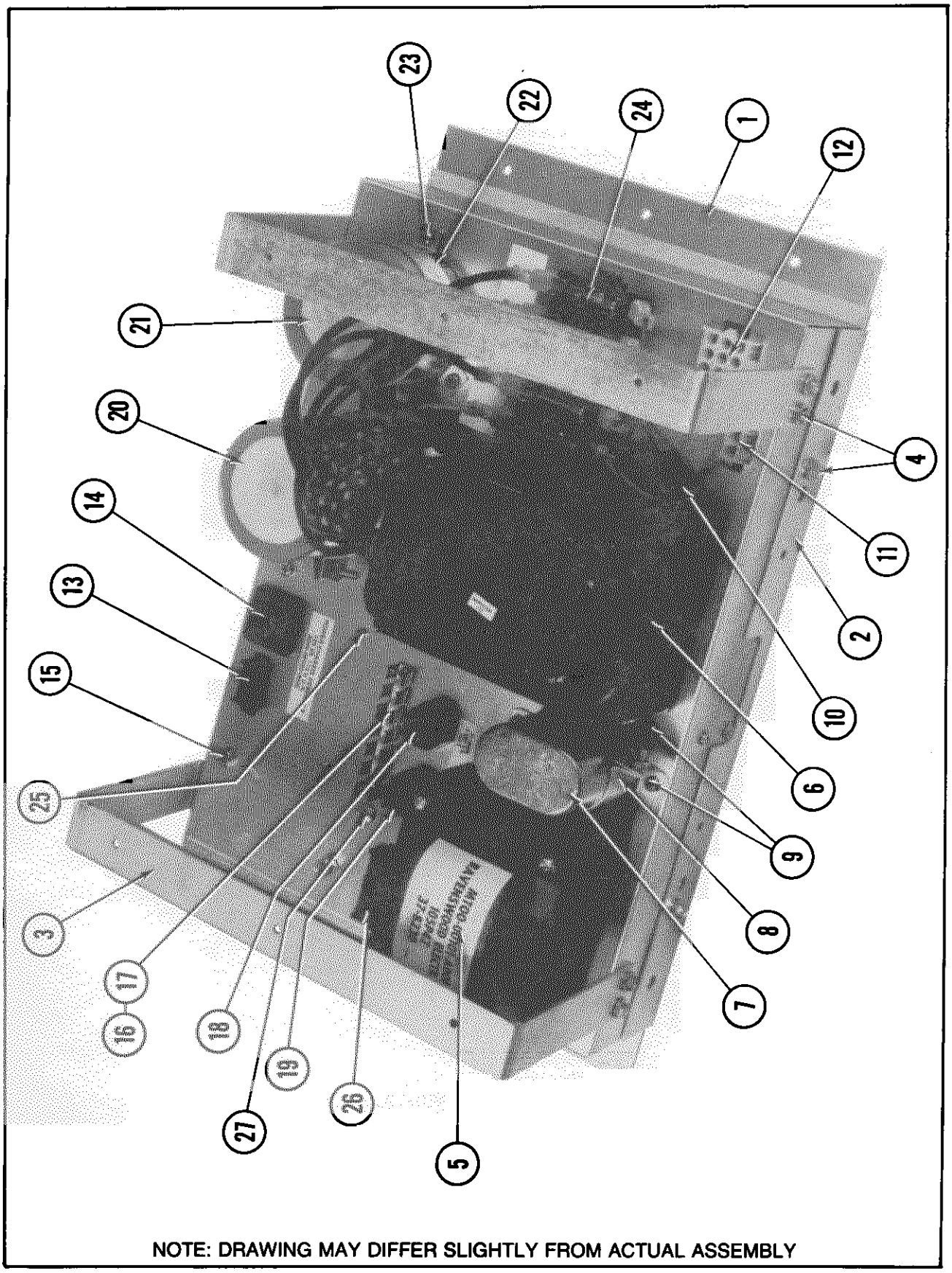


NOTE: DRAWING MAY DIFFER SLIGHTLY FROM ACTUAL ASSEMBLY

## POWER CHASSIS ASSY.—125VA., 115V.—PARTS LIST

*ORDER BY PART NUMBER **ONLY***

| ITEM | PART NO. | DESCRIPTION |
|---|---|---|
| 1 | A945-00046-00XF | CHASSIS & PARTITION ASSY. |
| 2 | A945-00029-0100 | MTG. PLATE & BARRIER ASSY. |
| 3 | 0945-00107-01XF | STRAP (2 REQ'D.) |
| 4 | 0017-00101-0123 | #8 x 1/4 UNSLOT. HEX HD. SCR. (12 REQ'D.) |
| 5 | MT00-00101-A000 | ISOLATION TRANSFORMER W/O SHIELD ASSY. — 115V., 50/60 HZ. |
| | 0017-00103-0061 | #8-32 HEX NUT W/SEMS (4 REQ'D.) |
| 6 | MT00-00099-A000 | POWER TRANSFORMER ASSY. — 115V., 60 HZ. |
| | 0017-00103-0084 | #6-32 HEX NUT W/SEMS (4 REQ'D.) |
| 7 | 0175-181T4-GXJK | CAPACITOR — 3.5 M.F., 440V. |
| 8 | 0017-00009-0535 | CLAMP |
| | 0017-00101-0565 | #6-32 x 7/16 SLT. PAN HD. SCR. |
| | 0017-00103-0084 | #6-32 HEX NUT W/SEMS |
| 9 | 0017-00101-0067 | #6 x 3/8 PHIL. PAN HD. SCR. (11 REQ'D.) |
| 10 | 0945-00902-0000 | SNAP BUSHING (3 REQ'D.) |
| 11 | 0017-00021-0297 | 2 POSITION CONNECTOR |
| 12 | A945-00030-0100 | CONNECTOR & CABLE ASSY. #1 |
| 13 | A945-00030-0200 | CONNECTOR & CABLE ASSY. #2 |
| 14 | A945-00021-0000 | CONVENIENCE OUTLET ASSY. |
| 15 | 0017-00101-0573 | #6-32 x 1/2 PHIL. RND. HD. SCR. (2 REQ'D.) |
| | 0017-00103-0084 | #6-32 HEX NUT W/SEMS (2 REQ'D.) |
| | A945-00025-0000 | FILTER ASSEMBLY — 125V. — UNDER CHASSIS (NOT SEEN) |
| 16 | 0017-00021-0510 | TERMINAL STRIP |
| 17 | 0017-00101-0140 | #4-40 x 5/16 PHIL. PAN HD. SCR. (2 REQ'D.) |
| 18 | 0017-00003-0263 | SLO-BLO FUSE — 4A., 250V. |
| 19 | 0017-00003-0005 | FUSE — 2A., 250V. |
| | 0017-00003-0444 | QUICK CONN. FUSEHOLDER (2 REQ'D.) — FOR ABOVE FUSES |
| 20 | 0945-00816-1902 | CAPACITOR — 100,000 M.F. |
| 21 | 0945-00816-1901 | CAPACITOR — 55,000 M.F. |
| | 0017-00104-0107 | #10 FLAT WASHER (4 REQ'D.) |
| | 0017-00103-0081 | #10-32 HEX NUT W/SEMS (4 REQ'D.) |
| 22 | 0017-00009-0422 | CLAMP (2 REQ'D.) |
| | 0017-00101-0758 | #8-32 x 3/4 PHIL. RND. HD. SCREW (2 REQ'D.) |
| | 0017-00103-0061 | #8-32 HEX NUT W/SEMS (2 REQ'D.) |
| 23 | 0017-00101-0067 | #6 x 3/8 PHIL. PAN HD. SCR. (6 REQ'D.) |
| 24 | 0945-00904-0000 | 5 POSITION FUSE HOLDER |
| | 0017-00003-0263 | SLO-BLO FUSE — 4A., 250V. |
| | 0017-00003-0217 | SLO-BLO FUSE — 2.5A., 250V. (2 REQ'D.) |
| | 0017-00003-0007 | SLO-BLO FUSE — 3A., 250V. (2 REQ'D.) |
| | 0945-00903-0000 | FUSE HOLDER BARRIER |
| | A945-00022-0000 | HEATSINK & DIODE ASSY. |
| | 0017-00101-0067 | #6 x 3/8 PHIL. PAN HD. SCR. (2 REQ'D.) |
| 25 | 0017-00101-0780 | #6 x 1/2 PHIL. PAN HD. SCREW (2 REQ'D.) |
| | 0017-00021-0629 | 5 POSITION TERMINAL STRIP — (UNDER CHASSIS) |
| | A945-00019-0000 | LINE CORD ASSY. — 115V. (NOT SHOWN) |
| 26 | A945-00030-0500 | CONNECTOR & CABLE ASSY. |
| 27 | 0017-00101-0660 | #10-32 x 3/4 PAN HD. SCREW |
| | 0017-00104-0107 | #10 FLAT WASHER |
| | 0017-00103-0081 | #10-32 HEX NUT W/SEMS |

## HEADER FLOURESCENT FIXTUTRE ASSY.

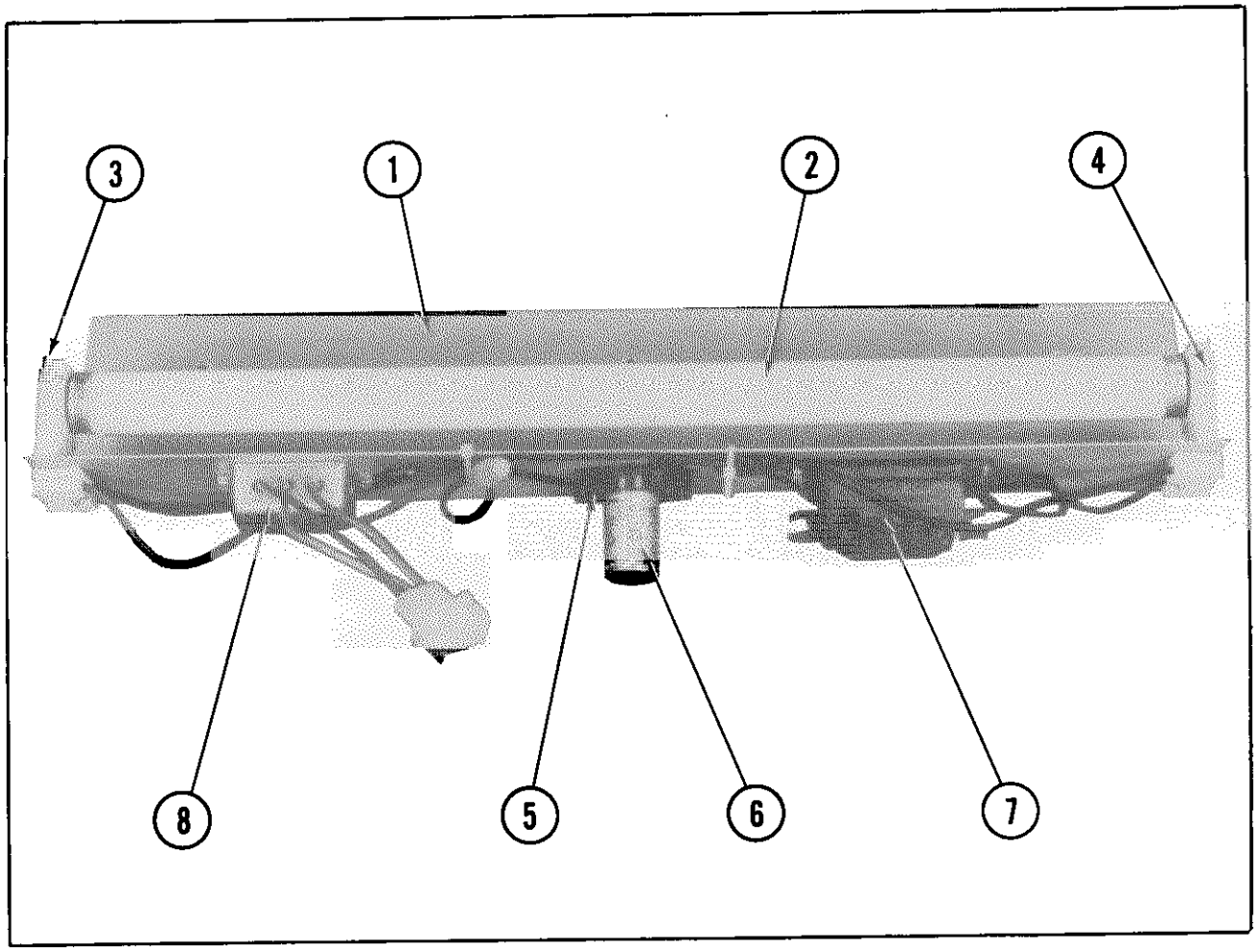


## HEADER FLOURESCENT FIXTUTRE ASSY. - PARTS LIST

*ORDER BY PART NUMBER **ONLY***

| ITEM | PART NO. | DESCRIPTION |
|---|---|---|
| 1 | 0595-00105-0000 | FLUORESCENT BRKT. |
| 2 | 0017-00003-0043 | 18" COOL WHITE FLUORESCENT LAMP |
| 3 | 0017-00003-0445 | LAMP LOCKS (2 REQ'D.) |
| 4 | 0017-00031-0036 | FLUORESCENT SOCKET (2 REQ'D.) |
| 5 | 0017-00003-0412 | FLUORESCENT STARTER HOLDER W/LEADS |
| | 0017-00101-0573 | #6-32 x 1/2 PHIL. RND. HD. M.S. (4 REQ'D.) |
| | 0017-00104-0009 | #6 EXT. WASHER (4 REQ'D.) |
| 6 | 0017-00003-0019 | FLUORESCENT STARTER |
| 7 | 0017-00003-0026 | BALLAST |
| | 0017-00101-0598 | #8-32 x 5/16 SLT. HEX HD. SCR. (4 REQ'D.) |
| 8 | A961-00042-0000 | LINE FILTER ASSY. |

## NO. 0A56 - TAPPER COCKTAIL - PARTS LIST

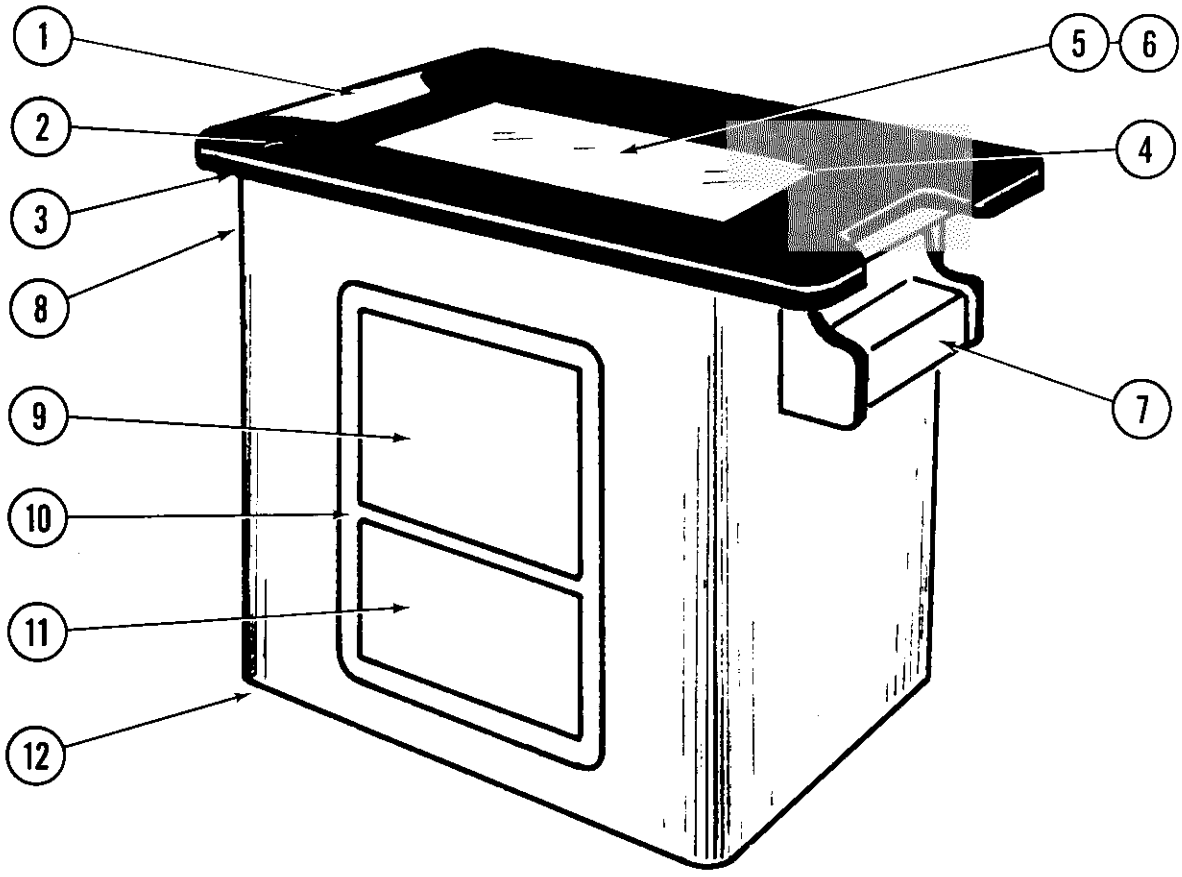


ORDER BY PART NUMBER **ONLY**

| ITEM | PART NUMBER | DESCRIPTION |
|---|---|---|
| 1 | 0311-00901-0000 | COVER GLASS |
| 2 | 0A56-00900-0000 | DECORATIVE ARTWORK UNDERLAY |
| 3 | 0311-00101-00XF | CORNER GLASS CLIPS (4 REQ'D) |
| | 0017-00101-0126 | #10-32x3/4 HEX BUTTON HD. SCREW (4 REQ'D) |
| 4 | 0017-00042-0314 | 19" BEZEL - INJECTION MOLDED |
| | 0311-00100-0000 | BEZEL MTG. BRKT. (2 REQ'D) |
| 5 | 0333-00902-0000 | DIFFUSER |
| | 0508-00901-0000 | PLEXI-GLASS MTG. CLIPS (4 REQ'D) |
| | 0017-00101-0124 | #6x1/4 UNSLOT HEX HD. M.S. (4 REQ'D) |
| 6 | 0017-00003-0474 | ELECTROHOME - 19" COLOR MONITOR (OR) |
| 6 | 0017-00003-0473 | WELLS-GARDNER - 19" COLOR MONITOR |
| | 0311-00109-0000 | HORIZONTAL MONITOR MTG. BRKT. (2 REQ'D) |
| | 0311-00902-0000 | MONITOR SHIELD |
| 7 | AA56-00004-0200 | CONTROL SHELF ASSY. - PLAYER #2 |
| | 0A56-00901-0200 | DECORATIVE OVERLAY - PLAYER #2 |

MO51-00A56-A009

## NO. 0A56 - TAPPER COCKTAIL - PARTS LIST

ORDER BY PART NUMBER **ONLY**

| ITEM | PART NUMBER | DESCRIPTION |
|---|---|---|
| 8 | AA56-00004-0100 | CONTROL SHELF ASSY. - PLAYER #1 (NOT SEEN) |
| | 0A56-00901-0100 | DECORATIVE OVERLAY - PLAYER #1 |
| * | A982-00017-0000 | MOLDED BALL CONTROL ASSY. (2 REQ'D) |
| * | AA11-00015-0000 | HANDLE CONTROL ASSY. (2 REQ'D) |
| | 0017-00032-0106 | PUSH BUTTON SWITCH (2 REQ'D) |
| | A362-00012-00XF | BOTTOM PLATE & CONTROL HINGE ASSY. (2 REQ'D) |
| | 0362-00901-0000 | LIGHT SHIELD (2 REQ'D) |
| | 0362-00100-0000 | LOCATION BRACKET (2 REQ'D) |
| | 0017-00031-0044 | WEDGE BASE LAMP SOCKET (4 REQ'D) |
| | 0017-00003-0219 | #194 WEDGE BASE LAMP (4 REQ'D) |
| 9 | A982-00014-0001 | COIN DOOR & CABLE ASSY. |
| 10 | A090-00603-00XF | COIN DOOR FRAME ASSY. |
| 11 | A090-00605-0000 | COIN BOX DOOR & LOCK ASSY. |
| | A090-00620-0000 | FORMED COIN BOX & ENCLOSURE ASSY. |
| 12 | 0311-00900-0000 | LEG (4 REQ'D) |
| | 0017-00101-0769 | #10x3/4 SLT HEX HD. WOOD SCREW (20 REQ'D) |
| | 0017-00102-0048 | 3/8-16x2" LEG LEVELERS (4 REQ'D) |
| | 0017-00103-0026 | 3/8-16 LEG LEVELER HEX NUTS (4 REQ'D) |
| | | **ADDITIONAL PARTS LIST** |
| * | AA11-00007-0000 | CARD RACK W/BOARDS ASSY. |
| | A084-90412-D000 | POWER SUPPLY - 125VA |
| | 0624-00902-0500 | P.C. SUPPORT BRKT. - 6-1/2" LG. (2 REQ'D) |
| | 0624-00902-0100 | P.C. SUPPORT BRKT. - 12" LG. (2 REQ'D) |
| * | A945-00020-0000 | POWER CHASSIS ASSY. - 125VA, 115V |
| | A945-00033-0000 | MAGNETIC SHIELD & LABEL ASSY. |
| | A945-00019-0000 | LINE CORD ASSY. - 115V |
| | A945-00038-0000 | ON - OFF SWITCH & PLATE ASSY. |
| | A088-00018-0000 | INTERLOCK SWITCH & BRACKET ASSY. |
| | A775-00013-0000 | FAN ASSEMBLY |
| | 0017-00003-0430 | 6" x 9" SPEAKER 4 OHM, 10W (2 REQ'D) |
| | 0017-00009-0393 | BLACK SPEAKER GRILLE W/SLOTS (2 REQ'D) |
| | 0017-00101-0127 | #8-32 x 1-1/2 BLACK RND. HD. CARRIAGE BOLT (8 REQ'D) |
| | 0017-00103-0061 | #8-32 HEX NUT W/SEMS (8 REQ'D) |
| | 0311-00102-0000 | TOP SHELF MORTISE HINGE (2 REQ'D) |
| | 0017-00101-0156 | #10-32 1-1/4 BLACK RND. HD. CARRIAGE BOLT (8 REQ'D) |
| | 0017-00103-0081 | #10-32 HEX NUT W/SEMS (8 REQ'D) |
| | 0017-00009-0534 | BASSICK CLAMP (2 REQ'D) |
| | 0610-00132-00ZN | STRIKE (2 REQ'D) |
| | A311-00009-0100 | CLAMP & BRACKET ASSY. - R.H. |
| | A311-00009-0200 | CLAMP & BRACKET ASSY. - L.H. |
| | 0311-00103-00XF | CATCH (2 REQ'D) |
| | 0017-00101-0141 | #8 x 1 1/16 UNSLOT HEX HD. M.S. (22 REQ'D) |

* = SEE TAPPER UPRIGHT CATALOG FOR DETAIL BREAKDOWN OF PARTS LIST & ILLUSTRATION.

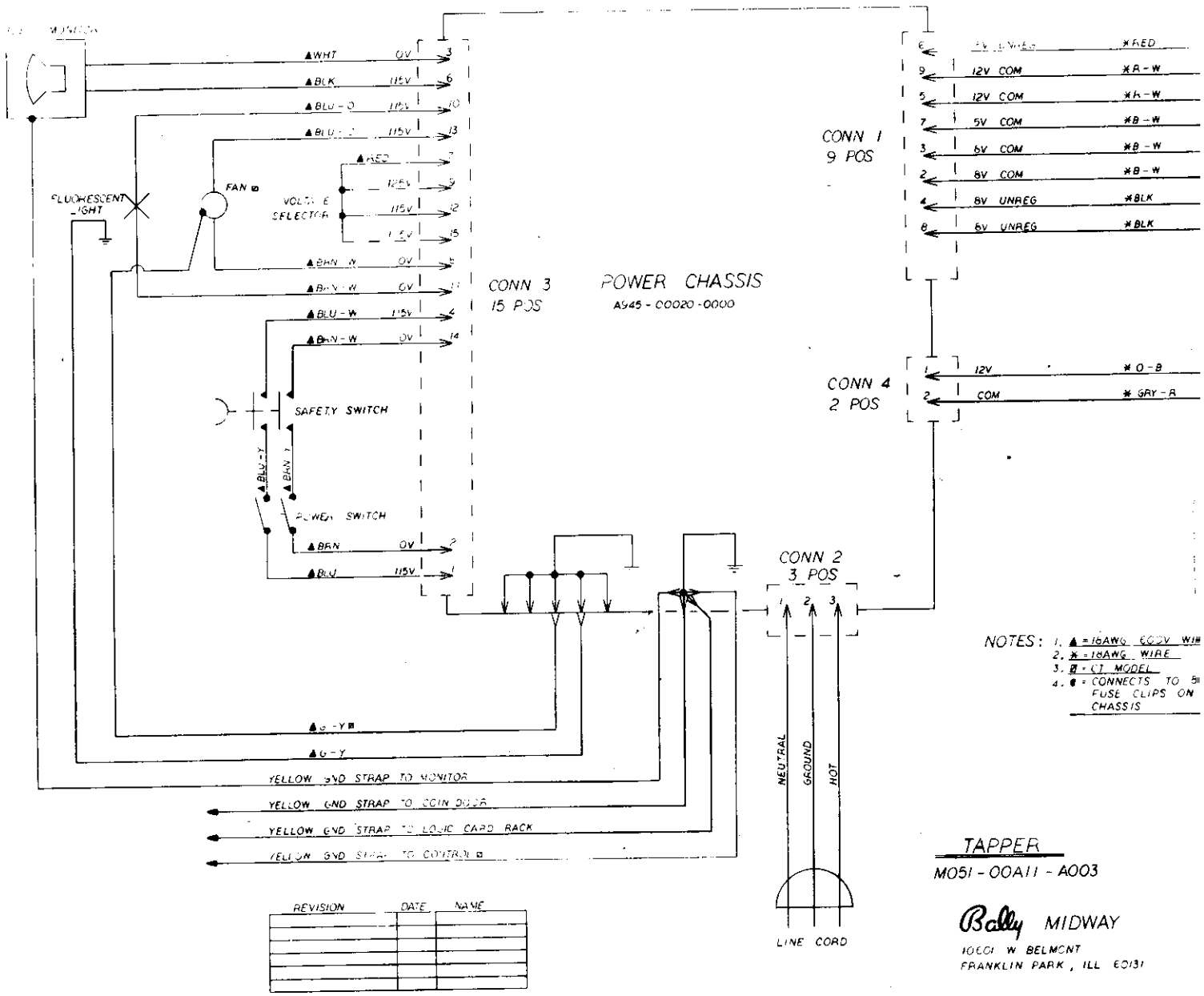


NOTES:
1. ▲ = 18AWG 600V WIRE
2. * = 18AWG WIRE
3. ⊠ = CT MODEL
4. ⊕ = CONNECTS TO 5⊕ FUSE CLIPS ON CHASSIS

| REVISION | DATE | NAME |
|---|---|---|
| | | |

TAPPER

M051-00A11-A003

Bally MIDWAY

10601 W BELMONT
FRANKLIN PARK, ILL 60131

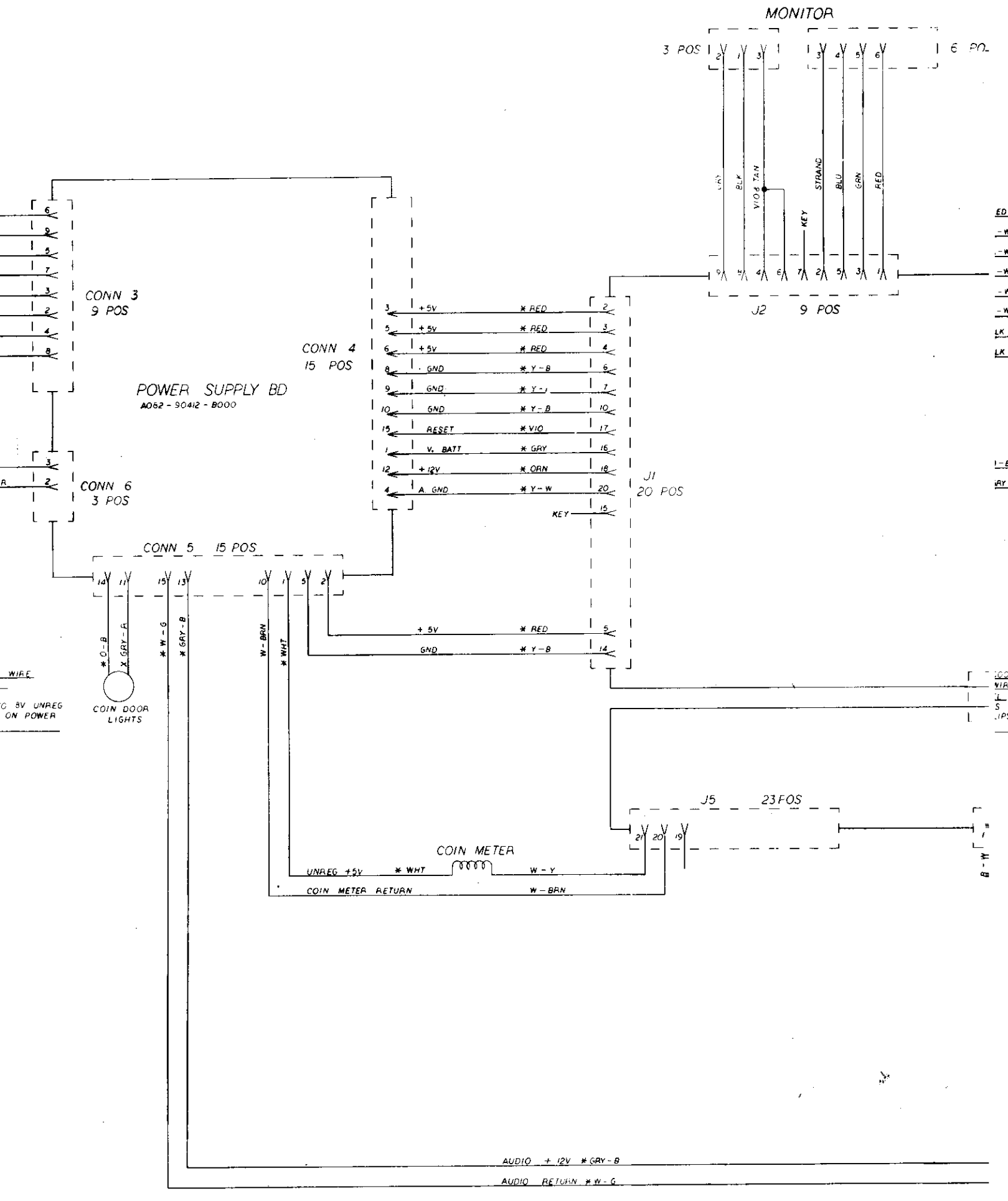
MONITOR
3 POS
6 PO-
J2 9 POS
CONN 3
9 POS
CONN 4
15 POS
POWER SUPPLY BD
A052 - 90412 - B000
CONN 6
3 POS
CONN 5 15 POS
J1
20 POS
+5V * RED
+5V * RED
+5V * RED
GND * Y-B
GND * Y-
GND * Y-B
RESET * VIO
V. BATT * GRY
+12V * ORN
A GND * Y-W
KEY
+5V * RED
GND * Y-B
* O-B
* GRY-A
* W-G
* GRY-B
W-BRN
* WHT
COIN DOOR LIGHTS
J5 23POS
COIN METER
UNREG +5V * WHT
W-Y
COIN METER RETURN
W-BRN
AUDIO +12V * GRY-B
AUDIO RETURN * W-G

VIDEO GEN. BD.

SUPER CPU BD

A084 - 90010 - AA11

SUPER SOUND I/O BD

A084 - 90913 - AA11

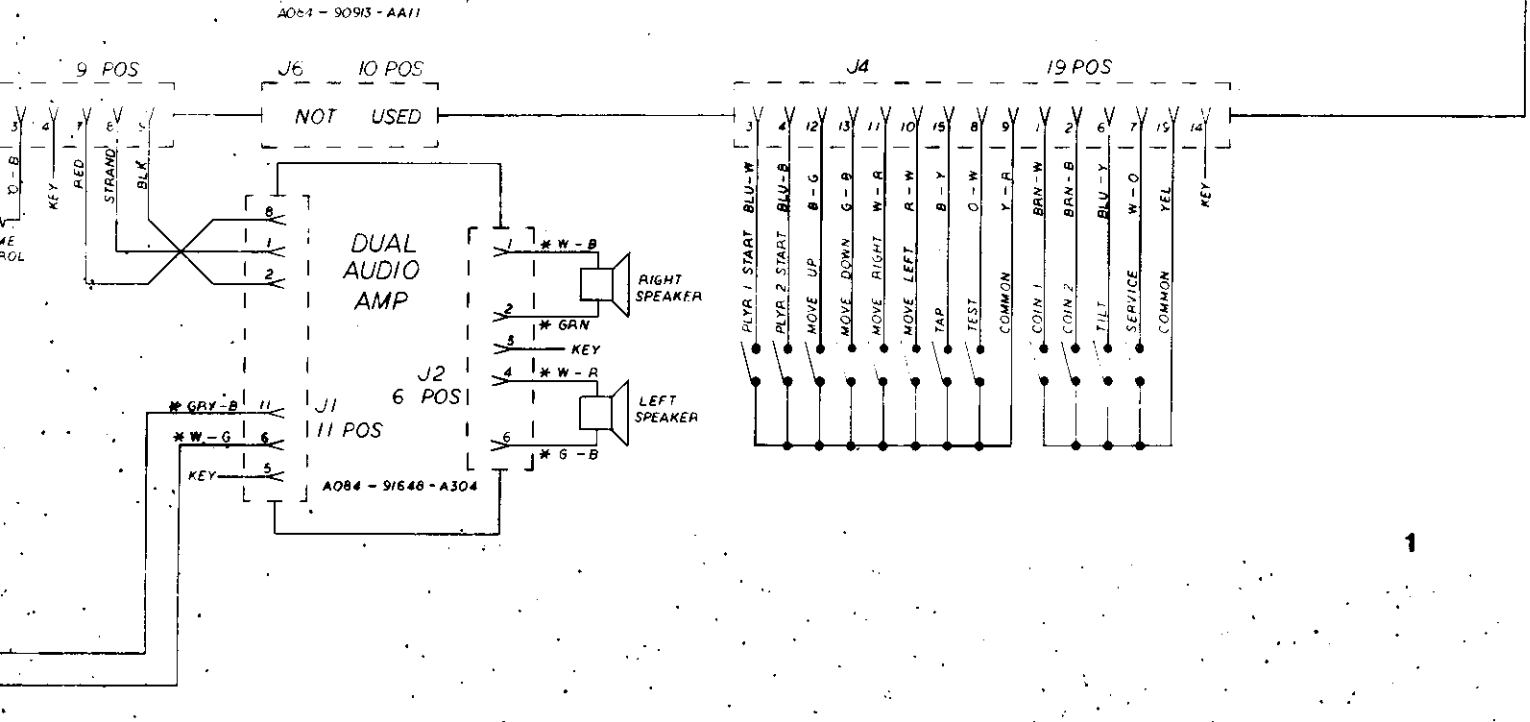

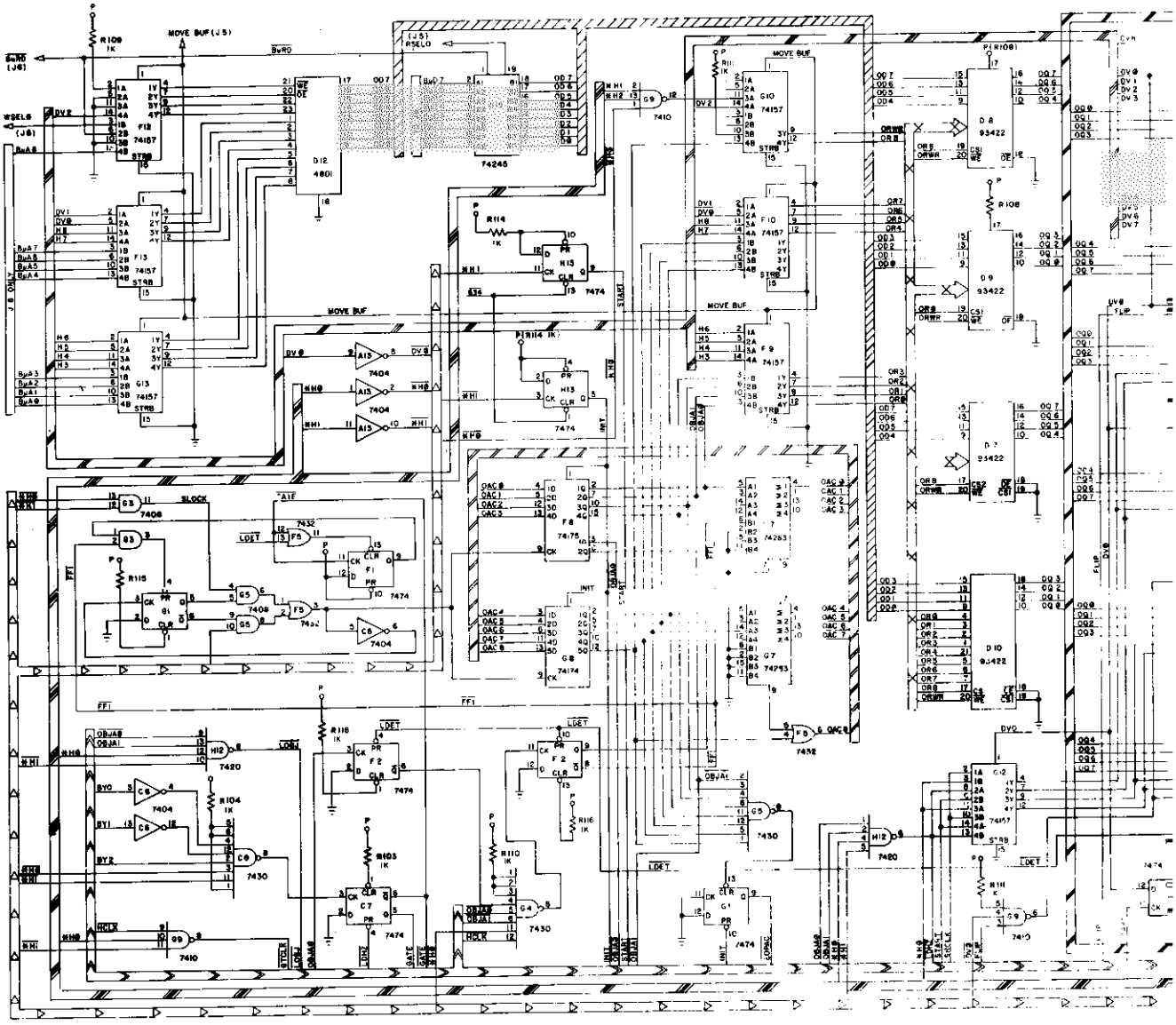

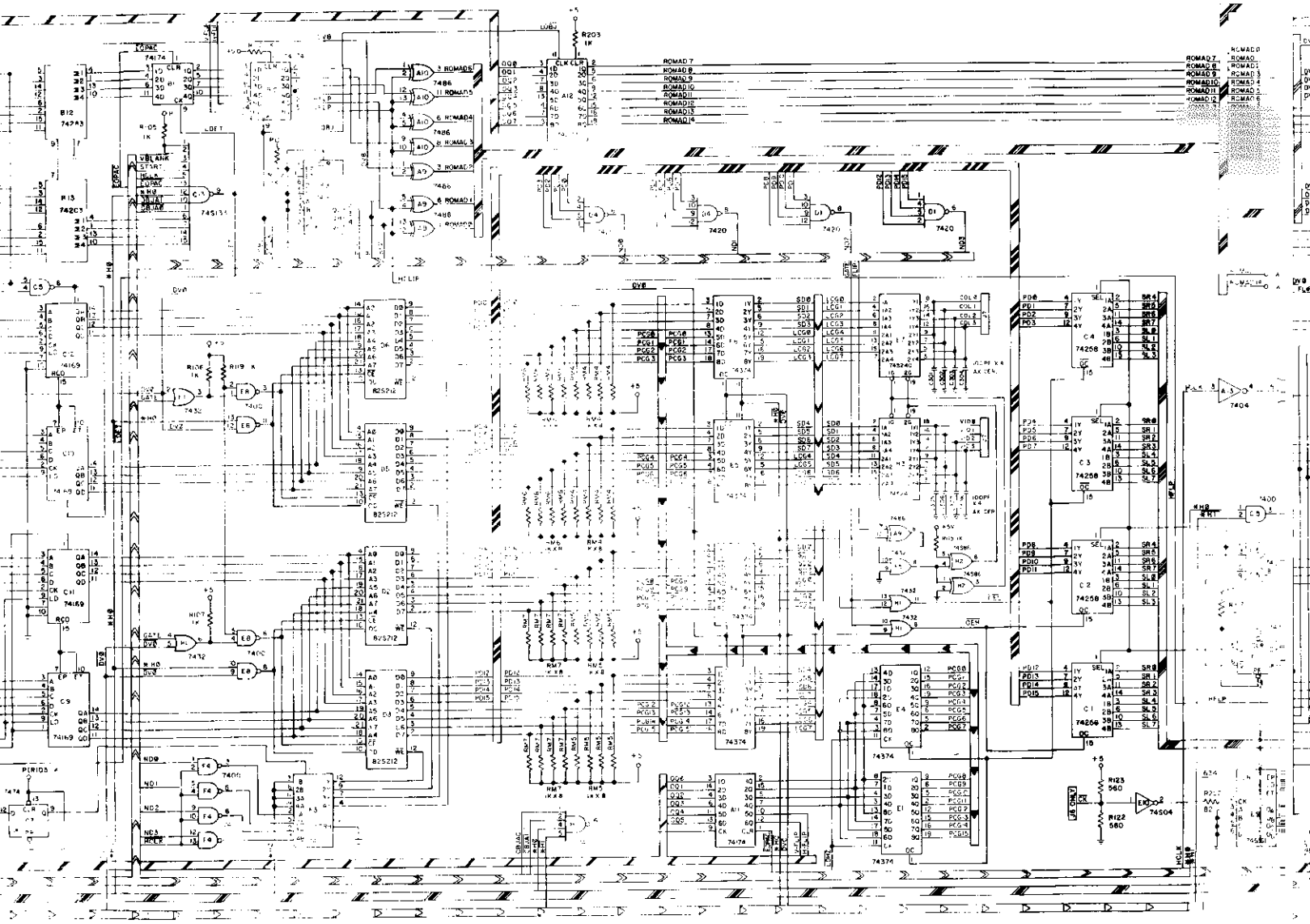

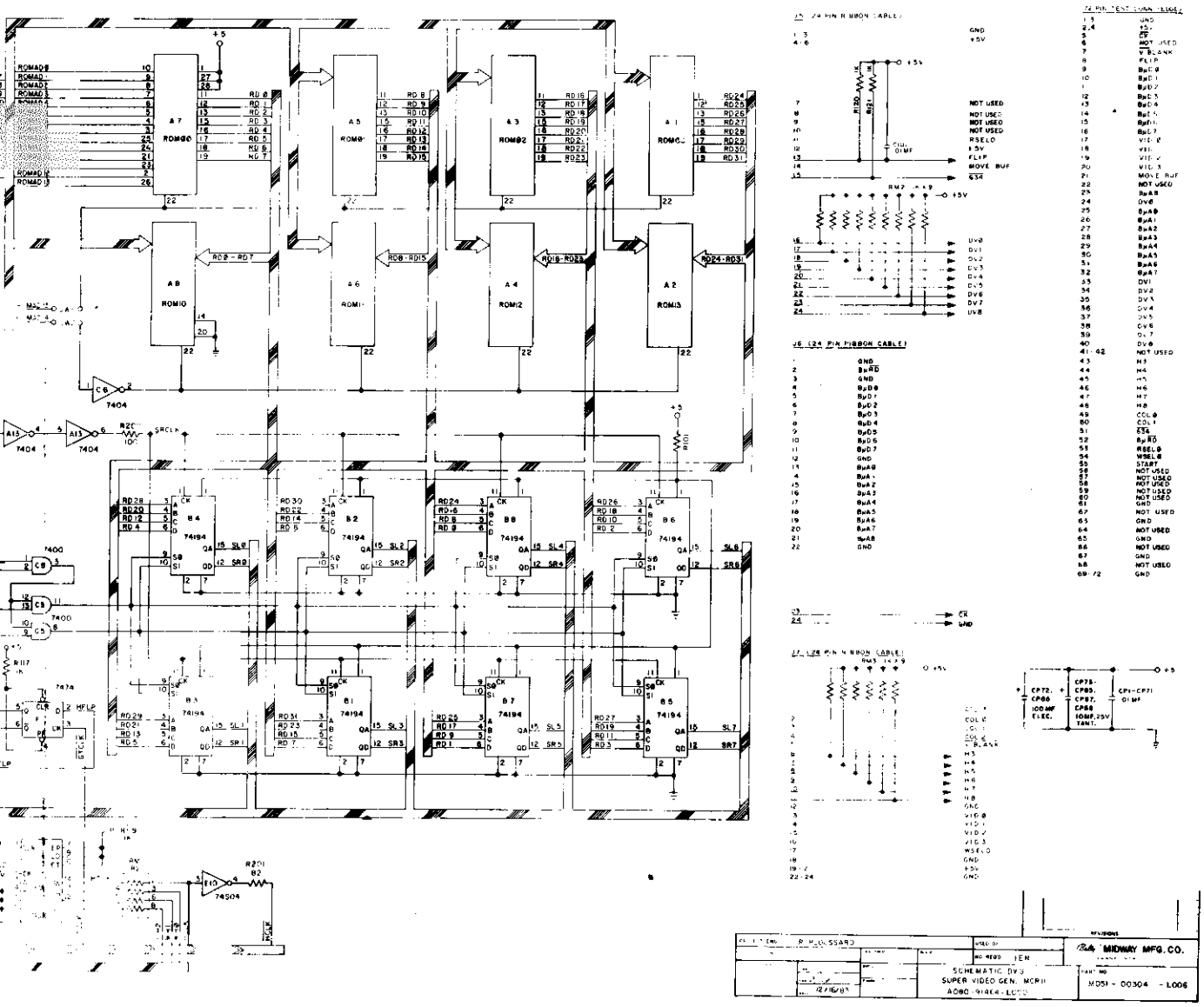

A7 ROM00
A5 ROM01
A3 ROM02
A1 ROM03
A8 ROM10
A6 ROM11
A4 ROM12
A2 ROM13
B4 74194
B2 74194
B8 74194
B6 74194
B3 74194
B1 74194
B7 74194
B5 74194
7404
7400
74S04
+5
GND
+5V
NOT USED
RSELO
FLIP
MOVE BUF
DV0
DV1
DV2
DV3
DV4
DV5
DV6
DV7
DV8
GND
BLANK
VID 0
VID 1
VID 2
VID 3
WSELO
+5V
CP72, CP86 100MF ELEC.
CP75-CP85, CP87, CP88 10MF,25V TANT.
CP1-CP71 .01 MF
REVISIONS
R. PLOUSSARD
MIDWAY MFG. CO.
SCHEMATIC DV3
SUPER VIDEO GEN. MCR II
A080-91464-L000
12/16/83
MD51-00304-L006

# DESIGNATION LIST

| DESIGNATION | DESCRIPTION |
|---|---|
| C101 | .01 MF AX CER |
| C301-C308 | 100 PF AX CER |
| CP1-CP71 | .01 MF AX CER |
| CP72,CP86 | 100 MF AX ELECT. |
| CP73-CP85,CP87, CP88 | 10 MF 25V AX TANT. |
| CP89,CP90,CP91 | .01MF AX. CER. |
| R101-R111,R113-R121 | 1K OHM 1/4W |
| R122,R123 | 560 OHM 1/4W |
| R200 | 100 OHM 1/4W |
| R201 R202 | 82 OHM 1/4W |
| R203 | 1K OHM 1/4W |
| RM1 | 82 OHM 8 PIN SIP |
| RM 2 | 1K 10 PIN SIP |
| RM 3 | 1K 10 PIN SIP |
| RM 4 | 1K 9 PIN SIP |
| RM 5 | 1K 9 PIN SIP |
| RM 6 | 1K 9 PIN SIP |
| RM 7 | 1K 9 PIN SIP |
| IC 1A | EPROM |
| IC 2A | EPROM |
| IC 3A | EPROM |
| IC 4A | EPROM |
| IC 5A | EPROM |
| IC 6A | EPROM |
| IC 7A | EPROM |
| IC 8A | EPROM |
| IC 9A | 74LS86 |
| IC 10A | 74LS86 |
| IC 11A | 74LS174 |
| IC 12A | 74LS273 |
| IC 13A | 74S04 |
| IC 1B | 74LS194 |
| IC 2B | 74LS194 |
| IC 3B | 74LS194 |
| IC 4B | 74LS194 |
| IC 5B | 74LS194 |
| IC 6B | 74LS194 |
| IC 7B | 74LS194 |
| IC 8B | 74LS194 |
| IC 9B | 74LS161 |
| IC 10B | 74LS174 |
| IC 11B | 74LS174 |
| IC 12B | 74S283 |
| IC 13B | 74S283 |
| IC 1C | 74LS258 |
| IC 2C | 74LS258 |
| IC 3C | 74LS258 |
| IC 4C | 74LS258 |
| IC 5C | 74LS00 |
| IC 6C | 74LS04 |
| IC 7C | 74LS74 |
| IC 8C | 74LS30 |
| IC 9C | 74LS169 |
| IC 10C | 74LS169 |
| IC 11C | 74LS169 |
| IC 12C | 74LS169 |
| IC 13C | 74S133 |

| DESIGNATION | DESCRIPTION |
|---|---|
| IC 1D | 7420 |
| IC 2D | 93479 |
| IC 3D | 93479 |
| IC 4D | 7420 |
| IC 5D | 93479 |
| IC 6D | 93479 |
| IC 7D | 93422 |
| IC 8D | 93422 |
| IC 9D | 93422 |
| IC 10D | 93422 |
| IC 12D | STAT. RAM |
| IC 13D | 74LS245 |
| IC 1E | 74LS374 |
| IC 2E | 74LS374 |
| IC 3E | 74LS374 |
| IC 4E | 74LS374 |
| IC 5E | 74LS374 |
| IC 6E | 74LS374 |
| IC 7E | 74LS240 |
| IC 8E | 74LS00 |
| IC 9E | 74S161 |
| IC 10E | 74S04 |
| IC 1F | 74LS74 |
| IC 2F | 74LS74 |
| IC 3F | 74LS157 |
| IC 4F | 74S00 |
| IC 5F | 74LS32 |
| IC 7F | 74LS283 |
| IC 8F | 74LS175 |
| IC 9F | 74LS157 |
| IC 10F | 74LS157 |
| IC 12F | 74LS157 |
| IC 13F | 74LS157 |
| IC 1G | 74LS74 |
| IC 3G | 74S08 |
| IC 4G | 74LS30 |
| IC 5G | 74LS30 |
| IC 7G | 74LS283 |
| IC 8G | 74LS174 |
| IC 9G | 74LS10 |
| IC 10G | 74LS157 |
| IC 12G | 74LS157 |
| IC 13G | 74LS157 |
| IC 1H | 74LS32 |
| IC 2H | 74S86 |
| IC 3H | 74LS240 |
| IC 11H | 7420 |
| IC 12H | 7420 |
| IC 13H | 74LS74 |
| ICS1A-ICS8A | 28 PIN SOCKET |
| ICS D2,D3,D5-D10 | 22 PIN SOCKET |
| ICS D12 | 24 PIN SOCKET |
| J5,J6,J7 | KK100 RT ANGLE 24 PIN CONN. |
| JW 1, JW2 | JUMPER WIRE |
| MCR III SUPER VIDEO GEN. | A082-91464-L000 |

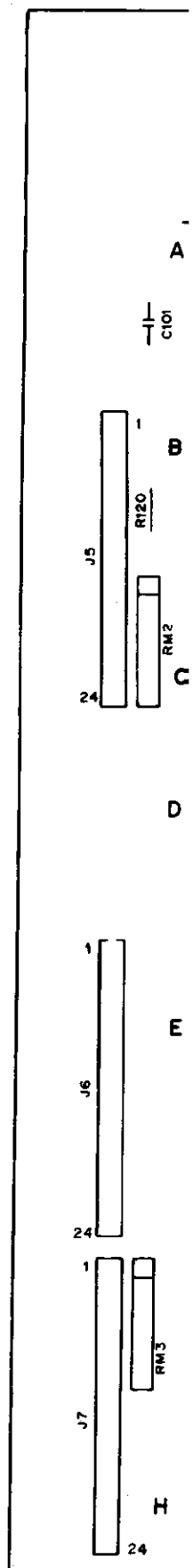

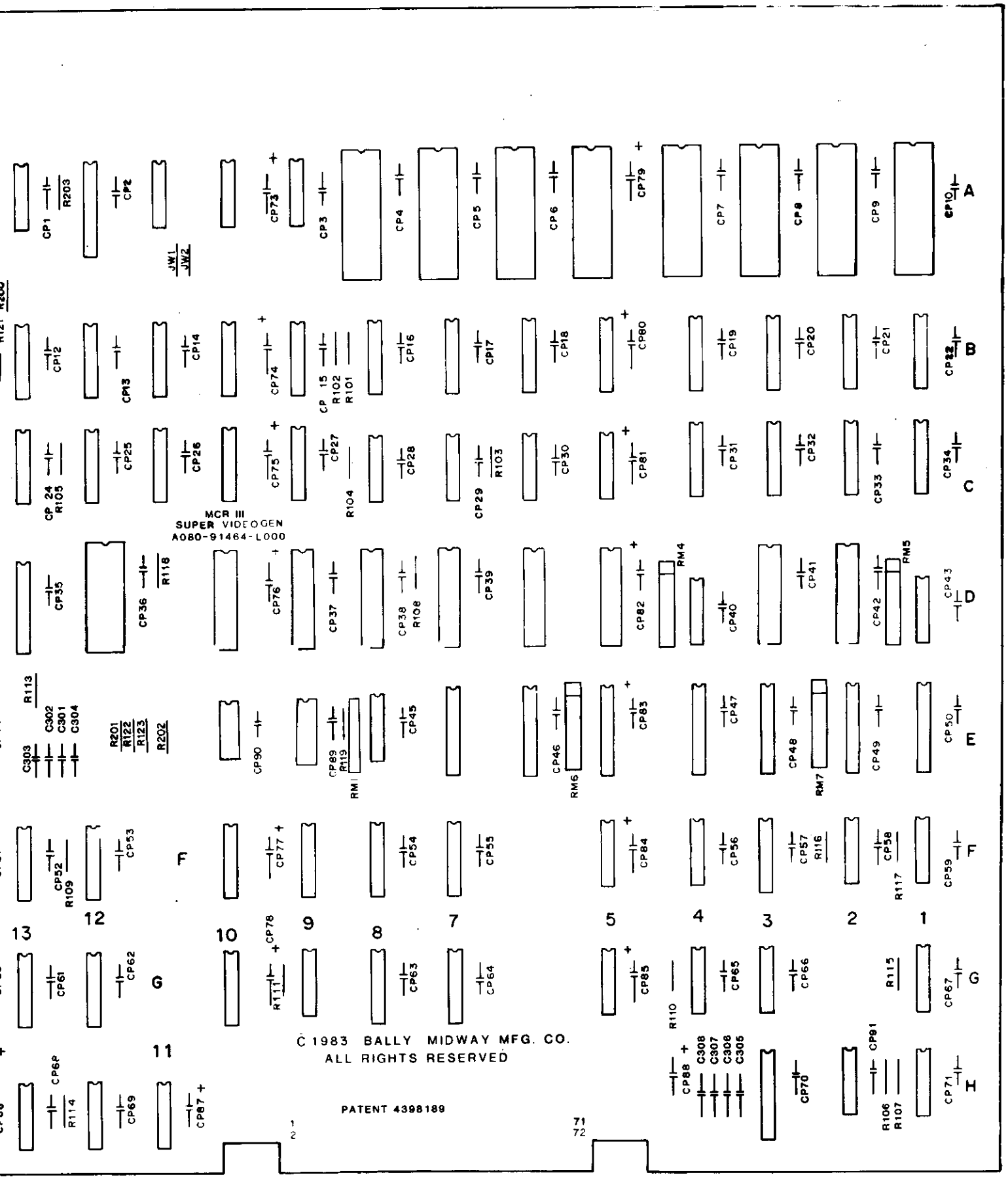
MCR III
SUPER VIDEOGEN
A080-91464-L000
A
B
C
D
E
F
G
H
13
12
10
9
8
7
5
4
3
2
1
11
JW1
JW2
RM4
RM5
RM6
RM7
RM1
R203
R102
R101
R104
R103
R105
R118
R113
R201
R122
R123
R202
R119
R109
R116
R117
R111
R110
R115
R114
R106
R107
C308
C307
C306
C305
C302
C301
C304
C303
C6P
C1983 BALLY MIDWAY MFG. CO.
ALL RIGHTS RESERVED
PATENT 4398189

## CROSS REFERENCE LIST

| DESCRIPTION | QTY | DESIGNATION NO. | PART NOS. |
|---|---|---|---|
| CAP 100 PF | 8 | C301-C308 | 0986-00800-1000 |
| CAP .01MF | 75 | C101, CP1-CP71, CP89, CP90, CP91 | 0986-00800-2500 |
| CAP 10MF | 15 | CP73-CP85, CP87, CP88 | 0986-00800-2400 |
| CAP 100MF | 2 | CP72, CP86 | 0986-00800-1800 |
| 82 OHM 1/4 W RES. | 2 | R201, R202 | 100E-00005-0031 |
| 100 OHM 1/4 W RES. | 1 | R200 | 100E-00005-0033 |
| 1K OHM 1/4 W RES. | 21 | R101-R111, R113-R121, R203 | 100E-00005-0061 |
| 560 OHM 1/4W RES. | 2 | R122, R123 | 100E-00005-0054 |
| 8 PIN SIP 82 OHM | 1 | RM1 | 102E-00004-0035 |
| 9 PIN SIP 1K OHM | 4 | RM4-RM7 | 102E-00004-0011 |
| 10 PIN SIP 1K OHM | 2 | RM2, RM3 | 102E-00004-0013 |
| 74S00 | 1 | 4F | 0304-00803-0047 |
| 74LS00 | 2 | 5C, 8E | 0304-00803-0010 |
| 74S04 | 2 | 13A, 10E | 0304-00803-0011 |
| 74LS04 | 1 | 6C | 0304-00803-0012 |
| 74S08 | 1 | 3G | 0304-00803-0037 |
| 74LS10 | 1 | 9G | 0304-00803-0014 |
| 7420 | 4 | 1D, 4D, 11H, 12H | 0304-00803-0015 |
| 74LS30 | 3 | 8C, 4G, 5G | 0304-00803-0016 |
| 74LS32 | 2 | 5F, 1H | 0304-00803-0017 |
| 74LS74 | 5 | 7C, 1F, 2F, 1G, 13H | 0304-00803-0018 |
| 74S86 | 1 | 2H | 0304-00803-0049 |
| 74LS86 | 2 | 9A, 10A | 0304-00803-0019 |
| 74S133 | 1 | 13C | 0304-00803-0020 |
| 74LS157 | 8 | 3F, 9F, 10F, 12F, 13F, 10G, 12G, 13G | 0304-00803-0021 |
| 74S161 | 1 | 9E | 0304-00803-0038 |
| 74LS161 | 1 | 9B | 0304-00803-0022 |
| 74LS169 | 4 | 9C-12C | 0304-00803-0023 |
| 74LS174 | 4 | 11A, 10B, 11B, 8G | 0304-00803-0024 |
| 74LS175 | 1 | 8F | 0304-00803-0025 |
| 74LS194 | 8 | 1B-8B | 0304-00803-0026 |
| 74LS240 | 2 | 7E, 3H | 0304-00803-0050 |
| 74LS245 | 1 | 13D | 0304-00803-0027 |
| 74LS258 | 4 | 1C-4C, | 0304-00803-0028 |
| 74LS273 | 1 | 12A | 0304-00803-0029 |
| 74S283 | 2 | 12B, 13B | 0304-00803-0039 |
| 74LS283 | 2 | 7F, 7G | 0304-00803-0030 |
| 74LS374 | 6 | 1E-6E | 0304-00803-0031 |
| 93422 | 4 | 7D-10D | 0304-00803-0032 |
| 93479 | 4 | 2D, 3D, 5D, 6D | 0304-00803-0033 |
| STAT. RAM | 1 | 12D | 0304-00803-0034 |
| EPROM KIT | 8 | IC 1A-8A | SEE NOTE |
| 28 PIN SOCKET | 8 | ICS 1A-8A | 0986-00804-0300 |
| 22 PIN SOCKET | 8 | ICS 2D, 3D, 5D, 6D, 7D-10D | 0986-00804-0700 |
| 24 PIN SOCKET | 1 | ICS 12D | 0986-00804-1600 |
| KK100 RT. ANGLE 24 PIN CONN. | 3 | J5, J6, J7 | 0986-00804-4700 |
| JUMPER WIRE | 2 | JW1, JW2 | 0986-00805-0200 |
| MCR III SUPER VIDEO GEN. | | | A082-91464-L000 |

NOTE : ROM PART NUMBERS
AT BACK OF CATALOG.

REVISIONS

| | | | | |
|---|---|---|---|---|
| PROJECT ENG: R. PLOUSSARD | | | USED ON | Bally / MIDWAY MFG. CO. FRANKLIN PK ILL |
| DO NOT SCALE DWG. | HEAT TREAT | SCALE FULL | NO. REQ'D 1 PER | |
| DIM TOLERANCES UNLESS SPECIFIED | DWN. TBB | MAT'L. | SUPER VIDEO GEN. MCR III ASSY DWG A082-91464-L000 | PART NO. M051 - 00304 - L005 |
| CONCENTRICITY FRACTIONAL DECIMAL HOLE DIA | CKD. | FINISH | | |
| | DATE 12/19/83 | | | |

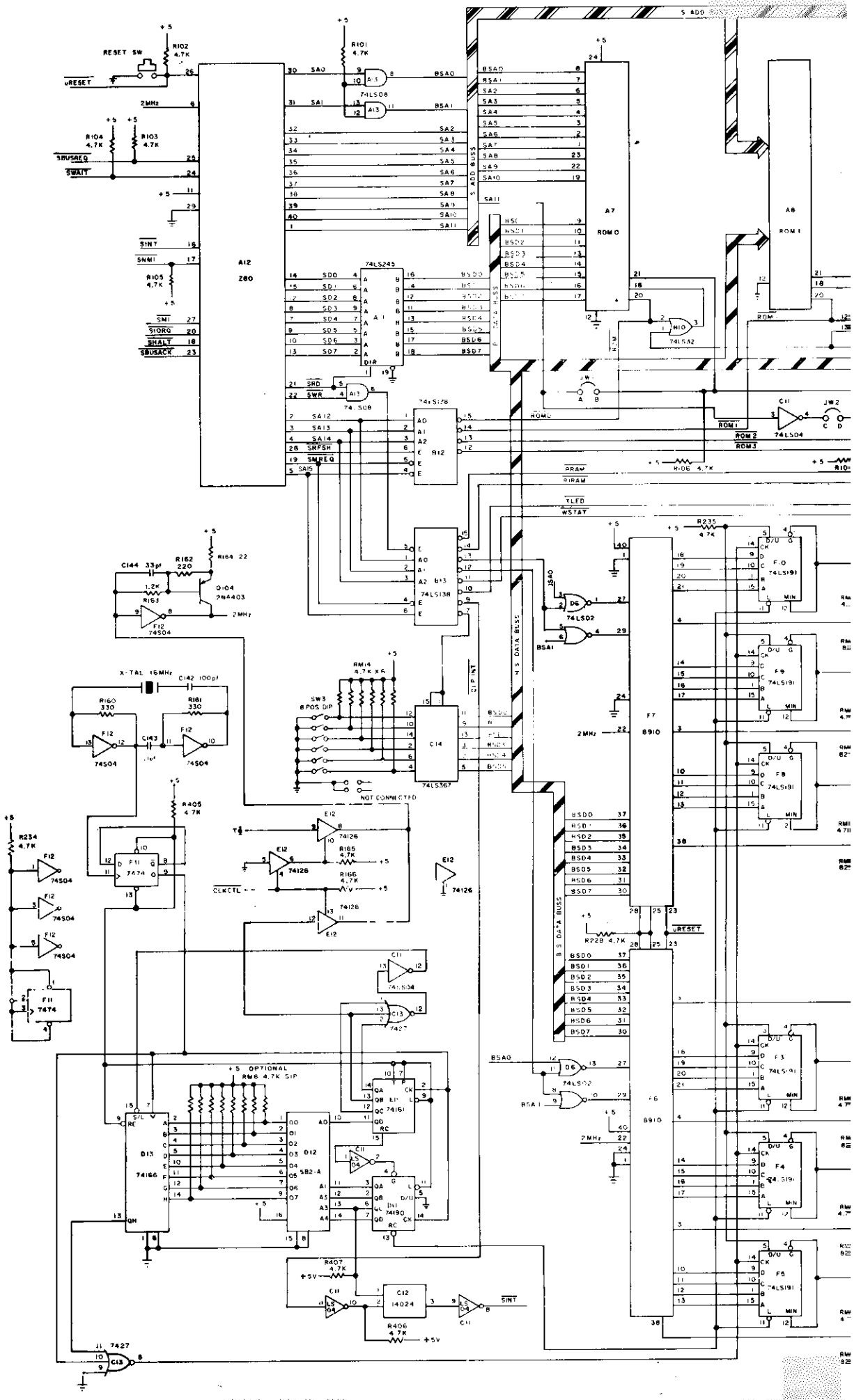
RESET SW
R102 4.7K
R101 4.7K
74LS08
R104 4.7K
R103 4.7K
SBUSREQ
SWAIT
SINT
SNMI
R105 4.7K
SMI
SIORQ
SHALT
SBUSACK
A12 Z80
74LS245
A7 ROM 0
A8 ROM 1
74LS32
74LS138
B12
B13
74LS04
ROM 2
ROM 3
PRAM
RIRAM
TLED
WSTAT
R235 4.7K
F-0 74LS191
F9 74LS191
F8 74LS191
F3 74LS191
F4 74LS191
F5 74LS191
F7 8910
F6 8910
74LS02
R228 4.7K
H S DATA BUSS
B S DATA BUSS
S ADD BUSS
C144 33pf
R162 220
R164 22
Q104 2N4403
R163 1.2K
F12 74504
2MHz
X-TAL 16MHz
C142 100pf
R160 330
R161 330
C143
RM14 4.7K X6
SW3 8 POS DIP
C14 74LS367
NOT CONNECTED
R405 4.7K
R234 4.7K
F11 7474
E12 74126
R165 4.7K
R166 4.7K
CLKCTL
C11
C13 7427
+5 OPTIONAL RM6 4.7K SIP
D13 74166
D12 SB2-A
D11 74190
C12 14024
R407 4.7K
R406 4.7K
+5V
SINT
7427

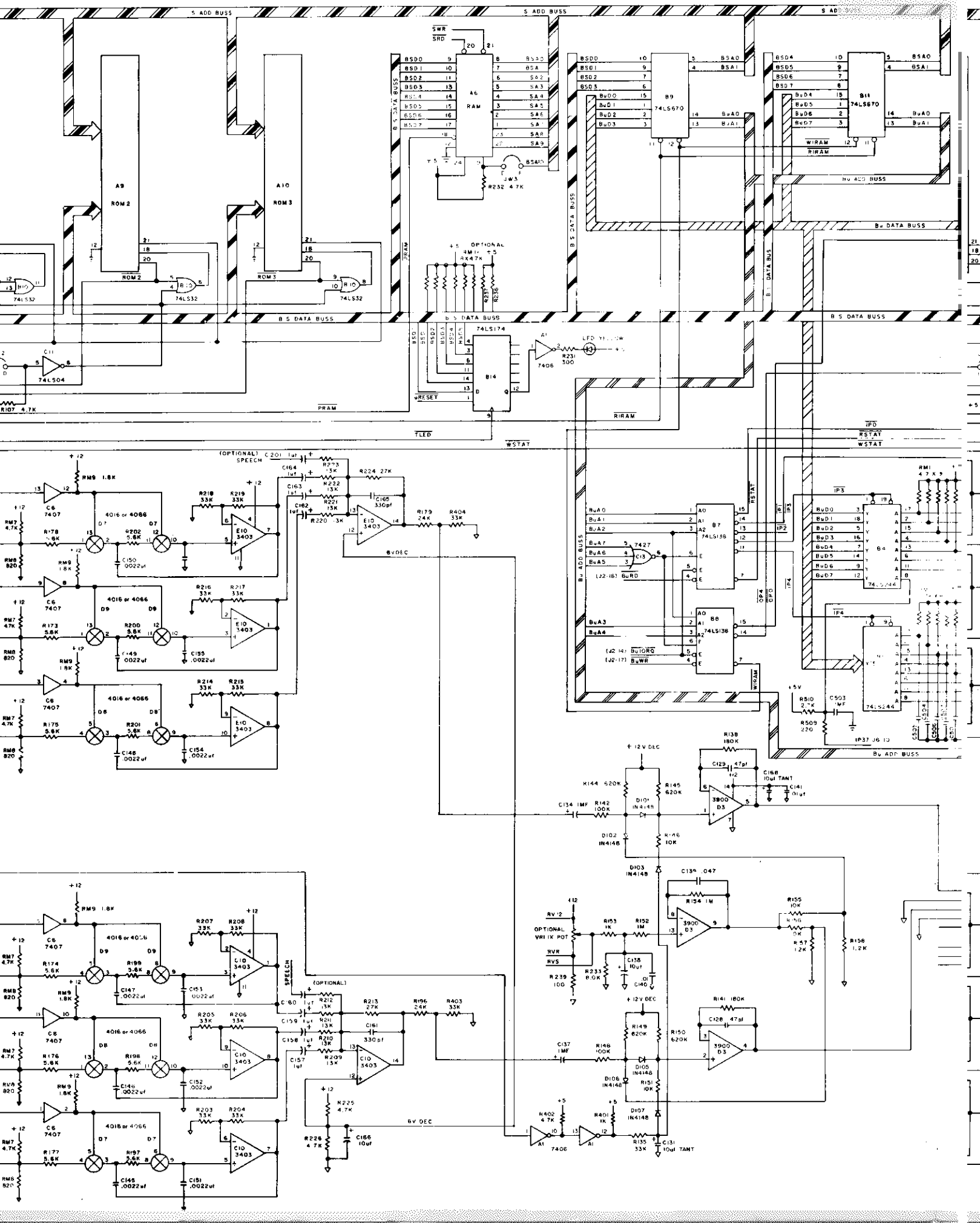
S ADD BUSS
B S DATA BUSS
Bu ADD BUSS
Bu DATA BUSS
A9 ROM 2
A10 ROM 3
A6 RAM
B9 74LS670
B11 74LS670
B14 74LS174
B7 74LS138
B8 74LS138
B4 74LS244
74LS32
74LS04
7407
7406
7427
4016 or 4066
E10 3403
C10 3403
3900 D3
(OPTIONAL) SPEECH
OPTIONAL VR1 1K POT
+12V DEC
6V DEC
WIRAM
RIRAM
PRAM
TLED
WSTAT
RSTAT
IP3
IP4
IP37 J6 10

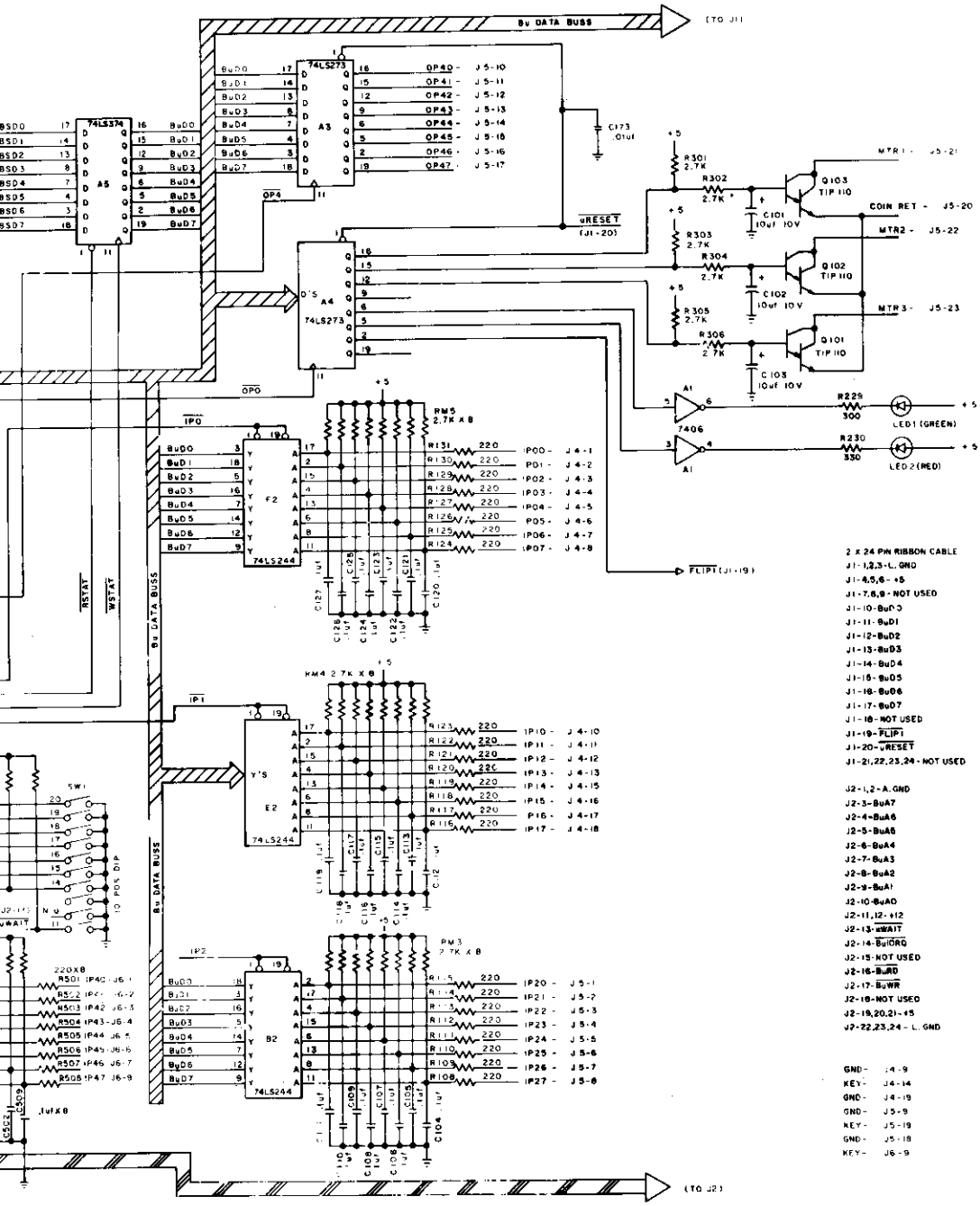


| 2 X 24 PIN RIBBON CABLE | 72 PIN TEST CONN | |
|---|---|---|
| J1-1,2,3-L. GND | 1 - L.GND | 37 - SA4 |
| J1-4,5,6- +5 | 2 - +5 | 38 - SA5 |
| J1-7,8,9 - NOT USED | 3 - L.GND | 39 - SA6 |
| J1-10-BuD0 | 4 - +5 | 40 - SA7 |
| J1-11-BuD1 | 5 - +12 | 41 - SA8 |
| J1-12-BuD2 | 6 - A GND | 42 - SA9 |
| J1-13-BuD3 | 7 - +12 | 43 - SA10 |
| J1-14-BuD4 | 8 - NOT USED | 44 - SA11 |
| J1-15-BuD5 | 9 - BuD0 | 45 - SA12 |
| J1-16-BuD6 | 10 - BuD1 | 46 - SA13 |
| J1-17-BuD7 | 11 - BuD2 | 47 - SA14 |
| J1-18-NOT USED | 12 - BuD3 | 48 - SA15 |
| J1-19-$\overline{\text{FLIP1}}$ | 13 - BuD4 | 49 - $\overline{\text{SNMI}}$ |
| J1-20-$\overline{\text{uRESET}}$ | 14 - BuD5 | 50 - $\overline{\text{SINT}}$ |
| J1-21,22,23,24 - NOT USED | 15 - BuD6 | 51 - $\overline{\text{SM1}}$ |
| | 16 - BuD7 | 52 - $\overline{\text{SBUSACK}}$ |
| J2-1,2-A.GND | 17 - SD0 | 53 - $\overline{\text{BuRD}}$ |
| J2-3-BuA7 | 18 - SD1 | 54 - $\overline{\text{BuWR}}$ |
| J2-4-BuA6 | 19 - SD2 | 55 - $\overline{\text{uRESET}}$ |
| J2-5-BuA5 | 20 - SD3 | 56 - $\overline{\text{T}}$ |
| J2-6-BuA4 | 21 - SD4 | 57 - $\overline{\text{CLKCTL}}$ |
| J2-7-BuA3 | 22 - SD5 | 58 - $\overline{\text{SRD}}$ |
| J2-8-BuA2 | 23 - SD6 | 59 - $\overline{\text{SWR}}$ |
| J2-9-BuA1 | 24 - SD7 | 60 - $\overline{\text{SIORQ}}$ |
| J2-10-BuA0 | 25 - BuA0 | 61 - $\overline{\text{BuIORQ}}$ |
| J2-11,12-+12 | 26 - BuA1 | 62 - $\overline{\text{SMREQ}}$ |
| J2-13-$\overline{\text{uWAIT}}$ | 27 - BuA2 | 63 - $\overline{\text{SBUSREQ}}$ |
| J2-14-$\overline{\text{BuIORQ}}$ | 28 - BuA3 | 64 - $\overline{\text{SRFSH}}$ |
| J2-15-NOT USED | 29 - BuA4 | 65 - L.GND |
| J2-16-$\overline{\text{BuRD}}$ | 30 - BuA5 | 66 - $\overline{\text{SWAIT}}$ |
| J2-17-$\overline{\text{BuWR}}$ | 31 - BuA6 | 67 - L.GND |
| J2-18-NOT USED | 32 - BuA7 | 68 - $\overline{\text{SHALT}}$ |
| J2-19,20,21-+5 | 33 - SA0 | 69 - NOT USED |
| J2-22,23,24 - L.GND | 34 - SA1 | 70 - +5 |
| | 35 - SA2 | 71 - L.GND |
| | 36 - SA3 | 72 - +5 |

GND - J4-9
KEY - J4-14
GND - J4-19
GND - J5-9
KEY - J5-19
GND - J5-18
KEY - J6-9

* USED ON VERSION W/PANNING
NOT USED ON VERSION W#/PANNING

** NOT USED ON VERSION W/PANNING
USED ON VERSION W#/PANNING

NOTE

| ROM JUMPER OPTIONS | | |
|---|---|---|
| EPROM/ROM | JW1 | JW2 |
| 2532 COMPATABILITY | | X |
| 2732 COMPATABILITY | X | |

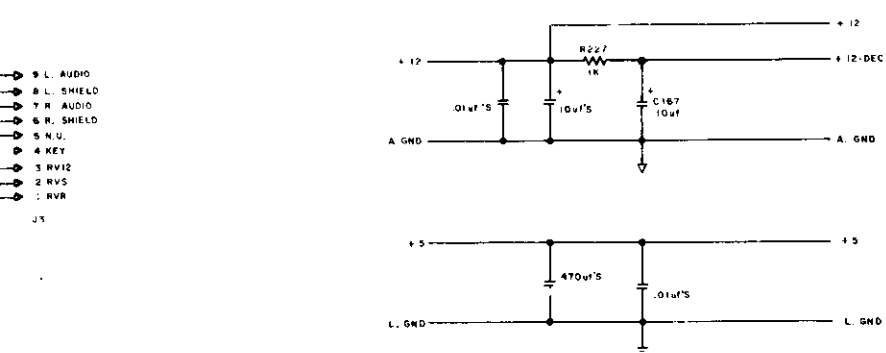


REVISIONS

| | | | |
|---|---|---|---|
| PROJECT ENG J. JARON | | USED ON | Bally / MIDWAY MFG. CO. |
| | | NO REQ'D 1 PER | |
| DRN 7/47 | | SCHEMATIC DRAWING SUPER SOUND I/O A080-90913 G000 | PART NO M051-00986-G016 |
| CKD | | | |
| DATE 12/16/83 | | | |

# DESIGNATION LIST

| DESIGNATION NO. | DESCRIPTION |
|---|---|
| C101-C103 | 10 MF 25V AX. TANT. |
| C104-C127 | .1 MF 50V AX. CER. |
| C128,C129 | 47 PF 50V AX. CER. |
| C131 | 10 MF 25V AX. TANT. |
| C134-C137 | 1 MF 20V AX. TANT. |
| C138 | 10 MF 25V AX. TANT. |
| C139 | .047 MF 100V MYLAR |
| C140 | .01 MF 50V AX. CER. |
| C142 | 100 PF 50V AX. CER. |
| C143 | .1 MF 50V AX. CER. |
| C144 | 33 PF 50V AX. CER. |
| C145-C156 | .0022 MF 100V 10% MYLAR |
| C157-C159 | 1 MF 20V AX. TANT. |
| C161 | 330 PF 50V AX. CER. |
| C162-C164 | 1 MF 20V AX. TANT. |
| C165 | 330 PF 50V AX. CER. |
| C166,C167 | 10 MF 25V AX. TANT. |
| C172 | 10 MF 25V AX. TANT. |
| C173 | .01 MF 50V AX. CER. |
| C501-C509 | .1 MF 50V AX. CER. |
| CP1 | 470 MF 16V AX. ELECT. |
| CP2-CP12 | .01 MF 50V AX. CER. |
| CP13 | 470 MF 16V AX. ELECT. |
| CP14-CP19 | .01 MF 50V AX. CER. |
| CP20 | 10 MF 25V AX. TANT. |
| CP21-CP27 | .01 MF 50V AX. CER. |
| CP29-CP33 | .01 MF 50V AX. CER. |
| CP34 | 10 MF 25V AX. TANT. |
| CP35-CP46 | .01 MF 50V AX. CER. |
| CP47 | 470 MF 16V AX. ELECT. |
| CP48-CP51 | .01 MF 50V AX. CER. |
| CP52,CP53 | 10 MF 25V AX. TANT. |
| CP54 | 470 MF 16V AX. ELECT. |
| CP202-CP204 | 10 MF 25V AX. TANT. |
| R101-R107 | 4.7K OHM 1/4W 5% CRBN. |
| R108-R131 | 220 OHM 1/4W 5% CRBN. |
| R133 | 33K OHM 1/4W 5% CRBN. |
| R138,R141 | 180K OHM 1/4W 5% CRBN. |
| R142 | 100K OHM 1/4W 5% CRBN. |
| R144,R145 | 620K OHM 1/4W 5% CRBN. |
| R146 | 10K OHM 1/4W 5% CRBN. |
| R148 | 100K OHM 1/4W 5% CRBN. |
| R149,R150 | 620K OHM 1/4W 5% CRBN. |
| R151 | 10K OHM 1/4W 5% CRBN. |
| R152 | 1MEG. OHM 1/4W 5% CRBN. |
| R153 | 1K OHM 1/4W 5% CRBN. |
| R154 | 1MEG. OHM 1/4W 5% CRBN. |
| R155,R156 | 10K OHM 1/4W 5% CRBN. |
| R157,R158 | 1.2K OHM 1/4W 5% CRBN. |
| R160,R161 | 330 OHM 1/4W 5% CRBN. |
| R162 | 220 OHM 1/4W 5% CRBN. |
| R163 | 1.2K OHM 1/4W 5% CRBN. |
| R164 | 22 OHM 1/4W 5% CRBN. |
| R165,R166 | 4.7K OHM 1/4W 5% CRBN. |
| R173-R178 | 5.6K OHM 1/4W 5% CRBN. |
| R179 | 24K OHM 1/4W 5% CRBN. |
| R196 | 24K OHM 1/4W 5% CRBN. |
| R197-R202 | 5.6K OHM 1/4W 5% CRBN. |
| R203-R208 | 33K OHM 1/4W 5% CRBN. |
| R209-R211 | 13K OHM 1/4W 5% CRBN. |
| R213 | 27K OHM 1/4W 5% CRBN. |
| R214-R219 | 33K OHM 1/4W 5% CRBN. |
| R220-R222 | 13K OHM 1/4W 5% CRBN. |
| R224 | 27K OHM 1/4W 5% CRBN. |
| R225,R226 | 4.7K OHM 1/4W 5% CRBN. |
| R227 | 1K OHM 1/4W 5% CRBN. |
| R228 | 4.7K OHM 1/4W 5% CRBN. |
| R231 | 300 OHM 1/4W 5% CRBN. |
| R232 | 4.7K OHM 1/4W 5% CRBN. |
| R233 | 3K OHM 1/4W 5% CRBN. |
| R234,R235 | 4.7K OHM 1/4W 5% CRBN. |
| R239 | 100 OHM 1/4W 5% CRBN. |
| R301-R306 | 2.7K OHM 1/4W 5% CRBN. |
| R401 | 1K OHM 1/4W 5% CRBN. |
| R402 | 4.7K OHM 1/4W 5% CRBN. |
| R403,R404 | 33K OHM 1/4W 5% CRBN. |
| R405-R407 | 4.7K OHM 1/4W 5% CRBN. |
| R501-R509 | 220 OHM 1/4W 5% CRBN. |
| R510 | 2.7K OHM 1/4W 5% CRBN. |
| RM1 | 4.7K OHM 10 PIN S.I.P. |
| RM2-RM5 | 2.7K OHM 10 PIN S.I.P. |
| RM7 | 4.7K OHM 8 PIN S.I.P. |
| RM8 | 820 OHM 8 PIN S.I.P. |
| RM9 | 1.8K OHM 10 PIN S.I.P. |
| RM14 | 4.7K OHM 10 PIN S.I.P. |
| D101-D103 | 1N4148 |
| D105-D107 | 1N4148 |
| Q101-Q103 | T1P110 |
| Q104 | 2N4403 |
| IC1A | 7406 |
| IC3A,4A | 74LS273 |
| IC5A | 74LS374 |
| IC6A | 1K X 8 RAM |
| IC7A | ROM/EPROM 0 |
| IC8A | ROM/EPROM 1 |
| IC9A | ROM/EPROM 2 |
| IC10A | ROM/EPROM 3 |
| IC11A | 74LS245 |
| IC12A | Z-80 CPU |
| IC13A | 74LS08 |
| IC2B,4B,5B | 74LS244 |
| IC7B,8B | 74LS138 |
| IC9B | 74LS670 |
| IC10B | 74LS32 |
| IC11B | 74LS670 |
| IC12B,13B | 74LS138 |
| IC14B | 74LS174 |
| IC6C | 7407 |
| IC10C | MC3403 |
| IC11C | 74LS04 |
| IC12C | MC14024 |
| IC13C | 7427 |
| IC14C | 74LS367 |
| IC3D | LM3900 |
| IC6D | 74LS02 |
| IC7D-9D | MC14016 |
| IC11D | 74190 |
| IC12D | PROMS82A |
| IC13D | 74166 |
| IC2E | 74LS244 |
| IC10E | MC3403 |
| IC11E | 74161 |
| IC12E | 74126 |
| IC2F | 74LS244 |
| IC3F-5F | 74LS191 |
| IC6F,7F | AY-3-8910 |
| IC8F-10F | 74LS191 |
| IC11F | 7474 |
| IC12F | 74S04 |
| ICS6A-ICS10A | 24 PIN IC SOCKET |
| ICS12A | 40 PIN IC SOCKET |
| ICS12D | 16 PIN IC SOCKET |
| ICS6F,7F | 40 PIN IC SOCKET |
| J1,J2 | 24 PIN KK100 RT. ANGLE |
| J3 | 9 PIN KK100 RT. ANGLE OMIT 4 |
| J4 | 19 PIN KK100 RT. ANGLE OMIT 14 |
| J5 | 23 PIN KK100 RT. ANGLE OMIT 19 |
| J6 | 10 PIN KK100 RT. ANGLE OMIT 8 |
| JW1,JW2 | JUMPER WIRE |
| LED 3 | YELLOW LED |
| SW1 | 10 POSITION DIP |
| SW3 | 8 POSITION DIP |
| SW4 | PUSHBUTTON S.W. |
| XTAL 1 | 16 MHZ XTAL |
| MHQ101-MHQ103 | SNAP |
| A080-90913-G000 | SUPER SND. I/O BD. |

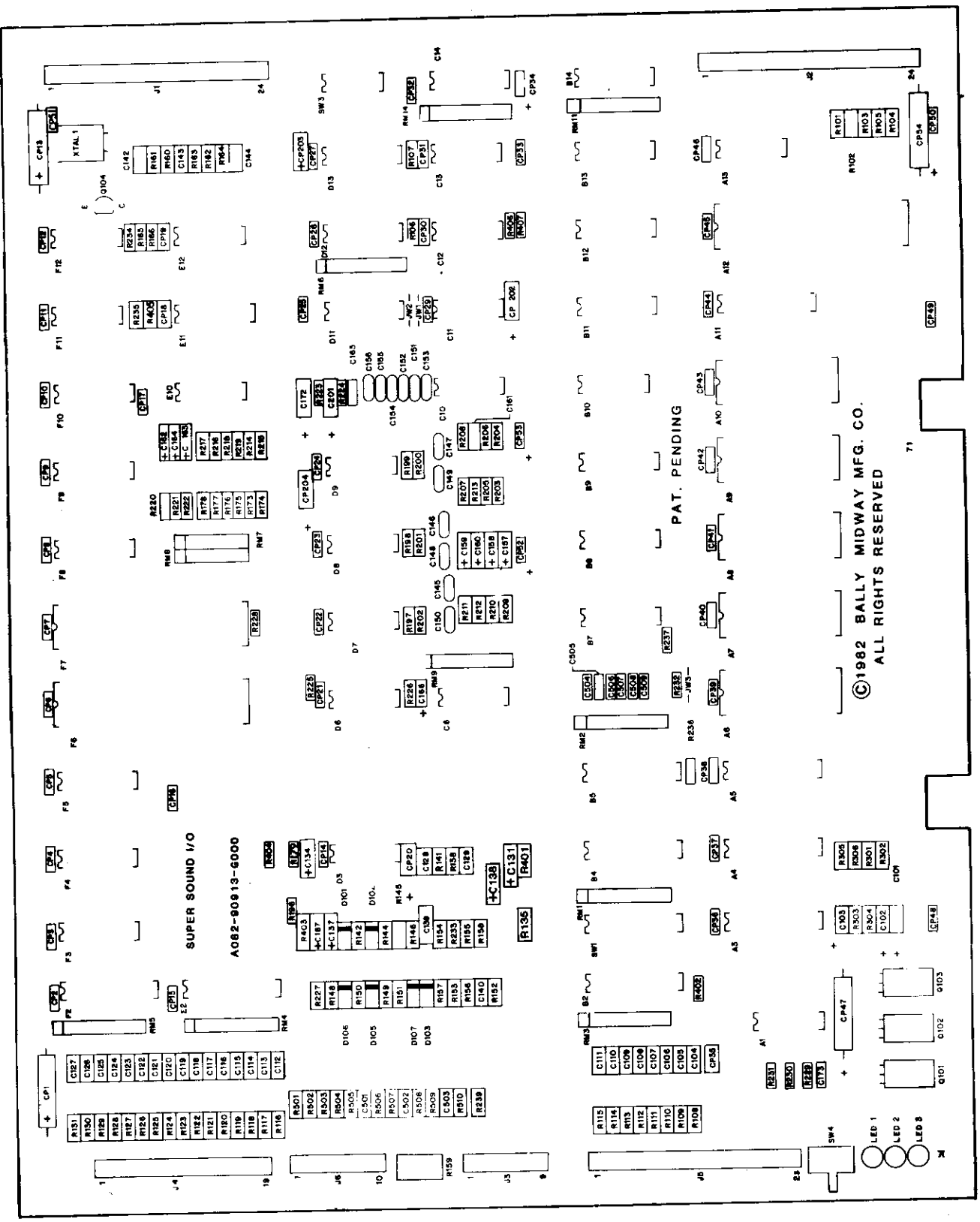


**DESCRIPTION**

33 PF 50V 5% AX. CER.
47 PF 50V AX. CER.
100 PF 50V 5% AX. CER.
330 PF 50V AX. CER.
.0022 MF 100V 10% MYLAR
.047 MF 100V MYLAR
.01 MF 50V AX. CER.

.1 MF 50V AX. CER.

1 MF 20V AX. TANT.

10 MF 25V AX. TANT.

470 MF 16V AX. ELECT.

22 OHM 1/4W 5% CRBN.
100 OHM 1/4W 5% CRBN.
220 OHM 1/4W 5% CRBN.
300 OHM 1/4W 5% CRBN.
330 OHM 1/4W 5% CRBN.
1K OHM 1/4W 5% CRBN.
1.2K OHM 1/4W 5% CRBN.
2.7K OHM 1/4W 5% CRBN.
3K OHM 1/4W 5% CRBN.
4.7K OHM 1/4W 5% CRBN.

5.6K OHM 1/4W 5% CRBN.
10K OHM 1/4W 5% CRBN.
13K OHM 1/4W 5% CRBN.
24K OHM 1/4W 5% CRBN.
27K OHM 1/4W 5% CRBN.
33K OHM 1/4W 5% CRBN.

100K OHM 1/4W 5% CRBN.
180K OHM 1/4W 5% CRBN.
620K OHM 1/4W 5% CRBN.
1 MEG. OHM 1/4W 5% CRBN.

820 OHM 8 PIN S.I.P.
1.8K OHM 10 PIN S.I.P.
2.7K OHM 10 PIN S.I.P.
4.7K OHM 8 PIN S.I.P.
4.7K OHM 10 PIN S.I.P.

## CROSS REFERENCE LIST

| QTY | DESIGNATION NO. | PART NOS. |
|---|---|---|
| 1 | C144 | 0986-00800-0300 |
| 2 | C128,C129 | 0986-00800-2800 |
| 1 | C142 | 0986-00800-1000 |
| 2 | C161,C165 | 0986-00800-1300 |
| 12 | C145-C156 | 0986-00800-1200 |
| 1 | C139 | 0986-00800-2600 |
| 47 | CP2-CP12,CP14-CP19,CP21-CP27,CP29-CP33,CP35-CP46,CP48-CP51,C140,C173 | 0986-00800-2000 |
| 34 | C104-C127,C143,C501-C509 | 0986-00800-1100 |
| 8 | C134,C137,C157-C159,C162-C164 | 0986-00800-1400 |
| 15 | CP20,CP34,CP52,CP53,CP202-CP204 C101-C103,C131,C138,C166,C167,C172 | 0986-00800-0700 |
| 4 | CP1,CP13,CP47,CP54 | 0986-00800-2700 |
| 1 | R164 | 0062-063B3-1XXX |
| 1 | R239 | 0062-110B3-1XXX |
| 34 | R108-R131,R162,R501-R509 | 0062-133B3-1XXX |
| 1 | R231 | 0062-141B3-1XXX |
| 2 | R160,R161 | 0062-144B3-1XXX |
| 3 | R153,R227,R401 | 0062-179B3-1XXX |
| 3 | R157,R158,R163 | 0062-183B3-1XXX |
| 7 | R301-R306,R510 | 0062-199B3-1XXX |
| 1 | R233 | 0062-201B3-1XXX |
| 19 | R101-R107,R165,R166,R225,R226,R228,R232,R234,R235,R402,R405-R407 | 0062-211B3-1XXX |
| 12 | R173-R178,R197-R202 | 0062-215B3-1XXX |
| 4 | R146,R151,R155,R156 | 0062-227B3-1XXX |
| 6 | R209-R211,R220-R222 | 0062-233B3-1XXX |
| 2 | R179,R196 | 0062-245B3-1XXX |
| 2 | R213,R224 | 0062-247B3-1XXX |
| 15 | R135,R203-R208,R214-R219,R403,R404 | 0062-251B3-1XXX |
| 2 | R142,R148 | 0062-275B3-1XXX |
| 2 | R138,R141 | 0062-287B3-1XXX |
| 4 | R144,R145,R149,R150 | 0062-313B3-1XXX |
| 2 | R152,R154 | 0062-323B3-1XXX |
| 1 | RM8 | 0986-00805-0800 |
| 1 | RM9 | 0986-00805-0600 |
| 4 | RM2-RM5 | 0986-00805-0500 |
| 1 | RM7 | 0986-00805-0400 |
| 2 | RM1,RM14 | 0986-00805-0300 |

| DESCRIPTION | QTY | DESIGNATION NO. | PART NOS. |
|---|---|---|---|
| 1N4148 | 6 | D101-D103,D105-D107 | 0986-00801-0200 |
| 2N4403 | 1 | Q104 | 0986-00802-0500 |
| T1P110 | 3 | Q101-Q103 | 0986-00802-0400 |
| 74LS02 | 1 | IC 6D | 0986-00803-7400 |
| 74LS04 | 1 | IC 11C | 0986-00803-6900 |
| 74S04 | 1 | IC 12F | 0986-00803-6600 |
| 7406 | 1 | IC 1A | 0986-00803-7600 |
| 7407 | 1 | IC 6C | 0986-00803-5900 |
| 74LS08 | 1 | IC 13A | 0986-00803-7300 |
| 7427 | 1 | IC 13C | 0986-00803-7200 |
| 74LS32 | 1 | IC 10B | 0986-00803-6100 |
| 7474 | 1 | IC 11F | 0986-00803-6700 |
| 74126 | 1 | IC 12E | 0986-00803-6800 |
| 74LS138 | 4 | IC7B,8B,12B,13B | 0986-00803-6500 |
| 74161 | 1 | IC 11E | 0986-00803-5100 |
| 74166 | 1 | IC 13D | 0986-00803-5300 |
| 74LS174 | 1 | IC 14B | 0986-00803-7500 |
| 74190 | 1 | IC 11D | 0986-00803-9400 |
| 74LS191 | 6 | IC3F-5F,8F-10F | 0986-00803-5600 |
| 74LS244 | 5 | IC2B,4B,5B 2E,2F | 0986-00803-4800 |
| 74LS245 | 1 | IC 11A | 0986-00803-6400 |
| 74LS273 | 2 | IC3A,4A | 0986-00803-4700 |
| 74LS367 | 1 | IC 14C | 0986-00803-7000 |
| 74LS374 | 1 | IC 5A | 0986-00803-4600 |
| 74LS670 | 2 | IC9B,11B | 0986-00803-6300 |
| AY-3-8910 | 2 | IC6F,7F | 0986-00803-8500 |
| LM3900 | 1 | IC 3D | 0986-00803-4900 |
| MC3403 | 2 | IC10C,10E | 0986-00803-5000 |
| MC14016 | 3 | IC7D-9D | 0986-00803-6200 |
| MC14024 | 1 | IC 12C | 0986-00803-7100 |
| PROMSB2-A | 1 | IC 12D | 0986-00803-8200 |
| RAM 1K X 8 | 1 | IC 6A | 0986-00803-8000 |
| ROM/EPROM 0 | 1 | IC 7A | SEE NOTE |
| ROM/EPROM 1 | 1 | IC 8A | |
| ROM/EPROM 2 | 1 | IC 9A | |
| ROM/EPROM 3 | 1 | IC 10A | |
| Z-80(3880) | 1 | IC 12A | 0986-00803-5500 |
| 16 PIN IC SOCKET | 1 | ICS 12D | 0986-00804-1400 |
| 24 PIN IC SOCKET | 5 | ICS6A-ICS10A | 0986-00804-1600 |
| 40 PIN IC SOCKET | 3 | ICS12A,ICS6F,ICS7F | 0986-00804-1500 |
| 9 PIN KK 100 RT. ANGLE OMIT 4 | 1 | J3 | 3000-16366-0901 |
| 10 PIN KK 100 RT. ANGLE OMIT 8 | 1 | J6 | 3000-16366-1001 |
| 19 PIN KK 100 RT. ANGLE OMIT 14 | 1 | J4 | 3000-16366-1901 |
| 23 PIN KK 100 RT. ANGLE OMIT 19 | 1 | J5 | 3000-16366-2301 |
| 24 PIN KK 100 RT. ANGLE | 2 | J1,J2 | 0986-00804-4700 |
| JUMPER WIRE | 2 | JW1,JW2 | 0986-00804-4000 |
| YELLOW LED | 1 | LED 3 | 0986-00804-2000 |
| 8 POSITION DIP SW. | 1 | SW3 | 0986-00805-0900 |
| 10 POSITION DIP SW. | 1 | SW1 | 0986-00805-1000 |
| PB SWITCH | 1 | SW4 | 0986-00804-1700 |
| 16 MHZ XTAL W/3RD LEAD | 1 | XTAL 1 | 0986-00805-1100 |
| SNAPS | 3 | MHQ101-MHQ103 | 0017-00007-0134 |
| SUPER SND. I/O BD. | 1 | | A080-90913-G000 |

**NOTE: ROM PART NUMBERS AT BACK OF CATALOG.**

| | | | | | |
|---|---|---|---|---|---|
| PROJECT ENG: C. MEDNICK | | | USED ON | Bally / MIDWAY MFG. CO. FRANKLIN PK ILL | |
| DO NOT SCALE DWG | HEAT TREAT | SCALE FULL | NO. REQ'D 1 PER | | |
| DIM TOLERANCES UNLESS SPECIFIED DRWN. RCW CKD. 12/19/83 | MAT'L. | SUPER SOUND I/O BD. ASSEMBLY DWG. A082-90913-G000 | | PART NO. M051-00986-G015 | 5 |

REVISIONS

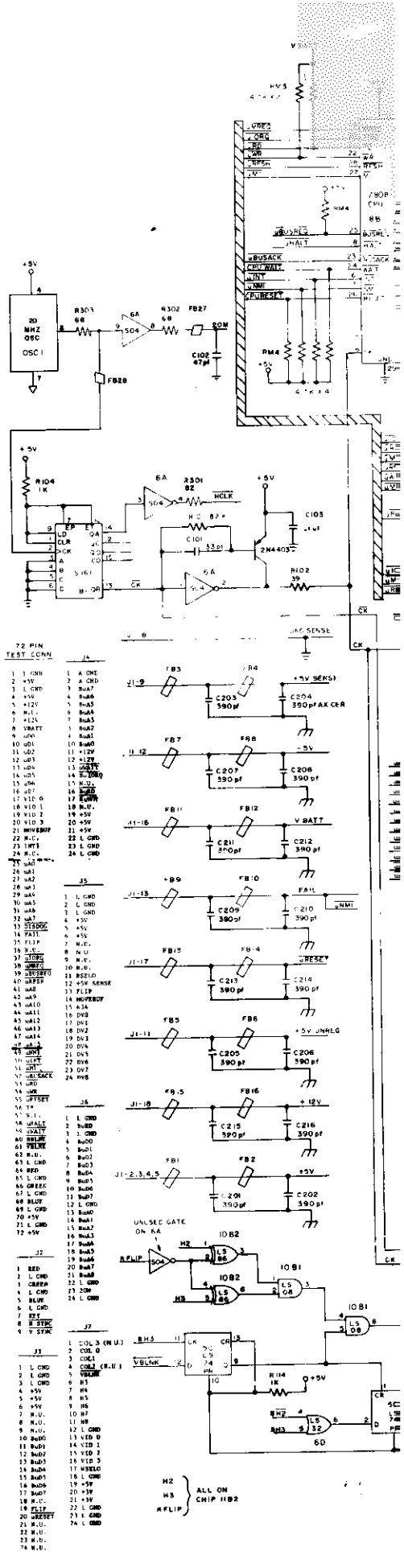

20 MHZ OSC
OSC 1
R303 68
R302 68
FB27
FB28
C102 47pf
R104 1K
R301 82
C101 33pf
C103
2N4403
R102 39
S161
72 PIN TEST CONN
J4
J5
J6
J7
J2
J3
FB3
FB4
C203 390pf
C204 390pf AX CER
FB7
FB8
C207 390pf
C208 390pf
FB11
FB12
C211 390pf
C212 390pf
FB9
FB10
C209 390pf
C210 390pf
FB13
FB14
C213 390pf
C214 390pf
FB5
FB6
C205 390pf
C206 390pf
FB15
FB16
C215 390pf
C216 390pf
FB1
FB2
C201 390pf
C202 390pf
UNUSED GATE ON 6A
10B2
10B1
R114 1K
6D
H2
H3
ALL ON CHIP 11B2

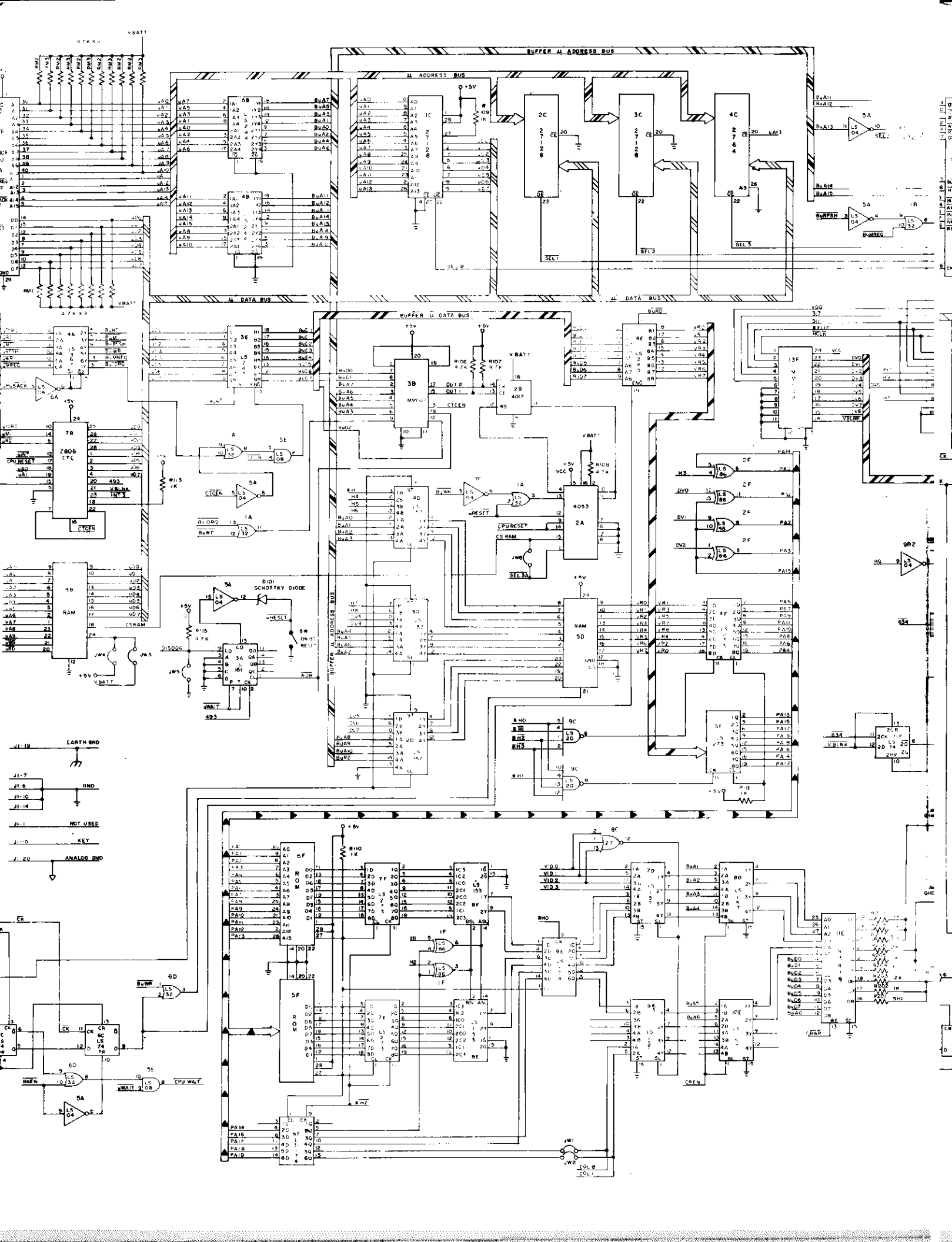
BUFFER µ ADDRESS BUS
µ ADDRESS BUS
µ DATA BUS
BUFFER µ DATA BUS
BUFFER µ ADDRESS BUS
D101 SCHOTTKY DIODE
EARTH GND
GND
NOT USED
KEY
ANALOG GND
CPU WAIT
CPU RESET
CS RAM
CTCEN
VBATT
+5V

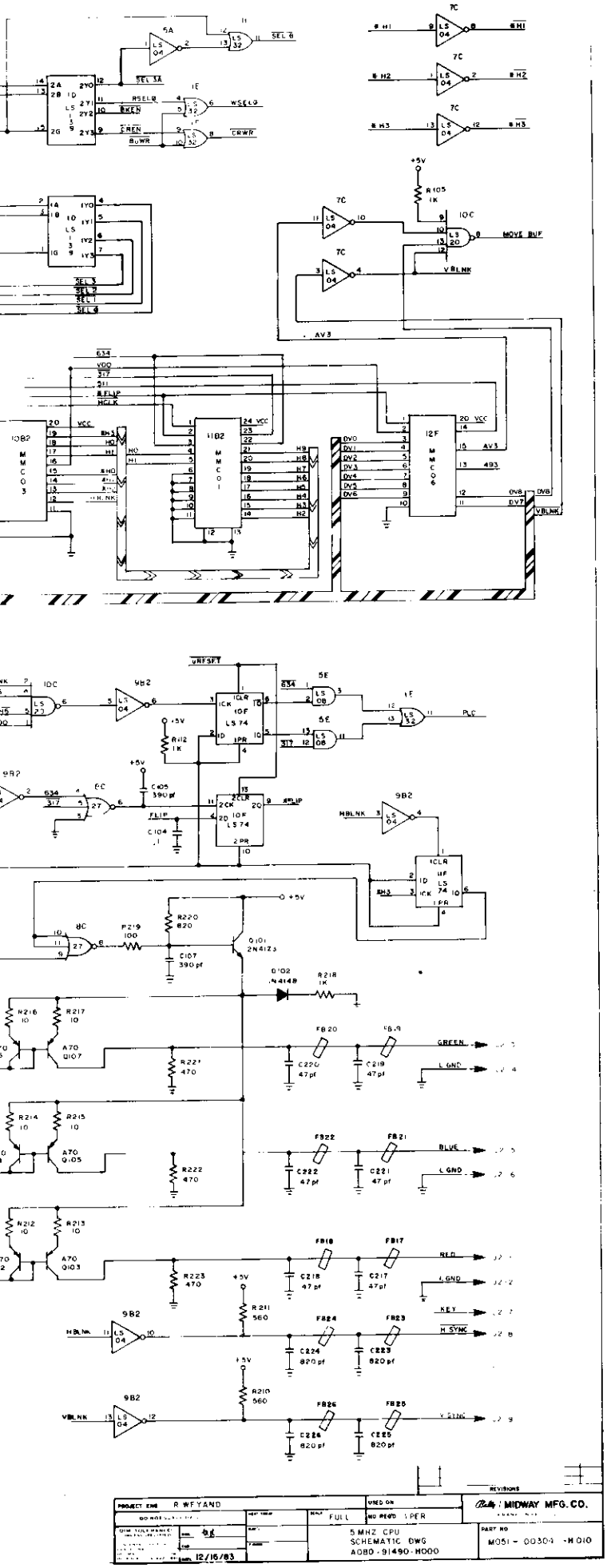

PROJECT ENG R WEYAND
USED ON
NO REQ'D 1 PER
FULL
5 MHZ CPU
SCHEMATIC DWG
A080-91490-H000
MIDWAY MFG. CO.
PART NO
M051-00304-H010
12/16/83
REVISIONS

## DESIGNATION LIST

| DESIGNATION NO. | DESCRIPTION |
|---|---|
| CP1-CP42 | .01 MF AX. CER. |
| CP43-CP65 | 10 MF 25V AX. TANT. |
| CP66-CP69 | 470 MF 16V AX. ELECT. |
| CP70 | .01 MF AX. CER. |
| C101 | 33 PF AX. CER. |
| C102 | 47 PF AX. CER. |
| C103 | .1 UF AX. CER. |
| C104 | .1 UF AX. CER. |
| C105 | 390 PF AX. CER. |
| C107 | 390 PF AX. CER. |
| C201-C216 | 390 PF AX. CER. |
| C217-C222 | 47 PF AX. CER. |
| C223-C226 | 820 PF AX. CER. |
| R101 | 82K OHM 1/4W 5% CRBN. |
| R102 | 39 OHM 1/4W 5% CRBN. |
| R104,R105 | 1K OHM 1/4W 5% CRBN. |
| R106-R108 | 4.7K OHM 1/4W 5% CRBN. |
| R109-R114 | 1K OHM 1/4W 5% CRBN. |
| R115 | 4.7K OHM 1/4W 5% CRBN. |
| R201 | 510 OHM 1/4W 5% CRBN. |
| R202 | 1K OHM 1/4W 5% CRBN. |
| R203 | 2K OHM 1/4W 5% CRBN. |
| R204 | 510 OHM 1/4W 5% CRBN. |
| R205 | 1K OHM 1/4W 5% CRBN. |
| R206 | 2K OHM 1/4W 5% CRBN. |
| R207 | 510 OHM 1/4W 5% CRBN. |
| R208 | 1K OHM 1/4W 5% CRBN. |
| R209 | 2K OHM 1/4W 5% CRBN. |
| R210,R211 | 560 OHM 1/4W 5% CRBN. |
| R212-R217 | 10 OHM 1/4W 5% CRBN. |
| R218 | 1K OHM 1/4W 5% CRBN. |
| R219 | 100 OHM 1/4W 5% CRBN. |
| R220 | 820 OHM 1/4W 5% CRBN. |
| R221-R223 | 470 OHM 1/4W 5% CRBN. |
| R301 | 82 OHM 1/4W 5% CRBN |
| R302,R303 | 68 OHM 1/4W 5% CRBN |
| RM1 | 4.7K OHM 9 PIN SIP |
| RM2,RM3 | 4.7K OHM 8 PIN SIP |
| RM4 | 4.7K OHM 6 PIN SIP |
| D101 | 1N5817 |
| D102 | 1N4148 |
| Q101 | 2N4123 |
| Q102-Q107 | A 70 |
| Q108 | 2N4403 |
| OSC 1 | 20 MHZ + 0.1% OSCILLATOR |
| IC 1A | 74LS32 |
| IC 2A | 4053 |
| IC 3A | 74LS161 |

| DESIGNATION NO. | DESCRIPTION |
|---|---|
| IC 4A | 74LS367 |
| IC 5A | 74LS04 |
| IC 6A | 74S04 |
| IC 1B | 74LS32 |
| IC 2B | 4017 |
| IC 3B | MMC07 |
| IC 4B,IC 5B | 74LS244 |
| IC 6B | NV RAM |
| IC 7B | Z80B CTC |
| IC 8B | Z80B |
| IC 9B1 | 74S161 |
| IC 9B2 | 74LS04 |
| IC 10B1 | 74LS08 |
| IC 10B2 | MMC03 |
| IC 11B1 | 74LS86 |
| IC 11B2 | MMC01 |
| IC 1C,IC 2C, IC 3C,IC 4C | EPROM |
| IC 5C,IC 6C | 74LS74 |
| IC 7C | 74LS04 |
| IC 8C | 7427 |
| IC 9C,IC 10C | 74LS20 |
| IC 1D | 74LS139 |
| IC 2D,IC 3D, IC 4D,IC 7D | 74LS157 |
| IC 8D | |
| IC 5D | RAM |
| IC 6D | 74LS32 |
| IC 1E | 74LS32 |
| IC 3E,IC 4E | 74LS245 |
| IC 5E | 74LS08 |
| IC 6E,IC 9E | 74LS174 |
| IC 7E | 74LS273 |
| IC 8E | 74LS153 |
| IC 10E | 74LS157 |
| IC 11E | 93419 |
| IC 1F,IC 2F | 74LS86 |
| IC 3F,IC 4F, IC 7F | 74LS273 |
| IC 5F,IC 6F | EPROM |
| IC 8F | 74LS153 |
| IC 9F | 74LS157 |
| IC 10F,IC 11F | 74LS74 |
| IC 12F | MMC06 |
| IC 13F | MMC02 |
| FB1-FB28 | FERRITE BEAD |
| ICS 13FA, ICS 11B2A | 8 PIN DIP SOCKET |
| ICS 13FB, ICS 11B2B | 16 PIN DIP SOCKET |
| ICS 3B,ICS 10B2, ICS 12F | 20 PIN DIP SOCKET |
| ICS 6B,5D | 24 PIN DIP SOCKET |
| ICS 7B,ICS 1C-4C, | 28 PIN DIP SOCKET |
| ICS 11E,ICS 5F, ICS 6F | |
| ICS 8B | 40 PIN DIP SOCKET |
| J1 | 20 PIN .156C CONN. OMIT 15 |
| J2 | 9 PIN .100C CONN. OMIT 3 |
| J3-J7 | HEADER |
| - | FLEX PACK JUMPERS |
| JW1-JW6 | JUMPERS |
| SW1 | PUSH BUTTON SW. |
| A080-91490-H000 | 5 MHZ CPU BD. |

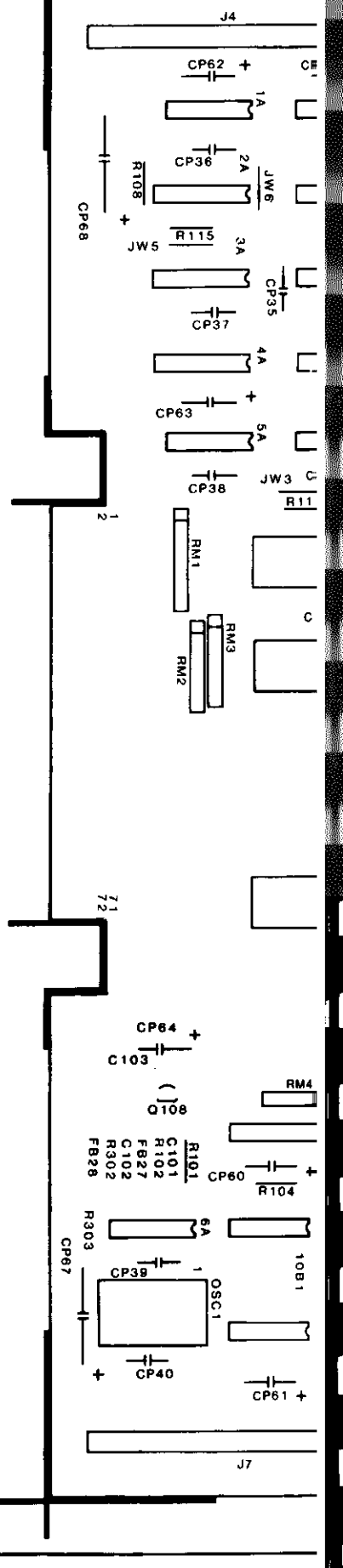

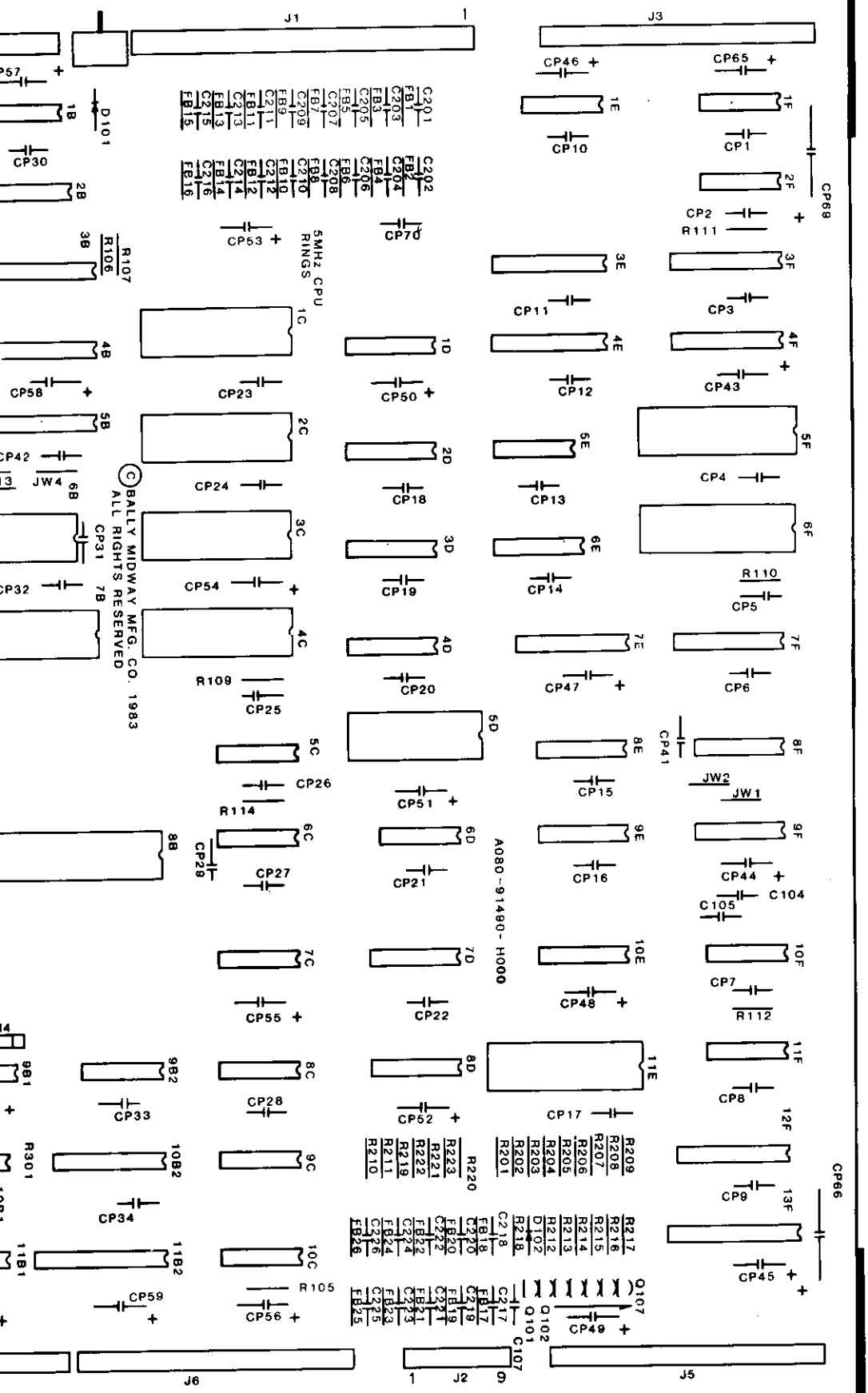


| DESCRIPTION | QTY | DESIG |
|---|---|---|
| 33 PF 50V AX. CER. | 1 | C101 |
| 47 PF 50V AX. CER. | 7 | C102,C |
| 390 PF 50V AX. CER. | 18 | C105, C216 |
| 820 PF 50V AX. CER. | 4 | C223- |
| .01 MF 50V 20% AX. CER. | 43 | CP1-C |
| .1 MF 50V 20% AX. CER. | 2 | C103, |
| 10 MF 25V 10% AX. TANT. | 23 | CP43- |
| 470 MF 16V AX. ELECT. | 4 | CP66- |
| 10 OHM 1/4W 5% CRBN. | 6 | R212- |
| 39 OHM 1/4W 5% CRBN | 1 | R102 |
| 68 OHM 1/4W 5% CRBN | 2 | R302, |
| 82 OHM 1/4W 5% CRBN | 1 | R301 |
| 100 OHM 1/4W 5% CRBN. | 1 | R219 |
| 470 OHM 1/4W 5% CRBN. | 3 | R221- |
| 510 OHM 1/4W 5% CRBN. | 3 | R201, |
| 560 OHM 1/4W 5% CRBN. | 2 | R210, |
| 820 OHM 1/4W 5% CRBN. | 1 | R220 |
| 1K OHM 1/4W 5% CRBN. | 12 | R104, R114, R208, |
| 2K OHM 1/4W 5% CRBN. | 3 | R203, |
| 4.7K OHM 1/4W 5% CRBN. | 4 | R106- |
| 82K OHM 1/4W 5% CRBN. | 1 | R101 |
| 4.7K OHM 9 PIN SIP. | 1 | RM1 |
| 4.7K OHM 8 PIN SIP. | 2 | RM2, |
| 4.7K OHM 6 PIN SIP. | 1 | RM4 |
| 1N5817 | 1 | D101 |
| 1N4148 | 1 | D102 |
| 2N4123 | 1 | Q101 |
| A 70 | 6 | Q102- |
| 2N4403 | 1 | Q108 |
| 20 MHZ + 0.1% OSCILLATOR | 1 | OSC1 |
| 4017 | 1 | IC 2E |
| 4053 | 1 | IC 2 |
| 74LS04 | 3 | IC 9E |
| 74LS08 | 2 | IC 1C |
| 74LS20 | 2 | IC 9 |
| 7427 | 1 | IC 8C |

## CROSS REFERENCE LIST

| IGNATION NO. | PART NOS. | DESCRIPTION | QTY |
|---|---|---|---|
| 1 | 0986-00800-0300 | 74LS32 | 4 |
| | | 74LS74 | 4 |
| 2,C217-C222 | 0986-00800-2800 | 74LS86 | 3 |
| | | 74LS139 | 1 |
| 5,C107,C201- | 0986-00800-3000 | 74LS153 | 2 |
| 6 | | 74LS157 | 7 |
| 3-C226 | 0945-00816-0400 | | |
| | | 74LS161 | 1 |
| | | 74LS174 | 2 |
| -CP42,CP70 | 0986-00800-2200 | 74LS244 | 2 |
| | | 74LS245 | 2 |
| 3,C104 | 0986-00800-0200 | 74LS273 | 4 |
| | | 74LS367 | 1 |
| 3-CP65 | 0986-00800-3400 | 74S04 | 1 |
| | | 74S161 | 1 |
| 6-CP69 | 0986-00800-3300 | 93419 | 1 |
| | | EPROM | 6 |
| -R217 | 100E-00005-0011 | | |
| | | MMC01 | 1 |
| | 100E-00005-0023 | MMC02 | 1 |
| 2,R303 | 100E-00005-0029 | MMC03 | 1 |
| | 100E-00005-0031 | MMC07 | 1 |
| | 100E-00005-0033 | NV RAM | 1 |
| | | RAM | 1 |
| -R223 | 100E-00005-0051 | Z80B | 1 |
| | | Z80B CTC | 1 |
| ,R204,R207 | 100E-00005-0053 | MMC06 | 1 |
| | | FERRITE BEAD | 28 |
| ,R211 | 100E-00005-0054 | 8 PIN DIP SOCKET | 2 |
| | 100E-00005-0058 | 16 PIN DIP SOCKET | 2 |
| ,R105,R109- | 100E-00005-0061 | 20 PIN DIP SOCKET | 3 |
| ,R202,R205, | | | |
| ,R218 | | 24 PIN DIP SOCKET | 2 |
| ,R206,R209 | 100E-00005-0068 | 28 PIN DIP SOCKET | 8 |
| -R108,R115 | 100E-00005-0079 | | |
| | | 40 PIN DIP SOCKET | 1 |
| | 100E-00005-0112 | | |
| | | FMD. HDR. .100C | 1 |
| | | OMIT 3 | |
| | 102E-00004-0024 | FMD. HDR. .156C | 1 |
| | | OMIT 15 | |
| RM3 | 102E-00004-0025 | HEADER | 5 |
| | 102E-00004-0027 | FLEX PACK JUMPERS | 5 |
| | | JUMPERS | 6 |
| | 103E-00003-0009 | PUSH BUTTON SW. | 1 |
| | 103E-00002-0005 | | |
| | 104E-00001-0007 | | |
| -Q107 | 104E-00002-0012 | 5 MHZ CPU BD. | 1 |
| | 104E-00002-0006 | | |
| | 0304-00804-0007 | | |
| 9 | 0986-00803-8700 | | |
| 4 | 0986-00803-2000 | | |
| 32,7C,5A | 0986-00803-1007 | | |
| B1,5E | 0986-00803-1006 | | |
| ,10C | 0986-00803-1004 | | |
| | 0304-00803-0046 | | |

| DESIGNATION NO. | PART NOS. |
|---|---|
| IC 1A,1B,6D,1E | 0986-00803-0600 |
| IC 5C,6C,1DF,11F | 0986-00803-1005 |
| IC 11B1, 1F, 2F | 0986-00803-9900 |
| IC 1D | 0304-00803-0042 |
| IC 8E,8F | 0986-00803-1000 |
| IC 2D,3D,4D,7D,8D 10E,9F | 0986-00803-9700 |
| IC 3A | 0986-00803-1003 |
| IC 6E,9E | 0986-00803-9800 |
| IC 4B,5B | 0986-00803-0800 |
| IC 3E,4E | 0986-00803-0900 |
| IC 7E,3F,4F,7F | 0986-00803-1001 |
| IC 4A | 0986-00803-2200 |
| IC 6A | 0986-00803-0400 |
| IC 9B1 | 0304-00803-0038 |
| IC 11E | 0986-00803-9600 |
| IC 1C,2C,3C,4C, 5F,6F | SEE NOTE |
| IC 11B2 | 0986-00803-8900 |
| IC 13F | 0986-00803-9000 |
| IC 10B2 | 0986-00803-9100 |
| IC 3B | 0986-00804-3200 |
| IC 6B | 0986-00803-8100 |
| IC 5D | 0986-00803-1008 |
| IC 8B | 0304-00803-0041 |
| IC 7B | 0304-00803-0040 |
| IC 12F | 0304-00803-9200 |
| FB1-FB28 | 0316-00804-0002 |
| ICS 13FA, ICS 11B2A | 0986-00804-3600 |
| ICS 13FB, ICS 11B2B | 0986-00804-3700 |
| ICS 3B,ICS 10B2, ICS 12F | 0986-00804-3800 |
| ICS 6B,ICS 5D | 0986-00804-3400 |
| ICS 7B,ICS 1C-4C, ICS 11E,ICS 5F, ICS 6F | 0986-00804-3900 |
| ICS 8B | 0986-00804-3500 |
| J2 | 3000-16366-0902 |
| J1 | 3000-16387-2010 |
| J3-J7 | 0986-00804-4700 |
| - | 0986-00804-4800 |
| JW1-JW6 | 0986-00804-4000 |
| SW1 | 0986-00804-3100 |
| | A080-91490-H000 |

**NOTE : ROM PARTS NUMBERS AT BACK OF CATALOG.**

| REVISIONS | | |
|---|---|---|
| | | |
| | | |
| | | |
| | | |

| | | | | |
|---|---|---|---|---|
| PROJECT ENG: R. PLOUSSARD | | | USED ON | Bally / MIDWAY MFG. CO. FRANKLIN PK ILL. |
| DO NOT SCALE DWG | HEAT TREAT | SCALE FULL | NO. REQ'D 1 PER | |
| DIM TOLERANCES UNLESS SPECIFIED CONCENTRICITY T.I.R. .002 FRACTIONAL ± 1/64 DECIMAL ± .005 HOLE DIA + .002 -.000 | DRN. RCW<br>CKD.<br>DATE 12/19/83 | MAT'L.<br>FINISH | ASSEMBLY DRAWING<br>5 MHZ CPU<br>A082-91490-H000 | PART NO. M051 - 00304 - H009 |

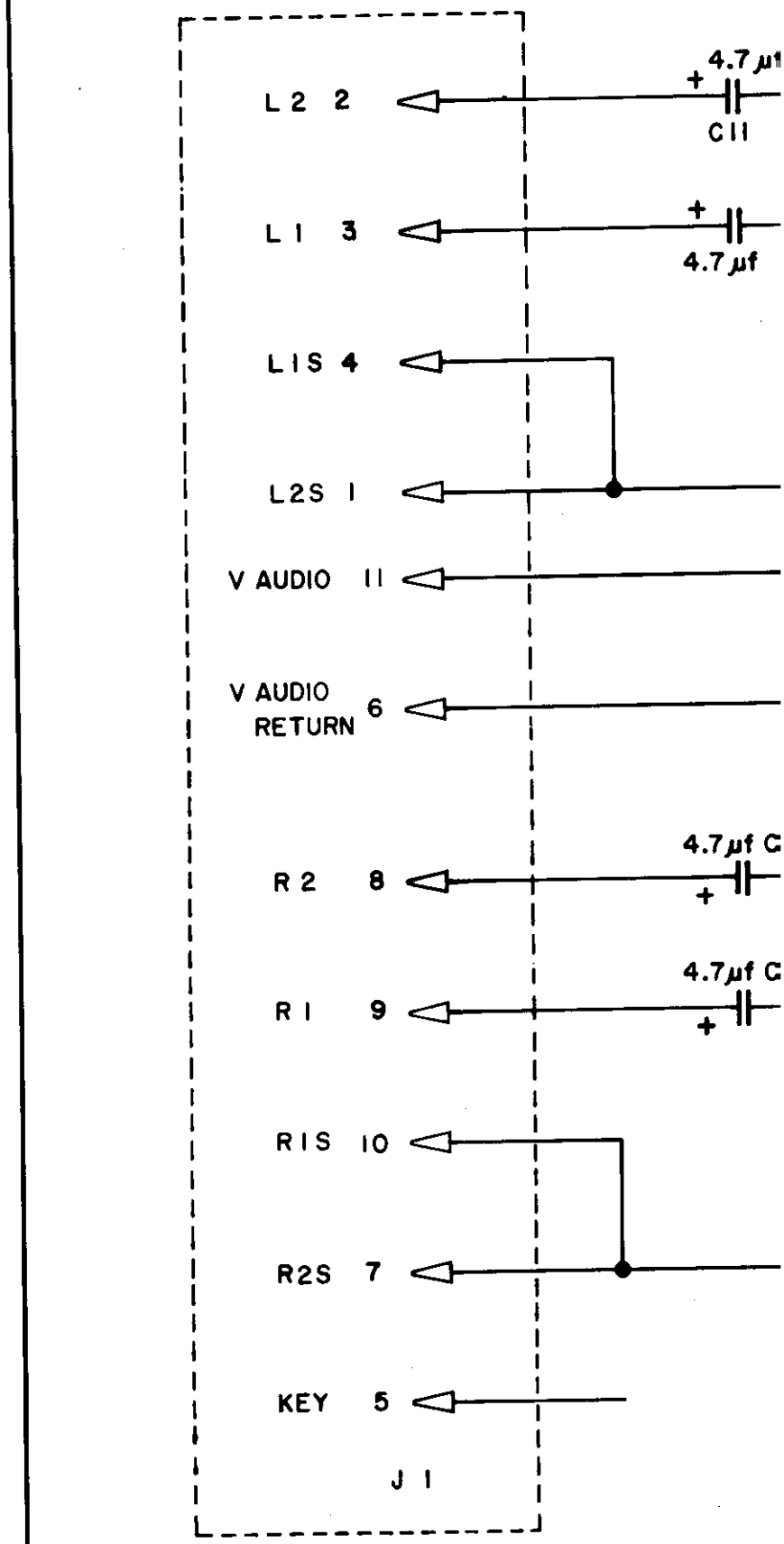
L 2 2
4.7 µf
C11
L 1 3
4.7 µf
L1S 4
L2S 1
V AUDIO 11
V AUDIO RETURN 6
R 2 8
4.7µf C
R 1 9
4.7µf C
R1S 10
R2S 7
KEY 5
J 1

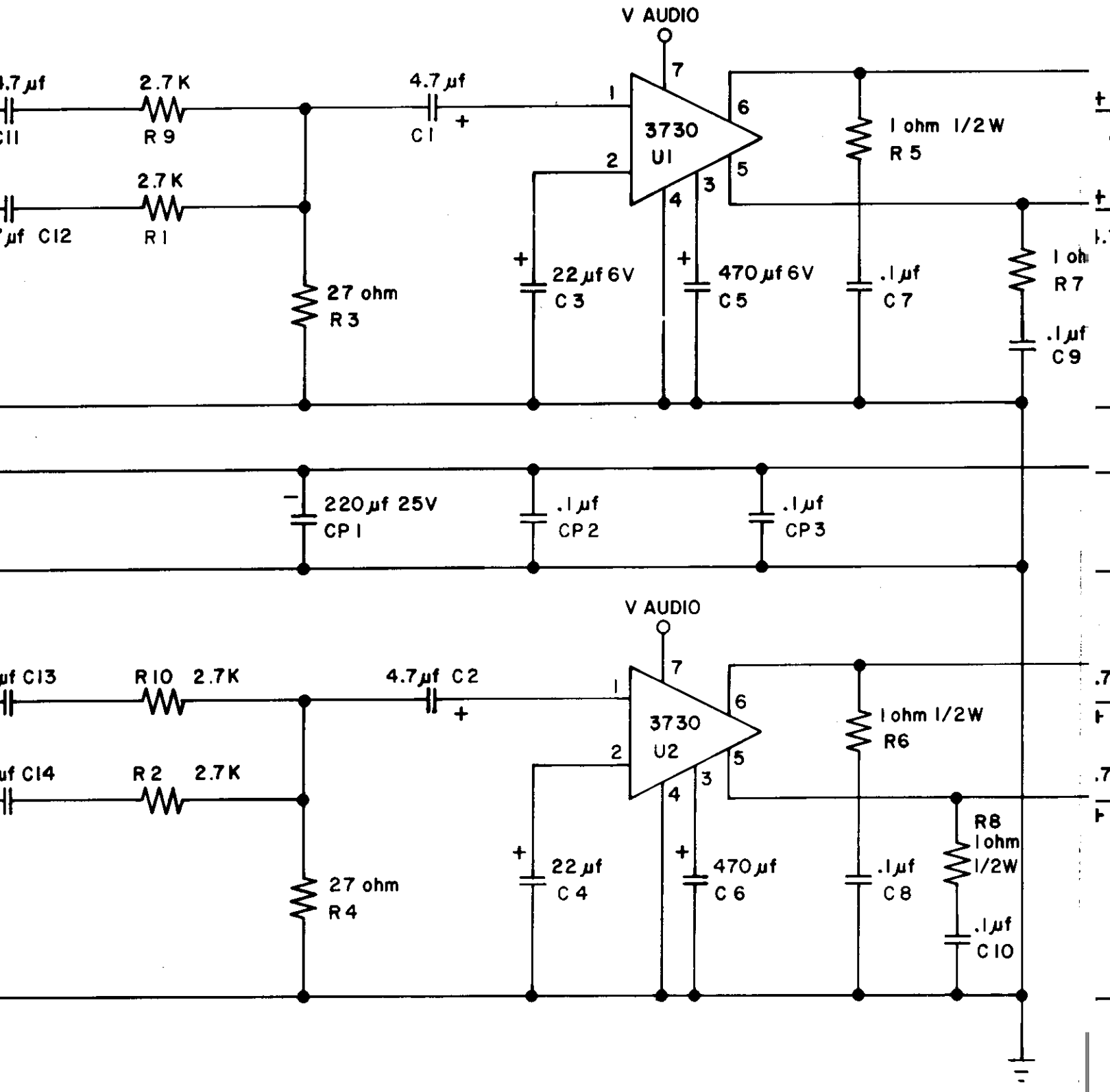


| | | | |
|---|---|---|---|
| PROJECT ENG: CARY MEDNICK | | | USED ON MCR |
| DO NOT SCALE DWG | HEAT TREAT | SCALE | NO. REQ'D 1 P |
| DIM TOLERANCES UNLESS SPECIFIED<br>CONCENTRICITY T.I.R.<br>FRACTIONAL ± 1/64<br>DECIMAL .005<br>HOLE DIA + .002 .000 | DRN. FLL<br>CKD.<br>DATE 6/30/83 | MAT'L.<br>FINISH | SCHEMATIC DRAWING<br>DUAL PWR AMP W/MXR M<br>A084-91648-A000 |

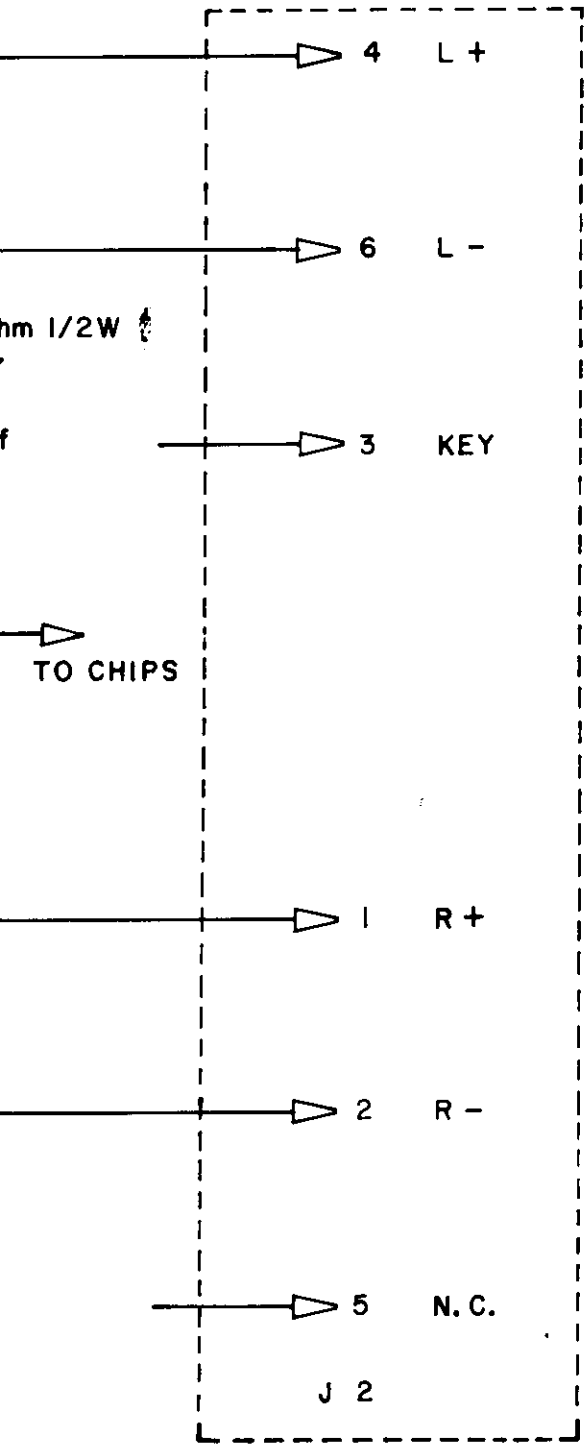


| | | |
|---|---|---|
| | | |
| | | |
| | | |
| | | |

REVISIONS

R/III

PER

Bally / MIDWAY MFG. CO.
FRANKLIN PK ILL

MCR III

PART NO.
M051 - 00304 - A013

## DESIGNATION LIST

| DESIGNATION NO. | DESCRIPTION |
|---|---|
| C1,C2 | 4.7 MF 25V RD TANT. |
| C3,C4 | 22 MF 6V RD TANT. |
| C5,C6 | 470 MF 6V AX ELECT. |
| C7-C10 | .1 MF 50V AX CR. |
| C11-C14 | 4.7 MF 25V RD TANT |
| CP1 | 220 MF 25V AX ELECT. |
| CP2,CP3 | .1 MF 50V AX CR. |
| R1,R2 | 2.7K OHM 1/4W 5% CRBN. |
| R3,R4 | 27 OHM 1/4W 5% CRBN. |
| R5-R8 | 1 OHM 1/2W 5% CRBN. |
| R9,R10 | 2.7K OHM 1/4W 5% |
| U1,U2 | MB3730 |
| J1 | .045 SQ. PIN |
| J2 | .045 SQ. PIN |
| HSU1,U2 | HEATSINK ASSY |
| MH1-MH4 | 1/4" SPACER FOR #8 SCREW |
| DUAL PWR AMP W/MXR | A080-91648-A000 |

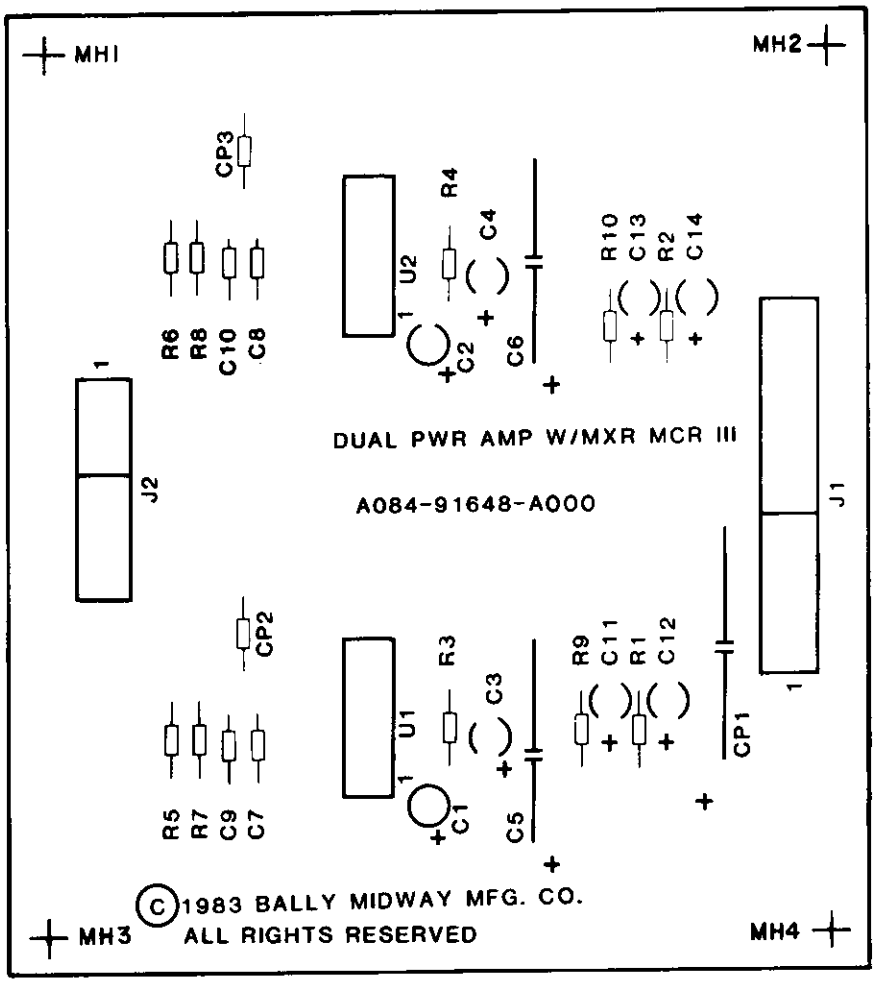


CROSS REFER

| DESCRIPTION | QTY | DE |
|---|---|---|
| .1 MF 50V AX CR. | 6 | C7 |
| 4.7 MF 25V RD TANT. | 6 | C1 |
| 22 MF 6V RD TANT | 2 | C3 |
| 220 MF 25V AX ELECT. | 1 | CP |
| 470 MF 6V AX ELECT. | 2 | C5 |
| 1 OHM 1/2W 5% | 4 | R5 |
| 27 OHM 1/4W 5% | 2 | R3 |
| 2.7K 1/4W 5% | 4 | R1 |
| MB3730 | 2 | U1 |
| .045 SQ. PIN | 5 | J2 |
| .045 SQ. PIN | 10 | J1 |
| HEATSINK ASSY | 2 | HS |
| 1/4" SPACER FOR #8 SCREW | 4 | MH |
| DUAL PWR AMP W/MXR | 1 | |

| | | | | |
|---|---|---|---|---|
| PROJECT ENG: C. MEDNICK | | | | USED ON MCR II |
| DO NOT SCALE DWG. | | HEAT TREAT | SCALE FULL | NO. REQ'D 1 PER |
| DIM. TOLERANCES UNLESS SPECIFIED | DRN. RLW | MAT'L. | ASSEMBLY DWG. DUAL POWER AMP W/ MIXE | |
| | CKD. | FINISH | A080-91648-A000 | |
| | DATE 07/05/83 | | | |

ERENCE LIST

| ESIGNATION NO. | PART NOS. |
|---|---|
| 7-C10,CP2,CP3 | 0986-00800-1100 |
| 1,C2,C11-C14 | 0986-00800-3100 |
| 3,C4 | 0986-00800-1600 |
| P1 | 0986-00800-3200 |
| 5,C6 | 0986-00800-1700 |
| 6-R8 | 0062-0260 3-1XXX |
| 3,R4 | 0062-068B3-1XXX |
| 1,R2,R9,R10 | 0062-199B3-1XXX |
| 1,U2 | 0066-188XX-XX4X |
| 2 | 0017-00033-0480 |
| 1 | 0017-00033-0480 |
| SU1,HSU2 | A986-00010-0000 |
| H1-MH4 | 0017-00042-0320 |
| | A080-91648-A000 |

REVISIONS

I

Bally / MIDWAY MFG. CO.
FRANKLIN PK ILL.

R MCRIII

PART NO.
M051 - 00304 - A012

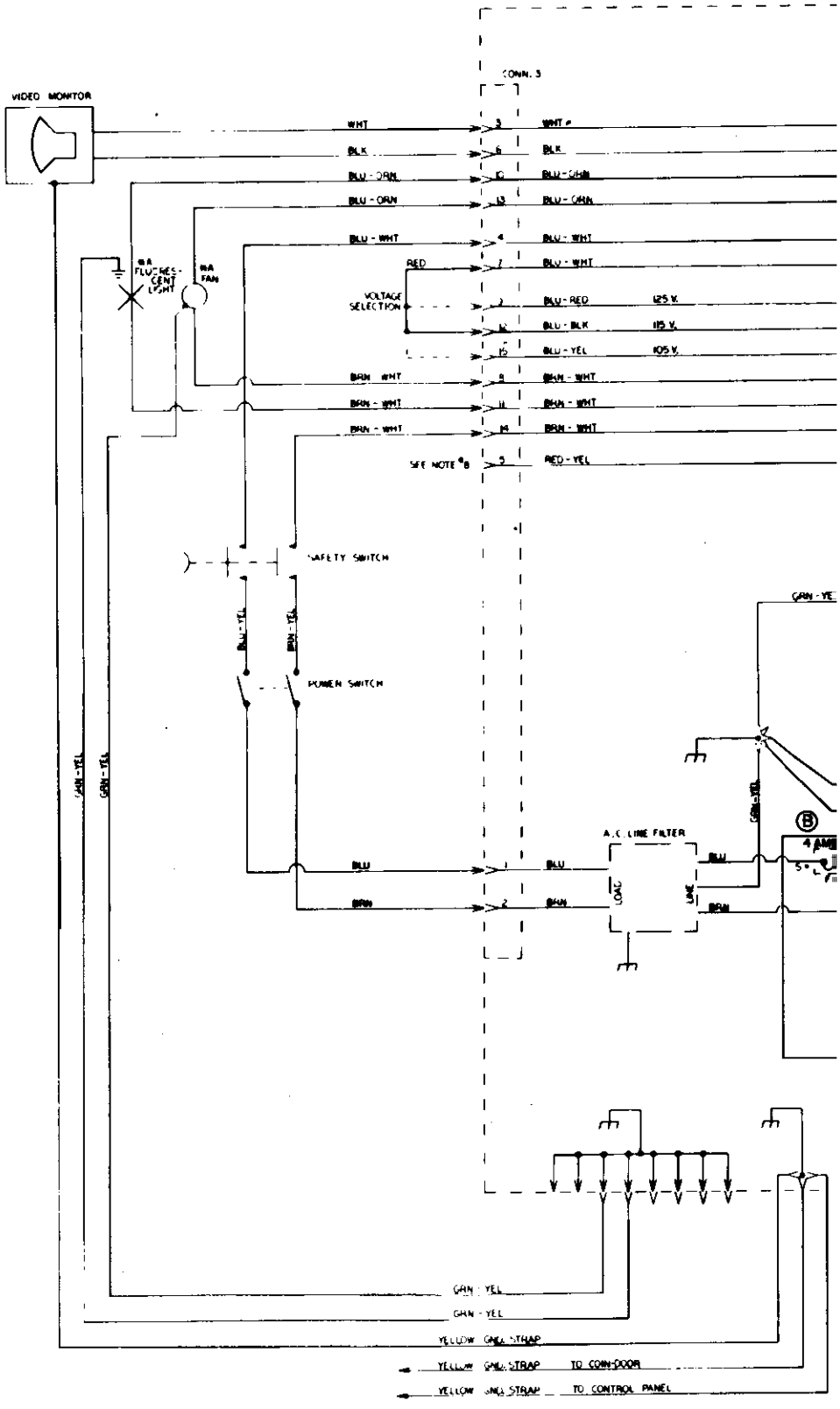
VIDEO MONITOR
CONN. 3
WHT
BLK
BLU - ORN
BLU - ORN
BLU - WHT
RED
VOLTAGE SELECTION
BLU - RED 125 V.
BLU - BLK 115 V.
BLU - YEL 105 V.
BRN - WHT
BRN - WHT
BRN - WHT
SEE NOTE *8
RED - YEL
8A FLUORESCENT LIGHT
8A FAN
SAFETY SWITCH
BLU - YEL
BRN - YEL
POWER SWITCH
GRN - YEL
A.C. LINE FILTER
BLU
BRN
LOAD
LINE
GRN - YEL
GRN - YEL
YELLOW GND. STRAP
YELLOW GND. STRAP TO COIN-DOOR
YELLOW GND. STRAP TO CONTROL PANEL

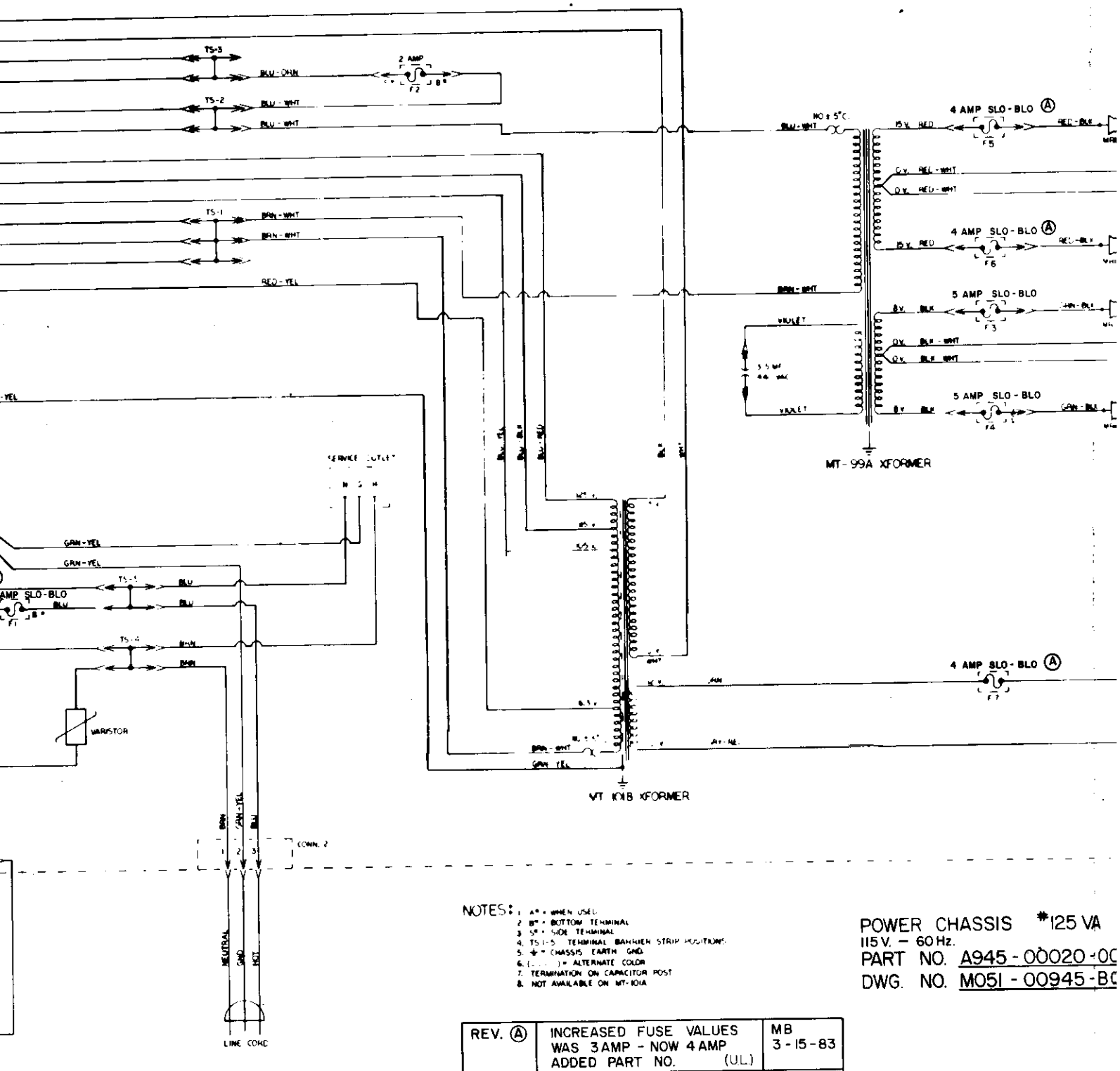


NOTES:
1. A* = WHEN USED.
2. B* = BOTTOM TERMINAL
3. S* = SIDE TERMINAL
4. TS1-5 TERMINAL BARRIER STRIP POSITIONS
5. ⏚ = CHASSIS EARTH GND.
6. ( ) = ALTERNATE COLOR
7. TERMINATION ON CAPACITOR POST
8. NOT AVAILABLE ON MT-10IA

POWER CHASSIS *125 VA
115 V. – 60 Hz.
PART NO. A945-00020-0C
DWG. NO. M051-00945-BC

| | | |
|---|---|---|
| REV. Ⓐ | INCREASED FUSE VALUES WAS 3AMP - NOW 4AMP ADDED PART NO. (UL) | MB 3-15-83 |
| REV. Ⓑ | INCREASED FUSE VALUE WAS 3AMP – NOW 4AMP | MB 3-24-83 |

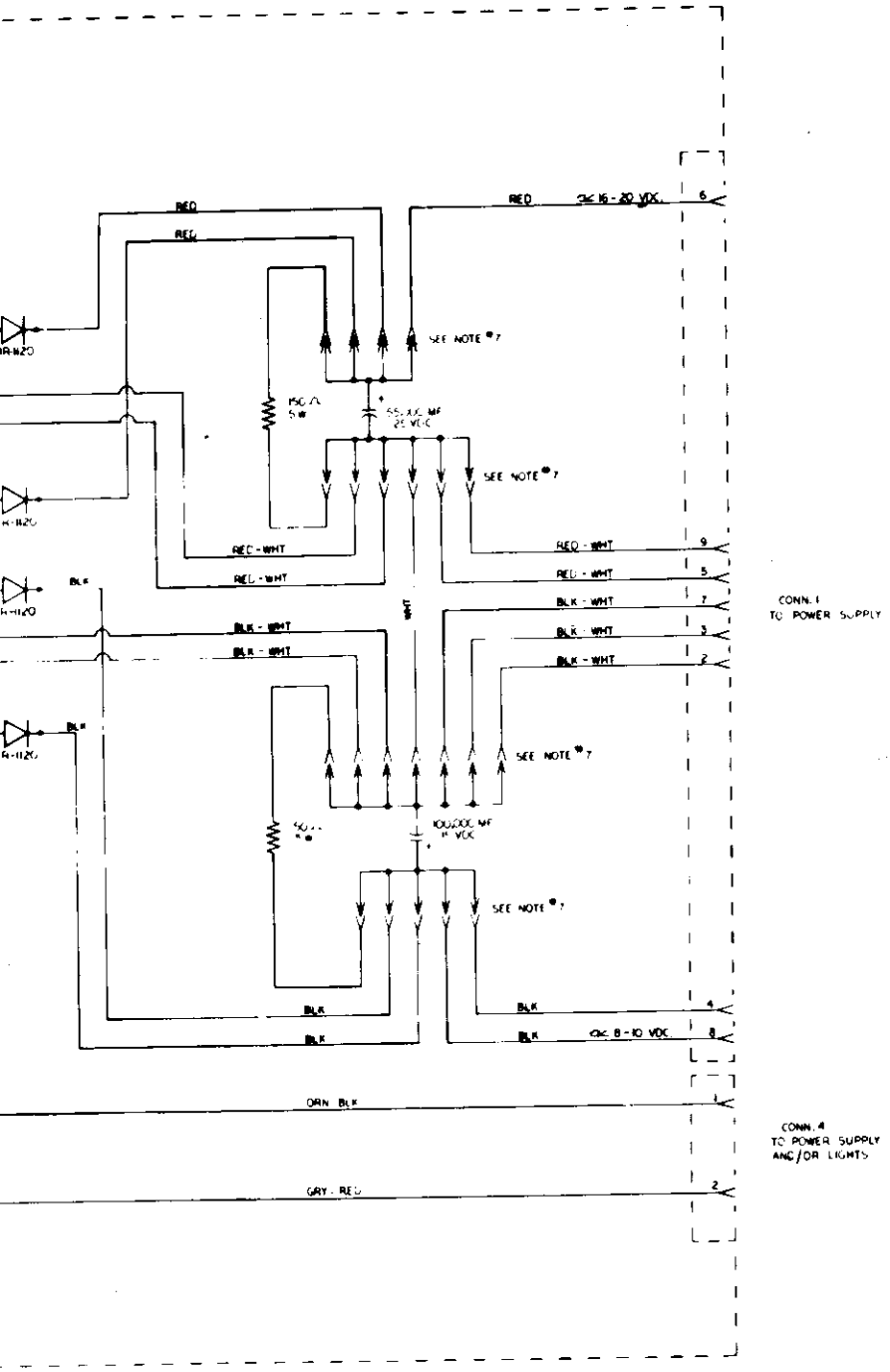


BALLY / MIDWAY
10601 W. BELMONT AVE.
FRANKLIN PARK, IL. 60131

000
037

# DESIGNATION LIST

| DESIGNATION # | DESCRIPTION |
|---|---|
| C101 | 4700uf Ax. ELECT. |
| C102 | 470uf AX. ELECT. |
| C103 | .1uf AX. CER. |
| C104 | .1uf AX. CER. |
| C105 | 47pf AX. CER. |
| C106 | 470uf AX. ELECT. |
| C107 | 100uf RD. TANT. |
| C108 | 1uf RD. TANT. |
| C109 | 4.7uf RD. TANT. |
| C110 | .1uf AX. CER. |
| C111 | .1uf AX. CER. |
| C201 | .01uf MYLAR |
| C202 | .033uf MYLAR |
| C203 | .01uf MYLAR |
| C204 | .047uf MYLAR |
| C205 | 820pf AX. CER. |
| C206 C208 | .01uf AX. CER. |
| C207 | 0.082uf MYLAR |

| DESIGNATION # | DESCRIPTION |
|---|---|
| D101 | A15F |
| D102 | A15F |
| D103 | A15F |
| D104 | A15F |
| D105 | A15F |
| D106 | 1N4001 |
| D201 | 1N4148 |
| D202 | 1N4148 |
| D203 | 1N4148 |
| D204 | 1N4001 |
| D205 | 1N4001 |
| Q102 | 2N2905 |
| Q105 | 2N2905 |
| Q201 | 2N4401 |

| | |
|---|---|
| CP1 | .1uf AX. CER. |
| R101 | .18ohm 5W W/RES. SPACER |
| R102 | 68ohm 1/2W 5% |
| R104 | 10ohm 5W W/RES. SPACER |
| R105 | 27ohm 1/4W 5% |
| R106 | 270ohm 1/4W 5% |
| R107 | 6.2K 1/4W 5% |
| R109 | 1K 1/4W 5% |
| R110 | .16ohm 15W W/RES. SPACER |
| R111 | 6.8ohm 1/2W5% |
| R112 | 68ohm 1/2W 5% |
| R113 | 1.2K 1/4W 5% |
| R114 | 47ohm 1/4W 5% |
| R115 | 160ohm 1/4W 5% |
| R117 | 560ohm 1/4W 5% |
| R118 | 150ohm 2W |
| R201 | 270ohm 1/4W 5% |
| R202 | 1.2K 1/4W 5% |
| R203 | 1.1M 1/4W 5% |
| R204 | 3.3M 1/4W 5% |
| R205 | 10M 1/4W 5% |
| R206 | 100K 1/4W 5% |
| R207 | 33K 1/4W 5% |
| R208 | 2M 1/4W 5% |
| R209 | 1M 1/4W 5% |
| R210 | 1.2M 1/4W 5% |
| R211 | 75K 1/4W 5% |
| R212 | 75K 1/4W 5% |
| R213 | 220K 1/4W 5% |
| R214 | 3.9K 1/4W 5% |
| R215 | 1.2K 1/4W 5% |
| R216 | 82ohm 1W 10% |
| R217 | 270ohm 1/4W 5% |
| R218 | 10K 1/4W 5% |
| R219 | 68ohm 1/2W5% |
| VR101,102 | 100ohm POT |

| | |
|---|---|
| U1 | LM305 REG. |
| U2 | LM305 REG. |
| U3 | LM3900 |
| U4 | 4N28 |
| U6 | 555 |
| L101 | .22uH INDUCTOR |
| B101 | BATTERY 3.6VDC 60DEG C |
| F1 | 3.8A S BLO FUSE |
| FC1A,1B | FUSE CLIP |
| FE1,2 | FERRITE BEAD |
| TW1 | TIE WRAP |
| J3 | 9PIN P.C. MOUNT CONN.(MALE) |
| J4 | 15PIN P.C. MOUNT CONN.(FEMALE) |
| J5 | 15PIN P.C. MOUNT CONN.(MALE) |
| J6 | 3PIN P.C. MOUNT CONN.(MALE) |
| LB1 | FUSE TAG |
| LB2 | SYSTEM TAG |
| HSA1 | HEAT SINK ASS'Y 1 |
| MHHSA1 | MOUNTING HARD WARE(HEAT SINK)<br>2 SCREW<br>4 WASHER<br>2 HEXNUT |
| JW1-5 | JUMPER WIRE |
| FBMH1,2 | FERRITE BEAD MOUNTING HARDWARE |

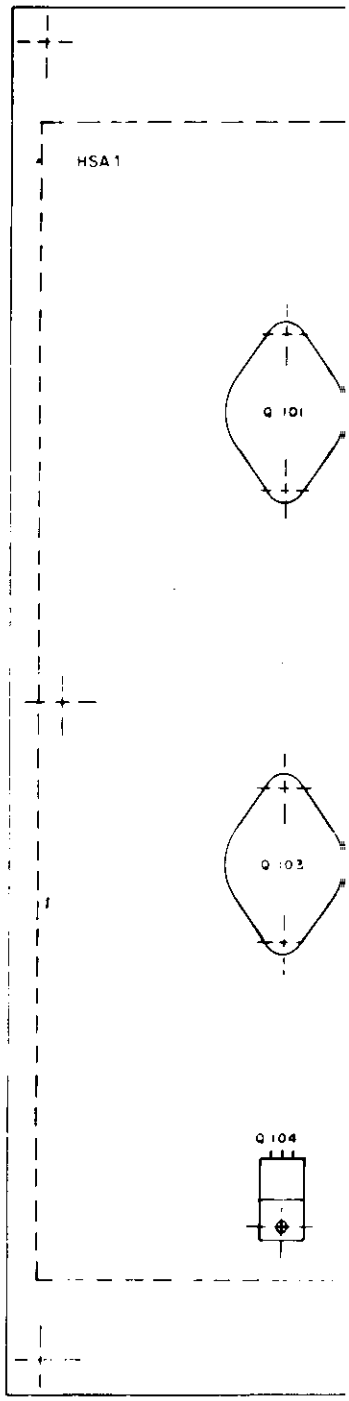

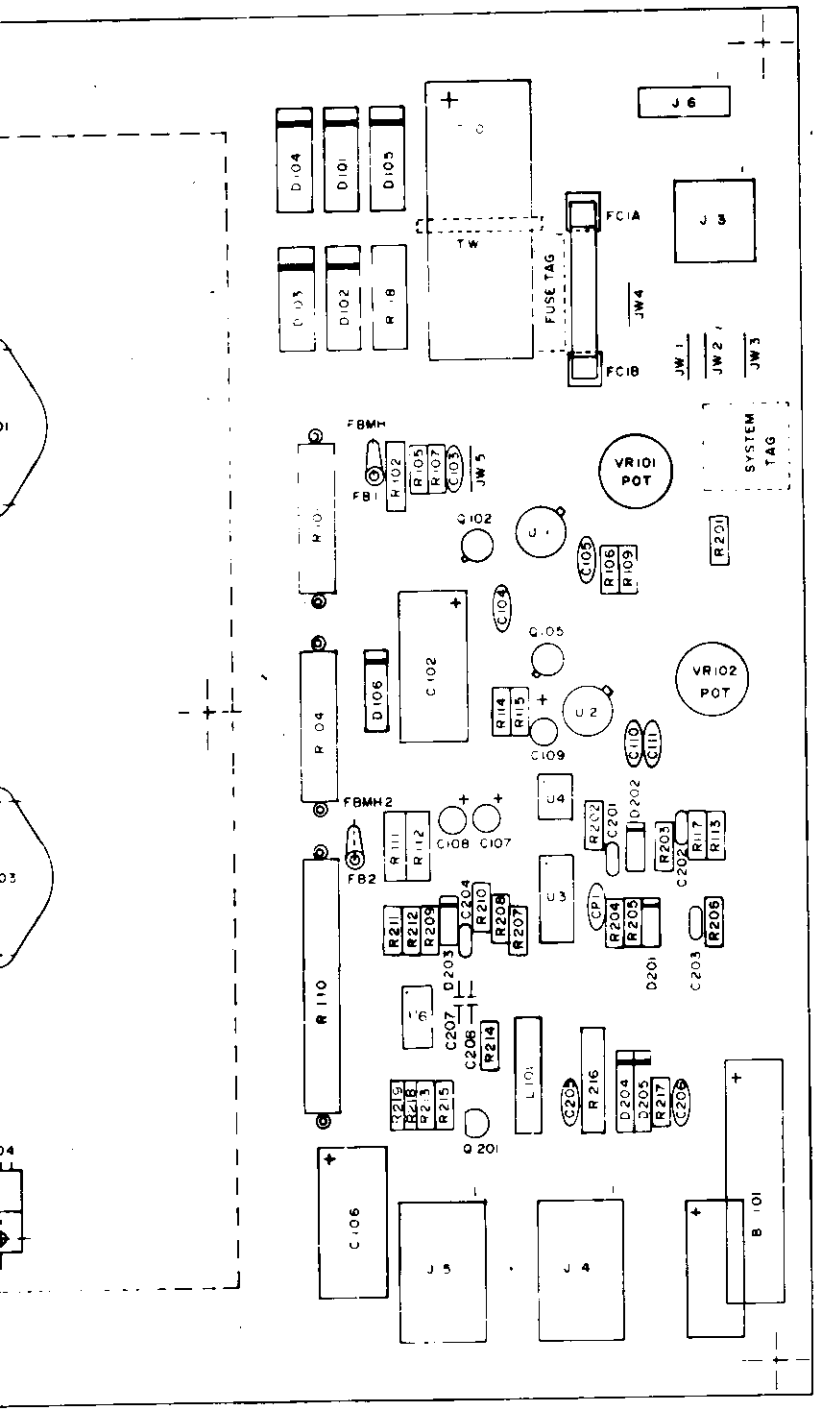


| DESCRIPTION | Q'ty | DESIGNATION * |
|---|---|---|
| 47pf AX. CER. | 1 | C105 |
| 820pf AX. CER. | 1 | C205 |
| .01uf AX. CER | 2 | C206,208 |
| .01uf MYLAR | 2 | C201,203 |
| .033uf MYLAR | 1 | C202 |
| .047uf MYLAR | 1 | C204 |
| 0.082uf AX.CER | 1 | C207 |
| .1uf AX. CER. | 5 | C103,104,110,111, CP1 |
| 1uf RAD. TANT | 1 | C108 |
| 4.7uf RAD. TANT | 1 | C109 |
| 100uf RAD. TANT | 1 | C107 |
| 470uf AX. ELECT | 2 | C102,106 |
| 4700uf AX. ELECT. | 1 | C101 |
| .16ohm 15W 5% | 1 | R110 |
| .18ohm 5W 5% | 1 | R101 |
| 6.8ohm 1/2W 5% | 1 | R111 |
| 10ohm 5W 5% | 1 | R104 |
| 27ohm 1/4W 5% | 1 | R105 |
| 47ohm 1/4W 5% | 1 | R114 |
| 68ohm 1/2W 5% | 3 | R102,112,219 |
| 82ohm 1W 10% | 1 | R216 |
| 150ohm 2W 5% | 1 | R118 |
| 160ohm 1/4W 5% | 1 | R115 |
| 270ohm 1/4W 5% | 3 | R106,201,217 |
| 560ohm 1/4W 5% | 1 | R117 |
| 1K 1/4W 5% | 1 | R109 |
| 1.2K 1/4W 5% | 3 | R113,202,215 |
| 3.9K 1/4W 5% | 1 | R214 |
| 6.2K 1/4W 5% | 1 | R107 |
| 33K 1/4W 5% | 1 | R207 |
| 75K 1/4W 5% | 2 | R211,212 |
| 100K 1/4W 5% | 1 | R206 |
| 110K 1/4W 5% | 1 | R218 |
| 220K 1/4W 5% | 1 | R213 |
| 1M 1/4W 5% | 1 | R209 |
| 1.1M 1/4W 5% | 1 | R203 |
| 1.2M 1/4W 5% | 1 | R210 |
| 2M 1/4W 5% | 1 | R208 |
| 3.3M 1/4W 5% | 1 | R204 |
| 10M 1/4W 5% | 1 | R205 |
| 100ohm POT | 2 | VR101,102 |

## CROSS REFFERENCE LIST

| PART # | DESCRIPTION | Q'ty | DESIGNATION # | PART # |
|---|---|---|---|---|
| 0945-00811-0100 | LM305 REG. | 2 | U1,2 | 0945-00813-0100 |
| 0945-00816-0400 | 555 | 1 | U6 | 0929-00810-4500 |
| 0945-00816-0100 | LM3900 | 1 | U3 | 0945-00813-0200 |
| 0945-00816-0200 | 4N28 | 1 | U4 | 0945-00813-0300 |
| 0945-00816-0500 | | | | |
| 0945-00816-0300 | | | | |
| 0945-00816-1900 | A15F RECTIFIER | 5 | D101-105 | 0945-00804-0200 |
| 0945-00811-0200 | | | | |
| 0945-00811-0300 | 1N4001 | 3 | D106,204,205 | 0945-00804-0300 |
| 0945-00811-0400 | 1N4148 | 3 | D201-203 | 0945-00804-0500 |
| 0945-00811-0500 | | | | |
| 0945-00816-0600 | 2N2905 | 2 | Q102,105 | 0945-00808-0300 |
| 0945-00811-0700 | 2N4401 | 1 | Q201 | 0945-00804-0400 |
| | BATTERY 3.6VDC 60DEG-C | 1 | B101 | 0017-00003-0377 |
| 0945-00815-0100 | FUSE 3/8A S-BLO | 1 | F1 | 0945-00808-0400 |
| 0945-00815-0200 | FUSE CLIP | 2 | FC1A,1B | 0017-00003-0214 |
| 0062-047D3-1XXX | TIE WRAP | 1 | TW1 | 0945-00814-0300 |
| 0945-00812-0100 | | | | |
| 0062-068B3-1XXX | FERRITE BEAD | 2 | FB1,2 | 0017-00009-0225 |
| 0062-086B3-1XXX | FERRITE MOUNTING HDW. | 2 | FBMH1,2 | 0017-00033-0139 |
| 0062-098D3-1XXX | | | | |
| 0062-104F5 1XXX | | | | |
| 0945-00812-0200 | .22uH INDUCTOR | 1 | L101 | 0945-00814-0200 |
| 0062-124B3-1XXX | FUSE TAG | 1 | | M051-00945-A004 |
| 0062-138B3-1XXX | SYSTEM TAG | 1 | | M051-00945-A009 |
| 0062-162B3-1XXX | P.C.B. | 1 | | A080-90412-D000 |
| 0062-179B3-1XXX | | | | |
| 0062-183B3-1XXX | | | | |
| 0062-207B3-1XXX | | | | |
| 0062-217B3-1XXX | | | | |
| 0062-251B3-1XXX | HEAT SINK ASS'Y | 1 | HSA1 | A945-00008-0000 |
| 0062 269B3 1XXX | ( SEE HS ASS'Y DRAWING "** NOTE") | | | |
| 0062-275B3-1XXX | ** 4-40 X 10 SLT RND | 2 | MH HSA 1A, 2A. | 0017-00101-00727 |
| 0062-277B3-1XXX | ** 4-40 HEX NUT | 2 | MH HSA 1E, 2E. | 0017-00103-0002 |
| 0062-291B3 1XXX | ** WSH 4-120-.250-018 | 4 | MH HSA 1B,1D | 0017-00104-0071 |
| 0062-323B3-1XXX | | | MH HSA 2B, 2D | |
| 0062-325B3 1XXX | | | | |
| 0062-327B3-1XXX | 3PIN P.C. MOUNT CONN. (MALE) | 1 | J6 | 0017-00021-0443 |
| 0062-337B3-1XXX | 9PIN P.C. MOUNT CONN (MALE) | 1 | J3 | 0017-00021-0425 |
| 0062-347B3-1XXX | 15PIN P.C. MOUNT CONN.(FEMALE) | 1 | J4 | 0017-00021-0441 |
| 0062-371B3-1XXX | 15PIN P.C. MOUNT CONN.(MALE) | 1 | J5 | 0017-00021-0440 |
| 0945-00814-0000 | 22 AWG T&R BARE 2.5" | 5 | JW1-5 | 0151-00087-0000 |

REVISIONS

PROJ. ENG.: L. DEKKER

SATAN'S HOLLOW

**MIDWAY MFG. CO.**

FRANKLIN PK ILL

DO NOT SCALE DWG

SCALE FULL

ASSEMBLY DRAWING 125VA PWRSPY.

A082-90412-D000

PART NO M051 -00945 -D006

5/17/82

# BALLY/MIDWAY'S TAPPER
## U.R. #A11
## ROM/EPROM PART NUMBERS

UNPROGRAMED SUPER VIDEO GEN. A084-91464-L000
PROGRAMED SUPER VIDEO GEN. A084-91464-AA11

| POS. | MIDWAY PART NUMBER |
|---|---|
| 1A | 0A11-00803-0001 |
| 2A | 0A11-00803-0002 |
| 3A | 0A11-00803-0003 |
| 4A | 0A11-00803-0004 |
| 5A | 0A11-00803-0005 |
| 6A | 0A11-00803-0006 |
| 7A | 0A11-00803-0007 |
| 8A | 0A11-00803-0008 |

| JUMPERS | IN | OUT |
|---|---|---|
| JW1 | | ** |
| JW2 | ** | |
| | | |
| | | |
| | | |
| | | |
| | | |
| | | |

UNPROGRAMED 5 MHZ CPU A084-91490-H000
PROGRAMED 5 MHZ CPU A084-91490-AA11

| POS. | MIDWAY PART NUMBER |
|---|---|
| 5F | 0A11-00803-0013 |
| 6F | 0A11-00803-0014 |
| 1C | 0A11-00803-0009 |
| 2C | 0A11-00803-0010 |
| 3C | 0A11-00803-0011 |
| 4C | 0A11-00803-0012 |

| JUMPERS | IN | OUT |
|---|---|---|
| JW1 | | ** |
| JW2 | | ** |
| JW3 | ** | |
| JW4 | | ** |
| JW5 | | ** |
| JW6 | | ** |

UNPROGRAMED S/S I/O A084-90913-G000
PROGRAMED S/S I/O A084-90913-AA11

| POS. | MIDWAY PART NUMBER |
|---|---|
| 7A | 0A11-00803-0015 |
| 8A | 0A11-00803-0016 |
| 9A | 0A11-00803-0017 |
| 10A | 0A11-00803-0018 |

| EPROM | JUMPERS | IN | OUT |
|---|---|---|---|
| 2532 | JW1 | | ** |
| 2532 | JW2 | ** | |
| 2732 | JW1 | ** | |
| 2732 | JW2 | | ** |

| | REVISIONS | |
|---|---|---|
| | | |
| | | |
| 12/19/83 | RELEASE FOR PRODUCTION | |