BIONIC COMMANDO

© CAPCOM

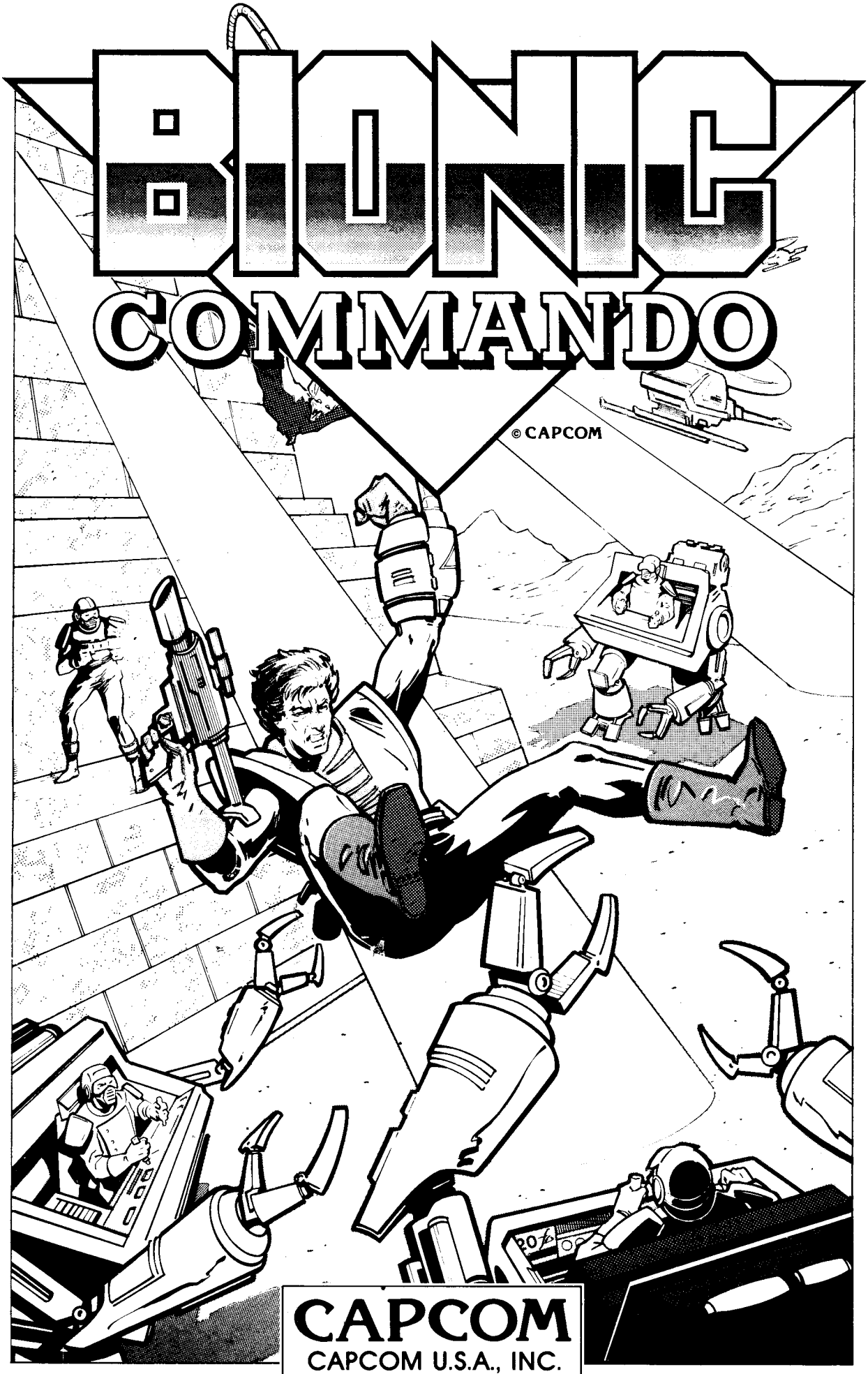

INSTRUCTION MANUAL

CAPCOM
CAPCOM U.S.A., INC.

WARNING

THIS GAME MUST BE GROUNDED. FAILURE TO DO SO MAY RESULT IN DESTRUCTION TO ELECTRONIC COMPONENTS.

WARNING: This equipment generates, uses, and can radiate radio frequency energy and if not and used in accordance with the instructions manual, may cause interference to radio communications. It has been tested and found to comply with the limits for a CLASS A computing device pursuant to SUBPART J of PART 15 of FCC RULES, which are designed to provide reasonable protection against such interference when operated in a commerical environment. Operation of this equipment in a residential area is likely to cause interference in which case the user at his own expense will be required to take whatever measures may be required to correct the interference.

CAPCOM, USA INC.

Invites You To Use

OUR TOLL FREE NUMBER FOR
SERVICE INFORMATION CONCERNING THIS GAME, OR ANY
OTHER CAPCOM GAME YOU NOW HAVE ON LOCATION.

CALL US FOR PROMPT, COURTEOUS
ANSWERS TO YOUR PROBLEMS.

Continental U.S. (800) 843-4632
California Only (408) 745-7081

TABLE OF CONTENTS

PAGE	
1	Game Play
2	Dip Switch Settings
3	Location & Set Up
4	Coin Door Maintenance
5	Control Panel Buttons
6	Coin Control Joystick Assembly
7	WICO Joystick Assembly
8	Main AC Wiring Diagram
9	Service Information On Monitor
21	Schematics (Board A)
35	Schematics Piggy Back
36	Schematics (Board B)
47	Board Interconnect
48	Jamma Connector
49	Warranty

Story:

It has been 10 years since the devastating world war. The enemy surprised us with gigantic missiles this time. After the enemy attack, our army succeeded in sending the special commando unit to infiltrate the enemy army. Their deadly mission was to discover the enemy's plans and to destroy the missiles. What can the special commando unit expect?

*There are 5 stages all together. If the player fails to prevent the missile from launching at the 5th stage, he should go back to the 4th stage. If the player succeeds, the clear message will be shown.



Stage 1	Wasted forest, Inside of enemy's area.
Stage 2	Outside of enemy's base. The player should climb enemy's fortress built on a mountain.
Stage 3	Inside of enemy's base. As soon as the player enters, he falls and reaches a water main. Then he proceeds to a factory, a freezer, and the headquarters.
Stage 4	The player proceeds from the headquarters to the control tower. He goes to the central control tower by elevator.
Stage 5	It starts at a site of the testing grounds. The player proceeds to the missile and climbs over it. He should keep going up through the headquarters, then fights with cadets in front of a bronze statue.

DIP SW - BIONIC COMMANDO

DIP sw A

ITEM	DESCRIPTION	1	2	3	4	5	6	7	8
NUMBER OF PLAYERS	3 PLAYERS 4 PLAYERS 5 PLAYERS 7 PLAYERS	OFF ON OFF ON	OFF OFF ON ON						
TABLE UPRIGHT				ON OFF					
BONUS POINTS	20,000, 40,000 & every 60,000 30,000, 50,000 & every 70,000 20,000, and 60,000 only 30,000, and 60,000 only				OFF ON OFF ON	OFF OFF ON ON			
DIFFICULTY (LEVEL)	NORMAL EASY DIFFICULT VERY DIFFICULT						OFF ON OFF ON	OFF OFF ON ON	
NOT USED									NOT USED

DIP sw B

ITEM	DESCRIPTION	1	2	3	4	5	6	7	8
COIN 1	1 COIN / CREDIT 1 1 / 2 1 / 3 1 / 4 1 / 6 1 / 1 1 / 1 1 / 1	OFF ON OFF ON OFF ON OFF ON	OFF OFF ON ON OFF OFF ON ON	OFF OFF OFF OFF ON ON ON ON					
COIN 2	1 COIN / CREDIT 1 1 / 2 1 / 3 1 / 4 1 / 6 1 / 1 1 / 1 1 / 1				OFF ON OFF ON OFF ON OFF ON	OFF OFF ON ON OFF OFF ON ON	OFF OFF OFF OFF ON ON ON ON		
TEST MODE	NORMAL TEST							OFF ON	
SCREEN FLIP	NORMAL								OFF ON

LOCATION AND SETUP

INSPECTION

1. Remove the game from its shipping crate.
2. Inspect the entire outside of it for any signs of damage.

☐ Any scratches?, dents?, cracks?

☐ Any broken controls?

☐ Just look it over closely and make a note of any signs of damage.

3. Remove the shipping cleats from the bottom of the cabinet.
4. Install the four levelers, one at each corner of the cabinet.

☐ Level the cabinet.

5. Open the cabinet and inspect the inside of the game for any signs of damage.

☐ Also check to make sure all plug-in connectors on the wire harness are firmly seated.

☐ Replug any connectors found unplugged. DO NOT FORCE PLUGS ONTO CONNECTORS. DO NOT FORCE PLUGS TOGETHER. If it won't go on easily, assuming the keys are lined up, it either does not belong there or is damaged.

☐ Make sure all printed circuit boards (P.C.B.'s) are firmly seated in their connectors. These connectors are also keyed. The P.C.B.'s will only go into them one way without being damaged.

☐ Note the location of the game's serial number.

☐ Check all major subassemblies to be sure they are mounted securely.

Power supply.
Control panel(s).
T.V. monitor.
Other P.C.B.'s and/or P.C.B. rack, etc.
Power Chassis.

6. Make a note of any problems that can't be easily corrected.
7. Call your distributor and/or service man about your problem list.

NOTE: ALL connectors or plugs are key so they will only go together when all pins are properly lined up.

COIN DOOR MAINTENANCE

Fig. 1

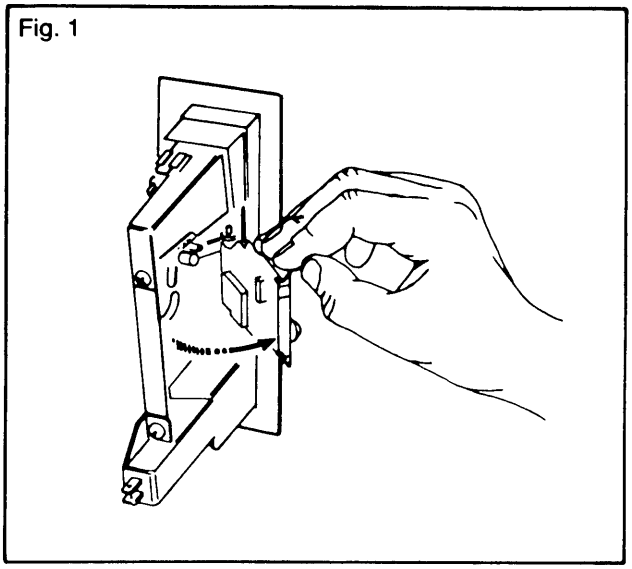

Fig. 2

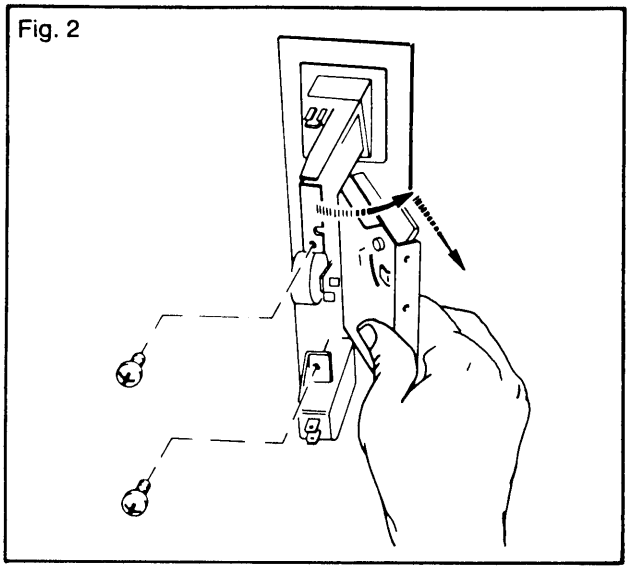

The magnet that is fitted to the mechanism, should be kept clean from foreign particles. The magnet can be cleaned by swinging the gate open. (as shown in Fig. 1). Remove metal filings from the magnet by guiding the point of a screwdriver along the edges of the magnet, such that the filings cling to the screwdriver.

The mechanism can be cleaned by immersing in water using a small brush to clean the mechanism. Rinse the mechanism with boiling water and dry with compressed air.

Note:
Since the Gold Mech relies on coins passing the magnet at a constant speed, the rejector must be free of dirt and grease which may slow down the coins. Do not lubricate the acceptor with oil as this slows down coins.

If the above procedures are not successful, check for worn, bent or damaged parts and replace where necessary.

Removal of Mechanism

To remove the coin selector: Unscrew the two screws (as shown in Fig. 2)—swing rear of selector body away from the lock-out side and withdraw.

The Gold Mech Acceptors are designed to require a minimum of maintenance and field adjustment. Coins are checked by diameter and thickness, weight, metal content, bounce, and for ferromagnetic coins such as nickel and steel, a rim test is also used.

Coin switch

The coin switch comes in two different spring tensions—identified by the color of the plastic boss at the wire's pivot point.

Red: Light tension—U.S. 25¢

White: Heavy tension—heavy foreign coins

*WICO BUTTON

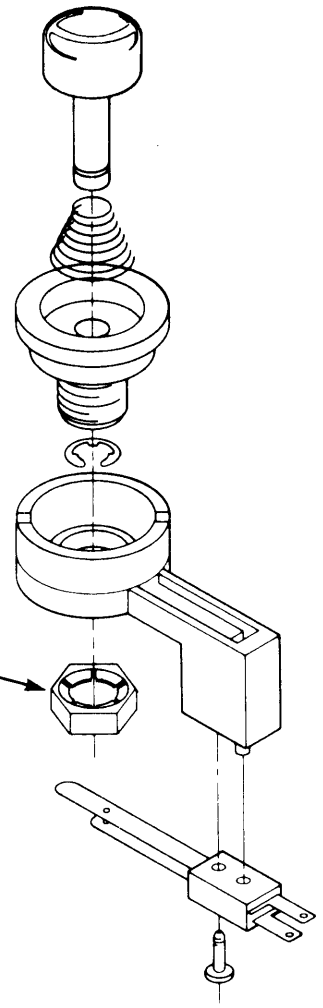

Push Button Holder
with Molded Switch and
Embossed Tabs

Wico P/N 15-9123-01

Locknut

Wico P/N 19-0254-01

*COIN CONTROL BUTTON

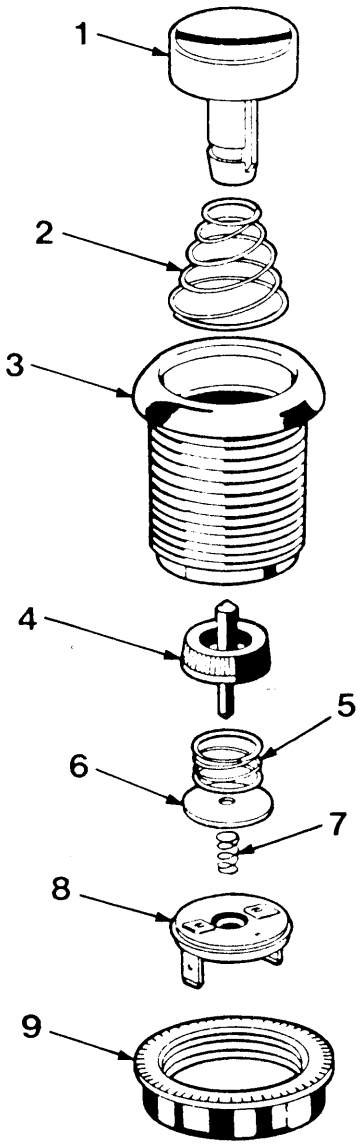

ITEM NO.	DESCRIPTION
1	Button Plunger
2	Button Spring
3	Button Bezel
4	Switch Acluator
5	Washer Spring
6	Contact Washer
7	Washer Spring
8	Contact Plate
9	Fixing Nut

* WHERE APPLICABLE

COIN CONTROL JOYSTICK *

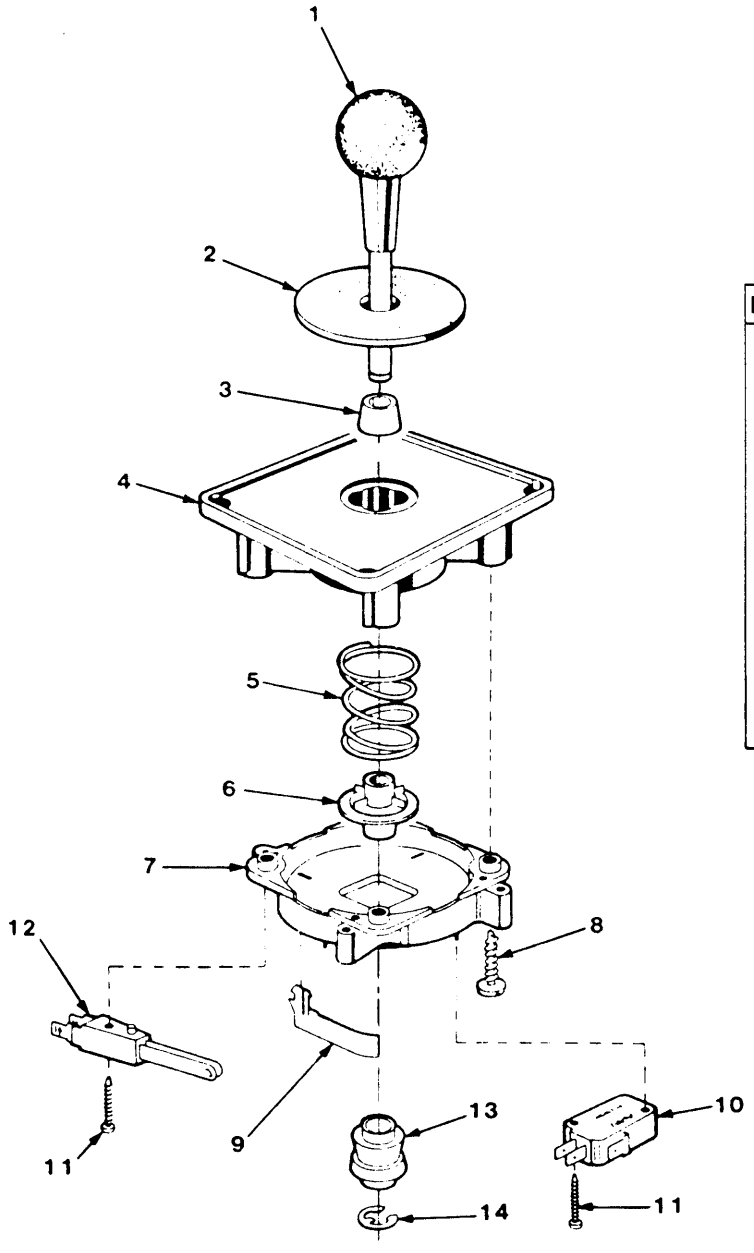

ITEM NO.	DESCRIPTION
1	1.25" Knob & Shaft
2	2" Washer
3	Pivoi Cone
4	S.T. Nylon Hub
5	Return Spring
6	Spring Bushing
7	Switch Mount Bracket
8	Screw #10 x 3/4"
9	Switch Protector
10	Micro Switch
11	Screw #4 x 3/4"
12	Side Mount Switch
13	4/8 Way Actuator
14	E-Ring

*** Where Applicable**

WICO JOYSTICK *

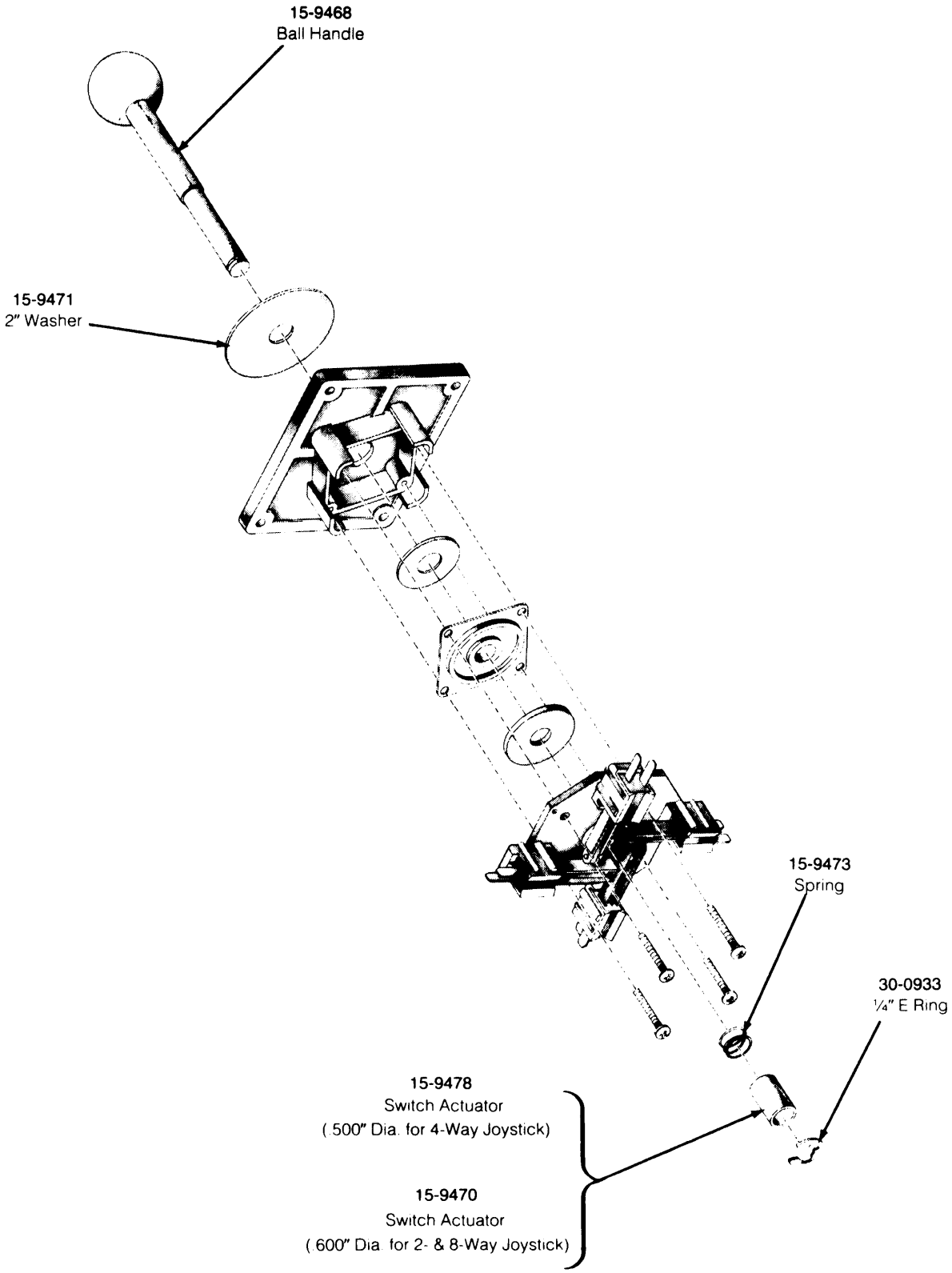

Wico Joystick Assembly (700-0163-01)

*** Where Applicable**

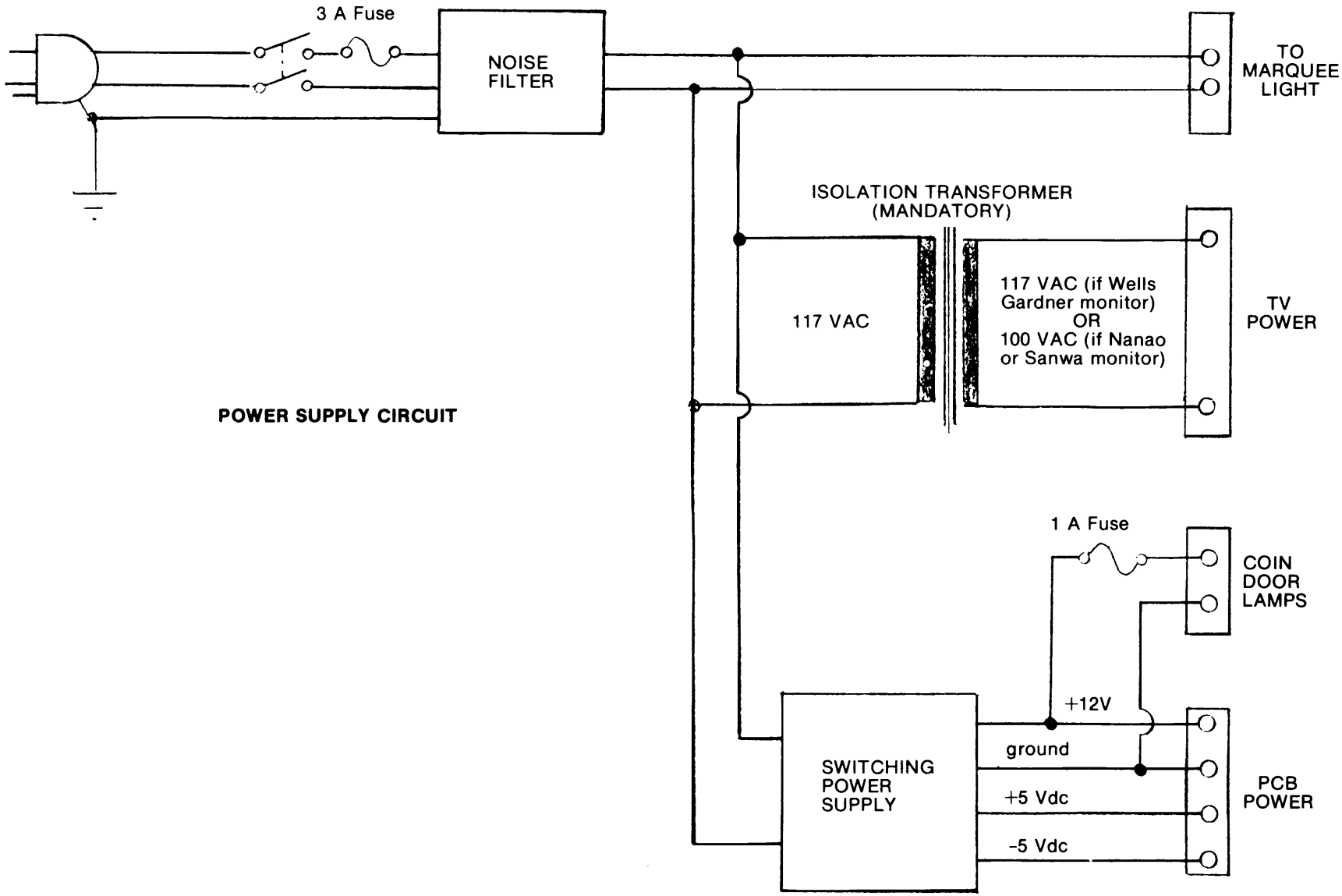

POWER SUPPLY CIRCUIT

SERVICE MANUAL FOR K7000

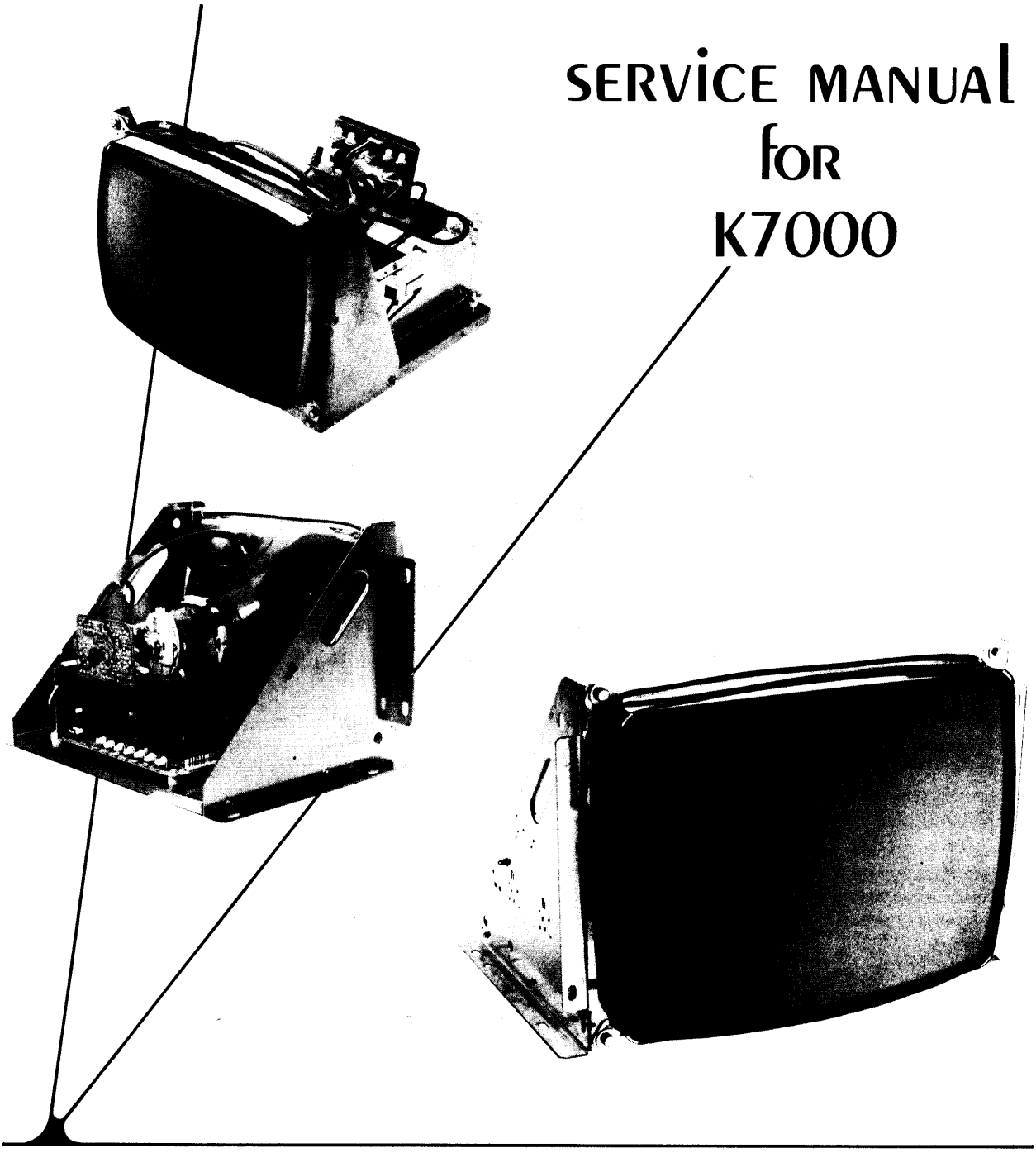

WELLS-GARDNER ELECTRONICS CORPORATION
2701 N. KILDARE, CHICAGO, IL 60639
312/252-8220 TELEX: 25-3286
FAX: 312-252-8072

SERVING CONSUMER AND INDUSTRIAL ELECTRONICS FOR MORE THAN 60 YEARS

COLOR SPECIFICATIONS

CRT

- **From 9" to 25"** diagonal measure
- **P22 phosphor**
- **Polished faceplate standard:** variety of optional faceplates and transmittances available.
- **Stripe trio spacings (standard):** 0.62 mm (9"), 0.66 mm (13"), 0.82 mm (19"), 0.82 mm (25").
- Optional finer pitches available.

INPUT SIGNALS

- **Video:** RGB analog, 1v to 5v peak-to-peak (adjustable with contrast control), 4.7k ohm input impedance, 40 usec to 50 usec active video.

Optional inputs available:

- Negative video
- RGB analog 0-0.75v, 75 ohm input impedance
- Composite video (NTSC)
- Both composite video and RGB analog: Both signal sources can be connected to the monitor at the same time. Monitor display can be switched from one to the other, at anytime at pixel or vertical frame rate.
- **Sync:** TTL positive or negative going, separate or composite. Input impedance: 20K ohms for positive going sync; 12K ohms for negative going sync.

HORIZONTAL SCAN

- **Width:** Adjustable with just one coil to accommodate active video from 40 usec to 50 usec.
- **Frequency:** 15.1 kHz to 16.8 kHz standard; higher scan frequencies avaliable.
- **Linearity:** ± 5%

PICTURE SIZE REGULATION

- 2%

VERTICAL SCAN

- **Frequency:** 47 Hz to 63 Hz
- **Linearity:** ± 5%

GEOMETRIC DISTORTION

- ± 2% (max).

VIDEO CHARACTERISTICS

- **Bandwidth (-3 db):** 12 MHz typical
- **Rise Time:** Less than 50 nanoseconds
- **Overshoot (max):** 5%

MECHANICAL

- The 19" monitor is also available in universal mount brackets. The monitor can be mounted in the user's cabinet horizontally or vertically. Contact your sales representative for details.
- The standard Prismatic-25™ 25" monitor is available as a kit - without a frame. Custom frames can be furnished.
- The standard Prismatic-9™ 9" monitor is available as a kit - without a frame: Also available in chassis form adaptable to individual customer requirements.
- Contact your sales representative for details.

USER ADJUSTABLE CONTROLS AND ADJUSTMENTS

- Brightness, Contrast, Horizontal Hold, Horizontal Size, Horizontal Raster Position, Horizontal Video Position, Vertical Hold, Vertical Size, Vertical Raster Position, Focus. Custom Control Location available.

POWER INPUT

- 120 VAC +10% -15%, 50-60 Hz, 85W (max). Isolation transformer required; furnished with monitor as an option.

ENVIRONMENTAL CONDITIONS

- Operating temperature 0° to 55°C. Complies with U.L., C.S.A., and D.H.H.S. radiation performance standard (composite video).

RESOLUTIONS

	• Standard CRT	• Fine Pitch CRT
9"	280 Pixels x 240 Lines	410 Pixels x 240 Lines
13"	400 Pixels x 240 Lines	640 Pixels x 240 Lines
19"	400 Pixels x 240 Lines	640 Pixels x 240 Lines
25"	560 Pixels x 240 Lines	N. A.

Copyright © 1987.
Wells-Gardner Electronics Corporation.
All rights reserved.

****** SPECIFICATIONS ARE SUBJECT TO CHANGE IN ORDER TO ASSURE YOU THE LATEST IN DISPLAY TECHNOLOGY.******

THIS MANUAL APPLIES TO THOSE MONITORS WITH SERIAL NUMBERS OF 576001 AND ABOVE.

WARNINGS

1. Power Up Warning–

An isolation transformer must be used between the AC supply and the AC plug of the monitor before servicing, testing, or operating the monitor since the chassis and the heat sink are directly connected to one side of the AC line which could present a shock hazard.

Before servicing is performed, read all the precautions labelled on the CRT and chassis.

2. X-RAY RADIATION WARNING NOTICE

WARNING : PARTS WHICH INFLUENCE X-RAY RADIATION IN HORIZONTAL DEFLECTION, HIGH VOLTAGE CIRCUITS AND PICTURE TUBE ETC. ARE INDICATED BY (★) IN THE PARTS LIST FOR REPLACEMENT PURPOSES. USE ONLY THE TYPE SHOWN IN THE PARTS LIST.

3. High Voltage–

This monitor contains HIGH VOLTAGES derived from power supplies capable of delivering LETHAL quantities of energy. Do not attempt to service until all precautions necessary for working on HIGH VOLTAGE equipment have been observed.

4. CRT Handling–

Care must be taken not to bump or scratch the picture tube as this may cause the picture tube to implode resulting in personal injury. Shatter proof goggles must be worn when handling the CRT. High voltage must be completely discharged before handling. Do not handle the CRT by the neck.

5. PRODUCT SAFETY NOTICE

WARNING : FOR CONTINUED SAFETY REPLACE SAFETY CRITICAL COMPONENTS ONLY WITH MANUFACTURER RECOMMENDED PARTS. THESE PARTS ARE IDENTIFIED BY SHADING AND BY (△) ON THE SCHEMATIC DIAGRAM.

AVERTISSEMENT: POUR MAINTENIR LE DEGRE DE SECURITE DE L'APPAREIL NE REMPLACER LES COMPOSANTS DONT LE FONCTIONNEMENT EST CRITIQUE POUR LA SECURITE QUE PAR DES PIECES RECOMMANDEES PAR LE FABRICANT.

For replacement purposes, use the same type or specified type of wire and cable, assuring the positioning of the wires is followed (especially for H.V. and power supply circuits). Use of alternative wiring or positioning could result in damage to the monitor or in a shock or fire hazard.

AC CONNECTORS AND TERMINALS

ALL MONITORS EXCEPT THOSE WITH MODEL NUMBERS ENDING WITH 2 OR 6:

WELLS-GARDNER END	W.G. Part No.	Molex Part No.
Plug	6A0396-001	19-09-2029
Pins Male	30X0759-001	02-09-2101
USERS' END		
Receptacle		19-09-1029
Pins, Female		02-09-1101*
		or 02-09-1116*

MODEL NUMBERS ENDING WITH 2:

WELLS-GARDNER END	W.G. Part No.	Molex Part No
Plug	6A0376-002	03-09-2022
Pins, Male	30X0759-001	02-09-2101
USERS' END		
Receptacle		03-09-1022
Pins, Female		02-09-1101*
		or 02-09-1116*

MODELS NUMBERS ENDING WITH 6:

WELLS-GARDNER END	W.G. Part No.	AMP Part No.
Receptacle	6A0402-001	350778-1
Pins, Male	30X0761-001	350538-1
USERS' END		
Plug		350777-1
Pins, Female		350537-1 **
		or 350851-1 **

*-1101 is used for 20-14 AWG wire and insulation diameter range 0.065"-0.160"
-1116 is used for 22-18 AWG wire and insulation diameter range 0.060"-0.120"

** 350537-1 is used for 20-14 AWG wire and insulation diameter range 0.130"-0.200"
350851-1 is used for 24-18 AWG wire and insulation diameter range 0.040"-0.100"

USER ADJUSTMENTS

1. BRIGHTNESS CONTROL VR6

This control has been preset at the factory. However, when the video signal is applied to the monitor, a slight adjustment may be desired. Adjust this control such that the illumination is just barely extinguished from portions of the display which should be black.

2. CONTRAST CONTROL VR7

Adjust the contrast control for the desired picture intensity.

3. FOCUS CONTROL

Adjust the focus control, located on the high voltage unit (T1), for maximum over-all definition and fine picture detail.

4. HORIZONTAL HOLD CONTROL VR2

With the monitor being driven with the display signal, connect one jumper between TP1 and TP2 and another jumper between TP3 and TP4. Adjust the horizontal hold control until the picture stops sliding horizontally. Remove the jumpers. Do not use the horizontal hold control for horizontal centering. (See #5).

NOTE: If the sync signal is composite, use the horizontal sync input of the same polarity as the composite sync signal.

5. HORIZONTAL VIDEO SHIFT CONTROL VR1

Use this control to center the picture horizontally.

6. HORIZONTAL RASTER POSITION ADJUSTMENT

If the picture is off center horizontally (long dimension of picture tube), some compensation can be made by moving the horizontal raster position adjustment jumper either to positions "R" or "L".

7. HORIZONTAL SIZE COIL L1

The horizontal size coil is a hexagonal tuning tool adjustment. This control must be adjusted slowly, if necessary, until the picture or test pattern attains the correct horizontal proportions.

8. VERTICAL HOLD CONTROL VR5

Adjust this control until the picture stops rolling and it locks in vertically.

9. 50-60 Hz CONTROL VR9

This control is used to limit the range of vertical size. This control is preset at the factory and should not require readjustment unless the vertical size control or vertical hold control are readjusted from their original factory setttings. In order to set this control, first adjust the vertical size control so that the picture is slightly larger than desired. Turn VR9 so that any vertical foldover which may be present will disappear. If the monitor is to be operated alternately at more than one vertical frequency, then perform this adjustment at the higher frequency.

10. VERTICAL SIZE CONTROL

This control must be adjusted slowly, if necessary, until the picture or test pattern attains the correct vertical proportions.

11. VERTICAL RASTER POSITION CONTROL VR3

If the video is off center vertically, (short dimension of picture tube) some compensation can be made by turning the vertical raster position control.

12. CUT OFF AND DRIVE CONTROLS ON NECK BOARD VR201, VR202, VR203, VR204, VR205, VR206.

These controls have been preset at the proper gray scale. Before adjusting any of these controls, refer to Troubleshooting Note 4 and to the White Balance procedure.

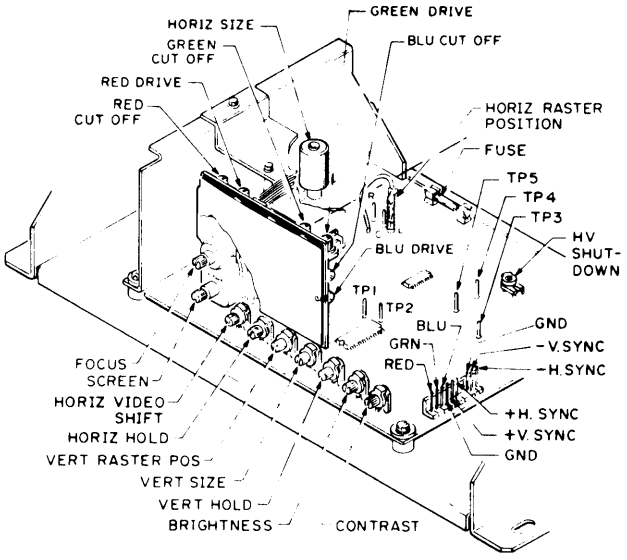

FIG. 1A

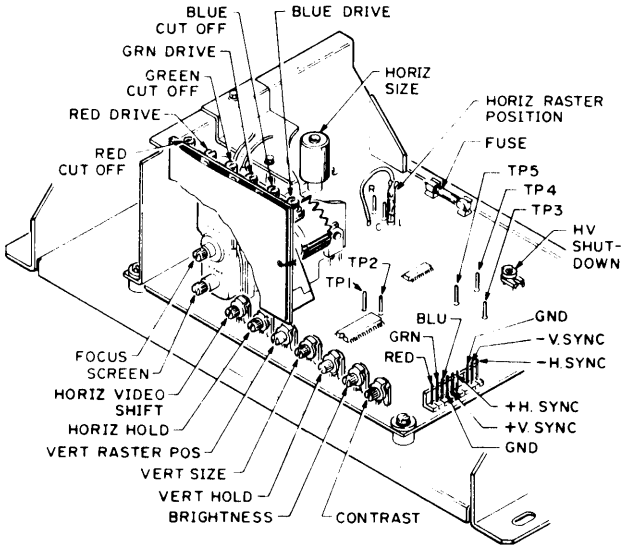

FIG. 1B

TROUBLESHOOTING CHART

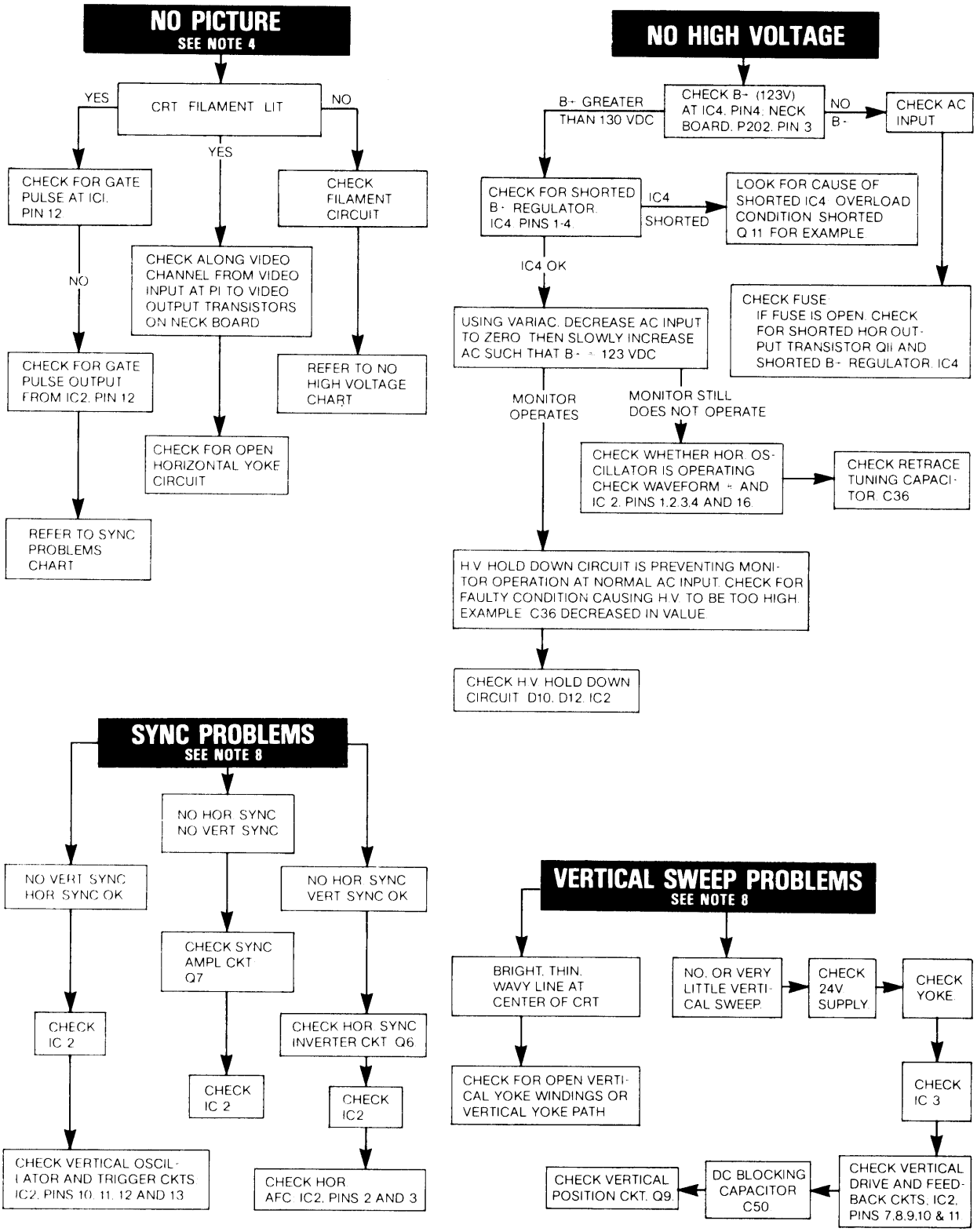

VIDEO INTERFACE AND OUTPUT

The red, green, and blue video inputs come into the monitor at P1. Isolation and attenuation is provided by emitter followers Q1, Q2 and Q3. Forced blanking of the video signals is provided by the circuit of Q4, D5, D6, and D7. The forced blanking causes there to be an interruption in the video signal before it goes to the inputs of IC1. This interruption occurs between scan periods, while retrace is taking place; it is required by IC1. The forced blanking is not necessary for most video signals since they already have an interruption of video (blanking) between scan periods. Some do not; it is to accommodate such signals that the forced blanking circuit is included.

The red, green, and blue signals go into IC1 at pins 2, 4, and 6. Their levels are controlled by the gain of separate channels of the contrast amplifier. The gain is controlled by a DC voltage input to pin 11, which varies with the setting of the contrast control.

IC1 provides blanking of the video during retrace in response to blanking pulses at pin 13, derived from the horizontal and vertical sweep circuits. IC1 also requires a gating signal at pin 12 in order to provide red, green, and blue outputs at pins 21, 19, and 17. If the gating signal is not present, IC1 will not provide video output signals. The gating signal comes from IC2, pin 12 and is derived from horizontal sync.

The brightness is varied by varying the DC level of the outputs at pins 17, 19, and 21. This is accomplished by varying the DC voltage input to pin 14.

The video outputs from IC1 are provided via R30, R31, and R32 to the neck board where they are amplified by the video output stages Q201, Q202, and Q203 before being applied to the cathodes of the CRT through R10, R11, and R12.

SYNC

Sync is applied at P1 (positive sync) or at P2 (negative sync). Composite sync should be applied only to the horizontal sync input of the appropriate polarity. Positive sync is inverted by Q5 and Q6 then applied through D3, D4 and R51 to the sync amplifier Q7.

The sync amplifier output is applied through C22, R53, and R55 to pin 14 of IC2. Pin 14 is the sync separation input.

The sync separator extracts the horizontal and vertical sync from each other–providing horizontal sync to the horizontal AFC circuit in the IC. A composite sync output is provided at pin 12. This output signal is used for gating IC1 the video interface IC and for triggering the vertical oscillator.

HORIZONTAL OSCILLATOR AND OUTPUT

The horizontal AFC circuit of IC2 receives a horizontal sync input from the sync separator and a feedback signal at pin 1, derived from the horizontal output. Slight differences in frequency and phase of the two signals will cause the AFC to generate a correction voltage at pin 2.

The horizontal oscillator in IC2 has its free running frequency determined by the RC time constant of C19, R56, R57, R58, and VR2, the horizontal hold control. The horizontal hold control varies the horizontal frequency by varying the RC time constant. Slight correction in frequency is provided by a correction voltage at IC2, pin 3 which comes from pin 2 through R60.

The oscillator output at pin 4 is amplified and shaped by the horizontal drive stage Q10. The drive signal is then coupled to the base circuit of the horizontal output transistor Q11 by the horizontal drive transformer T2. T2 is used for impedance transformation to provide the Q11 base circuit with the low impedance source that it requires.

The horizontal output transistor Q11 is operated as a switch. It is either on or off. It is turned on and off at the scan rate which is determined by the horizontal oscillator frequency which is ultimately determined by the incoming horizontal sync frequency. A yoke current with a sawtooth waveform is needed to deflect the beam linearly across the CRT. The beam begins at the center of the CRT and is deflected from center to right. This center-to-right deflection occurs when Q11 is turned on. The deflection yoke coupling capacitor C38, also known as the S-shaping capacitor, begins to discharge through the yoke; the discharge current causes the beam to be deflected to the right CRT edge. At this time, Q11 is turned off, and the current provided by C38 stops. As the current falls to zero, a voltage is induced across the yoke windings as the magnetic field collapses; an oscillation is produced by the yoke windings and C36, the retrace tuning capacitor. During the first half cycle of oscillation, the induced voltage is impressed on the collector of Q11, C36, and the primary of they flyback transformer T1. This induced voltage is stepped up by the flyback transformer's secondary winding. This high voltage is then rectified and applied to the high voltage anode of the CRT. When this induced voltage occurs, the electron beam is deflected from the right edge of the CRT face to the left edge. This is called retrace. During the second half cycle of the oscillation (of C36 and the yoke windings), the voltage at the Q11 collector tries to go negative or below ground. When this happens, the damper diode (include in same package with Q11) becomes forward biased. The conduction of the damper diode allows energy stored in the horizontal system to decay linearly to zero, thus allowing the beam to return to the center of the CRT face.

The focus voltage and the screen, G2, voltage are obtained from the anode voltage with a resistor divider network within the T1 assembly. An auxiliary winding (pin 10) provides feedback to the horizontal AFC through R71, R70, and C29. This signal is also used to furnish the horizontal blanking input to IC1 via C28, R69, and R68. The signal from the auxiliary winding at pin 5 of T1 is rectified by D14 and filtered to provide the +12VDC supply for the video interface and sync circuits. The auxiliary winding of pins 3 and 4 produces a signal which is rectified by D13 and filtered to produce the +24VDC supply for the vertical output circuit.

The horizontal linearity coil L2 is a magnetically biased coil which shapes the yoke current for optimum linearity. The horizontal size coil L1 is a variable series inductor which is used to vary the horizontal size of the display.

HIGH VOLTAGE HOLD-DOWN CIRCUIT

The high voltage hold down circuit is part of the main PC board P447 of this monitor. The +12V DC supply is sensed via D10. Since the +12V DC supply is flyback pulse derived, the +12V DC supply will rise as the high voltage rises. If the +12V DC exceeds a threshold which is set with VR8, then D12 will conduct, thereby providing drive to IC2, pin 5–holddown input of deflection oscillator IC. The drive being applied to pin 5 causes the horizontal oscillator within the IC to shut down–thus preventing the generation of high voltage.

The horizontal oscillator will remain in its OFF state, even if the input to IC2, pin 5 is removed, unless and until AC power is removed from the monitor input. The power may then be reapplied.

VERTICAL OSCILLATOR AND OUTPUT

The composite sync ouput of IC2, pin 12 is filtered through the network of R65, C25, C24 and R66 so that only vertical sync is applied to the vertical trigger input at pin 11. The vertical oscillator frequency is controlled by the vertical hold control and its input to pin 10.

The vertical drive output at IC2, pin 7 is applied to pin 4 of IC3, the vertical output IC. Output current from IC3, pin 2 flows through the yoke to cause vertical deflection. During upward deflection, current flows out of pin 2, through the yoke, and into C50 to charge it. Downward deflection is caused by C50 discharging through the yoke in the opposite direction and back into IC3, pin 2. AC feedback is provided through the wiper of the vertical size control VR4 to IC2, pin 8 in order to control the drive amplitude. DC feedback at IC2, pin 9 maintains good vertical linearity at all sizes.

DC current from the +24V supply flows through R83 and through the yoke to provide downward raster shift. Some of this DC current is diverted from the yoke through the collector of Q9. The amount of this current which is diverted from the yoke can be varied by varying the base drive to Q9 by adjusting VR3, the vertical position control, thus providing manual adjustment of the vertical position of the display.

The drive signal at IC3, pin 2 is also used to furnish the vertical blanking input to IC1, pin 13 via R63 and C14.

AUTOMATIC DEGAUSSING ADG

The ADG circuit automatically demagnetizes the CRT. This circuit is activated only when the monitor is initially powered up after having been off for at least 20 minutes.

R105 is a positive temperature coefficient device. When it is cold, it has a very low resistance. As it gets warm, its resistance increases. If the monitor is cold when AC power is applied, then R105 with a low resistance allows current to pass through it, D23, D24, and the degaussing coil. As current flows through R105, it heats up and eventually has a very high resistance, allowing very little current to flow through it. The residual current now flowing through R105 produces a voltage drop across R104 of less than 0.6 volts. This is not enough to forward bias D23 and D24, so there is no current through the degaussing coil.

The process of initially having a large current through the degaussing coil and then having the current decay to zero is what produces the degaussing action. The degaussing current decays to zero before the CRT warms up, so the degaussing is completed before the picture comes on.

K7000 COLOR MONITOR SCHEMATIC DIARAM

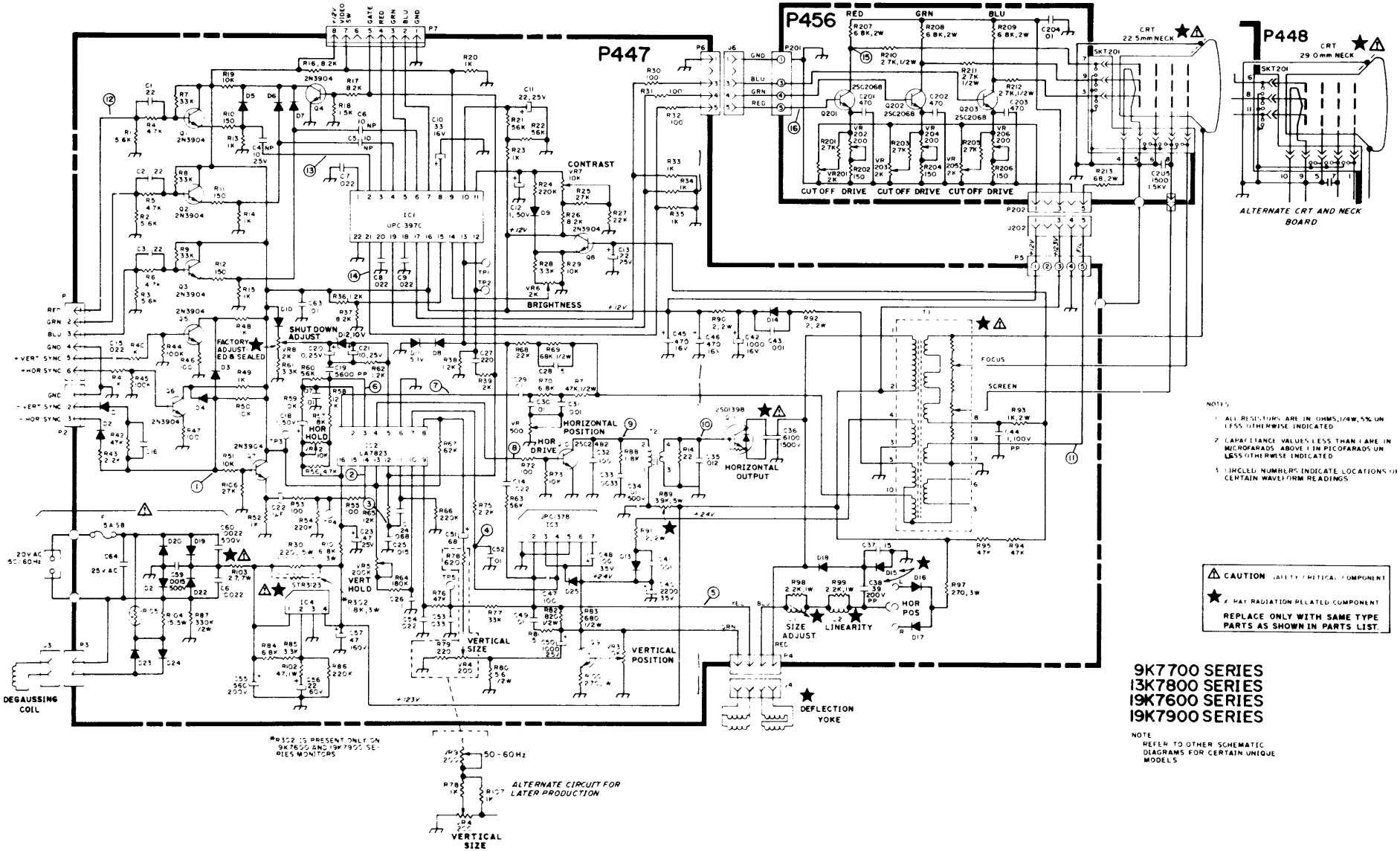

NOTES

1. ALL RESISTORS ARE IN OHMS, 1/4W, 5% UNLESS OTHERWISE INDICATED
2. CAPACITANCE VALUES LESS THAN 1 ARE IN MICROFARADS ABOVE 1 IN PICOFARADS UNLESS OTHERWISE INDICATED
3. CIRCLED NUMBERS INDICATE LOCATIONS OF CERTAIN WAVEFORM READINGS

*R352 IS PRESENT ONLY ON 9K7600 AND 19K7900 SERIES MONITORS

9K7700 SERIES
13K7800 SERIES
19K7600 SERIES
19K7900 SERIES

NOTE
REFER TO OTHER SCHEMATIC DIAGRAMS FOR CERTAIN UNIQUE MODELS

PC BOARD LAYOUT P456

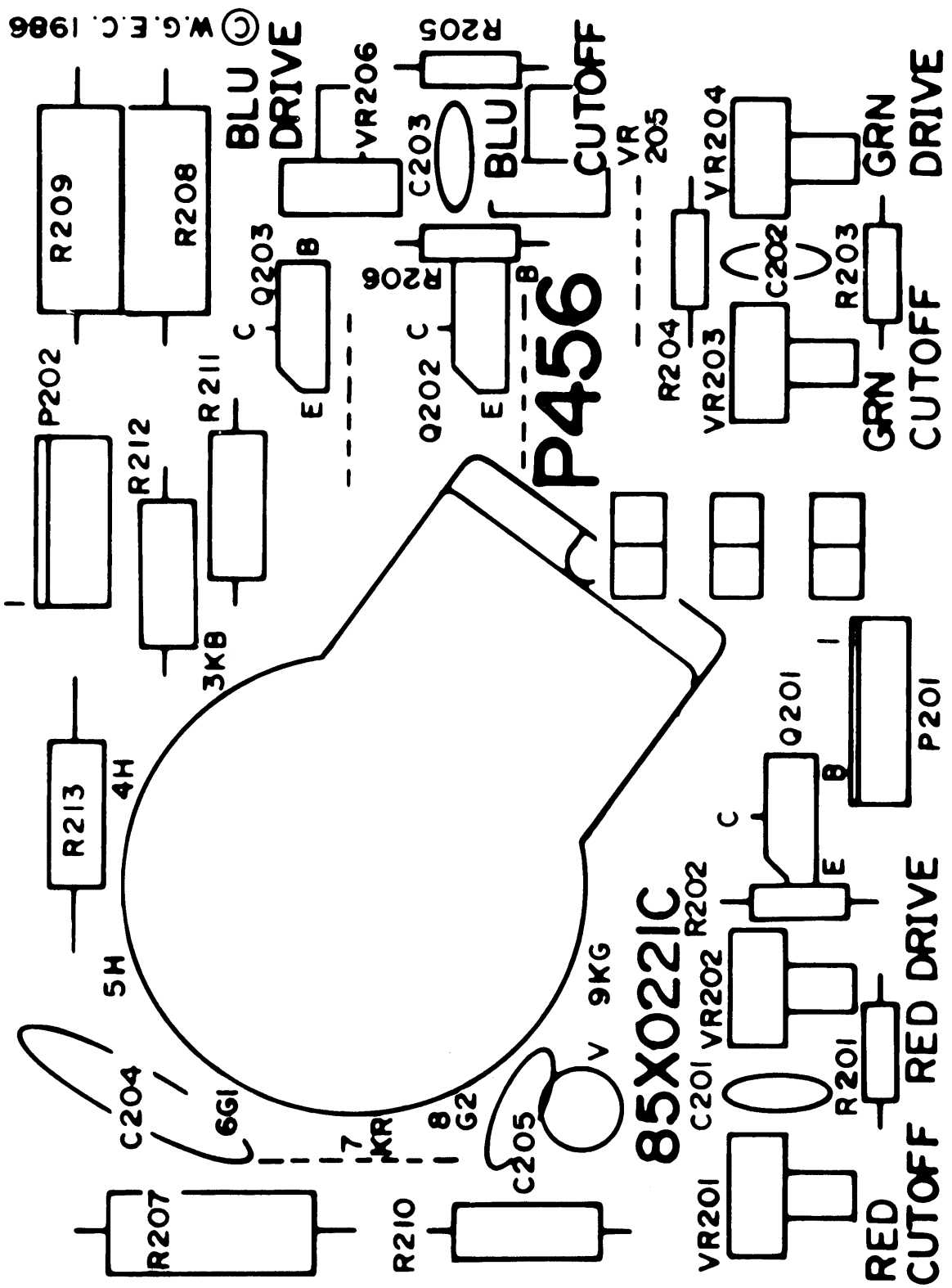

FIG. 12

PC BOARD LAYOUT P448

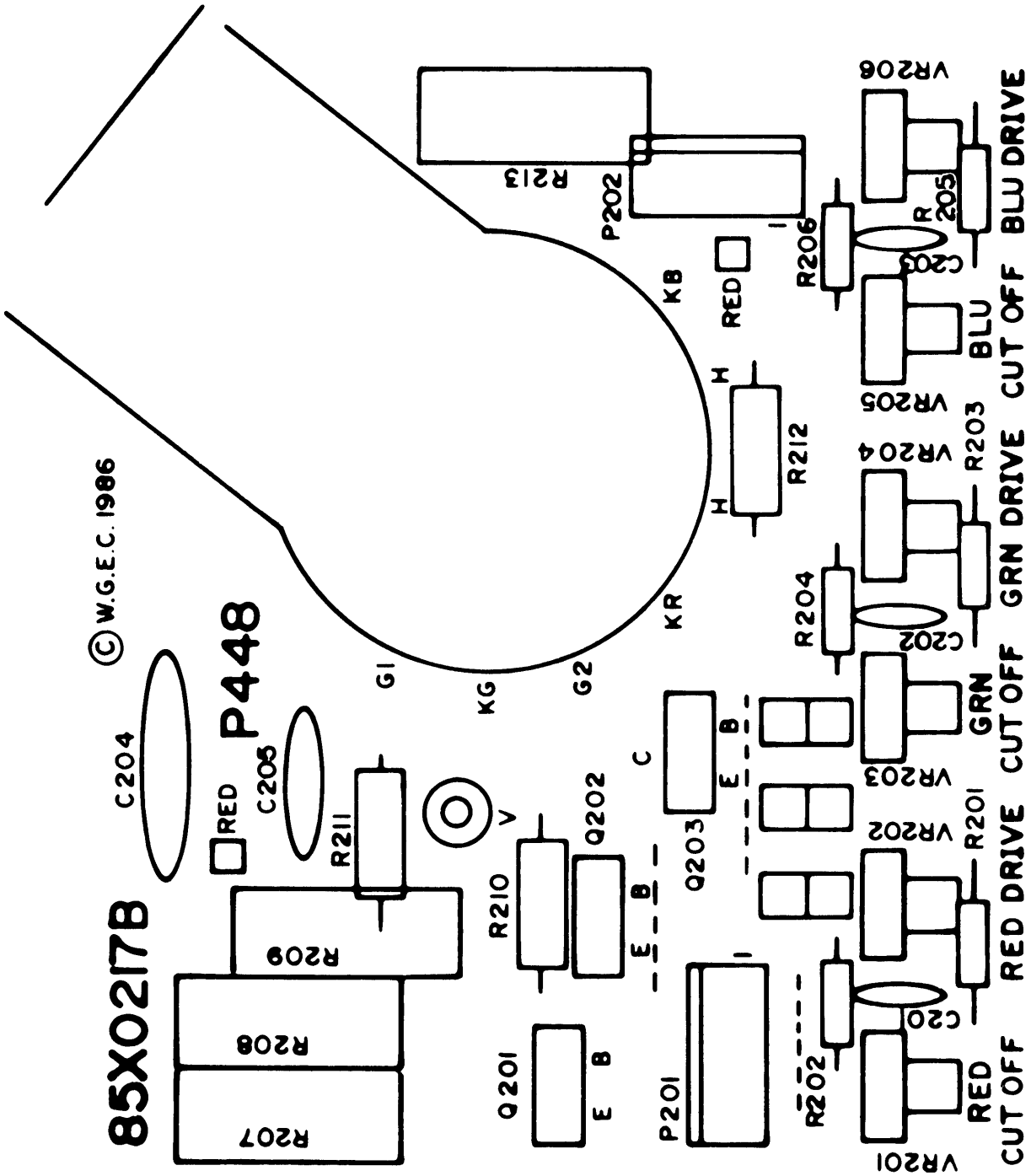

VIEW OF COMPONENT SIDE

FIG. 13

MAIN PC BOARD LAYOUT

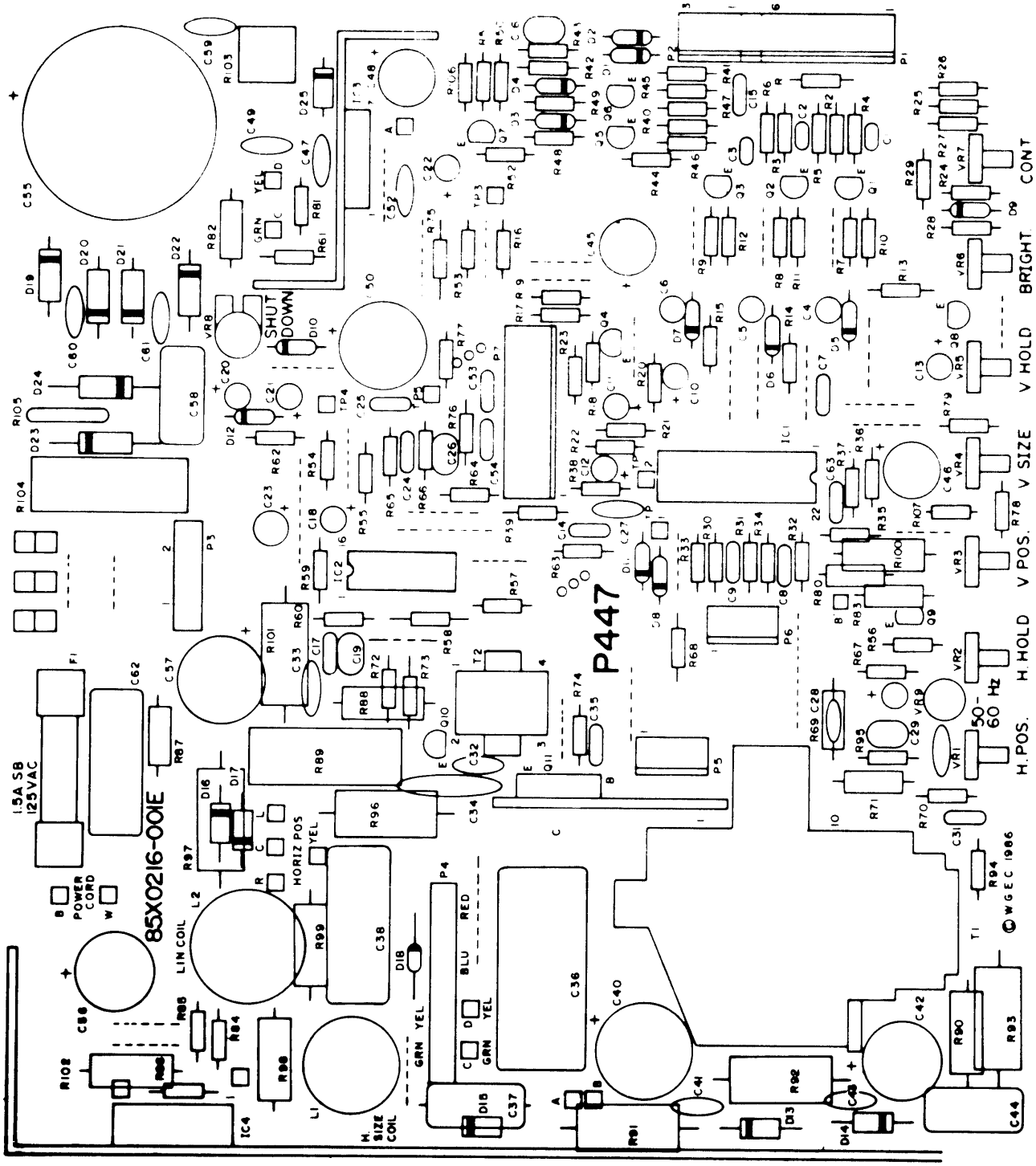

FIG. 14

FRONT CONTROL BOARD P485

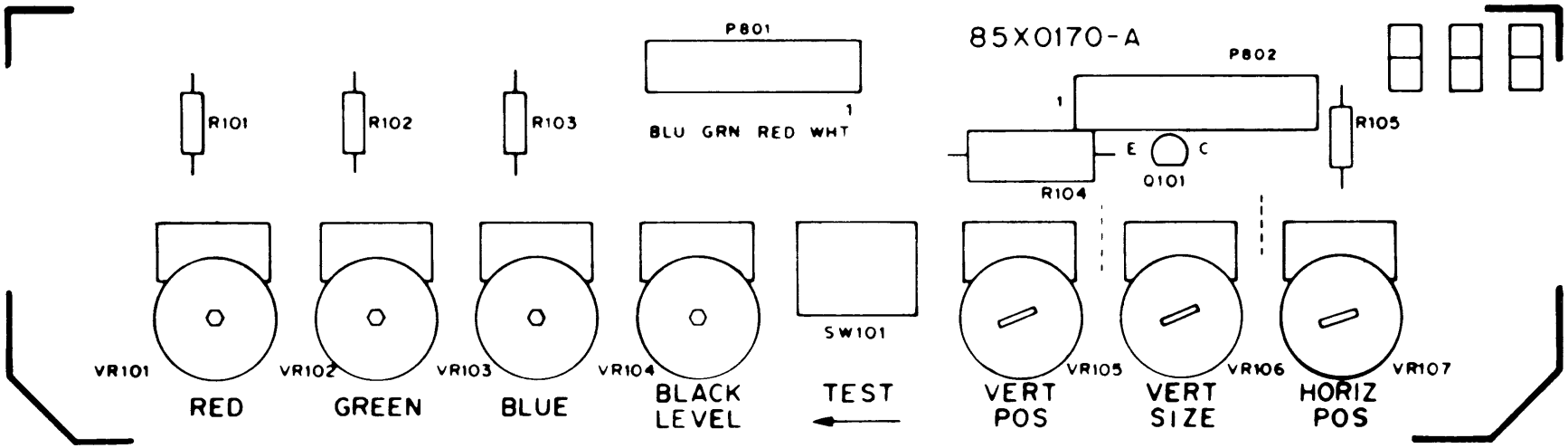

FIG. 15

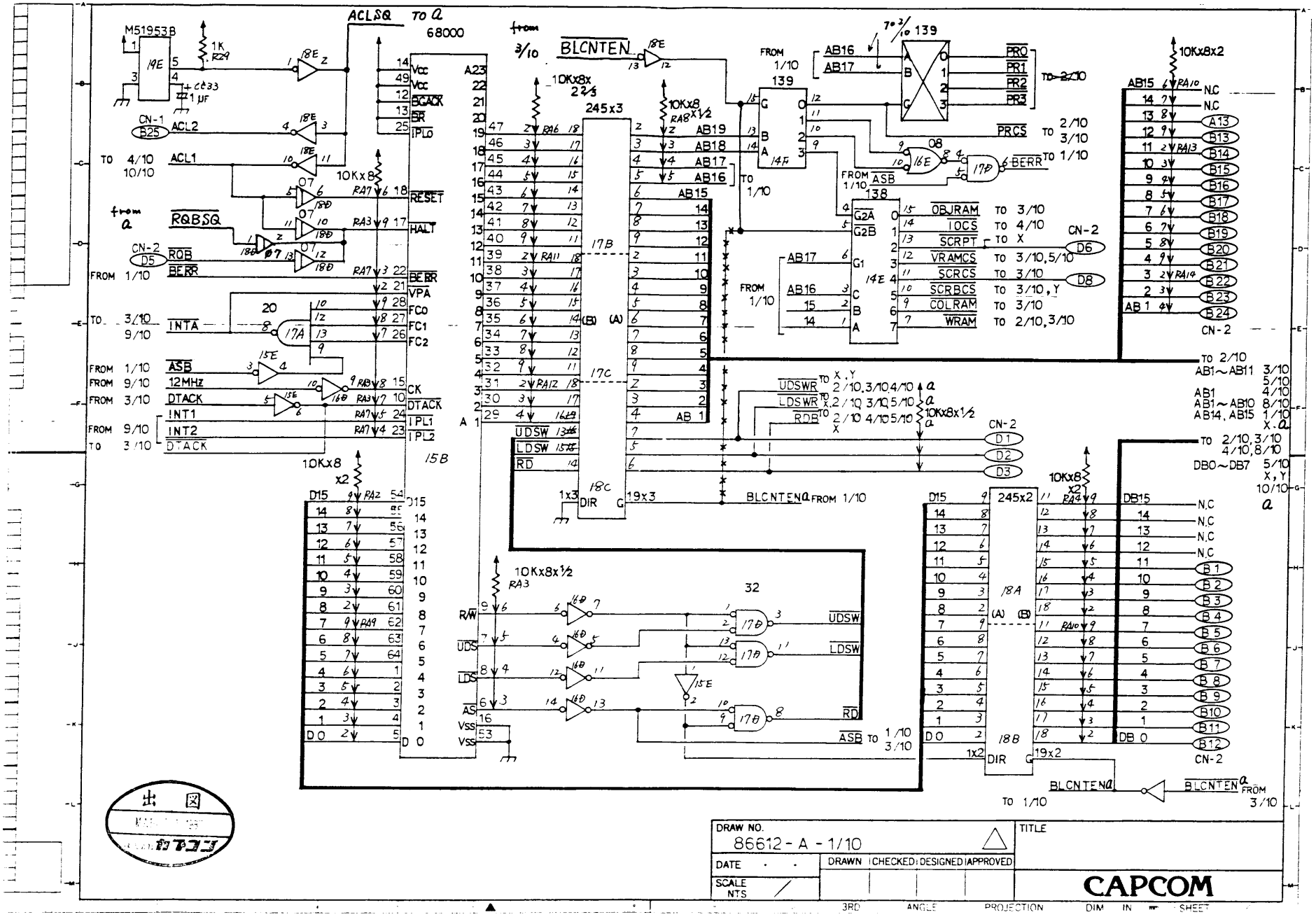

M51953B
ACLSQ TO a
68000
from 3/10
BLCNTEN
245x3
139
138
245x2
RQBSQ
from a
CN-1
CN-2
ACL2
ACL1
RQB
BERR
INTA
ASB
12MHz
DTACK
INT1
INT2
RESET
HALT
VPA
FC0
FC1
FC2
CK
IPL1
IPL2
UDSW
LDSW
RD
DIR
OBJRAM
IOCS
SCRPT
VRAMCS
SCRCS
SCRBCS
COLRAM
WRAM
PR0
PR1
PR2
PR3
PRCS
BLCNTEN a FROM 1/10
BLCNTEN a FROM 3/10
AB1~AB11
AB1
AB1~AB10
AB14, AB15
DB0~DB7
DRAW NO.
86612 - A - 1/10
TITLE
DATE
SCALE NTS
DRAWN
CHECKED
DESIGNED
APPROVED
CAPCOM
3RD ANGLE PROJECTION DIM IN SHEET

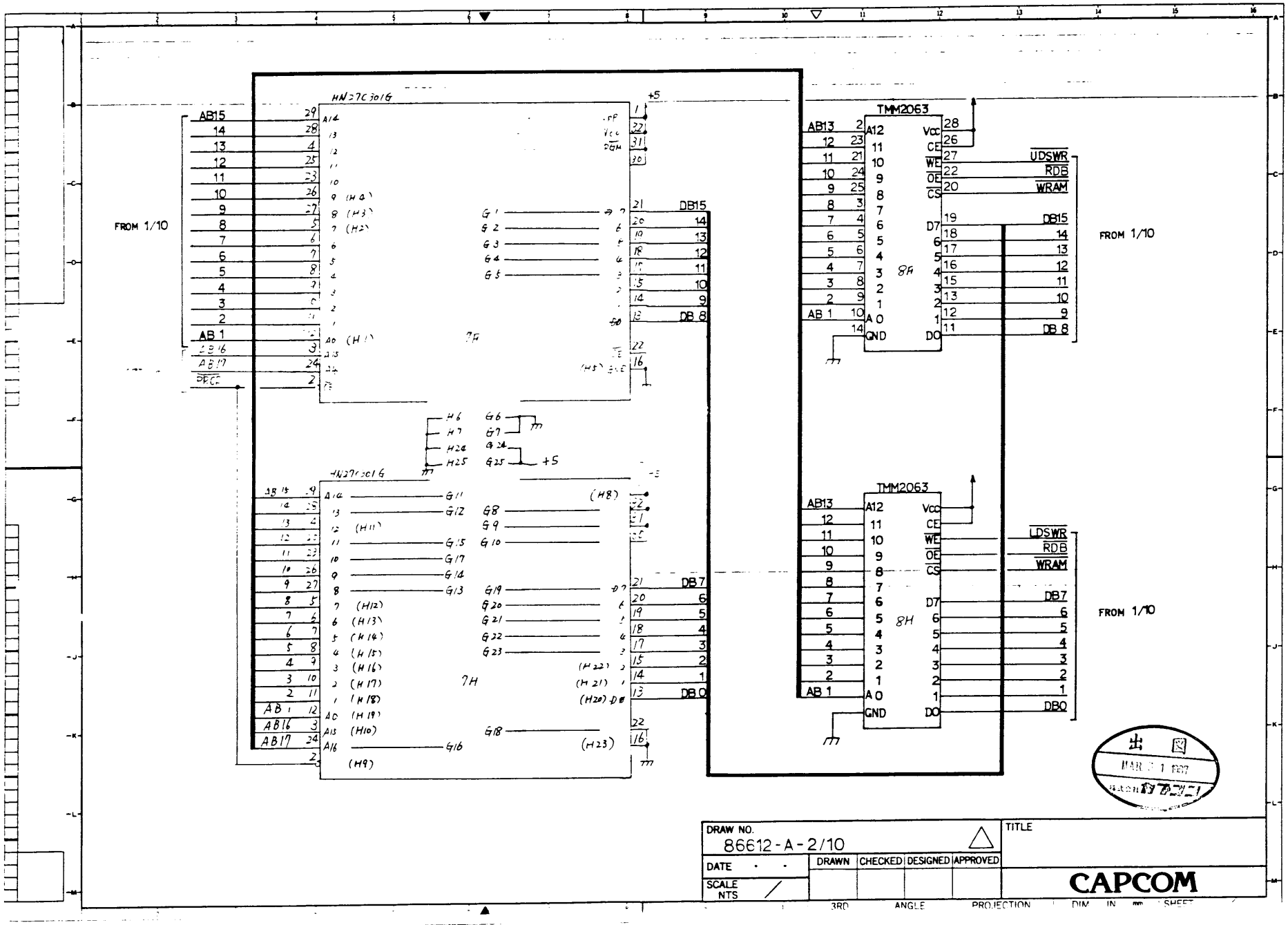
HN27C3016
7A
7H
TMM2063
8A
8H
FROM 1/10
AB15
AB16
AB17
AB 1
DB15
DB 8
DB7
DB0
UDSWR
LDSWR
RDB
WRAM
+5
GND
CAPCOM

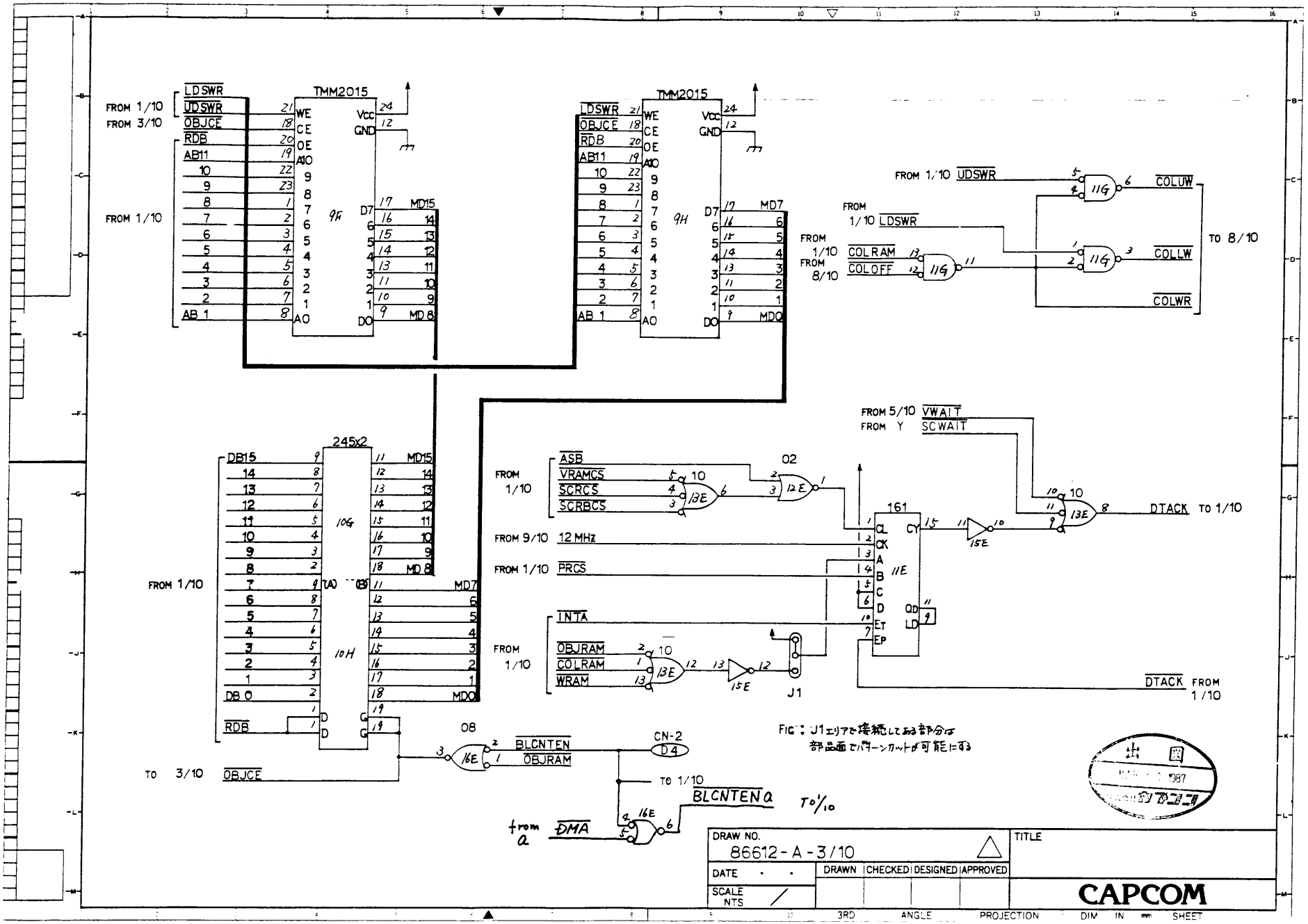

FIG : J1エリアで接続してある部分は
部品面でパターンカットが可能にする

DRAW NO. 86612-A-3/10					TITLE
DATE	DRAWN	CHECKED	DESIGNED	APPROVED	
SCALE NTS					CAPCOM

3RD ANGLE PROJECTION DIM IN mm SHEET

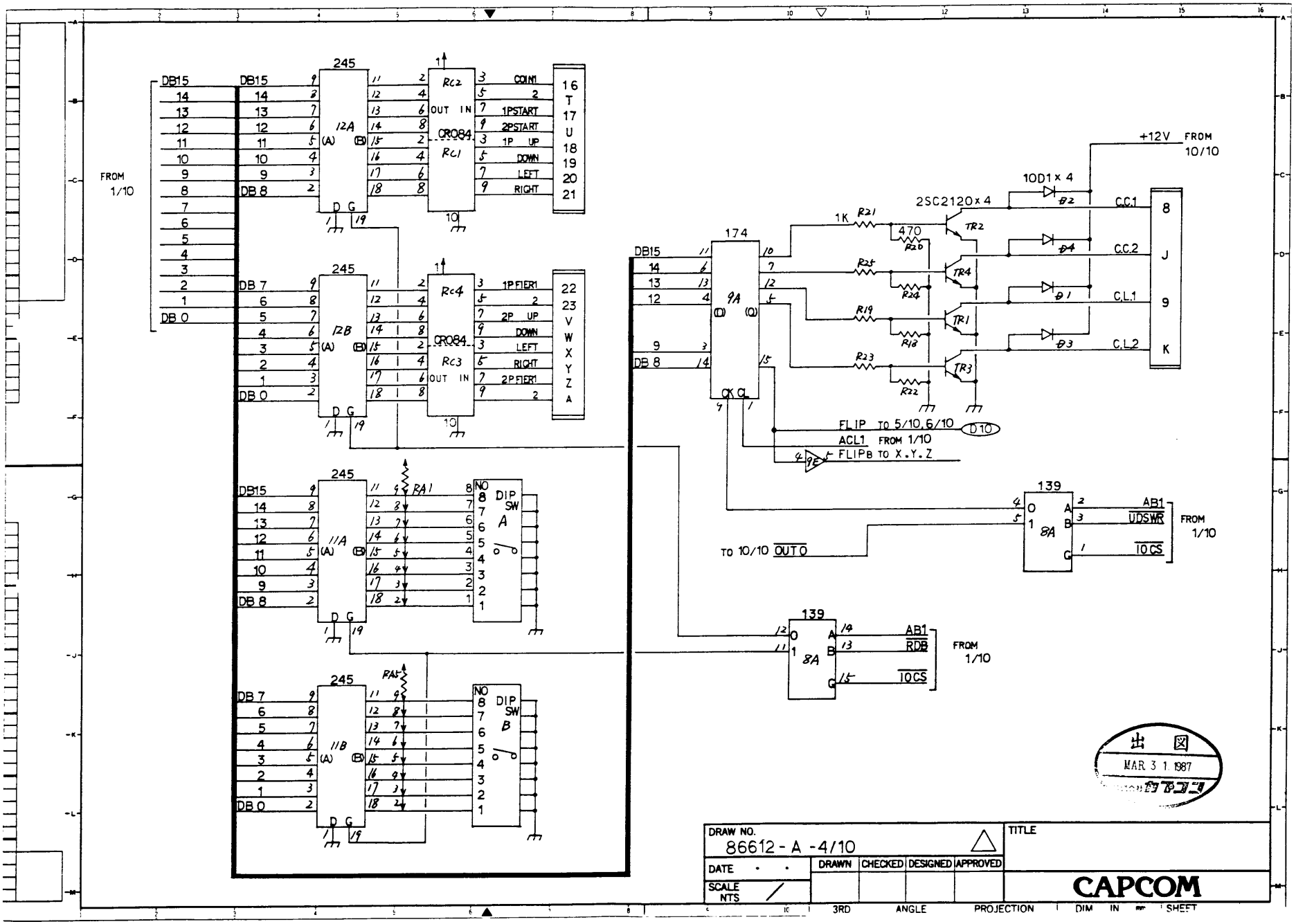
245
12A
12B
11A
11B
Rc2
Rc1
Rc4
Rc3
CR084
RA1
RA2
DIP SW A
DIP SW B
174
9A
139
8A
FROM 1/10
+12V FROM 10/10
10D1 x 4
2SC2120 x 4
1K R21
470 R20
TR1
TR2
TR3
TR4
FLIP TO 5/10,6/10
ACL1 FROM 1/10
FLIPB TO X.Y.Z
TO 10/10 OUT0
AB1
UDSWR
RDB
IOCS
C.C.1
C.C.2
C.L.1
C.L.2
COIN1
1PSTART
2PSTART
1P UP
DOWN
LEFT
RIGHT
1P FIER1
2P UP
2P FIER1
MAR 3 1 1987
DRAW NO.
86612 - A -4/10
DATE
SCALE NTS
DRAWN
CHECKED
DESIGNED
APPROVED
TITLE
CAPCOM
3RD ANGLE PROJECTION
DIM IN mm SHEET

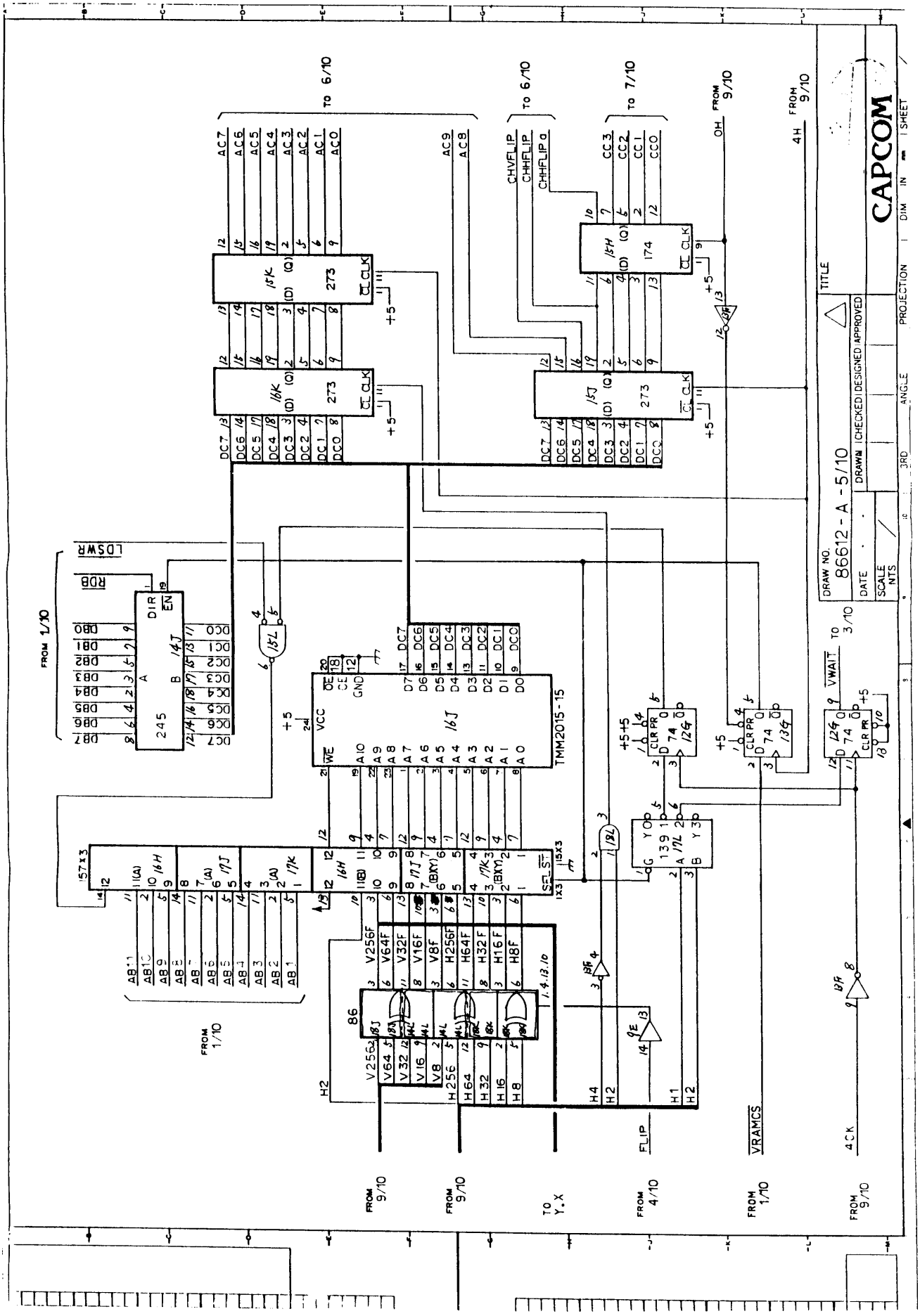
CAPCOM
DRAW NO.
86612 - A - 5/10
DATE
SCALE
NTS
DRAWN
CHECKED
DESIGNED
APPROVED
TITLE
PROJECTION
DIM IN mm
SHEET
3RD
ANGLE
TO 6/10
TO 6/10
TO 7/10
FROM 9/10
FROM 9/10
FROM 1/10
FROM 1/10
FROM 9/10
FROM 9/10
TO Y.X
FROM 4/10
FROM 1/10
FROM 9/10
TO 3/10
LDSWR
RDB
TMM2015-15
VWAIT
FLIP
VRAMCS
4CK
CHVFLIP
CHHFLIP
CHHFLIP a
OH
4H

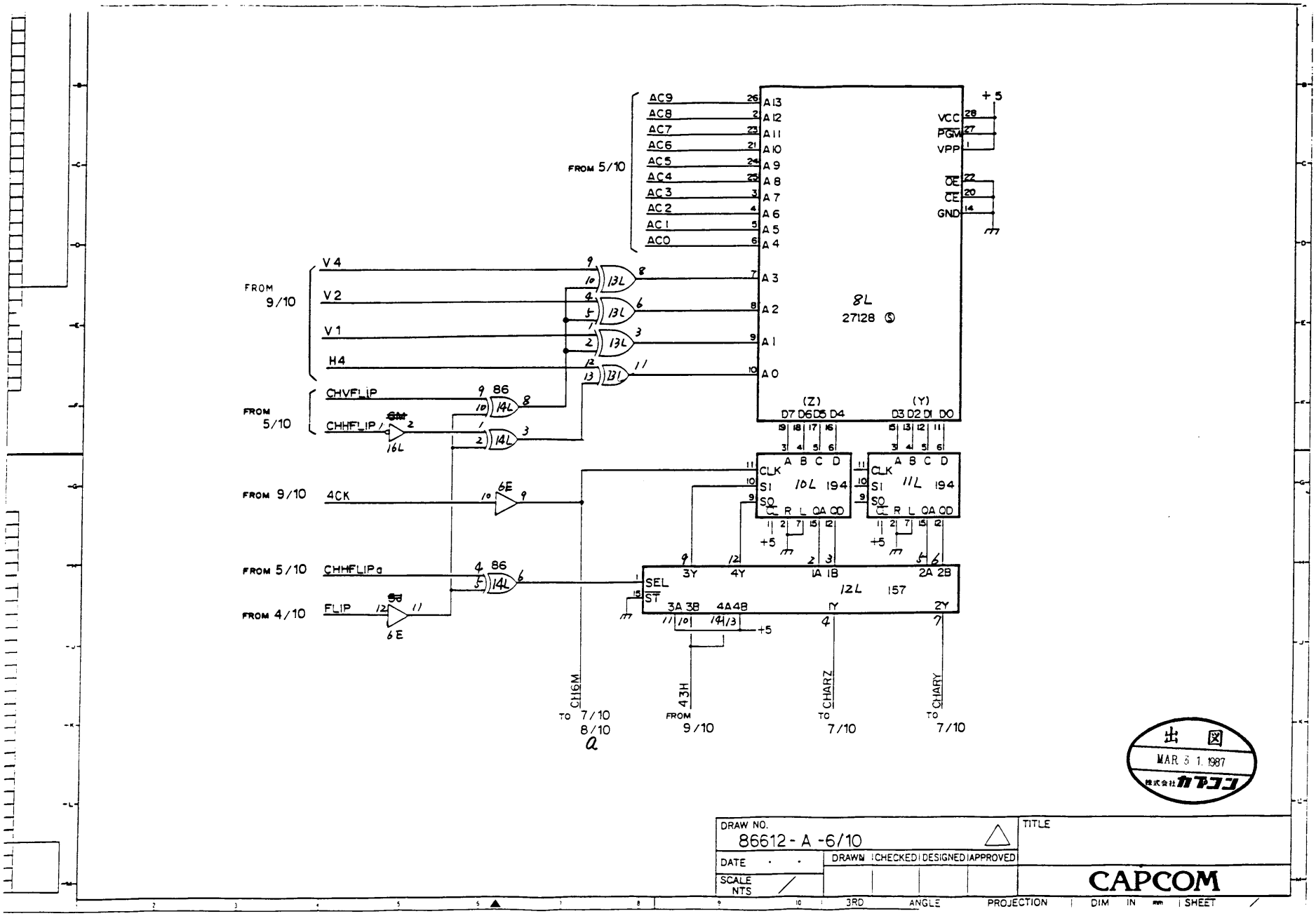
FROM 5/10
AC9
AC8
AC7
AC6
AC5
AC4
AC3
AC2
AC1
AC0
A13
A12
A11
A10
A9
A8
A7
A6
A5
A4
A3
A2
A1
A0
VCC
PGM
VPP
OE
CE
GND
+5
8L
27128
FROM 9/10
V4
V2
V1
H4
13L
FROM 5/10
CHVFLIP
CHHFLIP
86
14L
16L
FROM 9/10
4CK
6E
FROM 5/10
CHHFLIPa
FROM 4/10
FLIP
6E
(Z)
D7 D6 D5 D4
(Y)
D3 D2 D1 D0
CLK
S1
S0
10L 194
11L 194
SEL
ST
3Y
4Y
1A 1B
2A 2B
12L 157
3A 3B
4A 4B
1Y
2Y
CH6M
TO 7/10
8/10
a
43H
FROM 9/10
CHARZ
TO 7/10
CHARY
TO 7/10
出図
MAR 31 1987
株式会社カプコン
DRAW NO.
86612-A-6/10
TITLE
DATE
DRAWN
CHECKED
DESIGNED
APPROVED
SCALE
NTS
CAPCOM
3RD
ANGLE
PROJECTION
DIM
IN
SHEET

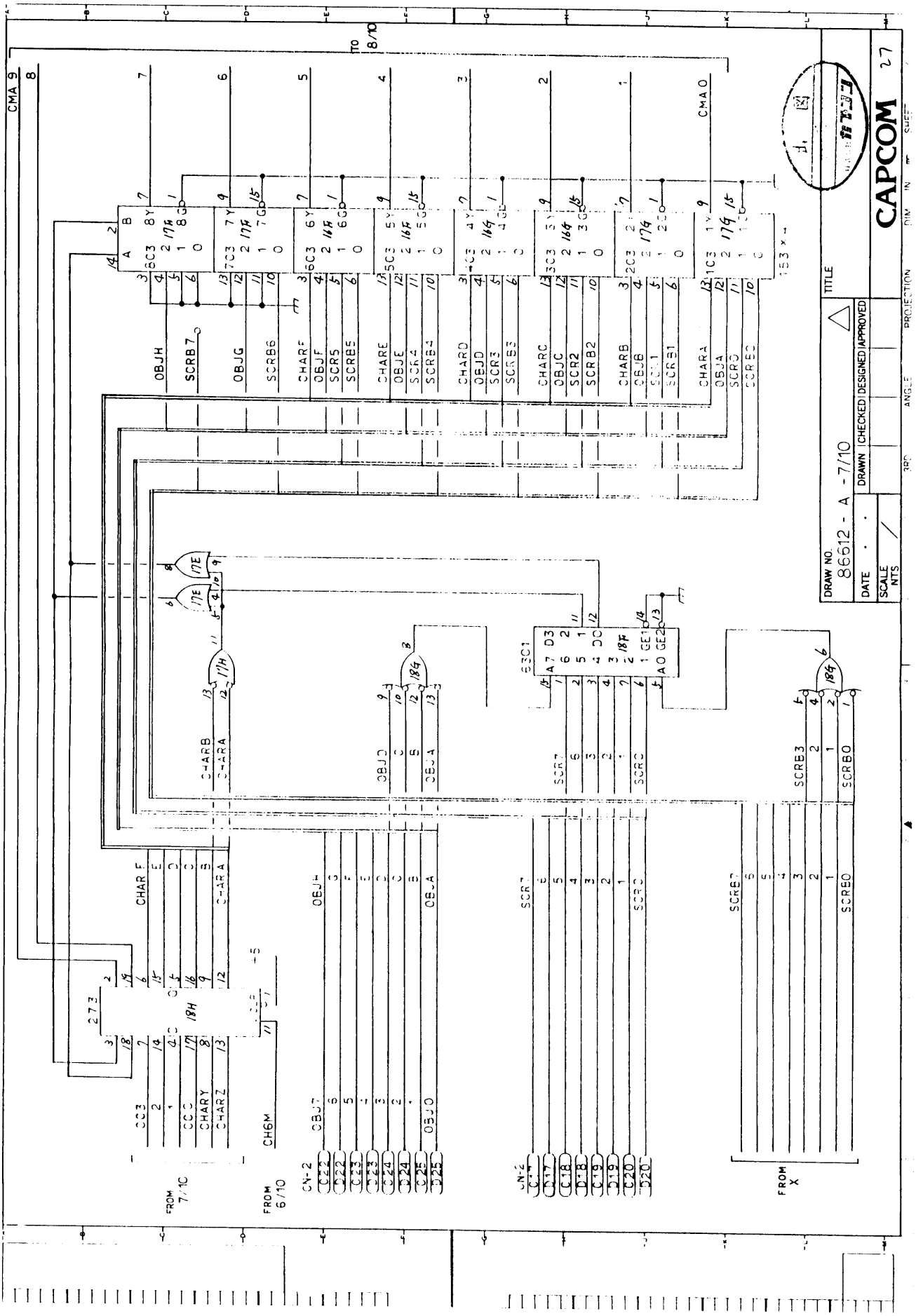
CAPCOM
27
DRAW NO.
86612 - A - 7/10
DATE
SCALE
NTS
DRAWN
CHECKED
DESIGNED
APPROVED
TITLE
TO 8/10
FROM 7/10
FROM 6/10
FROM X
CN-2
CMA 9
CMA 0

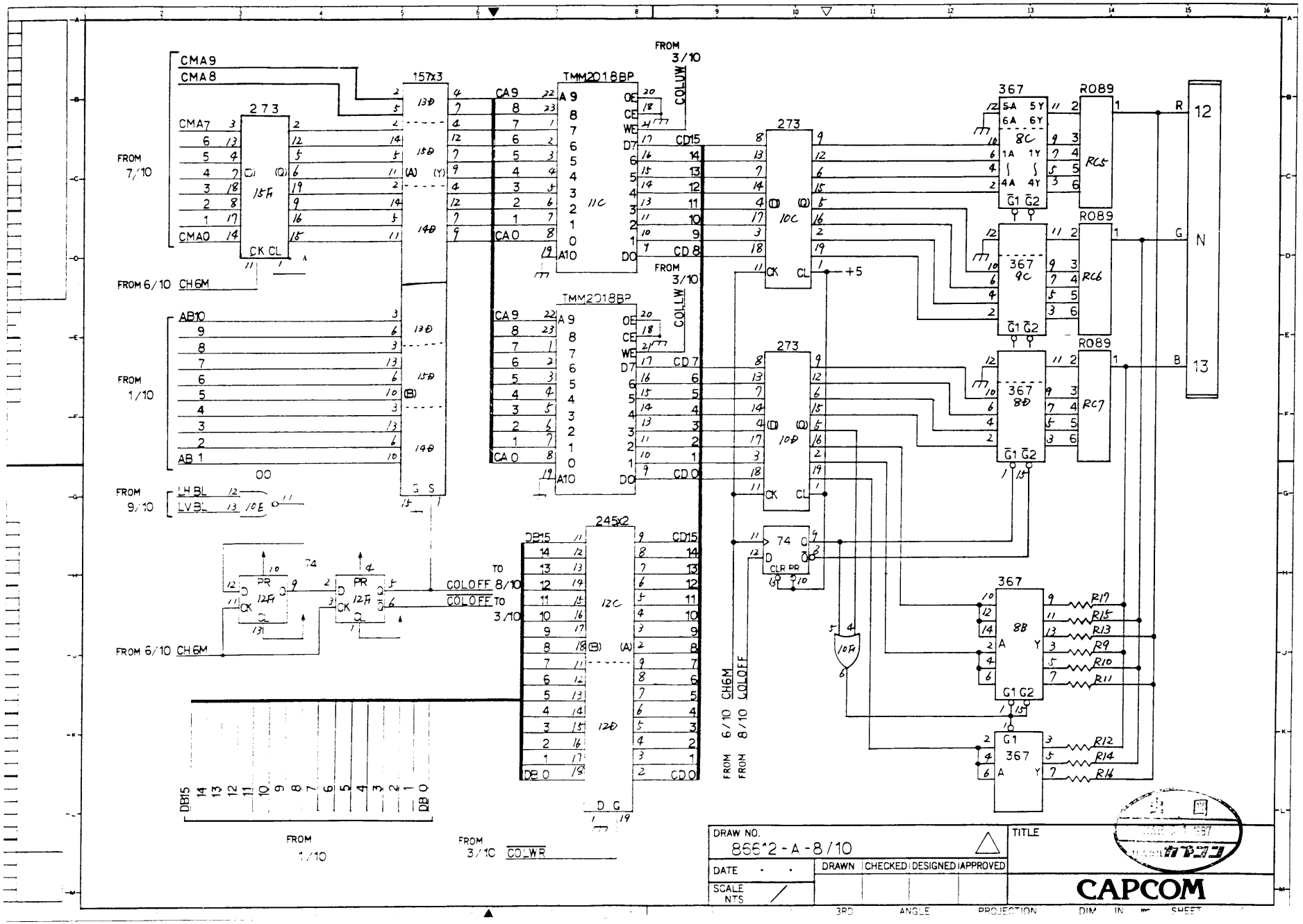
CMA9
CMA8
CMA7
CMA0
273
15F
CK CL
157x3
13D
15D
14D
FROM 7/10
FROM 6/10 CH6M
AB10
AB 1
FROM 1/10
00
FROM 9/10
LH BL
LV BL
10E
74
12F
TO 8/10 COLOFF
TO 3/10 COLOFF
FROM 6/10 CH6M
TMM2018BP
11C
CA9
CA0
FROM 3/10 COLUW
FROM 3/10 COLLW
CD15
CD8
CD7
CD0
+5
245X2
12C
12D
DB15
DB 0
FROM 1/10
FROM 3/10 COLWR
10C
10D
10F
367
8C
9C
8D
8B
RC5
RC6
RC7
R089
R19
R15
R13
R9
R10
R11
R12
R14
R16
FROM 6/10 CH6M
FROM 8/10 COLOFF
R
G
B
12
N
13
DRAW NO.
86612-A-8/10
TITLE
DATE
SCALE NTS
DRAWN
CHECKED
DESIGNED
APPROVED
CAPCOM
3RD ANGLE PROJECTION
DIM IN SHEET

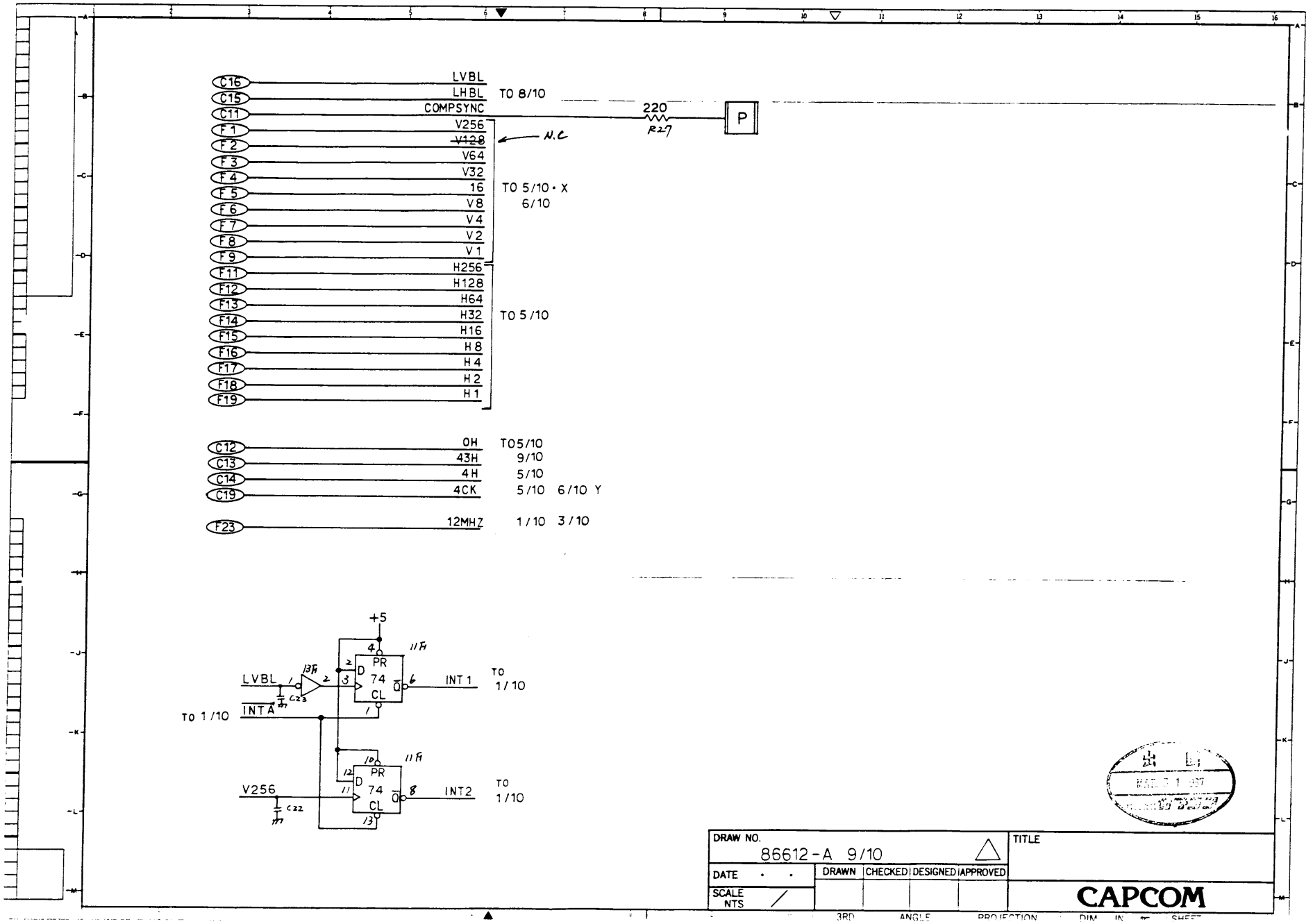
C16 LVBL
C15 LHBL TO 8/10
C11 COMPSYNC
220
R27
P
F1 V256
F2 V128
N.C
F3 V64
F4 V32
F5 16 TO 5/10 • X
F6 V8 6/10
F7 V4
F8 V2
F9 V1
F11 H256
F12 H128
F13 H64
F14 H32 TO 5/10
F15 H16
F16 H8
F17 H4
F18 H2
F19 H1
C12 0H TO5/10
C13 43H 9/10
C14 4H 5/10
C19 4CK 5/10 6/10 Y
F23 12MHZ 1/10 3/10
+5
LVBL
INTA
TO 1/10
PR
D
74
CL
INT1
TO 1/10
V256
INT2
TO 1/10
C23
C22
DRAW NO.
86612-A 9/10
TITLE
DATE
SCALE NTS
DRAWN
CHECKED
DESIGNED
APPROVED
CAPCOM
3RD ANGLE PROJECTION

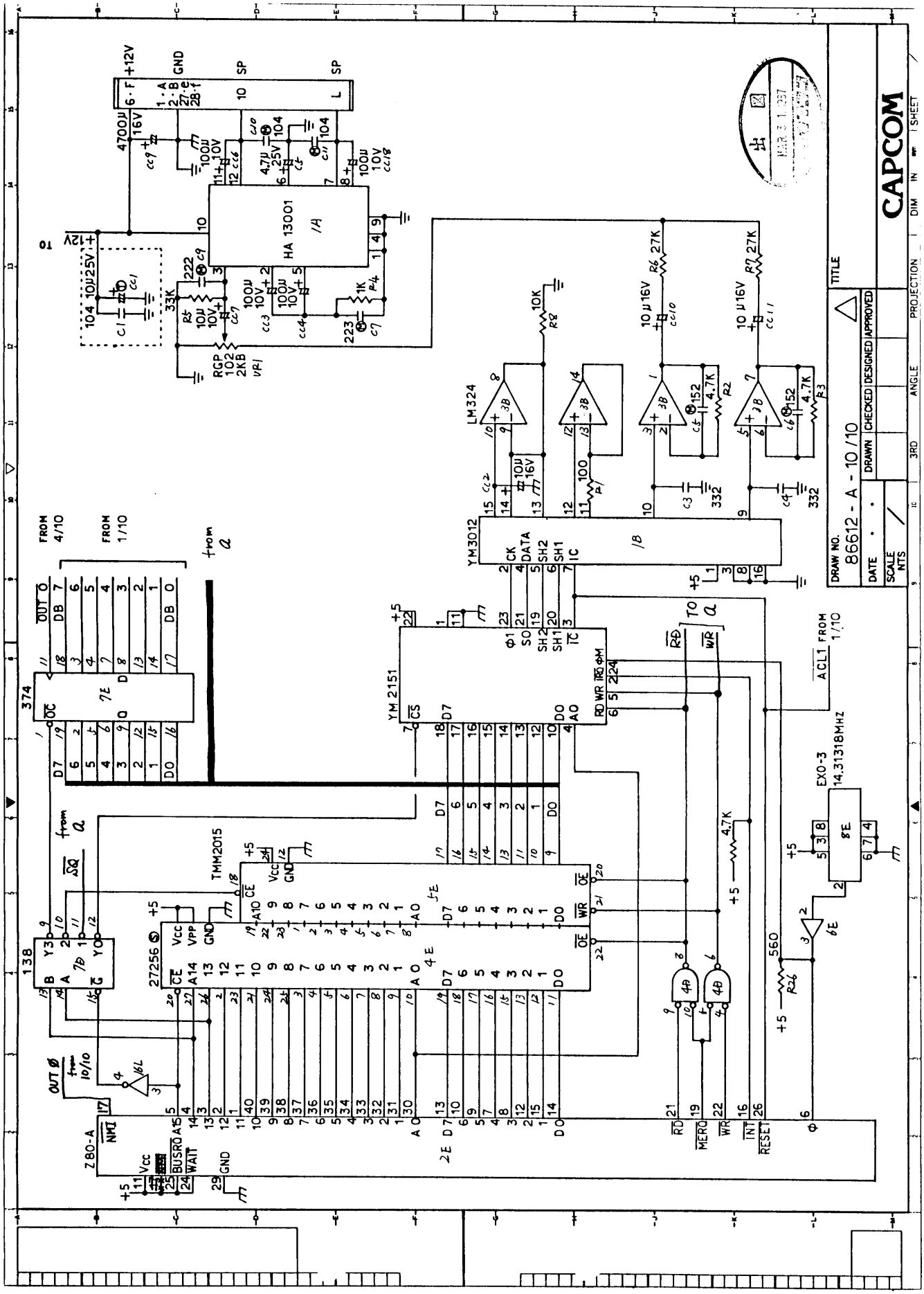
CAPCOM
DRAW NO.
86612 - A - 10/10
DATE
SCALE NTS
DRAWN
CHECKED
DESIGNED
APPROVED
TITLE
3RD
ANGLE
PROJECTION
DIM IN
SHEET
HA 13001
LM324
YM3012
YM 2151
TMM2015
27256
Z80-A
374
138
EXO-3
14.31318MHz
ACL1 FROM 1/10
FROM 4/10
FROM 1/10
RGP 102 2KB
+12V
GND
SP
+5
TO a
from a
OUT Ø from 10/10

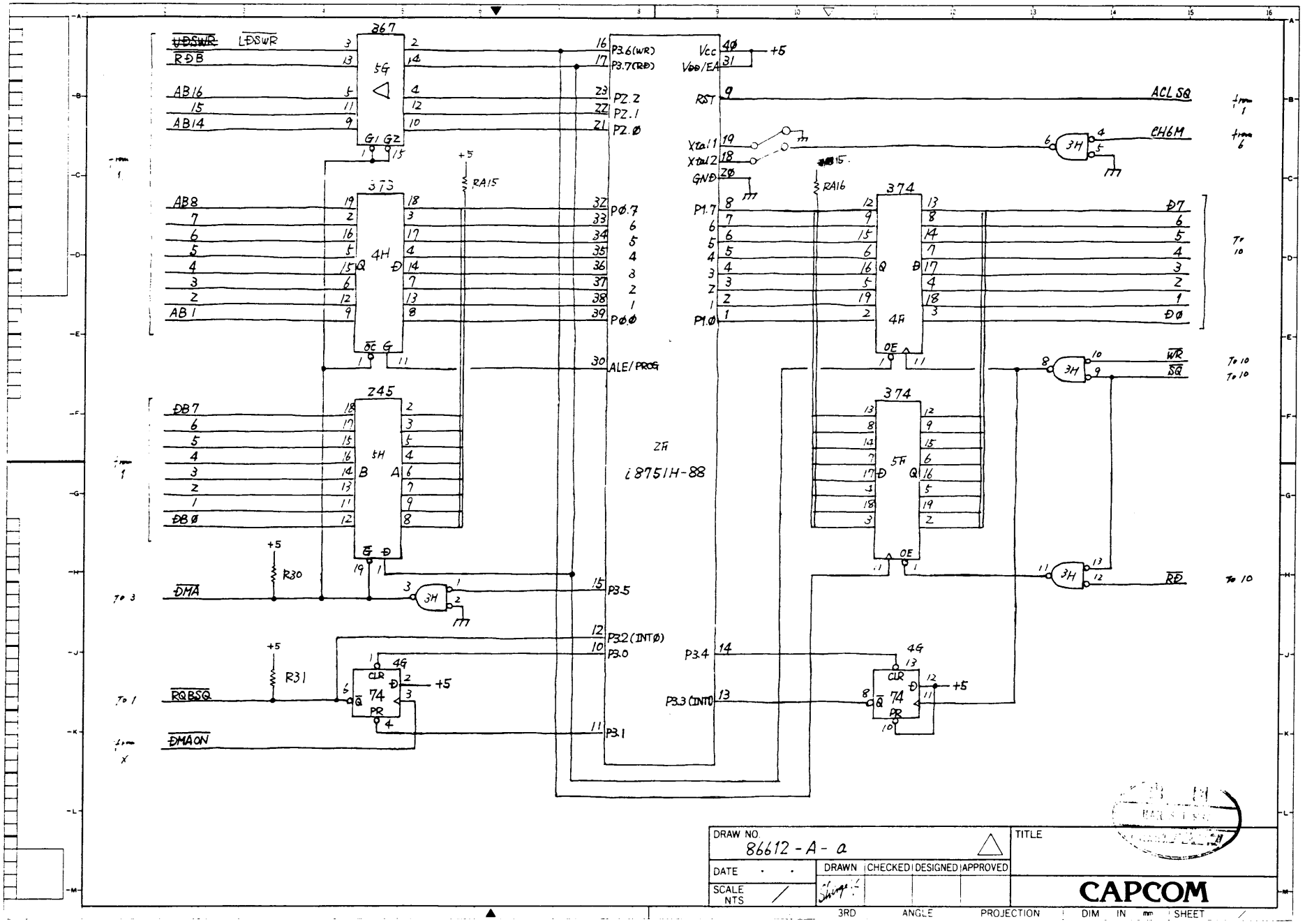

367
5G
373
4H
245
5H
374
4F
374
5F
2F
i8751H-88
74
4G
3H
LDSWR
RDB
AB16
AB14
AB8
AB1
DB7
DB0
DMA
RQBSQ
DMAON
P3.6(WR)
P3.7(RD)
P2.2
P2.1
P2.0
P0.7
P0.0
ALE/PROG
P3.5
P3.2(INT0)
P3.0
P3.1
P3.4
P3.3(INT1)
Vcc
VDD/EA
RST
Xtal1
Xtal2
GND
P1.7
P1.0
RA15
RA16
R30
R31
ACL SQ
CH6M
D7
D0
WR
SQ
RD
DRAW NO.
86612 - A - a
TITLE
DATE
SCALE NTS
DRAWN
CHECKED
DESIGNED
APPROVED
CAPCOM
3RD
ANGLE
PROJECTION
DIM IN mm
SHEET

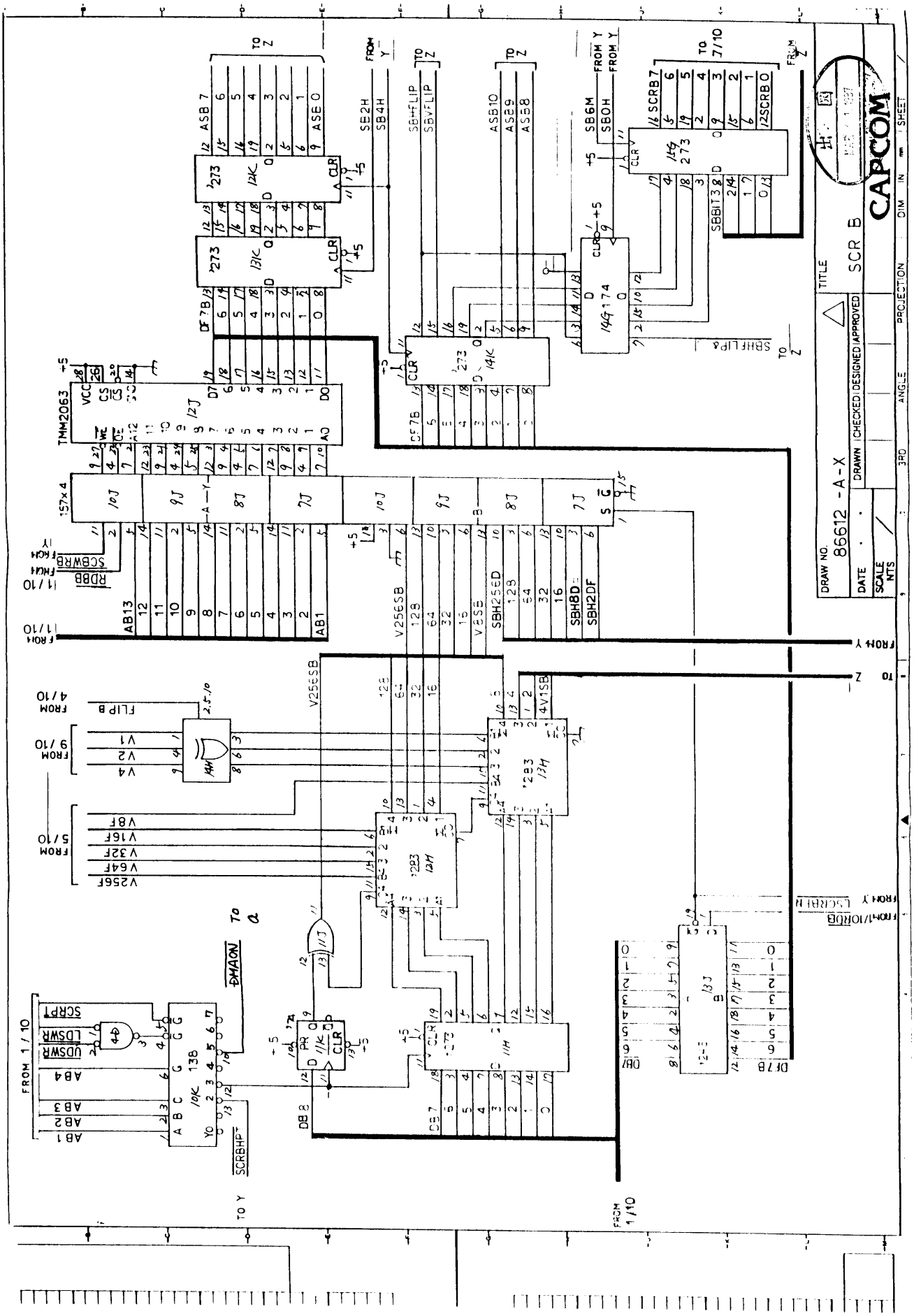
CAPCOM
SCR B
86612 -A-X
DRAW NO.
DATE
SCALE NTS
DRAWN
CHECKED
DESIGNED
APPROVED
TITLE
TMM2063
157x4
DMAON
SCRBHPT
SCRPT
LDSWR
UDSWR
FROM 1/10
FROM 4/10
FROM 9/10
FROM 5/10
FROM Y
TO Z
TO Y
FROM 1/10
FROM 1/10RDB
FROM Y
LSCRBEN
SBHFLIP
SBVFLIP
SBH256D
SBH8D
SBH2DF
V256SB
V8SB
AB13
AB1
AB2
AB3
AB4
DB8
DB7
DF7B
SBBIT3
SCRB7
SCRB0
SB6M
SB0H
SB2H
SB4H
ASB10
ASB9
ASB8
ASB7
ASB0
FLIP B
V1
V2
V4
V8F
V16F
V32F
V64F
V256F
4V1SB
DF7B
DB7

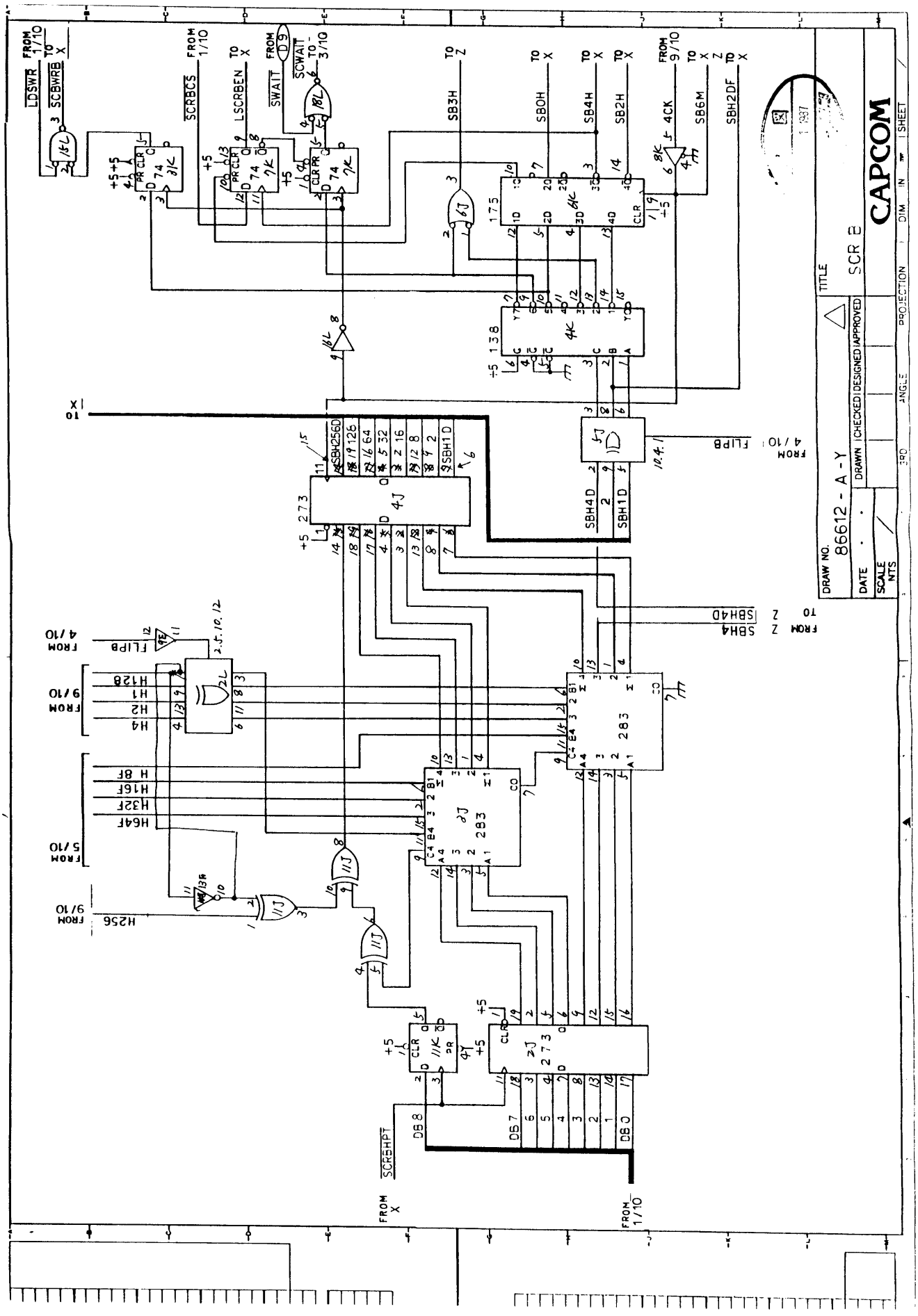
CAPCOM
SCR B
DRAW NO.
86612 - A - Y
DATE
SCALE
NTS
DRAWN
CHECKED
DESIGNED
APPROVED
TITLE
PROJECTION
DIM IN
SHEET
LDSWR
SCBWRB
SCRBCS
LSCRBEN
SWAIT
SCWAIT
SB3H
SB0H
SB4H
SB2H
4CK
SB6M
SBH2DF
SBH256D
SBH1D
SBH4D
SBH4
FLIPB
H128
H1
H2
H4
H8F
H16F
H32F
H64F
H256
SCRBHPT
DB8
DB7
DB0
FROM 1/10
FROM 9/10
FROM 5/10
FROM 4/10
FROM X
TO X
TO Z

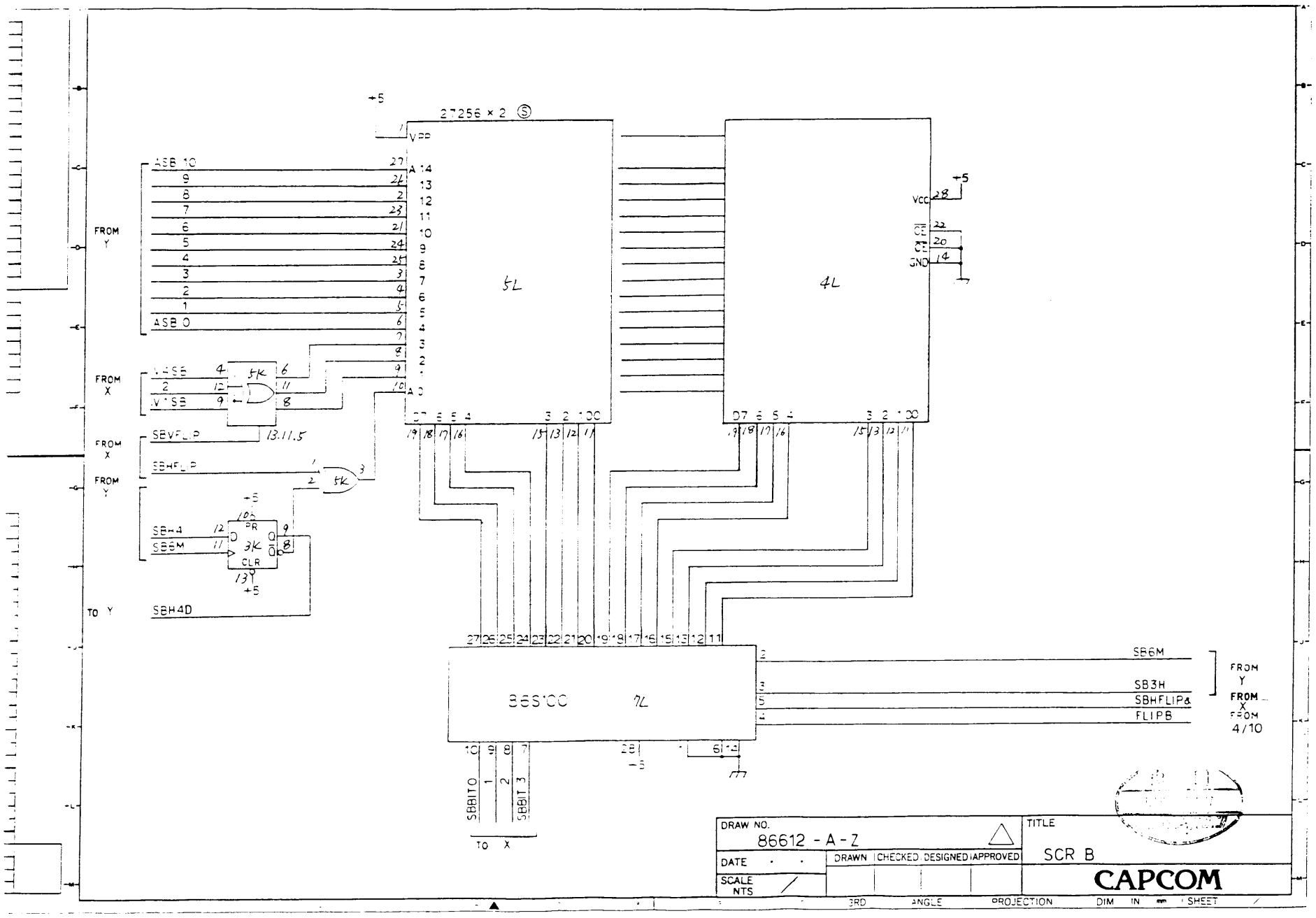
27256 x 2
5L
4L
8S'00
7L
FROM Y
FROM X
ASB 10
ASB 0
SBVFLIP
SBHFLIP
13.11.5
SBH4
SB6M
SBH4D
TO Y
SBBIT0
SBBIT 3
TO X
SB6M
SB3H
SBHFLIPa
FLIPB
FROM Y
FROM X
4/10
DRAW NO.
86612 - A - Z
DATE
SCALE NTS
DRAWN
CHECKED
DESIGNED
APPROVED
TITLE
SCR B
CAPCOM
3RD ANGLE PROJECTION
DIM IN mm
SHEET

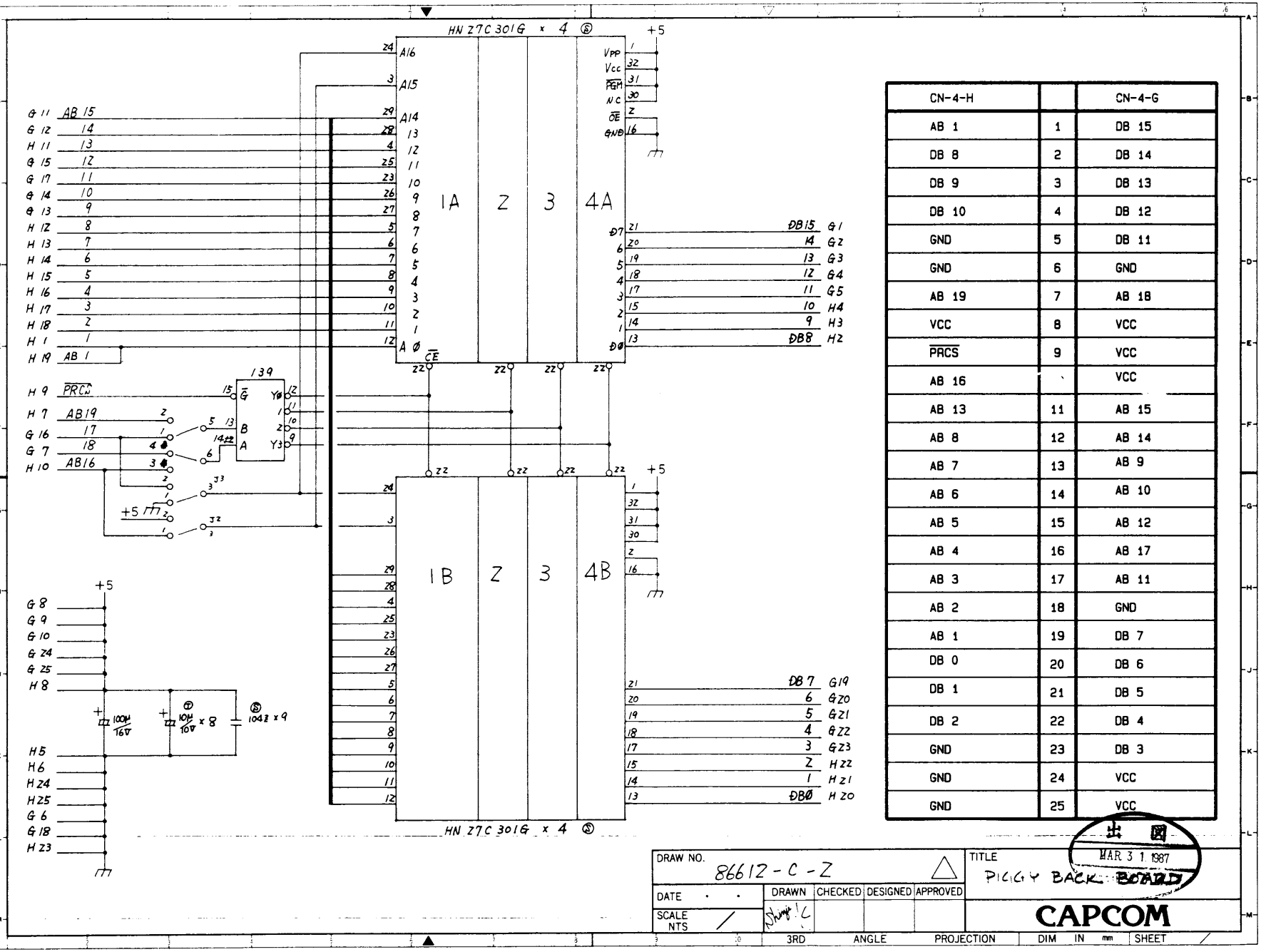

CN-4-H		CN-4-G
AB 1	1	DB 15
DB 8	2	DB 14
DB 9	3	DB 13
DB 10	4	DB 12
GND	5	DB 11
GND	6	GND
AB 19	7	AB 18
VCC	8	VCC
$\overline{PRCS}$	9	VCC
AB 16		VCC
AB 13	11	AB 15
AB 8	12	AB 14
AB 7	13	AB 9
AB 6	14	AB 10
AB 5	15	AB 12
AB 4	16	AB 17
AB 3	17	AB 11
AB 2	18	GND
AB 1	19	DB 7
DB 0	20	DB 6
DB 1	21	DB 5
DB 2	22	DB 4
GND	23	DB 3
GND	24	VCC
GND	25	VCC

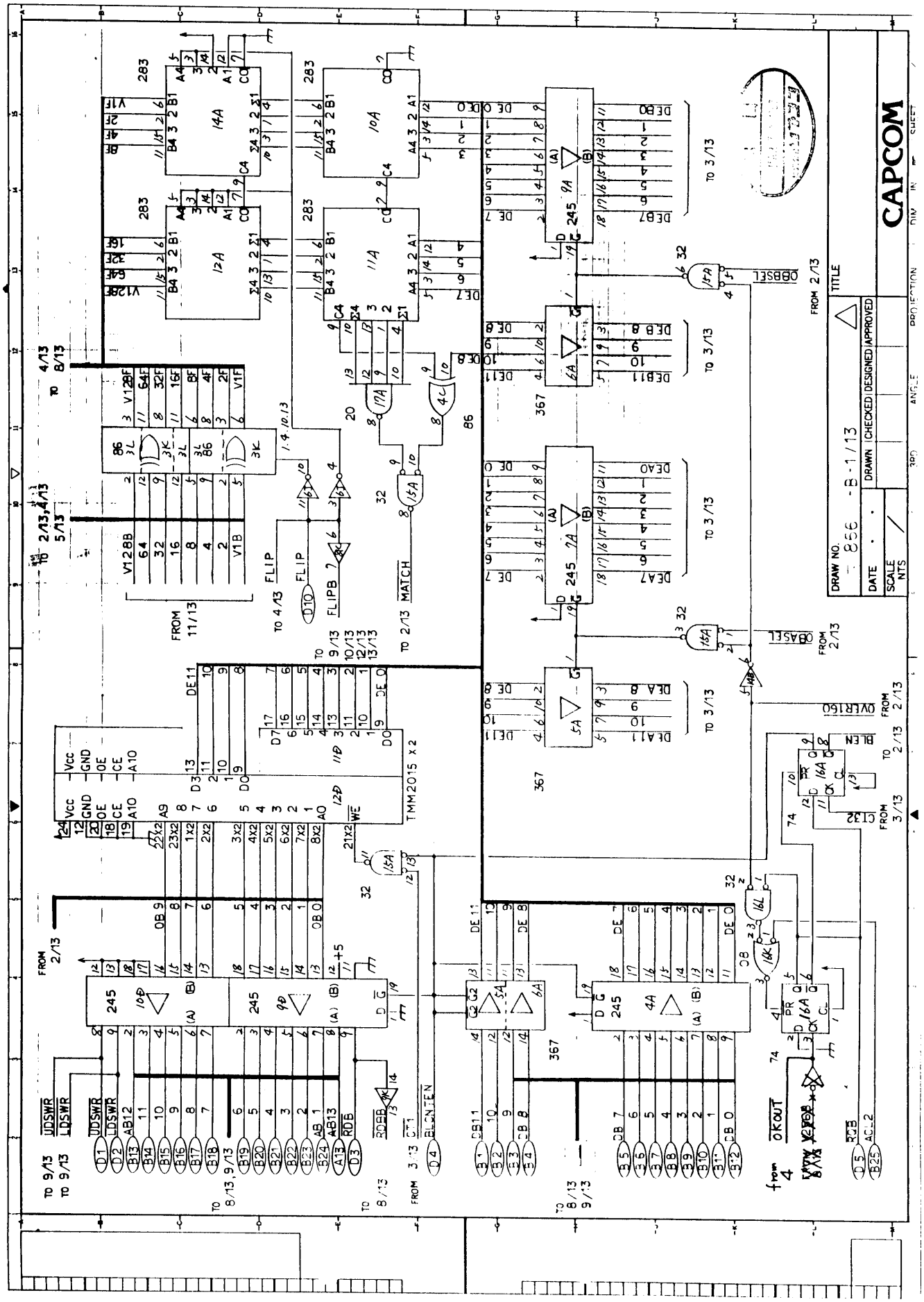
CAPCOM
DRAW NO.
DATE
SCALE NTS
DRAWN
CHECKED
DESIGNED
APPROVED
TITLE
TMM2015 x2
FLIP
FLIPB
MATCH
OBSEL
OBASEL
OVER160
BLEN
OKOUT
BLONTEN
FROM 11/13
FROM 2/13
FROM 3/13
TO 3/13
TO 4/13
TO 2/13
TO 9/13
TO 8/13
TO 2/13,4/13
5/13
TO 4/13
8/13
FROM 2/13
FROM 3/13
FROM 4

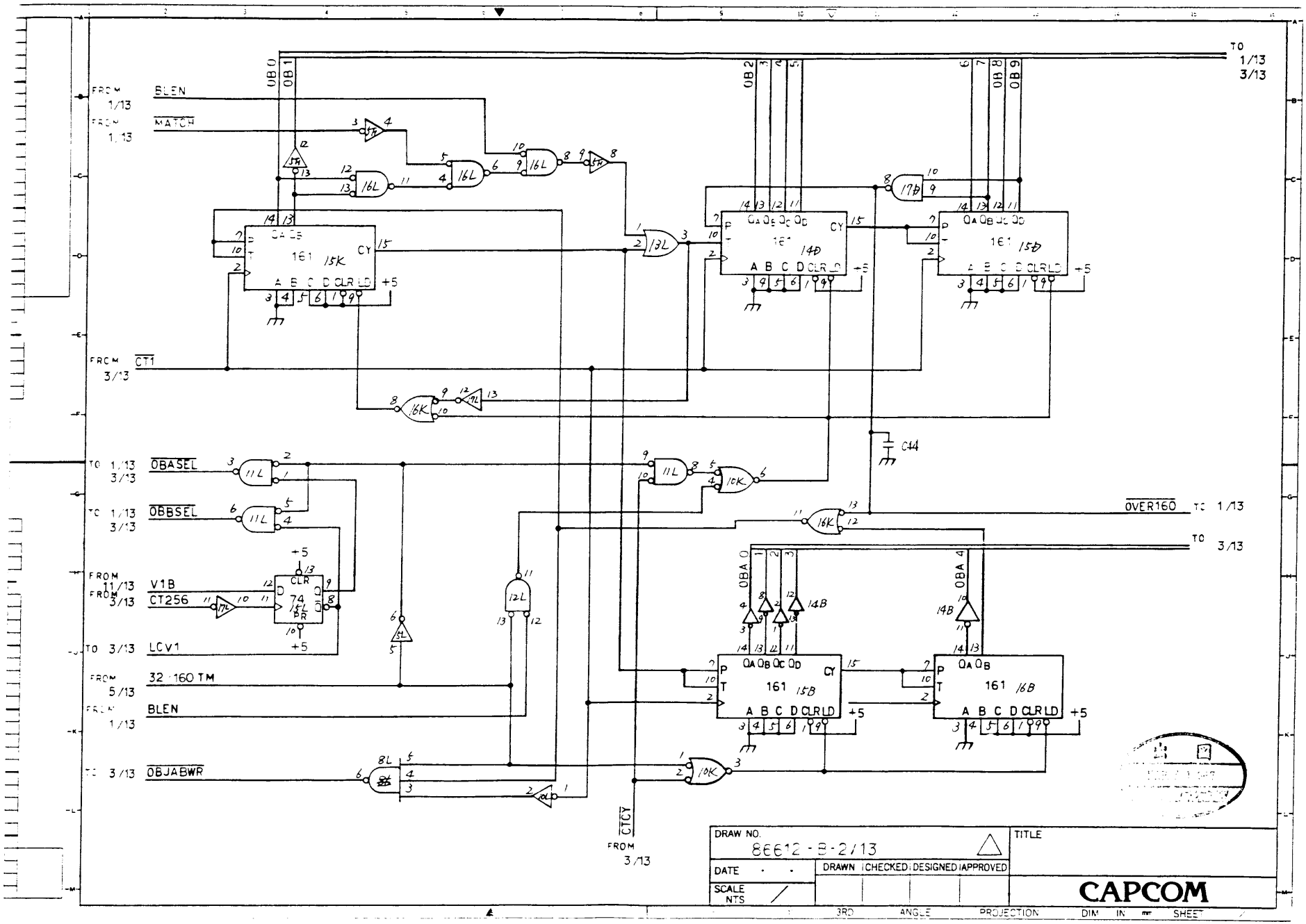
TO 1/13 3/13
FROM 1/13 BLEN
FROM 1/13 MATCH
OB0
OB1
OB2
OB8
OB9
161 15K
161 14D
161 15D
FROM 3/13 CT1
OBASEL
OBBSEL
TO 1/13 3/13
FROM 11/13 V1B
FROM 3/13 CT256
74 15L BR
TO 3/13 LCV1
FROM 5/13 32:160 TM
FROM 1/13 BLEN
TO 3/13 OBJABWR
C44
OVER160 TO 1/13
TO 3/13
OBA0
OBA4
161 15B
161 16B
CTCY FROM 3/13
DRAW NO. 86612-B-2/13
DATE
SCALE NTS
DRAWN CHECKED DESIGNED APPROVED
TITLE
CAPCOM
3RD ANGLE PROJECTION DIM IN mm SHEET

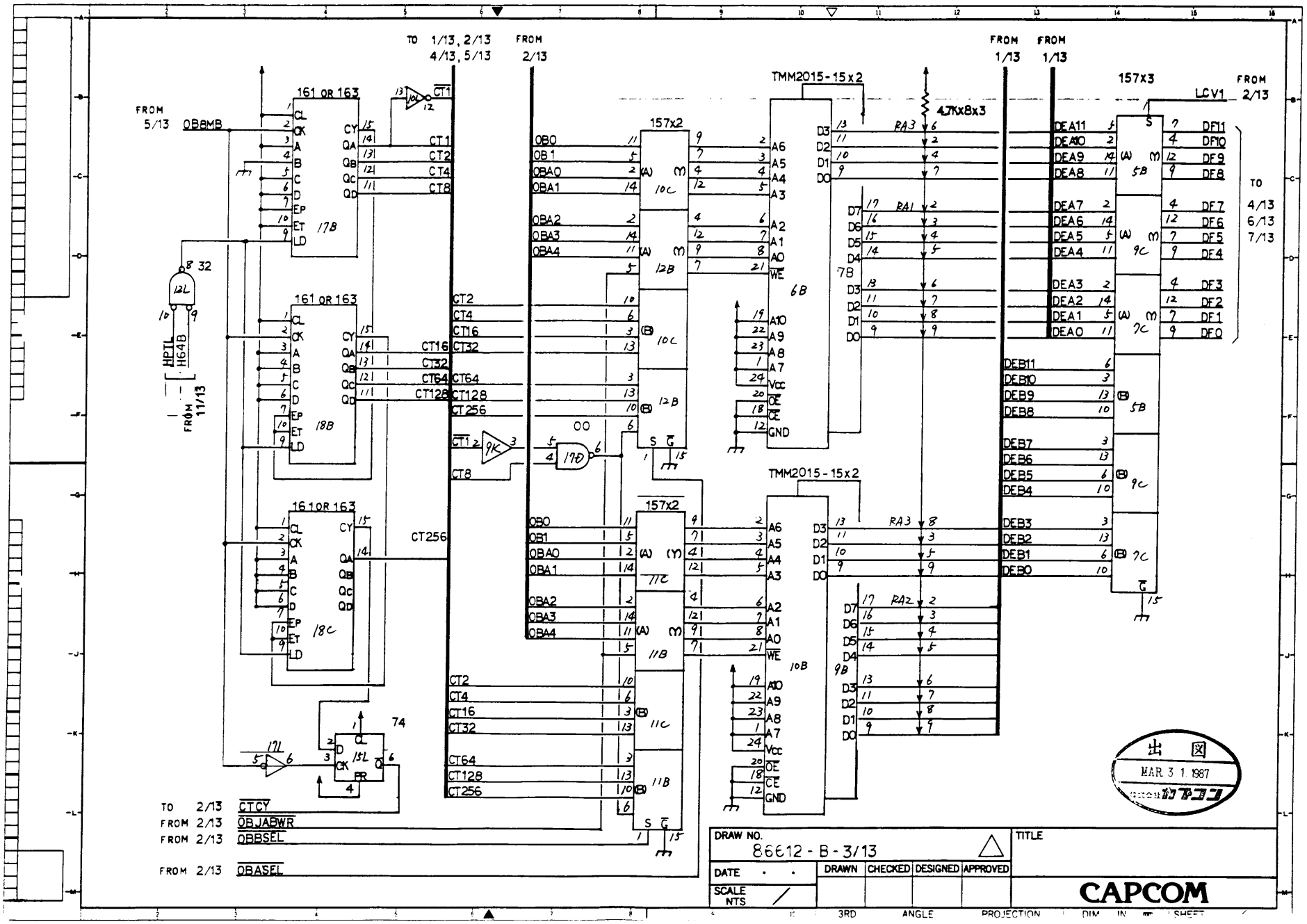

TO 1/13, 2/13 4/13, 5/13
FROM 2/13
FROM 1/13
FROM 1/13
FROM 5/13 OB8MB
161 OR 163
157x2
TMM2015-15x2
4.7Kx8x3
157x3
LCV1
FROM 2/13
TO 4/13 6/13 7/13
HPTL H64B
FROM 11/13
TO 2/13 CTCY
FROM 2/13 OBJABWR
FROM 2/13 OBBSEL
FROM 2/13 OBASEL
出図
MAR 3 1 1987
DRAW NO. 86612-B-3/13
TITLE
DATE
DRAWN
CHECKED
DESIGNED
APPROVED
SCALE NTS
CAPCOM
3RD ANGLE PROJECTION DIM IN SHEET

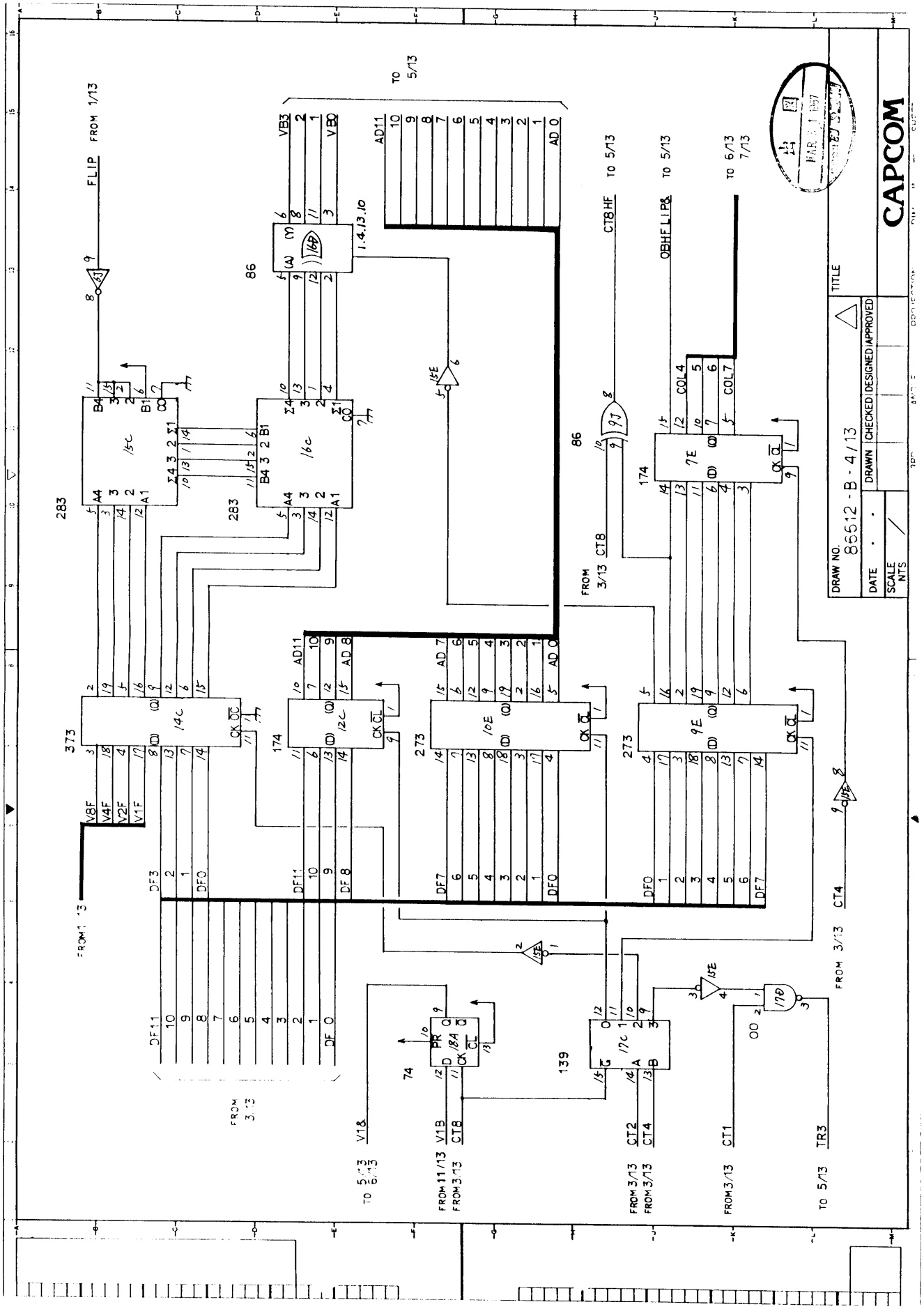
CAPCOM
DRAW NO. 86512 - B - 4/13
DATE
SCALE NTS
DRAWN
CHECKED
DESIGNED
APPROVED
TITLE
FLIP FROM 1/13
TO 5/13
CT8HF TO 5/13
OBHFLIP& TO 5/13
TO 6/13 7/13
FROM 3/13 CT8
FROM 3/13 CT4
FROM 1/13
FROM 3/13
TO 5/13 6/13
FROM 11/13 FROM 3/13
FROM 3/13 FROM 3/13
FROM 3/13
TO 5/13
283
373
174
273
86
139
74
1.4.13.10

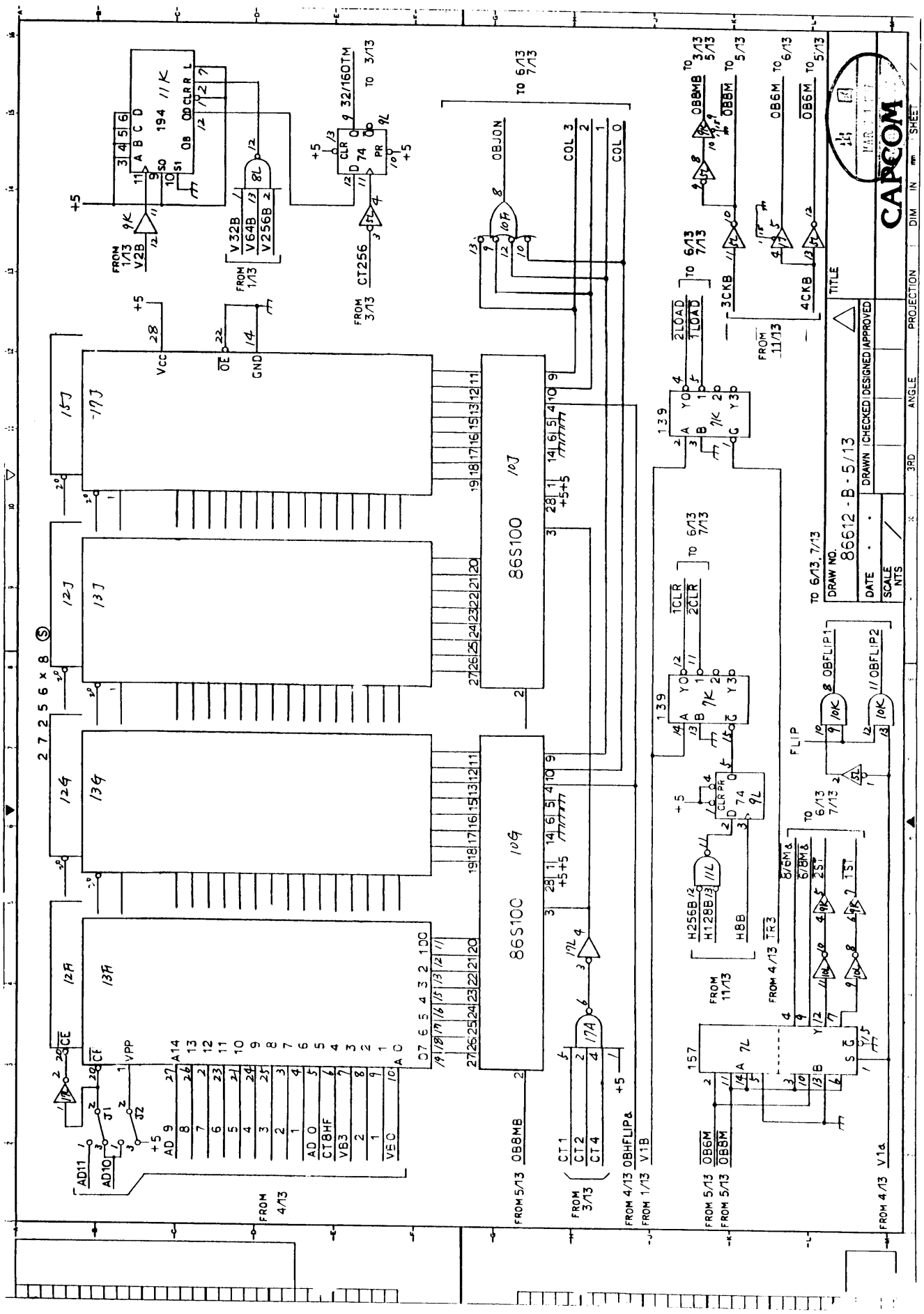
CAPCOM
DRAW NO.
86612 - B - 5/13
DATE
SCALE
NTS
DRAWN
CHECKED
DESIGNED
APPROVED
TITLE
3RD
ANGLE
PROJECTION
DIM
IN
mm
SHEET
86S100
86S100
194
74
139
157
32/160TM
CT256
OBJON
COL 3
COL 0
OBBMB
OB6M
3CKB
4CKB
2LOAD
1LOAD
1CLR
2CLR
OBFLIP1
OBFLIP2
FLIP
H256B
H128B
H8B
TR3
OBHFLIP
V1B
V1a
AD11
AD10
AD 9
AD 0
CT8HF
VB3
VB0
CT1
CT2
CT4
FROM 4/13
FROM 5/13
FROM 3/13
FROM 1/13
FROM 11/13
FROM 4/13
TO 6/13, 7/13
TO 6/13 7/13
TO 3/13 5/13
TO 5/13
TO 6/13
TO 5/13
FROM 1/13
FROM 3/13
FROM 4/13
FROM 5/13
FROM 5/13
FROM 4/13
+5
+5+5
Vcc
OE
GND
2 7 2 5 6 x 8

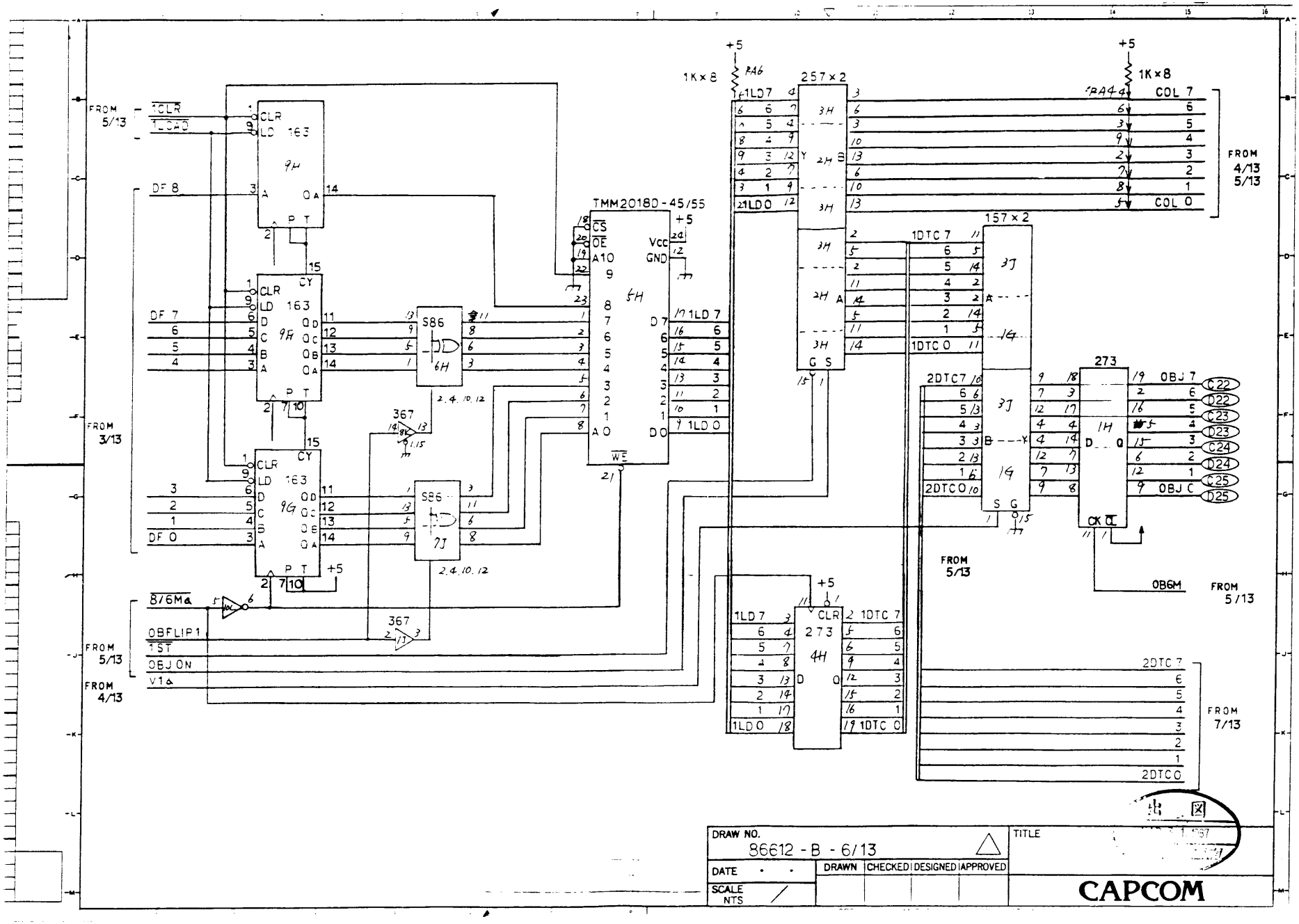
FROM 5/13
1CLR
1LOAD
DF 8
DF 7
DF 0
FROM 3/13
8/6Ma
OBFLIP1
1ST
OBJ ON
V1a
FROM 5/13
FROM 4/13
163
9H
9G
S86
6H
7J
367
TMM2018D-45/55
5H
1K×8
RA6
257×2
3H
2H
157×2
3J
1G
273
1H
4H
1LD 7
1LD 0
1DTC 7
1DTC 0
2DTC 7
2DTC 0
COL 7
COL 0
FROM 4/13 5/13
OBJ 7
OBJ 0
C22
D22
C23
D23
C24
D24
C25
D25
OB6M
FROM 5/13
FROM 7/13
DRAW NO.
86612 - B - 6/13
TITLE
DATE
DRAWN
CHECKED
DESIGNED
APPROVED
SCALE
NTS
CAPCOM

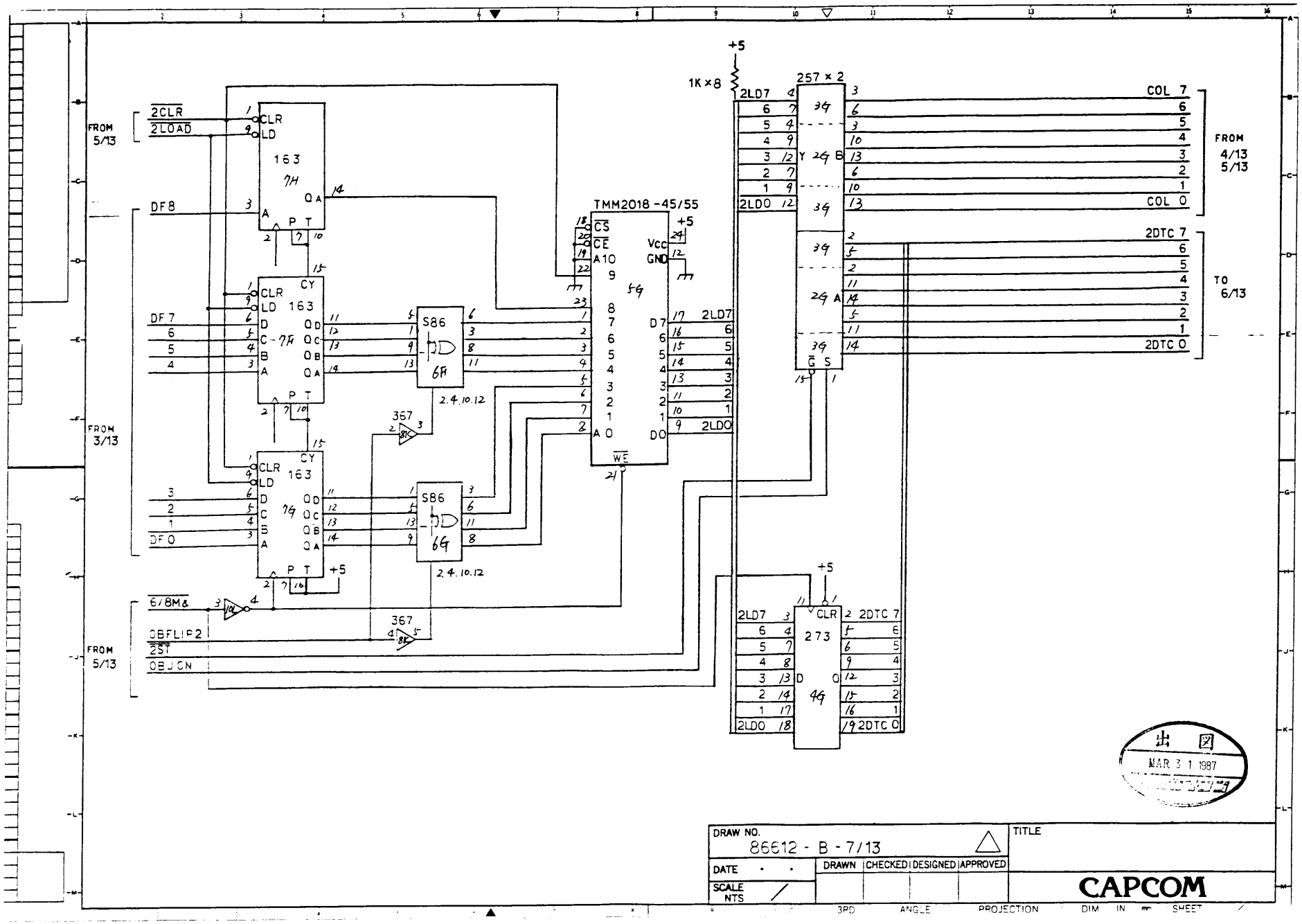

出 図
MAR 3 1 1987

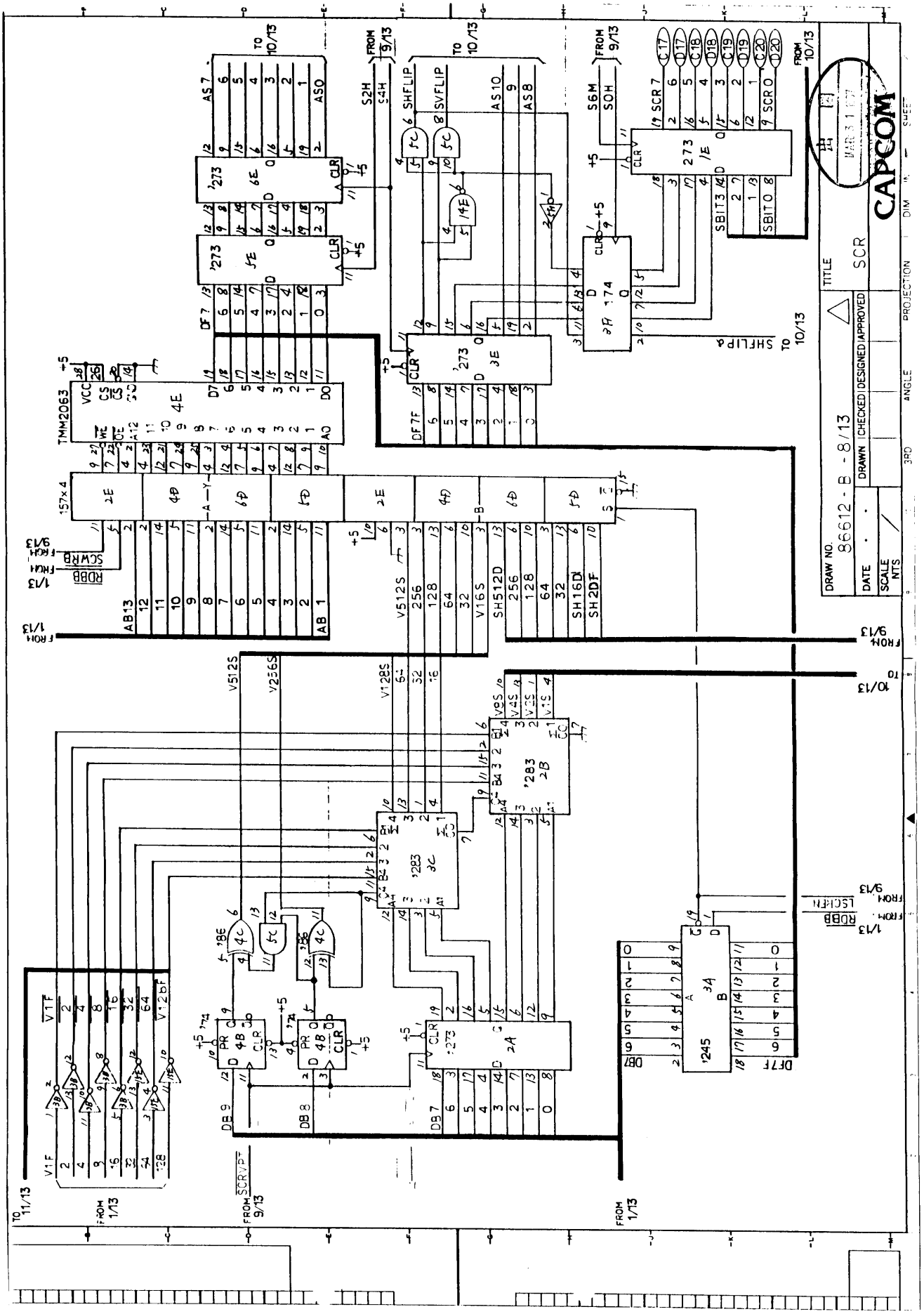
CAPCOM
DRAW NO. 86612 - B - 8/13
TITLE SCR
DRAWN
CHECKED
DESIGNED
APPROVED
DATE
SCALE NTS
3RD
ANGLE
PROJECTION
DIM
SHEET
TMM2063
157x4
SHFLIP
SVFLIP
SCR 7
SCR 0
SBIT3
SBIT0
SCWRB
RDBB
LSCKEN
SCRVPT
FROM 9/13
FROM 10/13
FROM 1/13
TO 10/13
TO 11/13

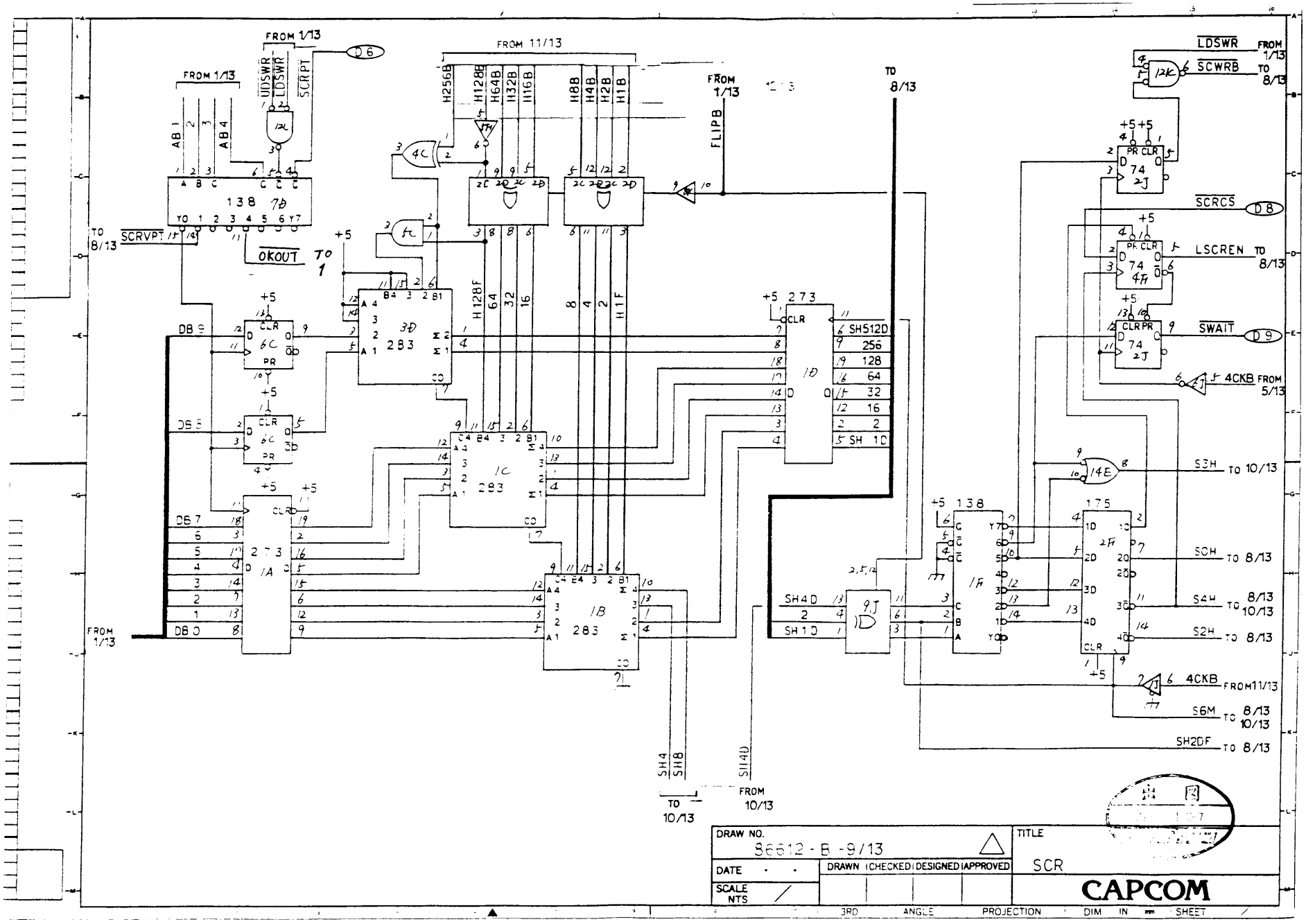
FROM 1/13
FROM 11/13
FROM 12/13
TO 8/13
LDSWR
SCWRB
SCRCS
LSCREN
SWAIT
4CKB FROM 5/13
S3H TO 10/13
SOH TO 8/13
S4H 8/13 10/13
S2H TO 8/13
4CKB FROM11/13
S6M 8/13 10/13
SH2DF TO 8/13
SCRVPT
OKOUT TO 1
FLIPB
H256B
H128B
H64B
H32B
H16B
H8B
H4B
H2B
H1B
H128F
H1F
DB 9
DB 8
DB 7
DB 6
DB 5
DB 4
DB 3
DB 2
DB 1
DB 0
SH512D
SH256
SH128
SH64
SH32
SH16
SH8
SH4
SH2
SH1D
SH4D
SH1D
SH4 SH8
SH4D
FROM 10/13
TO 10/13
DRAW NO. 86612-B-9/13
DATE
SCALE NTS
DRAWN CHECKED DESIGNED APPROVED
TITLE SCR
CAPCOM
3RD ANGLE PROJECTION DIM IN mm SHEET

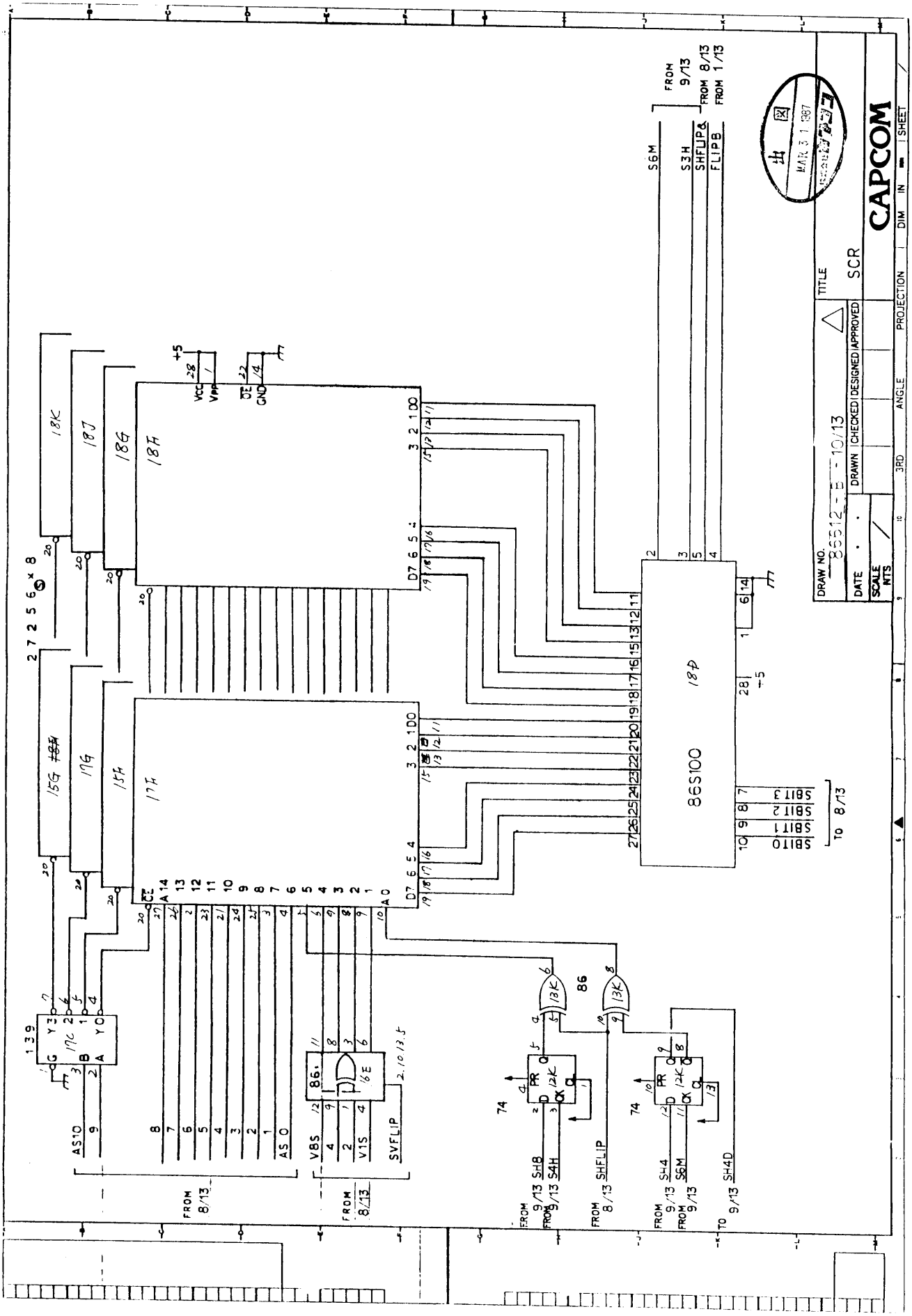
CAPCOM
SCR
TITLE
DRAW NO.
DATE
SCALE NTS
DRAWN
CHECKED
DESIGNED
APPROVED
3RD
ANGLE
PROJECTION
DIM
IN
SHEET
86S100
18D
18H
18J
18K
17F
17G
15F
15G
17C
139
86
74
S6M
S3H
SHFLIP&
FLIPB
FROM 9/13
FROM 8/13
FROM 1/13
SBIT0
SBIT1
SBIT2
SBIT3
TO 8/13
AS10
AS0
V8S
V1S
SVFLIP
SH8
S4H
SHFLIP
SH4
S6M
SH4D
FROM 8/13
FROM 9/13
TO 9/13
VCC
VPP
OE
GND
+5

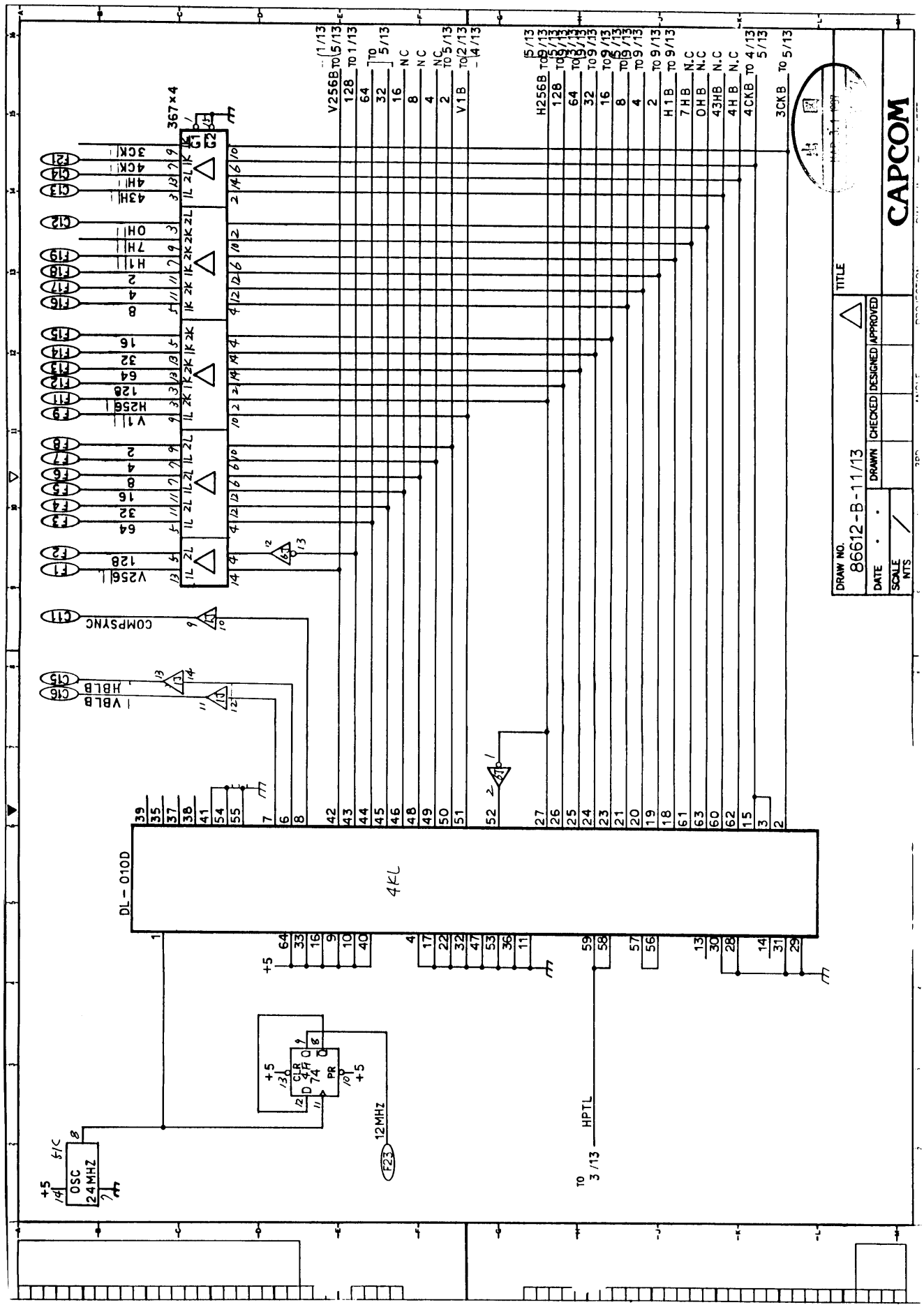
CAPCOM
DRAW NO.
86612-B-11/13
DATE
SCALE
NTS
DRAWN
CHECKED
DESIGNED
APPROVED
TITLE
DL-010D
4KL
367×4
COMPSYNC
HBLB
VBLB
OSC
24MHZ
12MHZ
HPTL
TO 3/13
V256B
H256B
V1B
H1B
7HB
OHB
43HB
4HB
4CKB
3CKB

P100

CN-1-A		CN-1-B
GND	1	DB 11
GND	2	DB 10
GND	3	DB 9
GND	4	DB 8
GND	5	DB 7
GND	6	DB 6
GND	7	DB 5
GND	8	DB 4
GND	9	DB 3
GND	10	DB 2
GND	11	DB 1
GND	12	DB 0
AB 13	13	AB 12
VCC	14	AB 11
VCC	15	AB 10
VCC	16	AB 9
VCC	17	AB 8
VCC	18	AB 7
VCC	19	AB 6
VCC	20	AB 5
VCC	21	AB 4
VCC	22	AB 3
VCC	23	AB 2
VCC	24	AB 1
VCC	25	ACL 2

P2000

CN-2-C		CN-2-D
GND	1	$\overline{\text{UDSWA}}$
GND	2	$\overline{\text{LDSWA}}$
GND	3	$\overline{\text{RDB}}$
GND	4	$\overline{\text{BLCNTEN}}$
GND	5	$\overline{\text{RGB}}$
GND	6	$\overline{\text{SCRPT}}$
GND	7	N.C
GND	8	$\overline{\text{SCRCS}}$
GND	9	$\overline{\text{SWAIT}}$
GND	10	FLIP
COMPSYNC	11	GND
0H	12	GND
43H	13	GND
4H	14	GND
HBLB	15	GND
VBLB	16	GND
SCR 7	17	SCR 6
SCR 5	18	SCR 4
SCR 3	19	SCR 2
SCR 1	20	SCR 0
GND	21	GND
OBJ 7	22	OBJ 6
OBJ 5	23	OBJ 4
OBJ 3	24	OBJ 2
OBJ 1	25	OBJ 0

P3000

CN-3-E		CN-3-F
VCC	1	V 256
VCC	2	V 128
VCC	3	V 64
VCC	4	V 32
VCC	5	V 16
VCC	6	V 8
VCC	7	V 4
VCC	8	V 2
VCC	9	V 1
VCC	10	VCC
VCC	11	H 256
VCC	12	H 128
VCC	13	H 64
GND	14	H 32
GND	15	H 16
GND	16	H 8
GND	17	H 4
GND	18	H 2
GND	19	H 1
GND	20	GND
GND	21	4CK
GND	22	GND
GND	23	12MHZ
GND	24	GND
GND	25	HPTL

OCT. 2 2. 1996

DRAW NO.	86612 CN-1.CN-2.CN-3				TITLE 50P FLATCABLE CONNECTOR LIST
DATE	DRAWN	CHECKED	DESIGNED	APPROVED	
SCALE NTS					CAPCOM
3RD ANGLE PROJECTION	DIM IN mm	SHEET			

SOLDER SIDE			PARTS SIDE
GND	A	1	GND
GND	B	2	GND
+5V	C	3	+5V
+5V	D	4	+5V
-5V	E	5	-5V
+12V	F	6	+12V
	H	7	
COIN COUNTER 2	J	8	COIN COUNTER 1
COIN LOCK OUT 2	K	9	COIN LOCK OUT 1
SP (-)	L	10	SP (+)
N.C	M	11	N.C
VIDEO GREEN	N	12	VIDEO RED
VIDEO SYNC	P	13	VIDEO BLUE
SERVICE SW	R	14	VIDEO GND
TILT SW	S	15	TEST SW
COIN SW 2	T	16	COIN SW 1
START SW 2	U	17	START SW 1
2P UP	V	18	1P UP
2P DOWN	W	19	1P DOWN
2P LEFT	X	20	1P LEFT
2P RIGHT	Y	21	1P RIGHT
2P PUSH 1	Z	22	1P PUSH 1
2P PUSH 2	a	23	1P PUSH 2
2P PUSH 3	b	24	1P PUSH 3
N.C	c	25	N.C
N.C	d	26	N.C
GND	e	27	GND
GND	f	28	GND

PARTS NAME

CR7E-560A-3.96E : (HIROSE)
OR
1168-056 -009 : (KEL)



DRAW NO.				TITLE	
DATE	DRAWN	CHECKED	DESIGNED	APPROVED	JAMMA EDGE CONECTOR
SCALE NTS					CAPCOM
3RD ANGLE PROJECTION	DIM IN mm	SHEET			

LIMITED WARRANTY

CAPCOM, USA, INC. ("Seller"), warrants only to the initial purchaser of its products that the items listed below are free from defects in material and workmanship under normal use and service for the warranty periods specified:

A.	Printed circuit boards	(90) days
B.	Television monitor	(30) days

No other parts of Seller's products are warranted.

Warranty periods are effective from the initial date of shipment from Seller to its authorized distributors.

Seller's sole liability shall be, at its option, to repair or replace products which are returned to Seller during the warranty periods specified, provided:

A. Seller is notified promptly upon discovery by buyer that stated products are defective.

B. Such products are properly packaged and then returned, prepaid to Seller's plant.

This warranty does not apply to any parts damaged during shipping or handling, or due to improper installation or usage, or alteration. In no event shall Seller be liable for any anticipated profits, loss of profits, loss of use, incidental or consequenmtial damages or any other losses incurred by the customer in connection with the purchase of a CAPCOM USA, Inc. product.

(WARRANTY DISCLAIMER)

EXCEPT AS SPECIFICALLY PROVIDED IN A WRITTEN CONTRACT BETWEEN SELLER AND PURCHASER, THERE ARE NO OTHER WARRANTIES, EXPRESSED OR IMPLIED, INCLUDING ANY IMPLIED WARRANTIES OF MERCHANTABILITY OR FITNESS FOR A PARTICULAR PURPOSE.

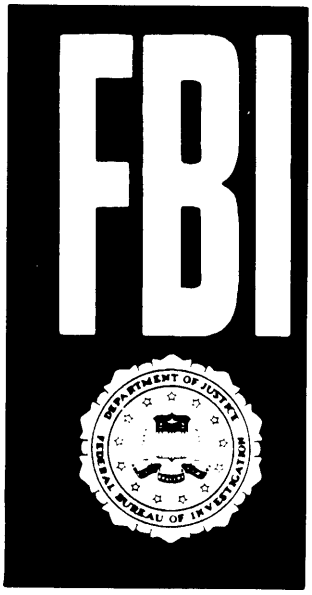

WARNING

Federal law provides severe civil and criminal penalties for the unauthorized reproduction, distribution, or exhibition of copyrighted audiovisual works and video games.

The Federal Bureau of Investigation investigates allegations of criminal copyright infringement.

1238-C Mountain View/Alviso Rd.
Sunnyvale, CA 94089